Original instructions

IC Truck

RCD 25 Plus
RCD 30 Plus
RCD 35 Plus

5227 5228 5229 5321 5322 5323

first in intralogistics

1289 801 1521 EN - 07/2024 - 08

Address of manufacturer and contact details ▷

STILL GmbH
Berzeliusstraße 10
22113 Hamburg, Germany
Telephone: +49 (0) 40 7339-0
Fax: +49 (0) 40 7339-1622
Email: info@still.de
Website: www.still.de

Rules for the operating company of industrial trucks

In addition to these operating instructions, a code of practice containing additional information for the operating companies of industrial trucks is also available.

This guide provides information for handling industrial trucks:

- Information on how to select suitable industrial trucks for a particular area of application
- Prerequisites for the safe operation of industrial trucks
- Information on the use of industrial trucks
- Information on transport, initial commissioning and storage of industrial trucks

Internet address and QR code ▷

The information can be accessed at any time by pasting the address **https://m.still.de/vdma** in a web browser or by scanning the QR code.

Spare parts list

You can request to download the spare parts list by copying and pasting the address **https://sparepartlist.still.eu** into a web browser or by scanning the QR code shown to the side.

On the web page, enter the following password: **Spareparts24!**

On the next screen, enter your email address and truck serial number to receive an email with the link and download the spare parts list.

2511

1 Introduction

Your industrial truck 2
Technical description 2
General 3
Conformity marking 4
Declaration that reflects the content of the declaration of conformity 5
Nameplate 6
Serial number 6

Using the truck 7
Commissioning 7
Intended use 8
Improper use 9
Precautions 10
Description of use and climatic conditions 11
Using working platforms 11

Information about documentation 12
Documentation scope 12
Supplementary documentation 12
Issue date and topicality of the operating instructions 13
Copyright and trademark rights 13
Explanation of signal terms used 14
Date of edition and latest update of this manual 15
List of abbreviations 15
Definition of directions 17
Illustrations 17

Environmental considerations 18
Packaging 18
Disposal of components and batteries 18

2 Safety

Safety guidelines 20

Stability 22

In the case of tip-over 22

Definition of terms used for responsible persons 23
Specialist 23
Operating company 23
Drivers 24

Basic principles for safe operation 26
Insurance cover on company premises 26
Modifications and retrofitting 26
Changes to the overhead guard and roof loads 28
Warning regarding non-original parts 28
Damage, faults 28
Damage, defects and misuse of safety systems 29
Medical devices 29
Tyres 29
Length of the fork arms 30
Exercise caution when handling gas springs and accumulators 31

Residual risks 32
Residual dangers, residual risks 32
Special risks associated with using the truck and attachments 33
Overview of hazards and countermeasures 36
Danger to employees 38

Safety tests 40
Carrying out regular inspections on the truck 40
Insulation testing 40
Checking the diesel engine emissions 41

Safety regulations for handling consumables 42
Permissible consumables 42
Hydraulic fluid 42
Battery acid 42
Oils 43
Diesel fuel 44
Coolant and cooling fluid 46
Brake fluid 46
Disposal of consumables 48

Noise level 48

Frequency characteristics for vibrations imparted to the human body 48

Exhaust gases 49

Heat 50

Radiation 50

Emergency exit for models with rear window 50

Manually lowering the fork arms with ISO 52

Safety guidelines for using the truck 52

Safety regulations when driving . . . 53
Safety regulations in case of accidental lateral tipping . . . 54

3 Overview

General view . . . 56
Controller and display unit . . . 57
Warning Label Diagram . . . 58
Display unit . . . 59
Switch panel . . . 60
Relays and fuses overview . . . 61

4 Operation

Service plan before first start . . . 68
Instructions for running-in . . . 68
Pre-shift checks . . . 69
Daily inspection items . . . 70
Mounting/dismounting . . . 72
Seat belt status and performance checks . . . 73
Checking condition and performance . . . 73
Adjusting the seat and seat belt . . . 73
Seat belt monitoring and alarm function . . . 77
Operating the horn . . . 78
Checking the steering system for correct function . . . 78
Adjusting the steering column . . . 78
Starting the engine . . . 80
Starting the engine . . . 80
Engine shutdown . . . 82
Driving . . . 83
Driving . . . 83
Travelling forwards . . . 83
Travelling backwards . . . 84
Changing the drive direction . . . 84
Inching control . . . 84
Starting on an incline . . . 85
Parking . . . 86

Steering system 86

Brake system 87

Setting the display unit 89

Bonnet — Open - Closed 91

Gas spring with locking function — optional 92

Diesel Particulate Filter Regeneration (For Eu5 Truck) 93

Lifting devices and attachments 100
Operating the lifting device 100
Operating attachments 101

Transporting loads 103
Load centre distance and load capacity 103
Capacity rating plate 103
Additional capacity rating plate 106
Adjusting the fork spacing 107
Picking up a load 108
Transporting pallets 109
Transporting suspended loads 109
Picking up a load 110
Transporting loads 114
Setting down loads 115
Driving on ascending and descending gradients 117
Driving on loading bridges 118
Driving on lifts 119
Tow coupling 119
Leaving the truck temporarily 120
Before exiting the truck 121

Operation in special operating situations 122
Transport 122
Use a truck or flatbed trailer to carry the forklift truck 124
Towing 125
Loading and unloading the truck 127
Lifting eye bolts 127
Lifting the truck with a crane 129

Storing the truck 132
Shutting down and storing the truck 132
Using after storage or decommissioning 133

Disposal of old trucks 135

5 Maintenance

Safety information for inspection and maintenance work 138

General information 139

Common rail engine safety warnings 140

Engine emission requirements (*China IV) 141
List of emission parts and components under warranty (China IV) 141
In-use compliance inspection (*China IV) 141

Inspection and maintenance data 142

Recommended fuels and oils 143

Regular maintenance 145

Service plan (Weichai WP3.2) 146
First service schedule (Weichai WP3.2) 146
500 hour service plan (or at least once every 6 months) 147
1000 hour service plan (or at least once every 1 year) 148
2000 hour service plan (or at least once every 2 year) 150
3000 hour service plan (or at least once every 3 years) 151

Service plan (HYUNDAI/Doosan) 152
First service plan (HYUNDAI/Doosan) 152
500 hour service plan (or at least once every 6 months) 153
1000 hour service plan (or at least once every 1 year) 154
3000 hour service plan (or at least once every 3 years) 156
5000 hour service plan 157

Cleaning the truck 158

Internal combustion engine - Weichai 159
Checking the engine oil level 159
Changing the air filter insert and checking the vacuum switch 159
Cleaning the air filter insert 160
Emptying the fuel filter/water trap 161
Charging the fuel system 163
Checking and cleaning the radiator fins 165
Checking the coolant level 166

Internal combustion engine - HYUNDAI/Doosan 167
Checking the engine oil level 167
Replenishment of Engine Oil 167
Bleeding air from the diesel filter fine filter 168
Discharge water in the fuel filter/water trap 169
Checking the coolant level 171

Drive mechanism and transmission system 172
Replacing the fine hydraulic transmission oil filter 172
Changing the hydraulic transmission crude oil filter 172
Clean the crude oil filter of the hydraulic transmission gear 173
Changing the oil of the hydraulic transmission gear 174
Checking the transmission gear and drive axle for leaks 175
Checking the oil level of the hydraulic transmission 175
Change the drive axle gearbox oil 176
Checking the drive axle gearbox oil 177
Check the installation of the engine, hydraulic transmission gear and drive axle 178
Checking the installation of the drive axle 178
Checking the brake fluid level in the brake fluid reservoir 178
Checking the joystick bellows 179
Adjust joysticks 179
Checking the wheels 180
Check the tyre inflation pressure 181
Tightening the wheel nuts 182
Changing wheels 182
Checking the condition of the antistatic belt 184
Clean and lubricate the steering axle 185

Chassis and bodywork 186
Checking the connecting bolts of the drive axle and lift mast 186
Checking the bonnet locking devices 186

Driver's cab 187
Checking the pedal group for ease of movement and lubricating as required 187
Checking other bearings and connections and lubricating 187
Checking that the brake system is functioning properly 187

Electrics/electronics 190
Checking the battery status 190
Checking the condition and tightness of cables and connections 191
Checking the fuse box 191

Hydraulics 192
Checking the hydraulic system for leaks 192
Replacing the suction filter 193
Replacing the return oil filter 193
Checking the hydraulic oil level 194
Changing the hydraulic oil 195
Checking installation of the tilt cylinder 196
Lubricating tilt cylinder bearings 197

Lifting system 198
Changing the fork arms 198
Check the fork arms and the fork arm quick-release apparatus 200
Checking the working condition and installation of the lift mast, lifting chains and lift cylinder 201
Adjusting the length of the lifting chains and lubricating using chain spray 202
Lubricating the lift mast and chains with chain spray 203

Special equipment 205
Checking the preload of the double hoses (if equipped with attachments) 205
Cleaning and lubricating the sideshift forks* and checking connections 205

6 Technical datasheet

Dimensions overview 208

Technical datasheet (WEICHAI) 209

Technical datasheet (HYUNDAI/Doosan D24 EU5) 212

Description of technical datasheet 217

1

Introduction

Your industrial truck

Technical description

This series forklift trucks are suitable for transporting and stacking goods up to the following load capacities: RCD 25 Plus forklift trucks can handle a maximum load of 2.5 t; RCD 30 Plus forklift trucks can handle a maximum load of 3.0 t; RCD 35 Plus forklift trucks can handle a maximum load of 3.5 t.

NOTE

Refer to each load capacity diagram for load centre of gravity data.

This model has a very environmentally friendly engine, as well as an efficient transmission system and high-performance hydraulics. The truck has undergone rigorous testing and is stable and reliable. Many years of market experience have proven our truck parts to be very reliable. The truck is able to perform a wide range of operations due to its small-diameter hydraulic steering wheel, comfortable hydraulic actuating lever and ample storage space.

This forklift range includes the following models:

IC trucks in this range:
RCD 25 Plus, RCD 30 Plus, RCD 35 Plus

Drive system

The drive system mainly comprises the engine, fuel system, air intake system, cooling system and exhaust system. The engine is integrated with the torque converter, transmission gear, transmission shaft and drive axle.

Power output from the engine is subjected to torque conversion in the torque converter, where it is input via the splined coupling of the turbine shaft to the clutch assembly of the gearbox. The power is transmitted from the transmission gear at a reduced speed to the differential, generating a differential drive which is provided to the drive wheels via the half-axle gears and half-axles.

Brake system

Two wheel brakes are respectively mounted on both ends of the drive axle.

NOTE

The parking brake pedal is also used for braking when the truck is stationary.

Operating system

Both hands are always free for steering and control of the work movements. The result is quick reversing and efficient stacking.

The two operating levers respectively control the lifting, lowering and tilting of goods. Further control levers are supplied for the operation of additional attachments.

Steering system

The steering system primarily consists of the steering wheel, steering column and steering control valve.

It is a hydrostatic steering system in which the steering wheel turns the rear wheels by means of the steering cylinder.

Steering is possible even when the engine is stopped, although it requires additional effort to turn the steering wheel.

Hydraulic system

The hydraulic system consists of a hydraulic pump, directional control valve, lift cylinder, tilt cylinder, pipelines and an oil supply tank, which is mounted on the right side of the vehicle body.

Electrical system

The electrical system is well protected, being primarily located in the lower right-hand side of the forklift control console and the left-hand side of the frame.

The required power is supplied by the 12 V, 80 Ah battery built into the chassis.

General

The industrial truck described in these operating instructions conforms with the applicable standards and safety regulations.

The industrial truck is fitted with state-of-the-art technology. Following these operating instructions will allow the industrial truck to be handled safely. By complying with the specifications in these operating instructions, the functionality and the approved features of the industrial truck will be retained.

Get to know the technology, understand it and use it safely - these operating instructions provide the necessary information and help to avoid accidents and to keep the truck ready for operation beyond the warranty period.

Therefore:

– Before commissioning the industrial truck, read the operating instructions and follow the instructions.

– Always follow all the safety information contained in the operating instructions and on the industrial truck.

Conformity marking

The manufacturer uses the conformity marking to document the conformity of the industrial truck with the relevant directives at the time of placing on the market:

- CE: in the European Union (EU)
- UKCA: in the United Kingdom (UK)
- EAC: in the Eurasian Economic Union

The conformity marking is applied to the nameplate. A declaration of conformity is issued for the EU and UK markets.

An unauthorised structural change or addition to the industrial truck can compromise safety, thus invalidating the declaration of conformity.

▷

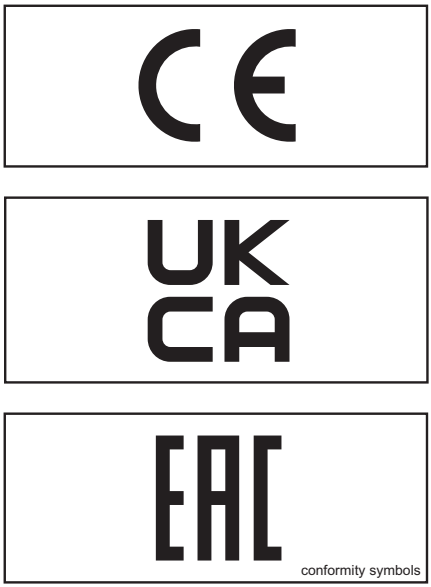

conformity symbols

Declaration that reflects the content of the declaration of conformity

Declaration

STILL GmbH
Berzeliusstraße 10
22113 Hamburg Germany

We declare that the specified machine conforms to the most recent valid version of the directives specified below:

Industrial truck type	**corresponding to these operating instructions**
Model	**corresponding to these operating instructions**

– "Machinery Directive 2006/42/EC" [1)]
– "Supply of Machinery Safety Regulations 2008, 2008 No. 1597" [2)]

Personnel authorised to compile the technical documents:

See declaration of conformity

STILL GmbH

[1)] For the markets of the European Union, the EU candidate countries, the EFTA States and Switzerland.
[2)] For the United Kingdom market.

The declaration of conformity document is supplied with the industrial truck. The declaration shown explains the conformity with the provisions of the EC Machinery Directive and the Supply of Machinery Safety Regulation 2008, 2008 No. 1597.

An unauthorised structural change or addition to the industrial truck can compromise safety, thus invalidating the declaration of conformity.

The declaration of conformity must be carefully stored and made available to the responsible authorities if necessary. It must also be handed over to the new owner if the industrial truck is sold on.

Nameplate

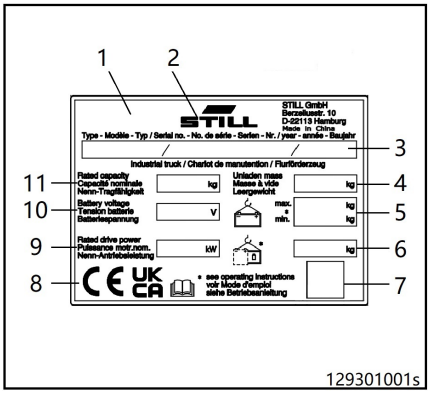

1	Nameplate
2	Manufacturer
3	Model/Product no./Year of manufacture
4	Unladen mass
5	Battery weight (max./min.)
6	Service weight
7	Placeholder for "Data matrix code"
8	Conformity marking: **CE mark** for the markets of the EU, the EU candidate countries, the EFTA States and Switzerland **UKCA mark** for the United Kingdom market **EAC mark** for the Eurasian Economic Union market
9	Rated drive power
10	Battery voltage
11	Rated capacity

NOTE

- *It is possible for there to be multiple conformity markings on the nameplate.*
- *The EAC mark may also be located in the immediate vicinity of the nameplate.*

Serial number

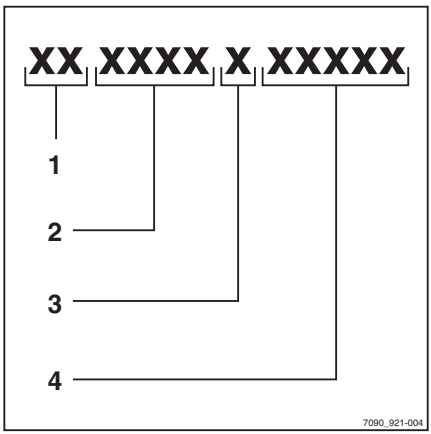

The serial number is used to identify the truck. The serial number is shown on the nameplate. Quote the serial number for all technical questions.

The serial number contains the following coded information:

1	Production location
2	Model
3	Year of manufacture
4	Sequential number

Using the truck

Commissioning

Commissioning is the initial intended use of the truck.

The necessary steps for the commissioning vary depending on the model and equipment of the truck. These steps require preparatory work and adjustment work that cannot be performed by the operating company. See also the chapter entitled "Definition of responsible persons".

– To commission the truck, contact the authorised service centre.

Intended use

The industrial truck may be used only for its intended purpose.

The industrial truck is intended for moving and lifting the loads specified on the capacity rating plate while observing the instructions given in these operating instructions.

Damage and faults

Damage or other faults on the industrial truck or the attachment must be immediately reported to supervisory personnel. Industrial trucks and attachments that are not operationally safe must not be used until they are properly repaired.

Do not remove or deactivate safety systems and switches. Fixed set values may only be changed with the approval of the manufacturer.

Danger area

The danger area is the area within which people may be at risk due to the movements of the industrial truck, its working equipment, its lifting accessories (e.g. attachments) or the goods that are carried. This also includes the area that can be affected by falling cargo or by lowering or falling working equipment.

People must not stand in the danger area of an industrial truck.

Working area

It is only permitted to drive on routes authorised for traffic by the operating company or its representatives. Traffic routes must be free from obstacles. Loads may only be set down and stored in the designated areas provided for this purpose.

Roadways

Roadways must be sufficiently firm, level and free from objects. Drainage channels, level crossings and similar obstacles must be evened out and, if necessary, ramps must be provided so that trucks can drive over these obstacles with as few bumps as possible.

Industrial trucks may only be used on roadways that do not have bends that are too sharp, gradients that are too steep or entrances that are too narrow or low.

Gradients may not exceed the values given in the operating instructions and must have a sufficiently rough surface. The top and bottom of the gradient must feature smooth and gradual transitions to prevent the load from scraping the ground and the undercarriage from being damaged.

Industrial trucks must not be parked on surfaces with a gradient. If this cannot be avoided, the industrial truck must be secured using wheel chocks in addition to the activated parking brake.

Do not exceed the permitted area load and point load of the roadway. There must be sufficient distance between the highest points of the industrial truck or the load and the fixed elements of the surrounding area.

Within the EU, the current version of directive 89/654/EEC (minimum safety and health requirements for the workplace) must be observed. The respective national guidelines apply for areas outside the EU.

Hazardous areas on roadways must be safeguarded or indicated by the standard road traffic signs and, if applicable, by additional warning signs.

When driving on public roads, the national regulations pertaining to drivers and industrial trucks must be observed. Observe country-specific restrictions for winter road conditions.

Fire protection

The operating company must ensure that suitable fire protection is available for the relevant application in the surroundings of the industrial truck. Depending on the application, additional fire protection on the industrial truck may be necessary. If in doubt, the responsible fire brigade can be contacted.

NOTE

If the truck is equipped with a fire extinguisher, the driver must fully understand how to use it. Instructions for use are provided on the fire extinguisher.

Attachments

Attachments may only be used for their intended purpose. Drivers must be taught how to operate the attachments.

Attachment operating instructions are enclosed for industrial trucks that are delivered from the factory with an attachment. Before commissioning an industrial truck with an attachment, check that loads are handled safely. Depending on the type of attachment, it may be necessary to make adjustments, e.g. pressure settings or adjusting stops and operating speeds. Corresponding instructions can be found in the operating instructions for the attachment.

If attachments are not supplied with the industrial truck, the specifications of the industrial truck manufacturer and the attachment manufacturer must be observed.

Mounting the attachment and connecting the energy supply for power-driven attachments must only be performed by authorised personnel in accordance with the information provided by the manufacturers. After each installation, the attachment must be checked for correct function prior to initial commissioning.

The permissible load capacity of the attachment and the permissible load (load capacity and load moment) of the industrial truck must not be exceeded by the combination of attachment and payload, see additional capacity rating plate.

Modifications, in particular attachments or conversions, are not permitted to be made to the industrial truck without the manufacturer's approval.

Improper use

The operating company or driver, and not the manufacturer, is liable if the truck is used in a manner that is not permitted.

WARNING

One of the main causes of accidents is the driver ignoring or being unaware of the basic safe operating practices of the truck.

The following basic safe operating practices must be observed to ensure the safety of operators and others.

DANGER

High risk of injury, death and property damage.

Avoid the use of prohibited substances.

The list below is merely illustrative and not exhaustive.

Never operate the truck in environments with a potentially explosive atmosphere.

Do not carry another passenger (unless a "two-person seat" is installed).

Do not overload the truck (by exceeding the rated load indicated on the load designation plate). Overloading can affect braking distances, truck stability and the strength of the lift mast.

Do not pick up an off-centre load.

Do not stand on the fork arms when they are lifting.

Do not increase the load capacity of the truck, by adding extra weight, for example.

Do not stack loads or turn when driving on a ramp.

Do not operate the truck on loose or greasy surfaces.

Do not drive on uneven or obstructed surfaces.

Never park the truck in a place that may obstruct fire extinguishers, fire escapes or aisles.

Do not dismount from the truck while it is moving.

Do not leave the truck unattended when the load is raised.

Never leave the vehicle unattended on a ramp.

When driving, do not place any part of your body outside the confines of the truck, lean on the edge of the truck or attempt to jump onto another truck or object.

Do not use the forks or any other part of the truck to push, pull or support items, unless the design permits this.

Operating steps

Adjust your driving style based on the conditions of the route, especially in hazardous work areas and when transferring loads.

Always look in the direction of travel.

Look out for pedestrians, to prevent the possibility of them becoming trapped between the truck and fixed obstacles.

Always sound the horn when approaching blind spots.

The truck and attachments must only be used for authorised applications.

Follow the instructions in the user manual when transporting loads.

On a ramp: Ensure that the truck has sufficient ground clearance to avoid striking the surface of the ramp. • Fully raise the load to avoid striking the surface of the ramp.

Drive a loaded truck forward when going uphill.

Drive a loaded truck in reverse when going downhill.

When raising a spreader, ensure that there is enough clearance.

When working near overhead power lines, observe the safety distances set by the competent authorities.

Only travel on surfaces that can withstand the combined weight of the truck and load.

Before leaving the operator's driving position, turn off the ignition and make sure you have applied the parking brake.

When driving, maintain a safe stopping distance from any vehicle or pedestrians in front of you.

Drivers should move off, brake, turn and reverse smoothly. Avoid sudden stops, sharp turns and overtaking at dangerous or blind spots.

Ensure that there is adequate ventilation when using the truck in enclosed or partially enclosed areas.

Summary

A safe, competent operator is one who takes pride in the way they operate their truck, respects the goods they handle and follows the correct operating procedures. **They never take risks**.

Precautions

- Do not drive on steep slopes, to prevent the load from slipping off.
- The truck must be switched off when left unattended. Key (or key code) must be removed when the truck is unattended to prevent unauthorised use.
- When using this truck, pay attention to the surroundings and do not become distracted.
- Please pay attention to the moving parts of the truck to prevent your hands from being crushed.

Description of use and climatic conditions

- Indoor and outdoor use.
- Ambient temperature in tropical and Nordic regions ranging from -20 °C to +45 °C.
- Use at up to 2000 m above sea level.

Using working platforms

⚠ WARNING

The use of working platforms is regulated by national law. The use of working platforms is only permitted by virtue of the jurisdiction in the country of use.

- Observe national legislation.
- Before using working platforms, consult the national regulatory authorities.

Information about documentation

Documentation scope

- Operating instructions
- Operating instructions for attachment parts (special equipment)
- Spare parts list

These operating instructions describe all measures necessary for the safe operation and proper maintenance of the truck in all possible variants at the time of printing. Special designs to meet customer requirements are documented in separate operating instructions. If you have any questions, please contact your service centre.

Enter the production number and the year of production located on the nameplate in the field provided:

Production no. .....

Year of production .....

Please quote these numbers for all technical enquiries.

Operating instructions are provided with each truck. These instructions must be stored carefully and must be available to the driver and operator at all times.

If the operating instructions are lost, the operator must immediately request a replacement from the manufacturer.

The spare parts list can be reordered there as a spare part.

Personnel responsible for operating and maintaining the equipment must be familiar with these operating instructions.

The operating company (see the chapter “Definition of responsible persons”) must ensure that all operators have received, read and understood these instructions.

Thank you for reading and complying with these operating instructions. If you have any questions or suggestions for improvements, or if you have found any faults, please contact your service centre.

Supplementary documentation

This industrial truck can be fitted with a **C**ustomer **O**ption (**CO**) that deviates from the standard equipment and the variants.

This CO may consist of:

- Special sensors
- A special attachment
- A special towing device
- Customised attachments

When fitted with a CO, the industrial truck is provided with additional documentation. This may take the form of an insert or separate operating instructions.

The original operating instructions for this industrial truck are valid for the operation of standard equipment and variants without restriction. The operational and safety

information in the original operating instructions continues to be valid in its entirety unless it is countermanded in this additional documentation.

The requirements for the qualification of personnel as well as the time for maintenance may vary. This is defined in the additional documentation.

– If you have any questions, contact your authorised service centre.

Issue date and topicality of the operating instructions

The issue date and the version of these operating instructions can be found on the title page.

STILL is constantly engaged in the further development of trucks. These operating instructions are subject to change, and any claims based on the information and/or illustrations contained in them cannot be asserted.

Please contact your authorised service centre for technical support relating to your truck.

Copyright and trademark rights

These instructions, including excerpts thereof, must not be reproduced, translated or made accessible to third parties, except with the express written approval of the manufacturer.

Explanation of signal terms used

DANGER

Indicates procedures that must be strictly adhered to in order to prevent the risk of fatalities.

WARNING

Indicates procedures that must be strictly adhered to in order to prevent the risk of injuries.

CAUTION

Indicates procedures that must be strictly adhered to in order to prevent material damage and/or destruction.

NOTE

For technical requirements that require special attention.

ENVIRONMENT NOTE

To prevent environmental damage.

Date of edition and latest update of this manual

The publication date of these operating instructions is printed on the cover sheet.

The manufacturer makes continuous efforts to improve its industrial trucks with modifications. The manufacturer reserves the right to make such additions to the contents of the truck's operating instructions in a timely manner.

To receive technical assistance, please contact the service centre authorised by your closest manufacturer.

List of abbreviations

This list of abbreviations applies to all types of operating instructions. Not all of the abbreviations that are listed here will necessarily appear in these operating instructions.

Abbreviation	Meaning	Explanation
ArbSchG	Arbeitsschutzgesetz	German implementation of EU occupational health and safety directives
Betr-SichV	Betriebssicherheitsverordnung	German implementation of the EU working equipment directive
BG	Berufsgenossenschaft	German insurance company for the company and employees
BGG	Berufsgenossenschaftlicher Grundsatz	German principles and test specifications for occupational health and safety
BGR	Berufsgenossenschaftliche Regel	German rules and recommendations for occupational health and safety
DGUV	Berufsgenossenschaftliche Vorschrift	German accident prevention regulations
CE	Communauté Européenne	Confirms conformity with product-specific European directives (CE labelling)
CEE	Commission on the Rules for the Approval of the Electrical Equipment	International commission on the rules for the approval of electrical equipment
DC	Direct Current	Direct current
DFÜ	Datenfernübertragung	Remote data transfer
DIN	Deutsches Institut für Normung	German standardisation organisation
EG	European Community	
EN	European standard	
FEM	Fédération Européene de la Manutention	European Federation of Materials Handling and Storage Equipment

Abbreviation	Meaning	Explanation
F_{max}	maximum Force	Maximum power
GAA	Gewerbeaufsichtsamt	German authority for monitoring/issuing regulations for worker protection, environmental protection, and consumer protection
GPRS	General Packet Radio Service	Transfer of data packets in wireless networks
ID no.	Identification number	
ISO	International Organization for Standardization	International standardisation organisation
K_{pA}	Uncertainty of measurement of sound pressure levels	
LAN	Local Area Network	Local area network
LED	Light Emitting Diode	Light emitting diode
L_p	Sound pressure level at the workplace	
L_{pAZ}	Average continuous sound pressure level in the driver's compartment	
LSP	Load centre of gravity	Distance of the centre of gravity of the load from the front face of the fork backs
MAK	Maximum workplace concentration	Maximum permissible air concentrations of a substance at the workplace
Max.	Maximum	Highest value of an amount
Min.	Minimum	Lowest value of an amount
PIN	Personal Identification Number	Personal identification number
PPE	Personal protective equipment	
SE	Super-Elastic	Superelastic tyres (solid rubber tyres)
SIT	Snap-In Tyre	Tyres for simplified assembly, without loose rim parts
StVZO	Straßenverkehrs-Zulassungs-Ordnung	German regulations for approval of vehicles on public roads
TRGS	Technische Regel für Gefahrstoffe	Ordinance on hazardous materials applicable in the Federal Republic of Germany
UKCA	United Kingdom Conformity Assessed	Confirms conformity with the product-specific directives that apply in the United Kingdom (UKCA labelling)
VDE	Verband der Elektrotechnik Elektronik Informationstechnik e. V.	German technical/scientific association
VDI	Verein Deutscher Ingenieure	German technical/scientific association

Abbreviation	Meaning	Explanation
VDMA	Verband Deutscher Maschinen- und Anlagenbau e. V.	German Mechanical Engineering Industry Association
WLAN	Wireless LAN	Wireless local area network

Definition of directions

The directions "forwards" (1), "backwards" (3), "right" (2) and "left" (4) refer to the installation position of the parts as seen from the driver's compartment; the load is to the front.

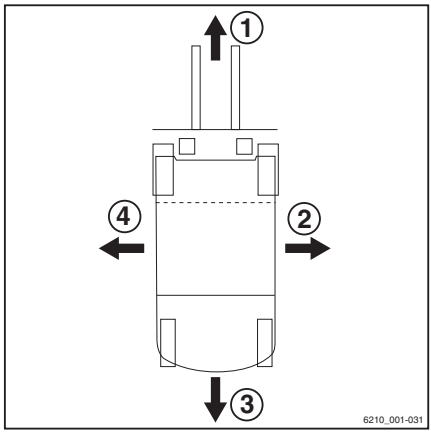

Illustrations

At many points in this documentation the (mostly sequential) operation of certain functions or operating procedures is explained. To illustrate these operations, schematic representations of an truck are used.

NOTE

These schematic representations do not represent the design state of the documented truck. They only serve to illustrate operating procedures.

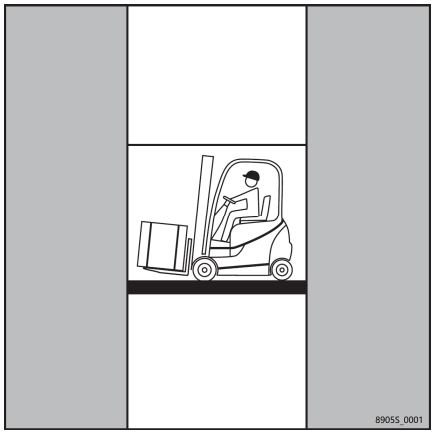

Environmental considerations

Packaging

During delivery of the truck, certain parts are packaged to provide protection during transport. This packaging must be removed completely prior to initial start-up.

ENVIRONMENT NOTE

The packaging material must be disposed of properly after delivery of the truck.

Disposal of components and batteries

The truck is composed of different materials. If components or batteries need to be replaced and disposed of, they must be:

- disposed of,
- treated or
- recycled in accordance with regional and national regulations.

NOTE

The documentation provided by the battery manufacturer must be observed when disposing of batteries.

ENVIRONMENT NOTE

We recommend working with a waste management company for disposal purposes.

2

Safety

Safety guidelines

The operating company or the person it has commissioned must ensure that the driver understands all safety information and that all directives and safety regulations are observed.

During training, drivers must familiarise themselves with the following:

- The operating conditions of the working area
- The specific technical characteristics of the industrial truck
- The operation of attachments

Driving, control and steering operations must be practised with an unladen industrial truck until they are completely mastered. Only then may a laden industrial truck be used for practice.

Operating safely

⚠ DANGER

The industrial truck must not be used by unauthorised persons.

Only persons who are trained, authorised and commissioned to operate the industrial truck may have access to the industrial truck.

Controlled access is possible via the switch key or an input unit with a keypad or with a transponder.

⚠ DANGER

Risk of fatal injury due to insufficient visibility.

Trucks may only be operated if the driver has sufficient visibility.

– Ensure that there is sufficient light in the working area or use working spotlights.

– Glare caused by lighting (e.g. clipboard lighting). If necessary, adjust or switch off the lighting accordingly.

– The windscreen, rear window, roof panel and side windows as well as the rear-view mirror and lighting must be cleared of misting and, if necessary, dirt, ice and snow before driving off.

– For trucks with a driver's cab without a heating system or without air conditioning, the driver must ensure that they have a clear view by ventilating the cab during operation.

⚠ DANGER

Safety systems (e.g. the seat switch) are in place to ensure safety.

Under no circumstances may any safety systems be disabled.

⚠ DANGER

Risk of fire due to hot exhaust gases!

Exhaust gases become so hot that materials in the immediate vicinity may smoulder or burn.

Deposits of combustible materials may ignite in the vicinity of hot components, e.g. exhaust pipes.

– Observe the following courses of action!

– Maintain an appropriate safety distance between combustible materials and the exhaust gas outlet.

– If materials start to burn, take appropriate fire extinguishing measures immediately.

– Remove deposits on hot components.

– Keep away from flammable liquids.

⚠ WARNING

Risk of burns due to hot exhaust gases.

Exhaust gases and exhaust-gas-routing components become so hot that direct body contact can cause burns.

– Do not touch hot components.

⚠ CAUTION

Various pieces of special equipment are connected to the "speed reduction" special function. This is purely an assistance function, and the driver must not rely solely on this function during operation.

The driver is always responsible for safe operation.

NOTE

If the truck is equipped with a fire extinguisher, make sure that you familiarise yourself with how to use it in the event of an emergency. Instructions for use are provided on the fire extinguisher.

Working on the truck

⚠ DANGER

Any additional bores or welding on the overhead guard will compromise its rigidity.

It is therefore strictly prohibited to drill bores in the overhead guard or to perform welding work on it.

⚠ WARNING

Depending on the duration of use and operating time, components carrying exhaust gases and exhaust air may become hot.

Protective equipment must therefore be worn.

⚠ WARNING

In trucks with an accumulator, serious injuries may occur if the accumulator is handled incorrectly.

Before starting work on the accumulator, it must be depressurised.

Contact your service partner.

⚠ CAUTION

Welding operations on other parts of the truck can cause damage to the electronics.

Therefore, always disconnect the battery and all connections to the electronic controls before performing any welding work.

⚠ CAUTION

Various functions are supported by gas springs. Gas springs are subjected to a high internal pressure of up to 300 bar.

Gas springs may be removed only when they are not under tension, and must never be opened without prior instruction. Any kind of damage, lateral forces, buckling, temperatures in excess of 80°C and heavy contamination must be avoided under all circumstances.

Damaged or defective gas springs must be replaced immediately.

Contact your service partner.

Safety information for electromagnetic compatibility

⚠ WARNING

In operating areas with magnetic fields that have a magnetic flux density greater than 5 mT, unintentional truck movements and lift mast movements cannot be entirely excluded in unfavourable circumstances.

For magnetic fields with magnetic flux densities greater than 5 mT, components developed especially for this purpose must be used.

Contact your service partner.

Magnetic flux densities greater than 5 mT can occur in induction furnaces for metal smelting (e.g. aluminium), with resistance welders for seam or spot welding, or on strong demagnetisation coils, for example. However, as the flux densities reduce to a fraction as the distance increases by e.g. 50 cm, actual influences are not known to occur in practice.

Electromagnetic radiation emitted by the industrial truck is far below the permissible limit values in Europe. The immunity to electromagnetic radiation is above the minimum legal values.

⚠ WARNING

If a driver has active medical equipment such as a pace maker, defibrillator, cochlear implant, insulin pump or hearing aid, there is a possibility that the capabilities of the driver could be impaired.

The operating company must take drivers whose capabilities are restricted due to implanted or body-worn medical equipment into account in the hazard assessment. The instructions of the physician and of the manufacturer of the medical equipment must be followed.

⚠ WARNING

Risk from non-ionising radiation from retrofitted devices (e.g. radio transmitter).

Persons with active or non-active implanted medical equipment must not be exposed to excessive non-ionising radiation from the electromagnetic fields of retrofitted devices.

The guidelines from the respective device manufacturer must be followed. If necessary, fit a notice warning about non-ionising radiation within the field of vision of the driver.

Stability

Stability is guaranteed if your industrial truck is used according to its intended use.

The following actions may jeopardise stability:

- Driving with a raised load
- Cornering at excessive speeds
- Driving with a load that is protruding to the side (e.g. sideshift)
- Turning on and driving diagonally across descents or ascents
- Driving on descents or ascents with the load on the downhill side
- Loads that are too wide
- Driving with a swinging load
- Driving over ramp edges or steps

In the case of tip-over

d3921101

- Stay buckled up
- Don't jump
- Hold on tight
- Brace feet
- Lean away

The stability of your industrial truck is ensured if used properly and as intended. Should the industrial truck tip over during an unapproved application or due to incorrect operation, always follow the instructions depicted above.

Definition of terms used for responsible persons

Specialist

A qualified person is defined as a service engineer or a person who fulfils the following requirements:

- A completed vocational qualification that demonstrably proves their professional expertise. This proof should consist of a vocational qualification or a similar document.
- Professional experience indicating that the qualified person has gained practical experience of industrial trucks over a proven period during their career During this time, this person has become familiar with a wide range of symptoms that require checks to be carried out, such as based on the results of a hazard assessment or a daily inspection
- Recent professional involvement in the field of the industrial truck test in question and an appropriate further qualification are essential. The qualified person must have experience of carrying out the test in question or of carrying out similar tests. Moreover, this person must be aware of the latest technological developments regarding the industrial truck to be tested and the risk being assessed

Operating company

The operating company is the natural or legal person or group who operates the truck or on whose authority the truck is used.

The operating company must ensure that the truck is only used for its proper purpose and in compliance with the safety regulations set out in these operating instructions.

The operating company must ensure that all users read and understand the safety information.

The operating company is responsible for the scheduling and correct performance of regular safety checks.

We recommend that the national performance specifications are adhered to.

Drivers

This truck may only be driven by suitable persons who are at least 18 years of age, have been trained in driving, have demonstrated their skills in driving and handling loads to the operating company or an authorised representative, and have been specifically instructed to drive the truck. Specific knowledge of the truck to be operated is also required.

The training requirements under §3 of the Health and Safety at Work Act and §9 of the plant safety regulations are deemed to have been satisfied if the driver has been trained in accordance with BGG (General Employers' Liability Insurance Association Act) 925. Observe the national regulations for your country.

Driver rights, duties and rules of behaviour

The driver must be trained in his rights and duties.

The driver must be granted the required rights.

The driver must wear protective equipment (protection suit, safety footwear, safety helmet, industrial goggles and gloves) that is appropriate for the conditions, the job and the load to be lifted. Solid footwear should be worn to ensure safe driving and braking.

The driver must be familiar with the operating instructions and have access to them at all times.

The driver must:

- have read and understood the operating manual
- have familiarised himself with safe operation of the truck
- be physically and mentally able to drive the truck safely

⚠ DANGER

The use of drugs, alcohol or medications that affect reactions impair the ability to drive the truck!

Individuals under the influence of the aforementioned substances are not permitted to perform work of any kind on or with the truck.

Prohibition of use by unauthorised persons

The driver is responsible for the truck during working hours. He must not allow unauthorised persons to operate the truck.

When leaving the truck, the driver must secure it against unauthorised use, e.g. by pulling out the key.

Basic principles for safe operation

Insurance cover on company premises

The company premises are very often restricted public traffic areas.

NOTE

It is advisable to review the operational liability insurance so that insurance covers the truck with respect to third parties in the event of damage caused in restricted public traffic areas.

Modifications and retrofitting

If the industrial truck will be used for work that is not listed in the directives or in these instructions, the industrial truck must be converted or retrofitted for this purpose as required. Any structural modification can impair the handling and stability of the industrial truck, and can result in accidents.

Any modifications that adversely affect stability, load capacity and the circumferential view from the industrial truck require written approval by the manufacturer.

The following components may only be modified with prior written approval from the manufacturer:

- Brakes
- Steering
- Operating devices
- Safety systems
- Equipment variants
- Attachments

The industrial truck may be converted only with written approval by the manufacturer. If necessary, obtain approval from the relevant authorities.

– Only the authorised service centre is permitted to perform welding work on the industrial truck.

We warn against installing and using restraint systems that have not been approved by the manufacturer.

– Contact the authorised service centre before converting or retrofitting the truck.

Only the authorised service centre is permitted to perform welding work on the industrial truck.

⚠ DANGER

Risk of explosion from additional holes in the area surrounding the battery!

Explosive gases can escape and can lead to potentially fatal injuries if they explode. Sealing bores with plugs is not sufficient to prevent gas from escaping.

– Do not drill holes in the area surrounding the battery.

The operating company is permitted to make modifications to the industrial truck independently only if the manufacturer goes into liquidation and is not taken over by another legal person.

The operating company must also fulfil the following prerequisites:

- Design documents, test documents and assembly instructions associated with the modification must be permanently archived and remain accessible at all times.
- The capacity rating plate, the decal information, the hazard warnings and the operating instructions must be checked to ensure that they are consistent with the modifications and must be amended if required.
- Modifications must be designed, checked and implemented by a design office that specialises in industrial trucks. The design office must comply with the standards and directives valid at the time that modifications are made.

Decal information with the following data must be permanently affixed to the industrial truck so that it is clearly visible:

- Type of modification
- Date of modification
- Name and address of the company that carried out the modification

Changes to the overhead guard and roof loads

⚠ DANGER

In the event of the overhead guard failing due to a falling load or the truck tipping over, there are potentially fatal consequences for the driver. There is a risk to life!

Welding and drilling on the overhead guard changes the material characteristics and the structural design of the overhead guard. Excessive forces caused by falling loads or the truck tipping over may result in buckling of the modified overhead guard and no protection for the driver.

– Do not perform welding on the overhead guard.
– Do not perform drilling on the overhead guard.

⚠ CAUTION

Heavy roof loads damage the overhead guard!

To ensure the stability of the overhead guard at all times, a roof load may only be mounted on the overhead guard if the structural design has been tested and the manufacturer has given approval.

– Seek advice from the authorised service centre for the mounting of roof loads.

Warning regarding non-original parts

Original parts, attachments and accessories are specially designed for this truck. We draw your attention to the fact that parts, attachment parts and accessories supplied by other companies have not been tested or approved by STILL.

⚠ CAUTION

The installation or use of such products may have a negative impact on the design of the truck and thus impair active or passive driving safety.

We recommend that you obtain approval from the manufacturer and, if applicable, from the relevant regulatory authorities before installing such parts. The manufacturer accepts no liability for any damage caused by the use of non-original parts and non-original accessories.

Damage, faults

Any damage or faults observed on the truck or the accessories must be reported immediately to the responsible personnel. The truck and accessories must never be used before they are correctly reconditioned as they cannot be guaranteed to be safe for operating or driving.

The safety mechanisms and switches must never be removed or disabled. The predefined setpoint values must not be modified.

Work on the electric installation (e.g. connecting a radio, additional lights or other accesso-

ries) is permitted only with the approval of the manufacturer.

Damage, defects and misuse of safety systems

Damage or other defects on the truck or attachment must be reported to the supervisor or responsible fleet manager immediately so that they can have the defect rectified.

Trucks and attachments that are not functional or safe to drive may not be used until they have been properly repaired.

Do not remove or deactivate safety systems and switches.

Fixed set values may only be changed with the approval of the manufacturer.

Work on the electrical system (e.g. connecting a radio, additional headlights etc.) is only permitted with the manufacturer's written approval. All electrical system interventions must be documented.

Even if they are removable, roof panels may not be removed, as they are designed to protect against small falling objects.

Medical devices

The operation of medical devices, for example pacemakers or hearing aids, can be impaired. Check with your doctor or manufacturer if the medical devices are sufficiently protected against electromagnetic interference.

Tyres

⚠ DANGER

Risk to stability!

Failure to observe the following information and instructions can lead to a loss of stability. The truck may tip over, risk of accident!

The following factors can lead to a loss of stability and are therefore **prohibited**:

- Different tyres on the same axle, e.g. pneumatic tyres and superelastic tyres
- Tyres not approved by the manufacturer
- Excessive tyre wear
- Tyres of inferior quality
- Changing rim wheel parts
- Combining rim wheel parts from different manufacturers

The following rules must be observed to ensure stability:

- Only use tyres with equal and permitted levels of wear on the same axle
- Only use wheels and tyres of the same type on the same axle, e.g. only superelastic tyres
- Only use wheels and tyres approved by the manufacturer
- Only use high-quality products

Wheels and tyres approved by the manufacturer can be found on the spare parts list.
If other wheels or tyres are to be used, authorisation from the manufacturer must be obtained beforehand.

– Contact the authorised service centre on this matter.

When changing wheels or tyres, always ensure that this does not cause the truck to tilt to one side (e.g. always replace right-hand and left-hand wheels at the same time). Changes must only be made following consultation with the manufacturer.

If the type of tyre used on an axle is changed, for example from superelastic tyres to pneumatic tyres, the load diagram must be changed accordingly.

– Contact the authorised service centre on this matter.

Length of the fork arms

⚠ DANGER

Risk of accident due to the incorrect selection of fork arms!

– The fork arms must match the depth of the load.

If the fork arms are too short, the load may fall off the arms after it has been picked up. In addition, be aware that the load centre of gravity may shift as a result of dynamic forces, such as braking. A load that is otherwise resting safely on the fork arms may move forwards and fall.

If the fork arms are too long, they can catch on loading units behind the load that is to be picked up. These other loading units then fall over when the load is raised.

– For help with selecting the correct fork arms, contact the authorised service centre.

Exercise caution when handling gas springs and accumulators

⚠ WARNING

Gas springs are under high pressure. Improper removal results in an elevated risk of injury.

For ease of operation, various functions on the truck can be supported by gas springs. Gas springs are complex components that are subject to high internal pressures (up to 300 bar). They may under no circumstances be opened unless instructed to do so, and may be installed only when not under pressure. If required, the authorised service centre will depressurise the gas spring in accordance with the regulations before removal. Gas springs must be depressurised before recycling.

– Avoid damage, lateral forces, buckling, temperatures over 80°C and heavy contamination.
– Damaged or defective gas springs must be changed immediately.
– Contact the authorised service centre.

⚠ WARNING

Accumulators are under high pressure. Improper installation of an accumulator results in an elevated risk of injury.

Before starting work on the accumulator it must be depressurised.

– Contact the authorised service centre.

Residual risks

Residual dangers, residual risks

Despite working with care and complying with the standards and regulations, the possibility of other dangers arising when using the truck cannot be ruled out.

The truck and all other system components comply with current safety requirements. Even when the industrial truck is used in accordance with its intended use and all instructions provided are followed, some residual risk cannot be excluded.

A residual risk cannot be excluded even beyond the narrow limits of the danger area that the truck itself represents. In order to be able to react immediately in the event of a malfunction, an incident, a breakdown etc., persons in the danger area must pay increased attention to the truck.

⚠ WARNING

All persons in the danger area of the truck must be aware of the dangers posed by the truck.

In addition, your attention is drawn to the safety regulations given in these operating instructions.

Risks can include:

- Escape of consumables due to leakages, rupture of lines and containers etc.
- Risk of accident when driving over difficult ground such as gradients, very smooth or uneven surfaces, or with poor visibility etc.
- Falling, tripping etc. on the truck, especially in wet weather, with leaking consumables or on icy surfaces
- Risk of fire and explosion from the batteries and electrical voltages
- Human error resulting from failure to observe the safety regulations
- Unrepaired damage or faulty and worn components
- Insufficient maintenance and testing
- Use of incorrect consumables
- Exceeding test intervals

If the operating company negligently or intentionally fails to comply with these require-

ments, this can lead to an accident. In this case, the manufacturer is exempt from liability.

Stability

The stability of the truck has been tested to the latest technological standards. If the truck is used in the proper manner and in accordance with its intended use, the stability of the truck is guaranteed. These standards only take into account the dynamic and static tipping forces that can arise when used in accordance with the specified operating rules and intended use. The danger of exceeding the moment of tilt and losing stability due to improper or incorrect operation can never be ruled out.

The loss of stability can be avoided or minimised by complying with following principles:

- Always secure the load against slipping, e.g. by lashing.
- Always transport unstable loads in suitable containers.
- Always drive slowly when cornering.
- Drive with the load lowered.
- On trucks fitted with a sideshift, align and transport loads such that the load centre of gravity is positioned centrally to the truck.
- Avoid turning and diagonally driving across slopes or gradients.
- Never have the load facing downhill when travelling on slopes or gradients.
- Always take great care when transporting suspended loads.
- Do not drive over ramp edges or steps.

Special risks associated with using the truck and attachments

Approval from the manufacturer and attachment manufacturer must be obtained each time the truck is used in a manner that falls outside the scope of normal use, and in cases where the driver is not certain that he can

use the truck correctly and without the risk of accidents.

Overview of hazards and countermeasures

NOTE

This table is intended to help evaluate the hazards in your facility and applies to all drive types. It does not claim to be complete.

– Observe the national regulations for the country in which the truck is being used.

Hazard	Course of action	Check note √ done - Not applicable	Notes
Truck equipment does not comply with local regulations	Testing	O	If in doubt, consult the responsible factory inspectorate or employers' liability insurance association
Driver's lack of skills or qualifications	Driver training (sit-on and stand-on)	O	DGUV principle 308-001 VDI 3313 driver's licence
Usage by unauthorised persons	Access with key only for authorised persons	O	
Truck not safe for operation	Periodic inspection and rectification of defects	O	German Ordinance on Industrial Safety and Health (BetrSichV)
Risk of falling when using working platforms	Compliance with national regulations (different national laws)	O	German Ordinance on Industrial Safety and Health (BetrSichV) and employer's liability insurance associations
Impaired visibility due to load	Application planning	O	German Ordinance on Industrial Safety and Health (BetrSichV)
Contamination of breathable air	Assessment of diesel exhaust gases	O	Technical Regulations for Hazardous Substances (TRGS) 554 and the German Ordinance on Industrial Safety and Health (BetrSichV)
	Assessment of LPG exhaust gases	O	German threshold limit values list (MAK-Liste) and the German Ordinance on Industrial Safety and Health (BetrSichV)

Hazard	Course of action	Check note √ done - Not applicable	Notes
Impermissible usage (improper usage)	Provide operating instructions	O	German Ordinance on Industrial Safety and Health (BetrSichV) and German Health and labour protection law (ArbSchG)
	Written notice of instruction to driver	O	German Ordinance on Industrial Safety and Health (BetrSichV) and German Health and labour protection law (ArbSchG)
	German Ordinance on Industrial Safety and Health (BetrSichV), observe the operating instructions	O	
When fuelling			
a) Diesel	German Ordinance on Industrial Safety and Health (BetrSichV), observe the operating instructions	O	
b) LPG	DGUV regulation 79, observe the operating instructions	O	
When charging the drive battery	German Ordinance on Industrial Safety and Health (BetrSichV), observe the operating instructions	O	VDE 0510-47 (= DIN EN 62485-3): In particular - Ensure adequate ventilation - Insulation value within the permissible range
When using battery chargers	German Ordinance on Industrial Safety and Health (BetrSichV), DGUV rule 113-001 and observe the operating instructions	O	German Ordinance on Industrial Safety and Health (BetrSichV) and DGUV rule 113-001
When parking LPG trucks	German Ordinance on Industrial Safety and Health (BetrSichV),	O	German Ordinance on Industrial Safety and Health (BetrSichV) and DGUV rule 113-001

Hazard	Course of action	Check note √ done - Not applicable	Notes
	DGUV rule 113-001 and observe the operating instructions		
When operating driverless transport systems			
Roadway quality inadequate	Clean/clear roadways	O	German Ordinance on Industrial Safety and Health (BetrSichV)
Loading equipment incorrect/slipped	Reposition load on pallet	O	German Ordinance on Industrial Safety and Health (BetrSichV)
Unpredictable driving behaviour	Employee training	O	German Ordinance on Industrial Safety and Health (BetrSichV)
Routes blocked	Mark routes Keep roadways clear	O	German Ordinance on Industrial Safety and Health (BetrSichV)
Routes intersect	Announce right-of-way rule	O	German Ordinance on Industrial Safety and Health (BetrSichV)
No person detection when placing goods into stock and removing goods from stock	Employee training	O	German Ordinance on Industrial Safety and Health (BetrSichV)

Danger to employees

According to the German Ordinance on Industrial Safety and Health (BetrSichV) and labour protection law (ArbSchG), the operating company must determine and assess hazards during operation, and establish the labour protection measures required for employees (BetrSichVO). The operating company must therefore draw up appropriate operating instructions (§ 6 ArbSchG) and nominate a person who is responsible for these operating instructions. Drivers must be informed of the operating instructions that apply to them.

NOTE

Please note the definition of the following responsible persons: "operating company" and "driver".

The design and equipment of the truck comply with the standards and directives required for CE conformity. The design and equipment also comply with the standards and directives necessary for the UKCA compliance that is required in the United Kingdom. The design and equipment are therefore not part of the required scope of the hazard assessment. The same applies to attachments with their own CE labelling and UKCA labelling. The operating company must, however, select the type and equipment of the trucks so as to comply with the local provisions for deployment.

The result of the hazard assessment must be documented (§ 6 ArbSchG). In the case of truck applications involving similar hazard situations, the results may be summarised. Refer to the chapter entitled "Overview of hazards and countermeasures", which provides advice on complying with this regulation. The overview specifies the primary hazards that, in the event of non-compliance, are the most frequent causes of accidents. If other major hazards are present as a result of the specific operating conditions, these hazards must also be taken into consideration.

The conditions of use for trucks are broadly similar in many plants, so the hazards can be summarised in one overview. Observe the information provided by the relevant employers' liability insurance association on this subject.

Safety tests

Carrying out regular inspections on the truck ▷

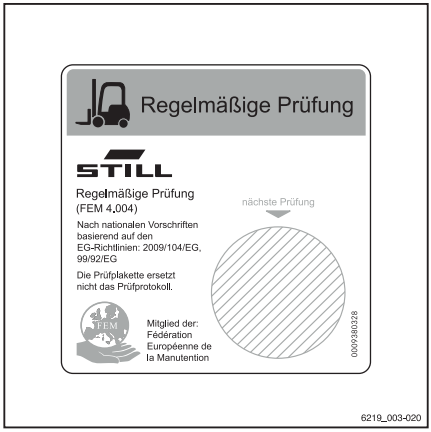

The operating company must ensure that the truck is checked by a specialist at least once a year or after particular incidents.

As part of this inspection, the technical condition of the truck must be completely tested with regard to accident safety. In addition, the truck must be thoroughly checked for damage that may have been caused by improper use. A test log must be created. The results of the inspection must be retained at least until a further two inspections have been carried out.

The inspection date is indicated by an adhesive label on the truck.

– Arrange for the authorised service centre to perform regular testing on the truck.
– Observe the guidelines for tests carried out on the truck in accordance with FEM 4.004.

The operating company is responsible for ensuring that any defects are remedied without delay.

– Notify your authorised service centre.

NOTE

In addition, observe the national regulations for the country of use.

Insulation testing

The truck insulation must have sufficient insulation resistance. For this reason, insulation testing in accordance with DIN EN 1175 and DIN 43539, VDE 0117 and VDE 0510 must be conducted at least once every year.

NOTE

Contact your service centre to arrange for an insulation test.

Measuring the insulation resistance of the electrical system

NOTE

Nominal battery voltage < test voltage < 500 V.

– Ensure that all voltage sources have been disconnected from the circuit to be tested.

– Measure the insulation resistance with a suitable measuring device.

The insulation resistance can be considered sufficient if it measures at least 1000 Ω/V for nominal battery voltage against ground.

– Contact the authorised service centre.

Checking the diesel engine emissions

– Check the diesel engine emissions yearly in accordance with TRGS 554.

The exhaust-gas check must be carried out by a "competent person" and must be recorded in writing.

– Notify the authorised service centre.

NOTE

Observe the national regulations for the country in which the truck is being used.

Safety regulations for handling consumables

Permissible consumables

⚠ WARNING

Consumables can be dangerous.

It is necessary to follow the safety regulations when handling these substances.

Refer to the maintenance data table for the permissible substances necessary for operation.

Hydraulic fluid

⚠ WARNING

During operation of the forklift truck, hydraulic fluids are pressurised and are hazardous to your health.

- Do not spill these fluids!
- Follow the statutory regulations
- Do not allow the fluids to come into contact with hot motor parts.
- Do not allow to come into contact with the skin.
- Avoid inhaling the spray
- Penetration of pressurised fluids into the skin is particularly dangerous if these fluids escape at high pressure due to leaks in the hydraulic system. In case of such injury, seek medical advice immediately.
- To avoid injury, use appropriate personal protective equipment (e.g. protective gloves, industrial goggles, skin protection and skin care products).

ENVIRONMENT NOTE

Hydraulic fluid is a water-polluting substance!

Always store hydraulic fluid in containers complying with the regulations.

Avoid spilling.

Spilt hydraulic fluid should be removed with oil-binding agents at once and disposed of according to the regulations.

Dispose of old hydraulic fluid according to regulations.

Battery acid

⚠ WARNING

Battery acid contains dissolved sulphuric acid. This is toxic.

- Avoid touching or swallowing the battery acid at all costs.
- In case of injury, seek medical advice immediately.

⚠ WARNING

Battery acid contains dissolved sulphuric acid. This is corrosive.

- When working with battery acid, use appropriate PSA (rubber gloves, apron, protection goggles).
- When working with battery acid, never wear a watch or jewellery.
- Do not allow any acid to get onto clothing or skin or into the eyes. If this does happen, rinse immediately with plenty of clean water.
- In case of injury, seek medical advice immediately.
- Immediately rinse away spilt battery acid with plenty of water.
- Follow the statutory regulations.

ENVIRONMENT NOTE

- Dispose of used battery acid in line with the applicable regulations.

Oils

⚠ DANGER

Oils are flammable!

- Follow the statutory regulations.
- Do not allow oils to come into contact with hot engine parts.
- No smoking, fires or naked flames!

⚠ DANGER

Oils are toxic!

- Avoid contact and consumption.
- If vapour or fumes are inhaled, move to fresh air immediately.
- In the event of contact with the eyes, rinse thoroughly (for at least 10 minutes) with water and then consult an eye specialist.
- If swallowed, do not induce vomiting. Seek immediate medical attention.

⚠ WARNING

Prolonged intensive contact with the skin can result in dryness and irritate the skin!

– Avoid contact and consumption.
– Wear protective gloves.
– After any contact, wash the skin with soap and water, and then apply a skin care product.
– Immediately change soaked clothing and shoes.

⚠ WARNING

There is a risk of slipping on spilled oil, particularly when combined with water!

– Spilt oil should be removed immediately with oil-binding agents and disposed of according to the regulations.

ENVIRONMENT NOTE

Oil is a water-polluting substance!

- *Always store oil in containers that comply with the applicable regulations.*
- *Avoid spilling oils.*
- *Spilt oil should be removed immediately with oil-binding agents and disposed of according to the regulations.*
- *Dispose of old oils according to the regulations.*

Diesel fuel

⚠ WARNING

Diesel fuel is combustible.

– Observe statutory regulations.
– Do not allow diesel fuel to come into contact with hot engine components.

Do not smoke!

⚠ WARNING

Diesel fuel is toxic!

- Avoid contact and swallowing.
- If vapour or fumes are inhaled, administer fresh air immediately.
- After contact with the eyes, rinse thoroughly (for at least 10 minutes) with water and then consult an eye specialist.
- If swallowed, do not induce vomiting. Seek immediate medical attention.

⚠ WARNING

Prolonged intensive contact with the skin can result in loss of skin oils and can irritate the skin!

- Avoid contact and swallowing.
- Wear protective gloves.
- After any contact, wash the skin with soap and water, and then apply a skin care product.
- Immediately change soaked clothing and shoes.

⚠ WARNING

Risk of slipping due to spilled diesel fuel, particularly in combination with water.

- Immediately collect spilled diesel fuel using an oil-binding agent and dispose of it in accordance with regulations.

ENVIRONMENT NOTE

Diesel fuel is a water-polluting substance!

- Always store in regulation containers.
- Avoid spilling diesel fuel.
- Immediately collect spilled diesel fuel using an oil-binding agent and dispose of it in accordance with regulations.

Coolant and cooling fluid

⚠ WARNING

Coolant and cooling fluid can be hazardous to your health and the environment!

Coolants are chemical corrosion inhibitors and cooling system protecting agents such as Glysantin. The cooling fluid is an appropriate mixture of water and coolant. Coolant in both concentrated and dilute form can be hazardous to your health if swallowed, or hazardous to the environment if spilled.

- Store coolant and cooling fluid only in their original containers and do not spill them.
- Never store coolant or cooling fluid in empty food containers, bottles or other containers.
- Observe the national regulations for the country of use.

ENVIRONMENT NOTE

- Soak up any spilt coolant or cooling fluid immediately using an oil binding agent and dispose of it in accordance with the national regulations for the country of use.
- Dispose of old coolant or cooling fluid in accordance with the national regulations for the country of use.

Brake fluid

⚠ WARNING

Brake fluid is poisonous!

- Avoid swallowing. In the event of swallowing, do not induce vomiting. Rinse out your mouth thoroughly with water and ask a doctor for advice.
- Avoid aerosolisation and inhalation. In the event of inhalation, seek fresh air. Ask a doctor for advice if necessary.

⚠ WARNING

Brake fluid is hazardous to your health!

Brake fluid irritates the eyes and can dry out the skin upon prolonged contact.

- Coat your hands with a protective skin cream prior to starting work.
- Avoid prolonged or intensive skin contact. In the event of skin contact, clean the wetted skin with water and soap, and subsequently apply a skin care product.
- Prevent contact with the eyes. In the event of contact with the eyes, wash out the affected eye(s) with clean water for ten minutes and then ask a doctor for advice.
- Change clothing soiled with brake fluid as soon as possible.

⚠ CAUTION

Brake fluid is flammable!

- Do not allow brake fluid to come into contact with hot motor parts.
- Smoking, fires and naked flames are prohibited.

⚠ CAUTION

Brake fluid has strong dissolving and colour-changing properties.

- Immediately rinse off any brake fluid that has splashed on paint, clothing, and shoes with plenty of water

ENVIRONMENT NOTE

Brake fluid is a water pollutant!

- *Always store brake fluid in containers complying with the regulations..*
- *Do not spill brake fluid.*
- *Spilt brake fluid must be removed immediately using an oil binding agent and disposed of in accordance with regulations*
- *Dispose of old brake fluid according to the regulations.*
- *Observe the national regulations for the country in which the truck is being used.*

Disposal of consumables

ENVIRONMENT NOTE

Materials that have to be disposed of following maintenance, repair and cleaning must be systematically collected and disposed of in accordance with regulations. Observe the national regulations for your country. Work may only be carried out in areas designated for this purpose. Take care to minimise, as far as possible, any impact on the environment.

- Any spillage of fluids such as hydraulic oil, brake fluid or gear lubricant oil must be immediately soaked up with an oil-binding agent.
- The regulations for disposal of used oil are applicable.
- Any spillage of battery acid must be neutralised immediately.

Noise level

This value has been determined based on EN12053 driving, lifting and idle test methods.

Noise level at the driver's ear:

2.5–3.5 tonne model (without driver's cab)	Truck with Weichai WP3.2 : L_{pAZ} = 85.0 ±4dB(A) Truck with HYUNDAI/Doosan D24: L_{pAZ} = 85.0 ±3 dB(A) Truck with Yanmar: L_{pAZ} = 87.0 ±4 dB(A)

NOTE

The noise level may be higher or lower than this value when operating the forklift truck. Differing tasks and external factors may lead to an increase in noise levels.

Frequency characteristics for vibrations imparted to the human body

This value has been determined from experiments using standard equipment based on technical data in the EN13059 and EN12096 standards (driving over test course with bumps).

Whole-body vibration transmitted to driver with standard seat:

	Truck with WEI-CHAI engine	Truck with HYUN-DAI/Doosan engine	Truck with Yanmar engine
$a_{W,ZS}$(m/s^2)	1.4	1.3	1.8
Uncertainty K (m/s^2)	0.4	0.4	0.5

NOTE

The indicated vibration frequency imparted to the human body cannot be used to determine the actual frequency load when operating the truck. This frequency load depends on operating conditions (road surface conditions, operating modes etc.) and must therefore be determined according to site conditions, if necessary.

Exhaust gases

CAUTION

Risk to health from exhaust gases! Exhaust gases from internal combustion engines are harmful to your health. In particular, the soot particles contained in the diesel exhaust gas can cause cancer. Letting the combustion engine idle runs a risk of poisoning from the CO, CH and NO_x components contained in the exhaust gas

Modern exhaust gas treatment systems (e.g. catalytic converters, particle filters or comparable systems) can clean exhaust gases in a way that reduces the health hazard and risk of poisoning when operating the truck.

– Observe the national laws and regulations when using trucks with an internal combustion engine in entirely or partially enclosed working areas.

– Always ensure sufficient ventilation.

Heat

DANGER

Risk of burns due to hot exhaust gases!

Exhaust gases or components that carry exhaust gases (e.g. exhaust pipes) can become so hot that direct body contact can cause burns to the skin and materials that are too close can be burnt or singed.

- Do not grasp or touch hot exhaust pipes.
- Keep combustible materials away from the exhaust pipe.
- In the event of burns, seek first aid immediately.
- If materials are burning, take appropriate fire protection measures immediately.

Radiation

In accordance with the guidelines DIN EN 62471:2009-03 (VDE 0837-471:2009-03), the SafetyLight (variant) is assigned to risk group 2 (medium risk) due to its photobiological hazard potential.

Emergency exit for models with rear window

CAUTION

If the truck is equipped with a driver's cab with doors, DO NOT open the doors until the load is placed on the floor.

When the left-hand door cannot be opened: If the truck is equipped with a driver's cab with doors and windows, the left-hand door (for driver's entrance and exit) cannot be opened due to a malfunction. In this emergency situation, the driver can exit the truck via the right-hand door.

- Push the right-hand door handle downward.
- Carefully open the right-hand door of the driver's cab.
- Watch your step and carefully get off the truck via the right-hand door.

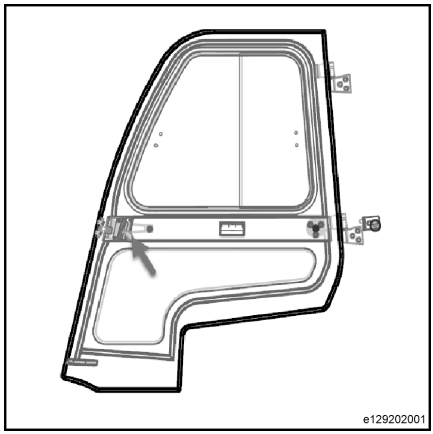

When both doors cannot be opened: If a truck equipped with front and rear windows breaks down in a narrow aisle, the driver may not be able to exit the truck from the side.
In this emergency situation, the driver can exit the truck via the rear window. For this purpose, the rear window must be broken with an emergency hammer.

- (1)The emergency hammer is located on the cab pillar behind the driver's seat.

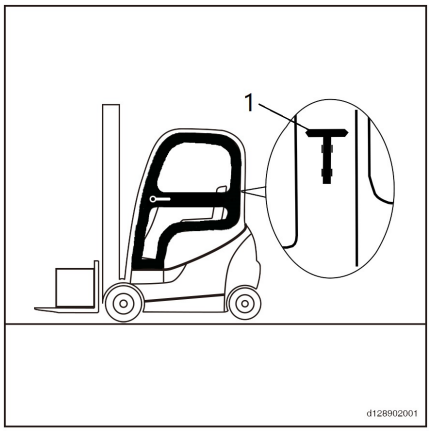

⚠ CAUTION

Glass splinters may cause injuries.

Remove glass splinters carefully.

- (1)Carefully break the rear window glass with an emergency hammer.
- Climb out carefully.

Manually lowering the fork arms with ISO

The control valve is equipped with an emergency lowering screw (1) for manual lowering of the fork carriage. This may be required if a malfunction occurs in the hydraulic system. The control valve is located under the control lever on the right-hand side of the truck and is equipped with an emergency lowering screw.

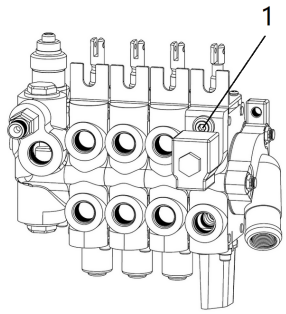

E129304016

⚠ DANGER

Do not stand in the vicinity of the forks when the fork arms are being lowered.

During lowering, leave the socket wrench on the screw on the valve block to enable lowering to be stopped at any time.

- Remove the foot plate and the joystick base cover.
- Slowly turn the emergency lowering screw about 1.5 turns anticlockwise using a hexagon socket wrench.
- Gently push the joystick until the forks are completely lowered.
- After it is lowered, turn back the emergency lowering screw clockwise with 40 Nm tightening torque. Otherwise, you cannot use the joystick to operate the fork carriage.
- Refit the foot plate and the joystick base cover.

Safety guidelines for using the truck

- The operator must be trained and qualified according to national regulations. The operator must have knowledge of the operation and performance of the truck. The operator must use the truck with due care in accordance with their driving ability and experience.
- Any defect (squeaking, leaks etc.) must be promptly reported because, if neglected, it could cause more serious malfunctions.
- Carry out the checks indicated in the "Daily checks" chapter.

ENVIRONMENT NOTE

Report any oil and/or battery fluid leaks: they are dangerous and highly polluting.

⚠ CAUTION

If you notice a burning smell, stop the truck and press the emergency stop button.

Safety regulations when driving

Driving conduct

The driver must follow the public rules of the road when driving in company traffic.

The speed must be appropriate to the local conditions.

For example, the driver must drive slowly around corners, in tight passageways, when driving through swing-doors, at blind spots, or on uneven surfaces.

The driver must always maintain a safe braking distance from vehicles and persons in front, and must always have the truck under control. Stopping suddenly, turning quickly and overtaking at dangerous or blind spots must be avoided.

– Initial driving practice must be carried out in an empty space or on a clear roadway.

The following are forbidden during driving:

- Allowing arms and legs to hang outside the truck
- Leaning the body over the outer contour of the truck
- Climbing out of the truck
- Moving the driver's seat
- Adjusting the steering column
- Releasing the seat belt
- Disabling the restraint system
- Raising the load higher than 300 mm above the ground (with the exception of manoeuvring processes during the placement into stock/removal from stock of loads)
- Using electronic devices, for example radios, mobile phones etc.

⚠ WARNING

The use of multimedia and communication equipment as well as playing these devices at an excessive volume during travel or when handling loads can affect the operator's attention. There is a risk of accident!

– Do not use devices during travel or when handling loads.

– Set the volume so that warning signals can still be heard.

⚠ WARNING

In areas where use of mobile phones is prohibited, use of a mobile phone or radio telephone is not permitted.

– Switch off the devices.

Visibility when driving

The driver must look in the drive direction and have a sufficient view of the driving lane.

Particularly for reverse travel, the driver must be sure that the driving lane is clear.

When transporting goods that impair visibility, the driver must drive the truck in reverse.

If this is not possible, a second person acting as a guide must walk in front of the truck.

In this case the driver must only move at walking pace and with extra care. The truck must be stopped immediately if eye contact with the guide is lost.

Rear-view mirrors are only to be used for observing the road area behind the truck and not for reverse travel. If visual aids (mirror, monitor) are necessary to achieve sufficient visibility, it is necessary to practise using them. For reverse travel using visual aids, extra care should be taken.

When using attachments, special conditions apply; see the chapter entitled "Fitting attachments".

Any glass (variant, e.g. windscreen) and mirrors must always be clean and free of ice.

Safety regulations in case of accidental lateral tipping

If as a result of incorrect manoeuvring the truck appears to be tipping over sideways, carefully follow the instructions below:

a) Do not leave the forklift truck.

b) Tilt your head forward and move your body in the opposite direction to which the forklift is tipping.

c) Remain firmly seated, grip the steering wheel and dig your heels in. Wait until the truck has reached a stable position before leaving the truck.

3

Overview

General view

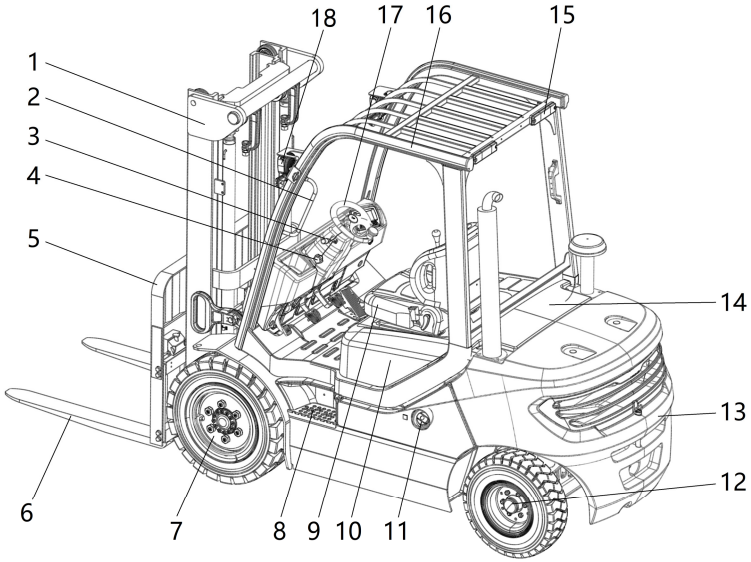

128903001

1	Lift mast	10	Bonnet
2	Handhold	11	Diesel filler port
3	Drive direction selection lever	12	Steering axle
4	Steering column adjustment screw	13	Counterweight
5	Fork carriage	14	Rear cover
6	Forks	15	Forklift rear combination lights
7	Drive axle	16	Overhead guard
8	Non-slip tread	17	Steering wheel
9	Driver's seat	18	Headlight

Controller and display unit

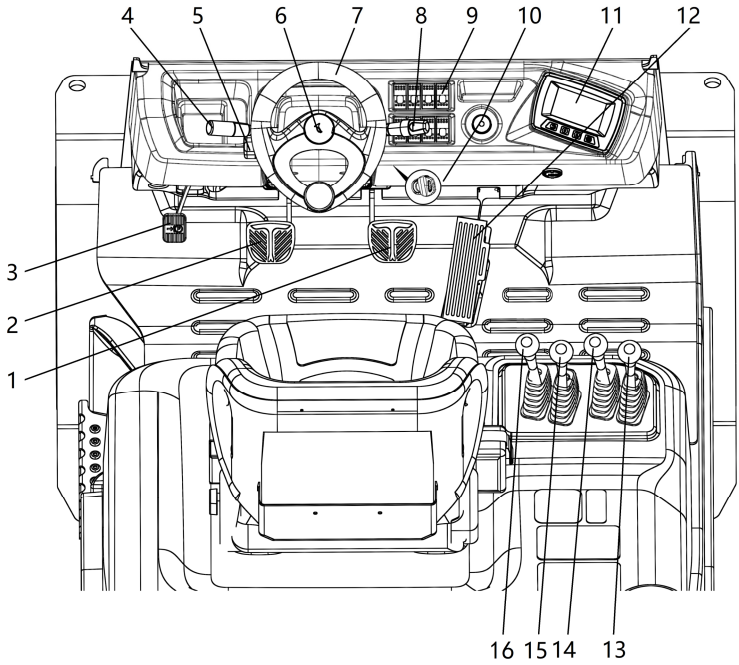

128903002b

1	Driving brake pedal
2	Inching control pedal
3	Parking brake pedal
4	Drive direction selection lever
5	Clamping screw for adjusting the steering column
6	Horn button
7	Steering wheel
8	Reversing indicator light switch
9	Switch panel
10	Key switch
11	Display unit
12	Accelerator pedal/throttle
13	Attachment operating lever (optional)
14	Attachment operating lever (optional)
15	Lifting/lowering operating lever
16	Forward tilting/back tilting operating lever

Warning Label Diagram

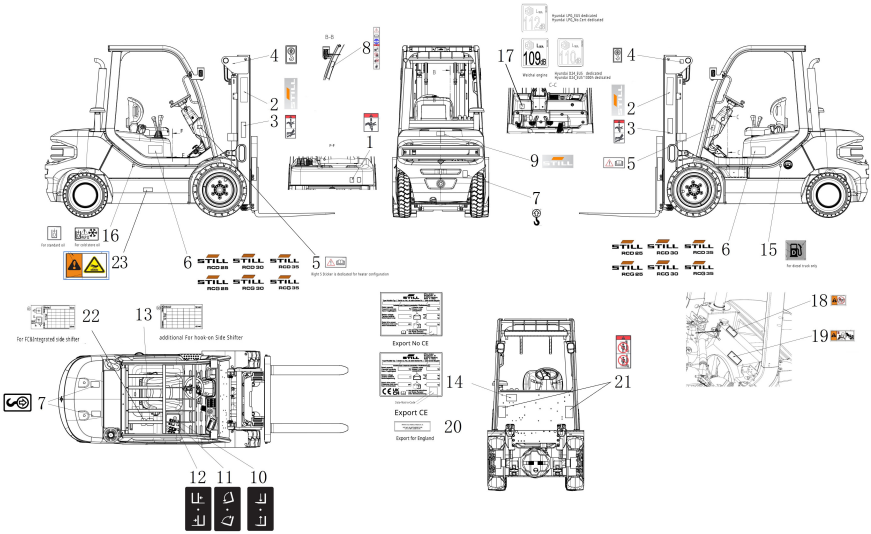

1	Label, anti-pinch	13	Capacity rating plate (For FC&Intergrated side shifter)
2	Label text, Still	14	Nameplate
3	Label, anti-pinch, prevent high pressure oil shooting injury.	15	Label, Refuel here
4	Label, Lifting points	16	Oil index signage labels
5	Label, Read the operating manual	17	Label, noise level
6	Label text, Still + truck type	18	Label, scald prevention warning
7	Label, Lifting points	19	Label, prick the hand warning
8	Label, driving warning	20	Label, UK-Importer (for use in UK only)
9	Label text, Still	21	Label, do not stand above or below the fork.
10	Label, Lifting/Lowering	22	Additional capacity rating plate (For hook-on side shifter)
11	Label, Front/Rear tilting	23	Label, Scald prevention warning
12	Label, Sideshift		

Display unit

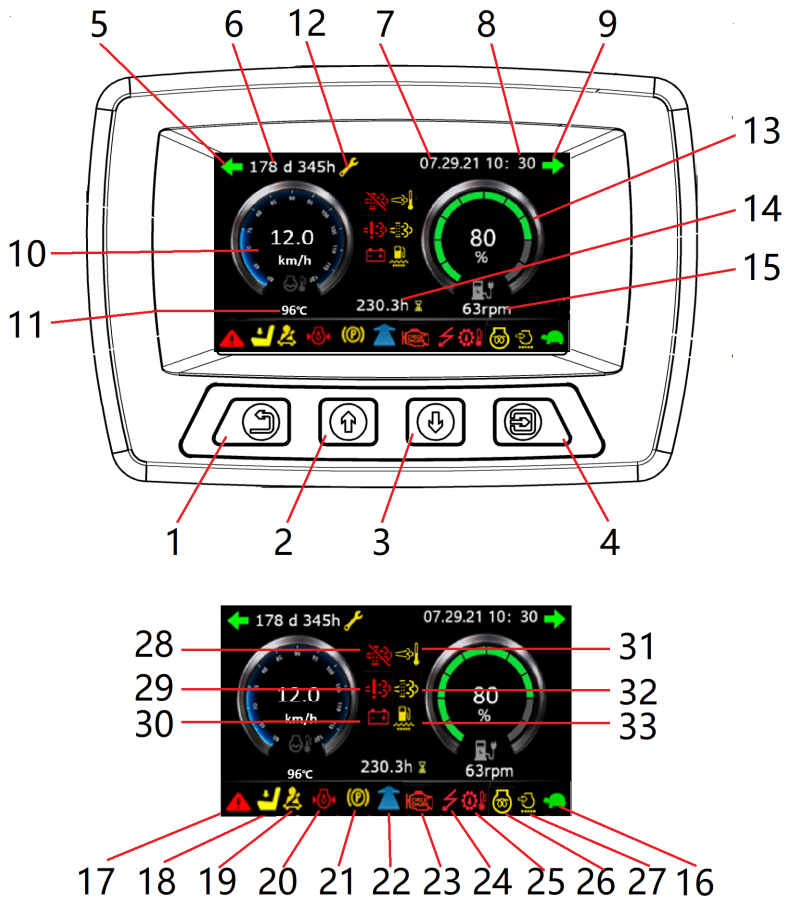

128903004

1 Back button
2 Up button
3 Down button
4 Enter/modify button
5 Left turn
6 Maintenance time
7 Date
8 Time
9 Right turn
10 Speed (For models with no KOB, the coolant temperature is shown here.)
11 Coolant temperature (For models with no KOBmodels, vehicle speed is shown here.)
12 Maintenance indicator (lights up when maintenance is due)
13 Remaining oil symbol
14 Hour meter
15 Engine speed
16 Creep speed mode
17 Error symbol
18 Driver symbol
19 Fasten seat belt symbol
20 Engine oil pressure symbol
21 Parking brake symbol
22 Drive direction
23 Engine warning symbol
24 Control unit error
25 Hydraulic oil temperature super high
26 Intake air preheating
27 Air filter alarm
28 Active regeneration prohibited
29 Abnormal emissions
30 Low charge
31 High exhaust temperature
32 Regeneration requested
33 Water trap alarm

NOTE

For gas models, the fuel quantity will be displayed as 0 on the display unit and the remaining fuel pressure will not be shown on the display unit. The remaining gas pressure needs to be obtained from the pressure gauge of the gas cylinder.

Switch panel

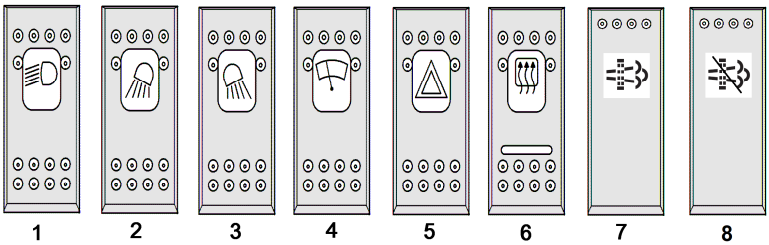

1 Standard or higher lighting
2 Working spotlight positions 3/4 or working spotlight positions 1/2 (for higher lighting)
3 Working spotlight position 7/8
4 Front windscreen wiper/rear window wiper - interval/on/wipe-wash
5 Warning lights
6 Screen heating push button
7 DPF forced regeneration
8 DPF regeneration inhibit

⚠ CAUTION

The above switches may be displayed, depending on your actual configuration.

Relays and fuses overview

Relay and fuse box installation position

– The relay and fuse box are located under the foot pedal. They can be accessed by removing the foot pedal.

▷

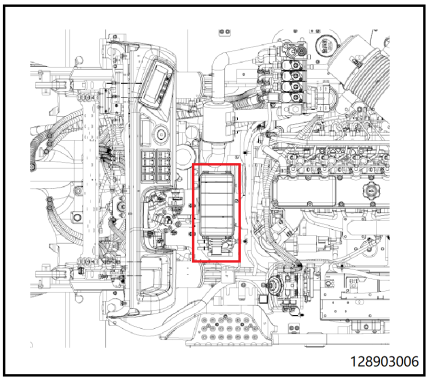

Relay and fuse definitions (Truck with WEICHAI engine, CE)

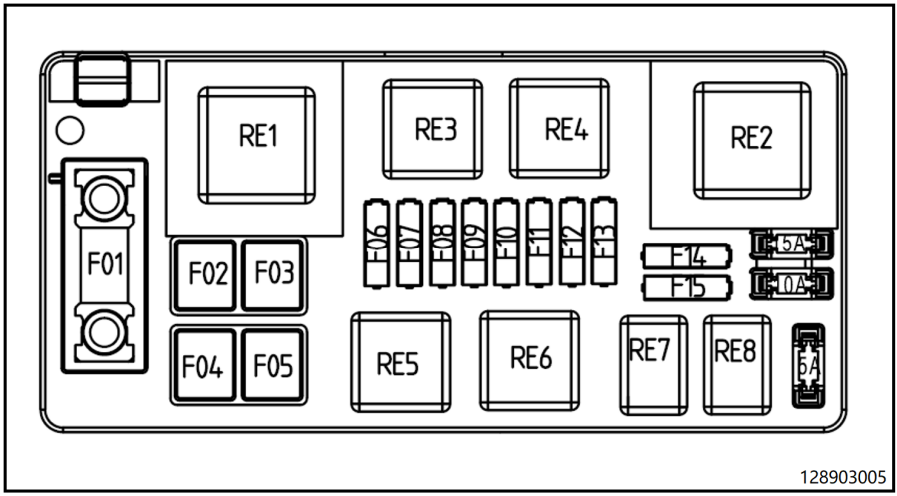

Relays and fuses overview

Relay and fuse definitions:

F1	/	/
F2	60 A/32 V	Preheating fuse
F3	40 A/32 V	FUSE-KL30
F4	40 A/32 V	FUSE-KL30
F5	/	/
F6	25 A/32 V	ECU Power
F7	10 A/32 V	Key switch fuse
F8	15 A/32 V	Main relay output
F9	15 A/32 V	Postion light
F10	10 A/32 V	Headlight fuse
F11	10 A/32 V	Switch and USB
F12	15 A/32 V	ISO or KOB
F13	10 A/32 V	Horn
F14	15 A/32 V	Starter
F15	10 A/32 V	ECU KL15
K1	70 A/12 V	Starter relay
K 2	70 A/12 V	Preheating relay
K 3	30 A/12 V	ECU main relay
K4	30 A/12 V	IG relay
K5	12 V	Flashing light relay
K6	30 A/12 V	Option Relay

Relay and fuse definitions (Truck with Quanchaiengine orWEICHAI non CE engine)

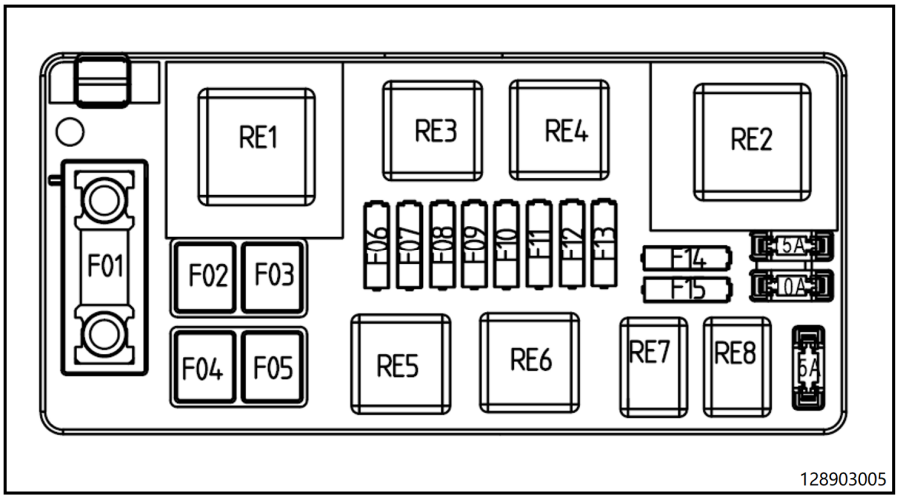

Relay and fuse definitions:

F1	/	/
F2	60A/32V	Pre-heating Fuse
F3	40A/32V	FUSE-KL30
F4	40A/32V	FUSE-KL30
F5	/	/
F6	25A/32V	ECU Power
F7	10A/32V	Key
F8	15A/32V	Main relay output
F9	15A/32V	Postion light
F10	10A/32V	Beacon
F11	10A/32V	Switch and USB
F12	15A/32V	ISO or KOB
F13	10A/32V	Horn
F14	15A/32V	Starter
F15	10A/32V	ECU KL15
K1	70A/12V	Starter Relay
K2	70A/12V	Pre-heating Relay
K3	30A/12V	ECU Main Relay
K4	30A/12V	IG Relay
K5	12V	Flasher Relay
K6	30A/12V	Option Relay

Relay and fuse definitions (Truck with HYUNDAI/Doosan engine)

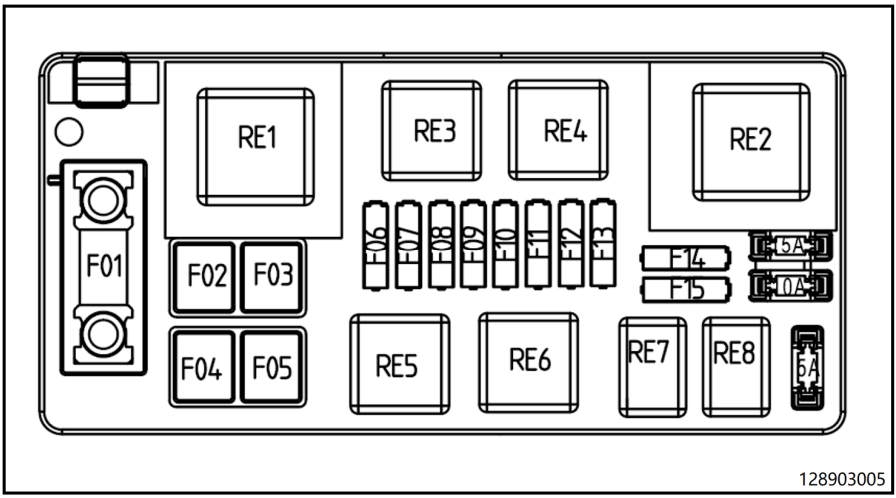

Relay and fuse definitions:

F1	120A/32V	Charging FUSE
F2	60A/32V	Pre heating
F3	40A/32V	FUSE-KL30
F4	60A/32V	START
F5	40A/32V	FULL CABIN
F6	15A/32V	MAIN RELAY
F7	10A/32V	KEY & enclosure
F8	10A/32V	Mainrelay output
F9	15A/32V	Postion light
F10	10A/32V	Beacon
F11	10A/32V	Switch & USB
F12	10A/32V	ISO
F13	10A/32V	HORN
F14	/	/
F15	/	/
K1	70A/12V	Starting relay
K2	70A/12V	Preheating relay
K3	30A/12V	ECU relay
K4	30A/12V	IG relay
K5	12V	Flash relay
K6	30A/12V	Option relay

Relay and fuse definitions (Truck with Yanmar engine)

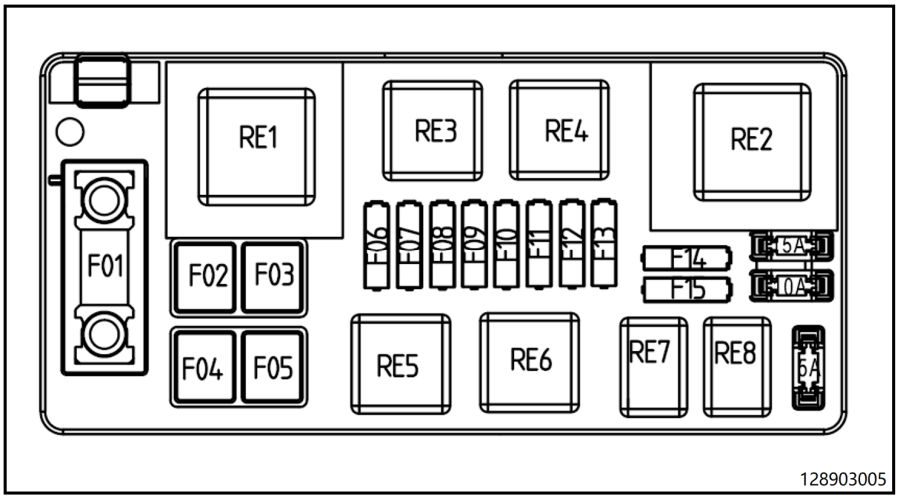

Relay and fuse definitions:

F1	100A/32V	Charging FUSE
F2	60A/32V	Preheating
F3	40A/32V	FUSE-KL30
F4	40A/32V	Fule supply
F5	40A/32V	FULL CABIN
F6	/	/
F7	10A/32V	KEY & enclosure
F8		
F9	15A/32V	Position light
F10	10A/32V	Beacon
F11	10A/32V	Switch & USB
F12	15A/32V	QGS & Speed
F13	10A/32V	HORN
F14	15A/32V	START
F15	/	/
K1	70A/12V	START relay
K2	/	/
K3	30A/12V	Fuel Supply relay
K4	30A/12V	IG relay
K5	12V	Flasher relay
K6	30A/12V	Option Relay

4

Operation

Service plan before first start

Internal combustion engine
Check the coolant level.
Check the fuel level.
Check the engine oil level.
Check the parts and wiring connections.
Check the truck for leaks (visual inspection).
Drive mechanism and transmission system
Check the drive axle/transmission gear oil level.
Check and tighten the wheel nuts.
Check the tyre pressure (if fitted with optional pneumatic tyres).
Check the functionality of the service brake and parking brake.
Check the drive functions (forward and reverse).
Check steering system functionality.
Check the brake fluid level.
Electrical system
Check the battery status.
Check electrical systems (e.g. lighting, warning equipment and other special equipment).
Check the emergency off switch.
Hydraulic system
Check the hydraulic oil level.
Lifting system
Check the functionality of the lift mast and attachments.

NOTE

If there are any problems with the inspection, contact your authorised service partner.

Instructions for running-in

The truck can be operated immediately.

However, when driving during the first 50 operating hours, avoid subjecting both the working hydraulics and the drive unit to high continuous loads.

Pre-shift checks

Carrying out the following checks as part of your daily routine will help to keep the fork-lift truck in good condition. These checks are supplemental and do not replace periodic maintenance work.

NOTE

If, when carrying out the daily checks, you discover a defect or you are unsure whether the truck will function properly, do not use the truck and contact the technical service department.

Daily inspection items

Internal combustion engine
Check coolant level, engine oil level and fuel level. Check that there is enough grease in the locations where it is needed.
Check for leakage of oil, water and air.
Check that the outer connectors and accessories are properly connected and tightened.
Check whether the fan and belt are too tight or too loose.
Check whether the exhaust temperature, colour, sound and vibration of the engine are normal and whether the rotation speed is stable.
Visually inspect the engine for black smoke. If there is black smoke, contact your authorised service partner immediately.
Empty the fuel filter/water trap.
For vehicles fitted with the NVH (Noise, Vibration and Roughness) set, check thermal insulation parts regularly. If there is any deterioration, damage, peeling or other malfunction, contact your authorised service partner immediately.
Check the exhaust gas line for leaks during use and the intake line for free flow.
Clean engine and water tank, and clear any weeds or foreign objects on intercooler surfaces. Pay particular attention to hot parts and the surfaces of electrical components. Remove dust from the air filter dust bag every day (in dusty environments, remove dust from the paper filter surface and replace the filter if necessary), as well as any debris build up inside the generator.
Drive mechanism and transmission system
Check the tyres and rims (for damage to the outline and outer zones).
Check the drive axle/transmission gear oil level.
Check the tyre pressure (if fitted with optional pneumatic tyres).
Check the parking brake is working properly.
Check the parking brake is working properly.
Check the normal operation of the inching control.
Check the steering.
Check the brake fluid level.
Driver's cab
Check the condition and functionality of the driver's seat and seat belt.
Check that the emergency off switch is working normally.
Check the steering column adjustment is secure.
Electrical system
Check that the battery is powered.
Check electrical systems (e.g. lighting, warning equipment and other special equipment).

Check the operating state of the key switch.
Hydraulic system
Check the oil level.
Visually inspect the forklift for leaks.
Lifting system
Check the safety fittings on the fork arms and carriage.
Special equipment
Check the sideshift and attachments for abrasion and correct operation (follow the procedure specified by the manufacturer).
Check the condition of the antistatic belt and earth (only when using tyres that are not antistatic).
Subsequent tasks
Carry out a functional test and test drive.

NOTE

Please contact an authorised service partner if there is any problem.

Mounting/dismounting

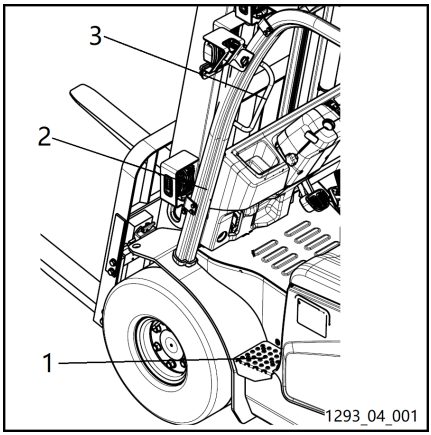

WARNING

Always face the vehicle when climbing off the forklift to prevent injury to legs and back.

NOTE

Do not grip the steering wheel or joysticks when climbing on/off the forklift.

After completing the daily checks on the forklift truck, carry out the following procedure to begin using it:

– First place your left foot on the non-slip tread (1). Grip the handhold (3) or overhead guard beam (2), and mount the truck from the left-hand side.

– Use the non-slip tread (1) and handhold (3) or overhead guard beam (2) to dismount from the left-hand side.

WARNING

Do not mount or dismount the truck from the right-hand side unless it is an emergency.

CAUTION

For safety reasons, it is not advisable to operate the forklift when the non-slip tread and floormat are removed or missing. Please ensure that the non-slip tread and floormat are clean.

Seat belt status and performance checks

Checking condition and performance

⚠ DANGER

For safety reasons, the condition and protective ability of the seat belt must be checked on a daily basis.

Do not operate the vehicle with the seat belt removed.

⚠ CAUTION

Carefully check that the retractor locking device, the seat belt locking device and the connections between the seat belt/seat and the seat/cover panel are all in good condition.

– Check the condition of the belt: pull the seat belt all the way out of the retractor and check the seat belt for damage.

⚠ CAUTION

The seat belt must be replaced if it is cracked, worn or has been damaged in an accident. When replacing a seat belt, the entire protection system must also be replaced, including the seat belt, latchplate, retractor and locking devices.

– Check the buckle locking device by inserting the latchplate of the seat belt into the buckle until you hear a click. Ensure that the latchplate, buckle and other locking devices are functioning properly.

– Carefully check the connection between the seat belt and the seat.

– Carefully check the connection between the seat and the panel cover below.

Adjusting the seat and seat belt ▷

⚠ CAUTION

An incorrect seat setting may cause damage to the driver's back.

The adjustment controls for the driver's seat should not be used during operation.

Before starting the truck and whenever changing drivers, adjust the seat to correspond to the driver's weight and make sure that the settings have all engaged properly.

Do not place any objects in the driver's working area.

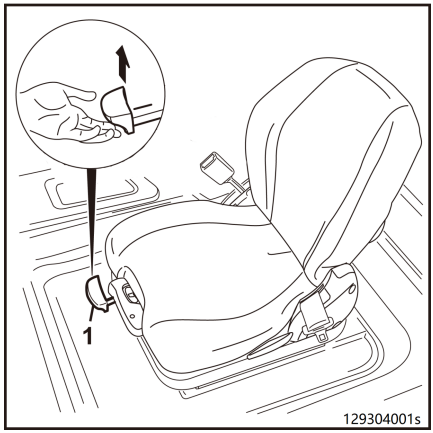

⚠ WARNING

Risk of accident from sudden adjustment of the seat or of the seat backrest! The inadvertent adjustment of the seat or of the seat backrest can lead to uncontrolled movements by the driver. The steering or the operating devices can then be actuated unintentionally. This may cause uncontrolled movements of the truck or of the load.

– Do not adjust the seat or the seat backrest while the truck is in motion.
– Adjust the seat and the seat backrest so that all operating devices can be actuated safely.
– Ensure that the seat and the seat backrest are securely engaged.

Adjusting the seat longitudinally

⚠ CAUTION

There is a risk of crushing the hand if the lever is grasped fully during adjustment.

Only grasp the handle by the guide provided for this purpose.

– Pull the adjustment handle (1) up.
– Move the seat forwards or backwards along the seat guide until the optimum position between driver, steering wheel, accelerator pedal and operating levers is found.
– Retract the adjustment handle (1).

Setting the driver's weight

NOTE

The individual driver's weight must be set with the driver sitting in the seat.

– Pull out the adjustment handle (2).

Move the adjustment handle and set the suspension spring in accordance with the driver's weight.

– The correct driver's weight has been selected when the arrow is in the centre of the inspection window (3).

Move up the adjustment handle (2) to increase the set weight.

Move down the adjustment handle (2) to decrease the weight.

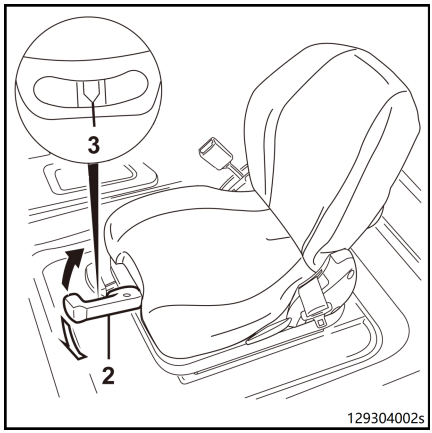

NOTE

Sitting for long periods of time puts a lot of pressure on the spine. Try to compensate for this by performing regular simple gymnastic movements.

Adjusting the seat backrest

▷

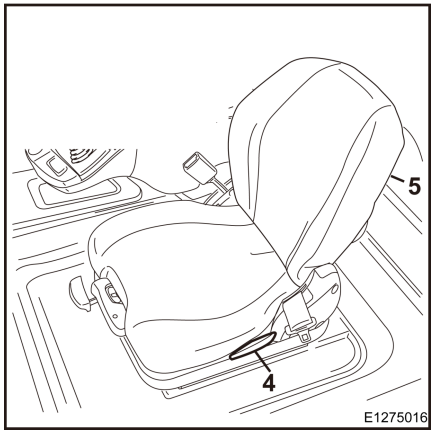

- Adjust the backrest using the seat backrest adjuster (4).
- Pull up the seat adjuster (4) and fix in place.
- Move the seat backrest (5) forwards or backwards until a comfortable position for the driver is found.
- Release the seat adjuster (4) to return the seat backrest (5) to its original position.

Fastening the seat belt

⚠ DANGER

There is a risk to life if the driver loses control of the vehicle.

The seat belt must be worn at all times that the truck is driven!

The seat belt must only be used by one person at any time.

⚠ CAUTION

The seat belt must be in working order.

Ensure that the seat belt is not twisted, stuck or knotted.

Protect the buckle and retractor to prevent foreign objects or dirt entering and to prevent damage.

NOTE

Even for the driver's cab to fully comply with driver safety systems, the driver should also wear the seat belt all the time.

- *When the truck is on a steep incline, the automatic latch on the seat belt will engage, which will prevent the wearer from unfastening the belt.*
- *The only way to disengage the automatic latch on the seat belt is to carefully level the truck.*
- *When the forklift truck is being operated (when driven or during lifting etc.), the driver should remain in the seat and lean back onto the backrest.*
- *The automatic latch in the retractor will ensure that the driver has sufficient freedom of movement when operating the truck.*

– Slowly pull the seat belt (3) out from the retractor (1).

– Place the seat belt around the waist, no higher than the abdomen.

– Press the seat belt latch plate (2) into the latch (4).

– Check the tightness of the seat belt; the belt should firmly hug the body.

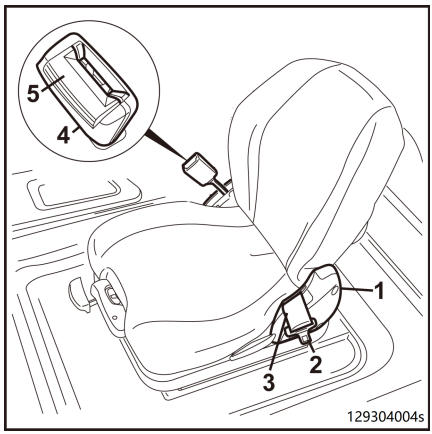

DANGER

Do not fasten the seat belt over hard or fragile items in the driver's pockets as this may result in accidents.

Do not place objects between the body and the belt.

Unfastening the seat belt

– Press the red button (5) on the seat belt latch (4) to release the seat belt.

– Manually feed the seat belt latchplate (2) into the retractor (1).

NOTE

Moving the seat belt too quickly may cause the latchplate to catch on the automatic latch and housing, thus engaging the automatic lock. In this case, the seat belt cannot be pulled out using normal force.

Seat belt monitoring and alarm function ▷

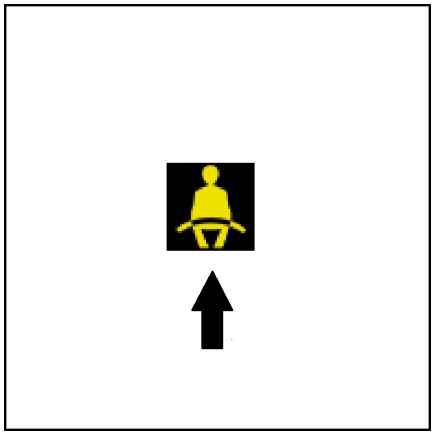

DANGER

The driver must sit in the driver's seat when operating the forklift truck.

The seat belt must be worn at all times that the truck is driven!

If the forklift truck is started without fastening the seat belt, the LED light shown by the arrow will flash on the display unit and the forklift truck can continue driving.

If the seat belt is unfastened while the forklift truck is travelling, the LED light shown by the arrow in the display unit will flash. If the vehicle speed is above 4 km/h at this time, the beeper will also sound.

Different monitoring modes can be set using the diagnostic software so that the forklift truck gradually slows down to a standstill (0 km/h) or is restricted to creep speed (2 km/h).

NOTE

The seat belt monitoring mode can be set using the diagnostic software. Please contact your authorised service partners.

CAUTION

This function is supported by trucks with conformity certification.

Operating the horn

Sound the horn as a warning signal when working on roads or intersections with low visibility.

– Press the horn button (1) on the steering wheel to sound the horn.

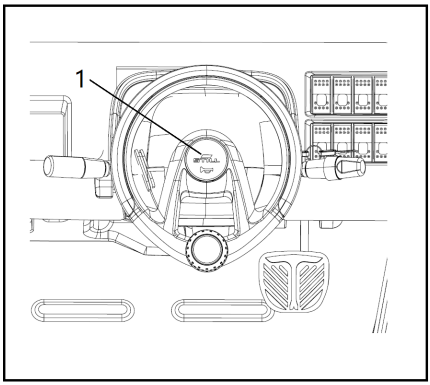

Checking the steering system for correct function

DANGER

If the hydraulics fail, there is a risk of accident as the steering characteristics have changed.

– Do not operate the truck if it has a defective steering system.

– Operate steering wheel (1). The steering play while stationary must not be more than two finger widths.

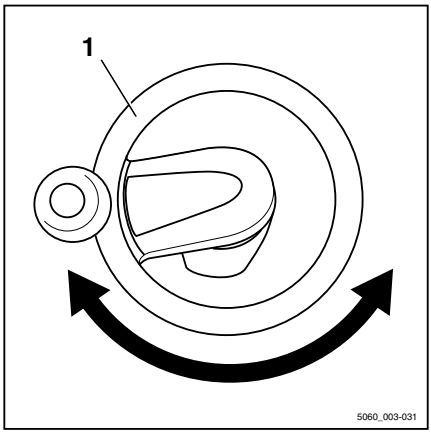

NOTE

If the truck is switched on with the steering wheel turned, the maximum driving speed is limited. Travel speed limitation is removed as soon as the steering wheel is moved out of a cornering position into the straight-ahead position. This requires a change in steering angle of about half a revolution.

Adjusting the steering column

DANGER

Safe driving is not guaranteed with the clamping screw open.

Only adjust the steering column when the truck is stationary.

Adjusting the angle

– Loosen the clamping screw (1) anti-clockwise.

– Move the steering column into the required position.

– Tighten the clamping screw (1) clockwise.

▷

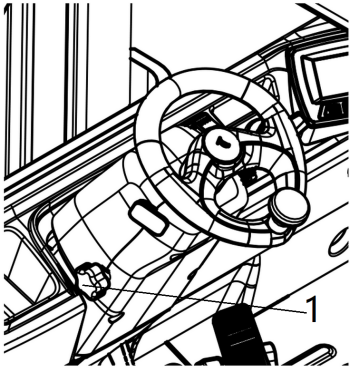

E129304005

Starting the engine

Starting the engine

⚠ DANGER

Risk of poisoning!

Do not allow the engine to run in unventilated areas.

NOTE

Where possible, avoid frequently starting and stopping the engine over short periods of time, since this prevents the internal combustion engine from reaching its operating temperature. Frequent cold starts increase wear.

– Sit on the driver's seat. ▷

– Fasten the seat belt.

– All joysticks and levers must be in the centre position (hydraulic joysticks (3) and manual direction lever (1)).

– Place your foot on the accelerator pedal (4).

– Apply the parking brake by depressing the parking brake pedal (5) (parking brake pedal must be depressed for the engine to start).

– Insert the switch key (2) into the switch. Turn the ignition key from "0" to "I".

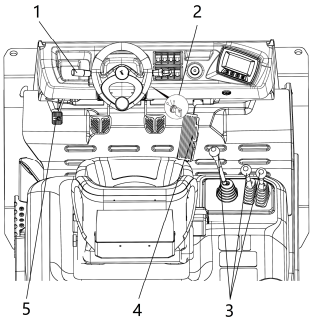

At this point, the electrical system will switch on.

– Watch the display unit. ▷

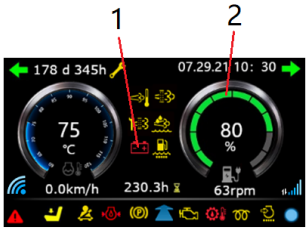

128904002

NOTE

After the ignition has been switched on, the display unit will perform a self-test. All lights on the display will come on for about 2 seconds.

The following display elements will light up:

- Built-in charger alarm light (1)
- Fuel level indicator light (2)(*for fuel truck)

NOTE

For gas truck, the fuel level indicator light show 0%, and it doesn't show the remaining amount of gas. The remaining amount of gas needs to be obtained from the pressure gauge on the cylinder

– Turn the ignition key to the "II" position.

– The built-in charger alarm light (1) goes out.

After the engine starts:

– Immediately release the ignition key.

NOTE

The following observation step only applies to forklift trucks equipped with a particle filter: if the exhaust remains very smoky, switch off the engine Please contact your authorised dealer. Every time the engine is started, watch the exhaust port for about 5 seconds.

If the engine fails to start:

When restarting the engine, wait for at least 1 minute between successive attempts to save the battery. If the engine still fails to start after three attempts, have it inspected by qualified technical personnel.

The engine speed is adjusted automatically based on the size of the load.

NOTE

Do not allow the engine to warm up by idling. Running at moderate load and varying speed will bring the engine and hydraulic system up to normal operating temperature within a short time.

Engine shutdown

CAUTION

Do not stop the engine when it is running at full load. Let it run at low speed for a few minutes first instead.

- Release the accelerator pedal (4). ▷
- Put the manual direction lever (1) in the neutral position.
- Turn the switch key (2) to the "0" position.
- Depress the parking brake pedal (5) to apply the parking brake.
- Remove the switch key (2) when leaving the truck.

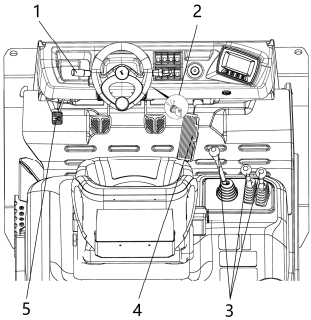

Driving

Driving

NOTE

The truck can only be driven with the driver's seat under load.

– Switch on the engine. ▷

– Gently open the fork carriage and slightly tilt the lift mast backwards.

– Release the parking brake pedal (5).

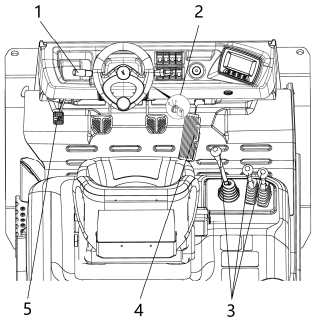

CAUTION

It is generally not permitted to drive on long gradients over 31% (unladen) due to specified minimum braking and stability values. Please contact your authorised dealer before driving on higher gradients. The climbing capability values given in the technical parameters sheet have been determined from the pulling force and only apply when overcoming obstacles on the roadway and for small height differences.

You should always adapt your driving to the conditions of the route used (unevenness, etc.), with particular regard to hazardous work areas and your load.

CAUTION

When using mirrors, ensure that the rear-view mirror is only used for monitoring the traffic behind the vehicle.

Reverse travel is therefore only permitted when looking directly behind you.

NOTE

For vehicles with CE, after the reversing lever is shifted from the central position to the forward or backward direction, the accelerator pedal or micro-pedal must be pressed before the vehicle can move.

Travelling forwards

– Put the manual reverse operating lever (1) into the forward position.

– Smoothly press the accelerator pedal (3).

The speed of the forklift truck accelerates in relation to the increase in pedal travel.

Travelling backwards

– Place the manual direction lever (1) in the reverse position.

– Smoothly press the accelerator pedal (3).

The reverse speed of the truck changes in proportion to the pedal stroke.

NOTE

When the manual direction lever is shifted into forward or reverse gear, the vehicle remains at low idling speed and may move forwards or backwards even when the accelerator pedal is not depressed.

Changing the drive direction

– Release the accelerator pedal (2) and reduce the vehicle speed.

– Apply the service brake pedal (3) until the forklift truck comes to a complete stop.

– Put the manual reverse operating lever (1) into the neutral position.

– Move the reverse operating lever (1) into the opposite direction and then depress the accelerator (2).

The forklift truck will now accelerate in the new drive direction.

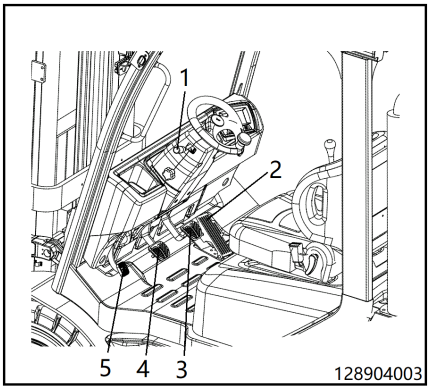

DANGER

Using the manual reverse operating lever to directly reverse the operating direction of the forklift truck during operation is strictly prohibited. Reversing direction during operation will result in damage to the forklift truck.

Inching control

Used in conjunction with the accelerator pedal, the inching control pedal enables the driver

to carry out precise and flexible truck manoeuvres on the driving surface.

With the inching control pedal, the truck can be driven slowly and carefully towards the load, even if the engine is running at full speed.

– Steadily depress the inching control pedal (4). ▷
– When fully depressed, the inching control pedal acts like a service brake.

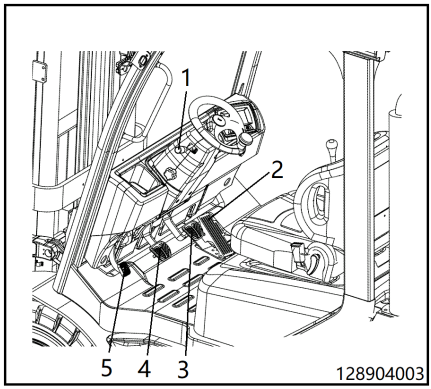

Starting on an incline

⚠ DANGER

Do not park the forklift truck on an incline. If special circumstances make it absolutely necessary to park on an incline, take precautions to protect the truck, such as using wheel chocks.

NOTE

It is recommended not to park a loaded truck on an incline with a gradient of more than 15%. When parking on an incline, apply the parking brake (5).

– Fully depress the service brake pedal (3).
– Release the parking brake pedal (5).
– Place the manual direction lever (1) in the forward direction/reverse position.
– Depress the accelerator pedal (2).
– Smoothly and gradually release the brake pedal (3).
– Slowly ease your foot off the brake pedal (3) altogether.

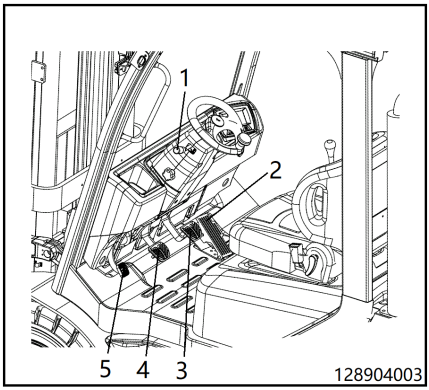

Parking

– Release the accelerator pedal (2) and reduce the vehicle speed.
– Smoothly depress the service brake pedal (3) to the fullest extent possible until the truck comes to a complete stop.
– Move the manual reverse operating lever (1) into the centre position.

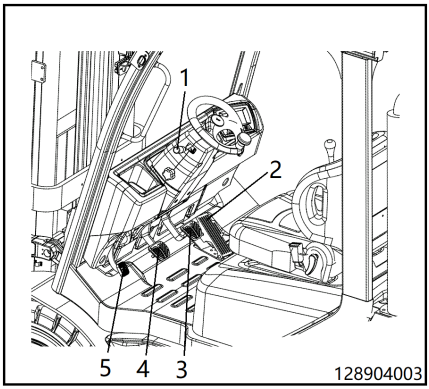

NOTE

When depressed to the fullest extent, the inching control pedal will link to the brake pedal. Depressing the inching control pedal first protects the brake linings.

– Depress the parking brake pedal (5) to apply the parking brake.
– When leaving the truck, remove the switch key.

Steering system

Steering

The hydraulic steering system enables the steering wheel to be turned with minimum effort. Its advantages are more apparent when operating in narrow aisles.

– Start the engine and switch on the forklift truck.

– Turn the steering wheel to the limit stop in both directions. ▷

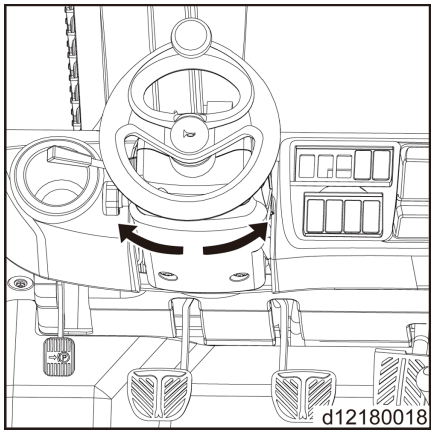

If sufficient force is applied to the steering wheel, the steered wheels can be turned while the truck is stationary, without the position of the wheels changing on the steering axle.

⚠ DANGER

The truck must not be driven if the steering system is defective.

If the steering is heavy or requires too much space, contact your authorised service partner.

Brake system

NOTE

We recommend that drivers familiarise themselves with the efficacy of the braking apparatus when the forklift truck is not carrying a load. Operate the forklift truck slowly on an uncrowded road surface to test travelling functions.

To stop when the forklift truck is moving, depress the driving brake pedal(3) until the truck comes to a complete stop.

Applying the parking brake:

– Depress the parking brake pedal (5) until the lock position is reached and the parking brake indicator light comes on.

Releasing the parking brake:

– Lightly depress the parking brake pedal (5) and then release. The parking brake will return to its original position and the parking brake indicator light will turn off.

⚠ DANGER

The forklift truck must not be operated if there are problems with the braking system.

If there is a fault with the braking system or system parts are worn, contact an authorised service partner.

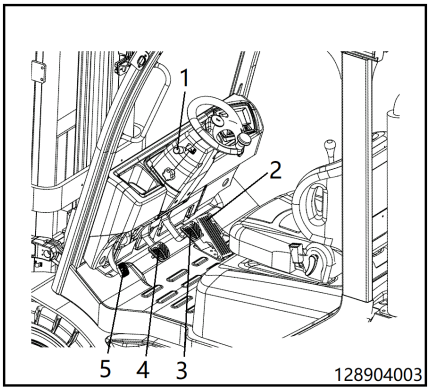

Setting the display unit

Setting the main interface

– Long press the Enter/Modify button on the display unit to access the settings page.

– The settings page contains the following four setting items:

- Display settings
- Error codes
- Supervisor login
- Service login

Press the up/down buttons on the display unit to select "Settings" on the toolbar.

Through the "Settings" interface, users and technicians can configure more settings.

▷

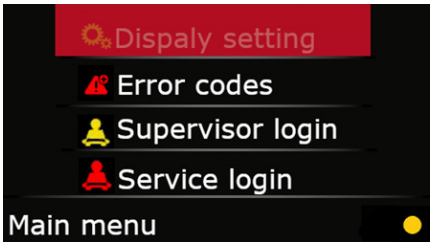

Display settings

Press the Enter button to open the "Settings" menu, press the up/down buttons to select "Display settings", then press OK to enter the next level submenu.

– Access the "Language" settings menu to change the language. (e.g. English, Chinese, Spanish etc.)

▷

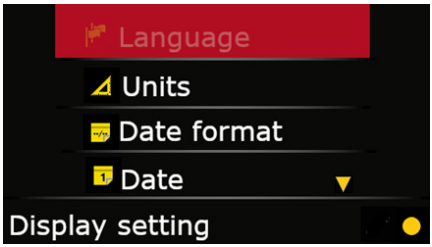

– Access the "Units" settings menu to change the measurement system. (Metric/Imperial)

▷

Setting the display unit

– Access the "Date format" settings menu to change the date format. (month.day.year 24-hour, day.month.year 24-hour, month/day/year 12-hour) ▷

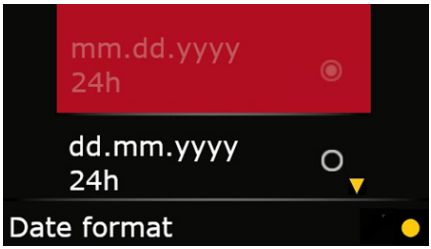

– Access the "Date" settings menu to change the date. ▷

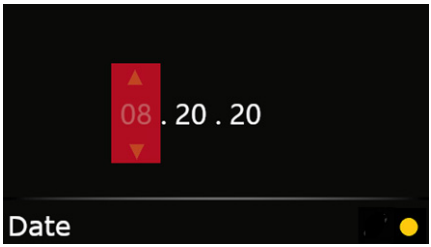

– Access the "Time" settings menu to change the time. ▷

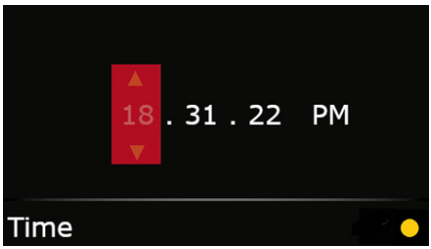

– Access the "Backlight" settings menu to adjust the display brightness. ▷

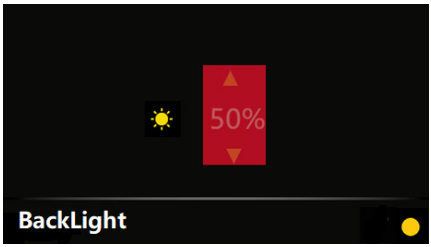

– Access the "system information" to read the system information of the display unit, such as the vehicle model and the software version of the display unit.

▷

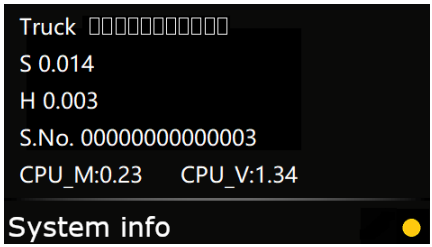

NOTE

The "Display settings" are settings for use by customers, whereas the other settings are for use by technicians.

Bonnet — Open - Closed

CAUTION

In certain special circumstances, opening the bonnet may interfere with the steering wheel, hydraulic joystick, driver's cab rear window and the upper rear section of the truck's overhead guard. Adjust the driver's seat, steering column or joystick accordingly to remove interference.

Opening the bonnet

NOTE

Before doing this, be sure to remove any loose items from the bonnet or from under the driver's seat.

NOTE

If necessary, adjust the steering column, driver's seat or other parts when opening the bonnet.

CAUTION

Do not lean over the bonnet. The bonnet will pop open to a certain height.

– Push the bonnet up until it engages in the limit position.

NOTE

Make sure that the bonnet is fully open when leaning to perform operations.

NOTE

*If a fully enclosed driver's cab (*optional) is installed, the bonnet must be opened. The rear window of the driver's cab must be opened first. This is to prevent the seat from striking the rear window. If the cab rear window does not open, adjust the seat to the most forward position before opening the bonnet.*

CAUTION

After opening the bonnet, make sure that the gas spring is free from faults, to prevent the bonnet from accidentally closing and causing personal injury in the event that the gas spring fails.

Closing the bonnet

CAUTION

Do not sit on the bonnet: risk of injury or damage.

Before closing the bonnet, please ensure that there is no risk of injury to anyone else in the vicinity.

– Lock the latch by pressing the bonnet down until the latch makes a locking sound.

Gas spring with locking function — optional

CAUTION

For vehicles equipped with gas spring and locking function, the gas spring will automatically lock after opening, to prevent the bonnet from closing suddenly and causing accident or injury.

– For vehicles with this function, when you need to close the bonnet, press the orange plastic unlock button on the gas spring of the bonnet.

– The bonnet can then be closed.

▷

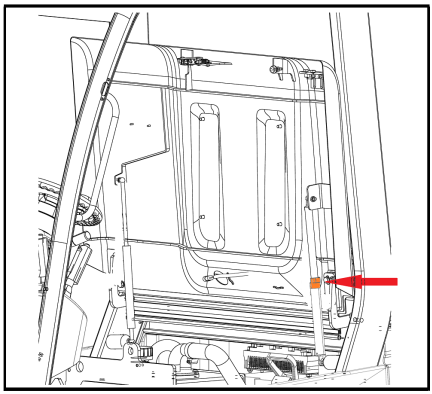

Diesel Particulate Filter Regeneration (For Eu5 Truck)

Overview

The DPF (Diesel Particulate Filter) system serves to prevent particulate matter (PM) in emissions from being discharged into the air.

The DPF serves to filter out soot, a contaminant found in the emissions of diesel engines. An excessive build-up of soot in the DPF leads to issues such as a drop in engine power due to increased back pressure in the engine, making it crucial to perform regeneration in order to eliminate PM in the DPF. After DPF regeneration, only ash remains in the DPF. DPF regeneration comprises forced regeneration while driving (Active Regeneration) and forced regeneration (Manual Regeneration) performed by the driver (Forced Regeneration).

DPF Lamp and Switch

– High Exhaust System Temperature Lamp(1) ▷

This lamp notifies the driver when hot exhaust gas is being discharged from the engine during DPF regeneration. Be sure to keep the area around the exhaust manifold free of flammable materials.

– DPF Lamp(2)

This lamp turns 'Blinking' either in case forced regeneration is needed or service regeneration is needed.

This lamp turns 'On' when forced regeneration is started or service regeneration is started.

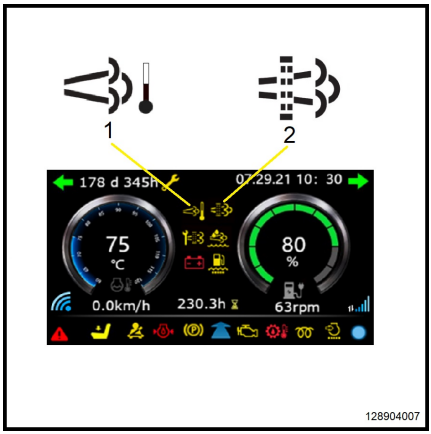

– **Forced Regeneration (Manual Regeneration) Switch** ▷

The driver can use these switches to initiate or stop forced regeneration. The switch is for forced regeneration

Press the forced regeneration switch for 3 seconds to start the forced regeneration.

Press the forced regeneration switch again during the DPF forced regeneration process and the forced regeneration will stop.

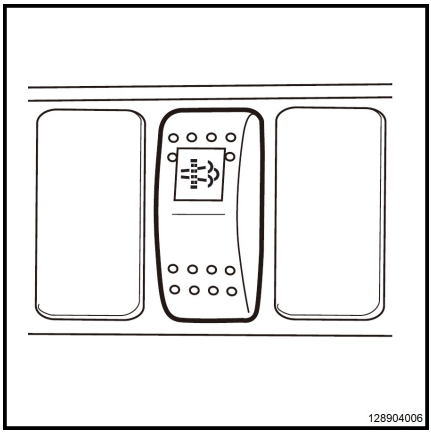

NOTE

Do not press the forced regeneration switch for more than 30 seconds, after more than 30 seconds, the engine ECU will think that the switch card is stagnant, and the engine will report a fault.

– **Regeneration Inhibit Switch** ▷

The driver can use these switches to disable the forced regeneration.

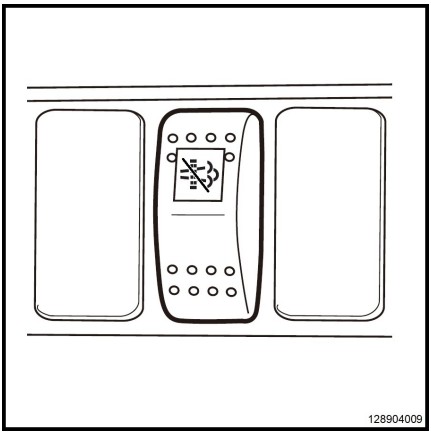

– Press the regeneration inhibit switch for 1 to 9 seconds to disable the forced regeneration and the regeneration inhibit sign will light up on the display. ▷

– Press the regeneration inhibit switch again for 1 to 9 seconds to restore forced regeneration and the regeneration inhibit sign on the display will go off.

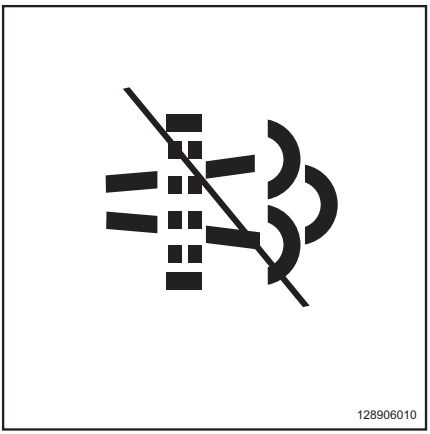

NOTE

Do not press the forced regeneration switch for more than 10 seconds, after more than 10 seconds, the engine ECU will think that the switch card is stagnant, and the engine will report a fault.

DPF Regeneration Strategy

DANGER

Risk of combustion and explosion!

It is not permitted to handle fuel while regeneration is in progress (e.g. refuelling the truck).

Diesel Particulate Filter Regeneration (For Eu5 Truck)

WARNING

During regeneration, high temperatures occur in the particle filter, in the exhaust system and in the surrounding area.

Do not operate the truck in the vicinity of combustible materials. Do not touch: risk of burns.

- Each day, check that the exhaust gas routing is clean. Clean as required.
- When operating the truck, look out for leakage in the exhaust system. If there is any leakage, shut down the truck. Contact your service partner.

NOTE

Before regeneration, ensure that there is sufficient diesel fuel in the tank. If is not sufficient, top up the fuel before starting regeneration.

DPF regeneration consists of active regeneration which occurs while driving and forced regeneration which is activated manually by the driver. When the DPF soot level is less than 105%, active regeneration is activated automatically while driving. However, at 105% or higher, the system notifies the driver that forced regeneration must be performed manually. At the same time active regeneration is try to start up to 120% soot level. At 120% or higher, the engine warning lamp turns on, engine power drops 50%, and the driver must call for service.

The DPF regeneration modes are divided into the following five stages depending on the level of soot build-up in the DPF.

NO.	Soot Quantity	DPF Lamp*	Check Engine Lamp	Torque-derate	Remark
1	Below 99%	Off	No	No	No action (Passive regeneration dependent on machine CUP)
2	100% ~ 105%	Off	No	No	To start active regen. With high temp. (560 ~ 640°C) during running
3	106% ~ 110%	Slow Blink	No	No	Forced regeneration inducement (Alarm only) To start active regen. With high temp. (560 ~ 640°C) during running

4	111% ~ 120%	Slow Blink	On	Mild Torque derate	Forced regeneration inducement (Torque de-rate) To start active regen. With high temp. (560 ~ 640°C) during running
5	Above 121%	Fast Blink	Blink	Severe Torque derate	Regeneration is disabled. Service call be needed for starting service regeneration by a service tool to release Torque de-rate.

- 1) Soot level less than 100%: Normal operating conditions
- 2) Soot level 100 ~ 105%: Automatic regeneration during operation (Active Regeneration)
- 3) DPF soot level 106 ~ 110%: Forced regeneration is induced + Active regeneration is try to start. Notify the driver that forced regeneration needs to be performed.
- 4) DPF soot level 111 ~ 120%: Forced regeneration is induced + decrease in engine power and Active regeneration is try to start. Notify the driver that forced regeneration needs to be performed.
- 5) DPF soot level 120% or higher: Regeneration is not possible / must call for service to regenerate the DPF

Active Regeneration

– This regeneration mode is performed automatically by the ECU in order to regenerate the DPF. During regeneration, high exhaust system temperature lamp(1) turn is on to warn the driver of the hot exhaust gas.

– At this time, normal operation is possible, although with caution for safety. Once regeneration is complete after 20 ~ 30 minutes, high exhaust system temperature lamp turn off.

▷

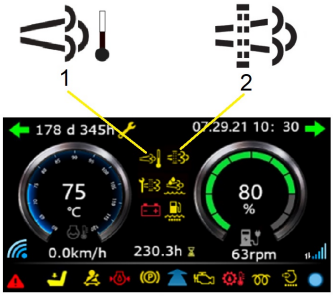

128904007

NOTE

Turning the engine off during regeneration (i.e. while the high exhaust system temperature lamp is turned on) may have a severe impact on the DPF. Hence, do not turn the engine off while the DPF lamp and high exhaust system temperature lamp are turned on except in emergencies.

- *When the soot level reaches the specified level in the simulation*

Forced regeneration (Manual Regeneration) mode

This regeneration mode is performed by the driver with the vehicle stopped in the event that DPF regeneration is not performed while the vehicle is in operation. Forced regeneration (Active Regeneration) may not be performed under the following operating conditions, so the driver must perform forced regeneration (Manual Regeneration) according to vehicle warnings as befits the circumstances.

- Working repeatedly under a low load or driving at low speeds over short distances.
- Frequent idling.

Conditions for forced regeneration (Manual Regeneration):

- 1) Coolant (engine oil) temperature: 40° or higher
- 2) Engine rpm: Idling
- 3) Parking brake engaged

Order of forced regeneration (Manual Regeneration):

– 1) Stop the vehicle. (Be sure to stop the vehicle in a safe place as the exhaust temperature will increase.)

– 2) Set the engine to an idling rpm.

– 3) Lower the safety lever.

– 4) Press the forced regeneration switch for 3 seconds to start the forced regeneration..

– 5) The engine rpm increases from idling to high idle rpm (varies depending on the model) and regeneration begins.

▷

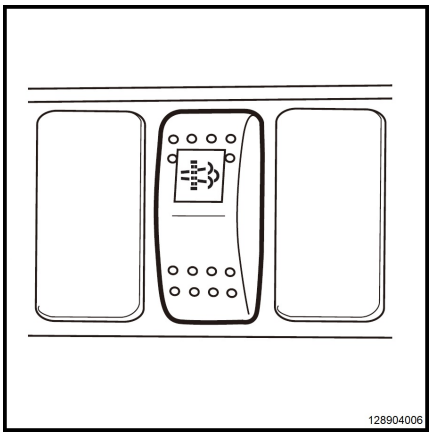

- 6) Forced regeneration (Manual Regeneration) is performed for 30 ~ 40 minutes. (May take longer depending on the above-mentioned forced regeneration (Manual Regeneration) conditions). The DPF lamp (2)and high exhaust system temperature lamp(1) turn on. ▷

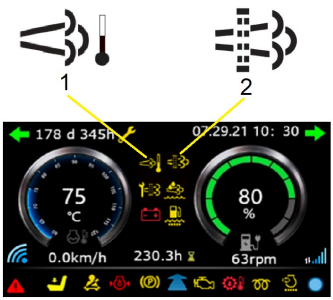

128904007

- 7) The engine rpm drops to an idling rpm.
- 8) The DPF lamp and high exhaust system temperature lamp turn off.

Lifting devices and attachments

Operating the lifting device

⚠ WARNING

There is a risk of being trapped between parts due to the movement of the lift mast or attachments.

Never stand near or enter the lift mast, or the area between the lift mast and the truck.

Use the lift mast and attachments in an appropriate and correct manner.

The driver must be trained in the use of the lift mast and attachments.

Be aware of the maximum lift height of the mast.

The control lever must be operated slowly and steadily.

Lifting, lowering and tilting speeds depend on the control lever's range of motion.The control lever will automatically return to neutral position once released.

NOTE

For trucks fitted with optional ISO functionality, the lifting system and attachments only function when the truck is switched on and the driver's seat is occupied (seat switch is actuated).

– Take note of the operating symbols marked with arrows. ▷

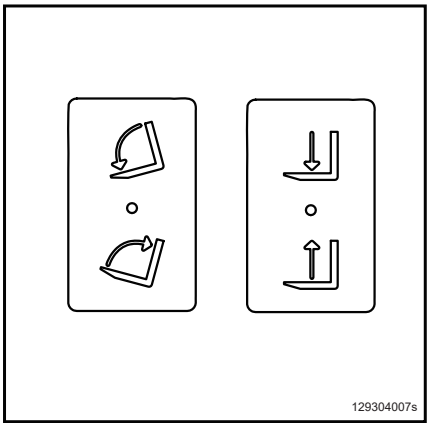

Lifting the fork carriage

– Push lever (1) back.

Lowering the fork carriage

– Push lever (1) forwards.

Tilting the lift mast forward

– Push the lever (2) forwards.

Tilting the lift mast backwards

– Pull lever (2) back.

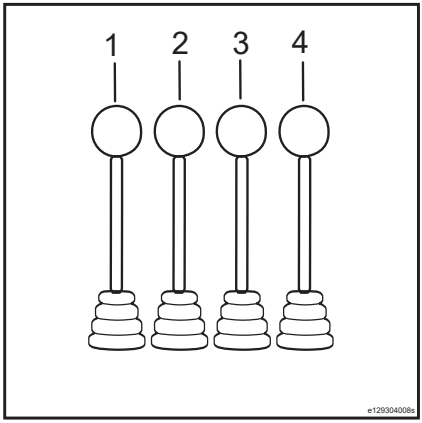

⚠ DANGER

There is an increased risk of falling and tilting when the lift mast is lifted.For this reason, do not step onto the raised fork carriage.

⚠ CAUTION

Do not stand on the fork arms during lifting.

Danger of falling or being hit.

Operating attachments

Attachments are fitted to the truck as optional extras:(sideshift forks, rotators and tensioning devices etc.).Do not exceed the working pressure of the attachments during operation. Comply with operating instructions for the use of the attachments.One or two additional control levers can be fitted to operate the attachments.

NOTE

Below is a description of attachment operations. The forklift truck can be configured with different joysticks.

NOTE

After installing each attachment, a label should be attached to the battery cover specifying the truck's load capacity after the installation. An attachment operating note should also be attached to the back of the attachment operating lever.

– Take note of the operating symbols with arrows. ▷

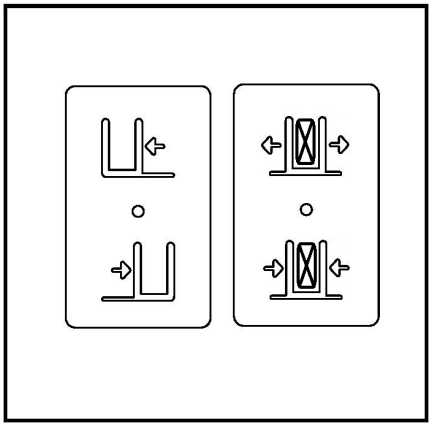

Sideshift operation

– Push the control lever (3) forwards to move the fork carriage to the left. ▷
– Pull the control lever (3) back to move the fork carriage to the right.

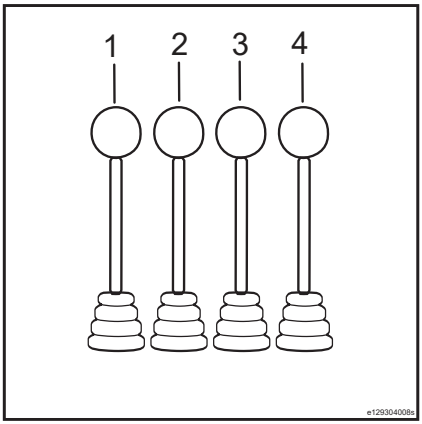

Operating the clamp

– Push the control lever (4) forwards to release the clamp.
– Pull the control lever (4) back to engage the clamp.

⚠ CAUTION

If the attachment was not supplied with the truck, it can be used only if verified by your authorized service partners, and if safe operation, in terms of load capacity and stability after installation, is guaranteed.

Transporting loads

Load centre distance and load capacity

Before lifting goods, the relationship between the weight, load centre of gravity distance and maximum lift height of the goods must be understood.

– Load centre distance refers to the distance between the vertical plane of the fork arms and the centre of gravity of the loads (1).

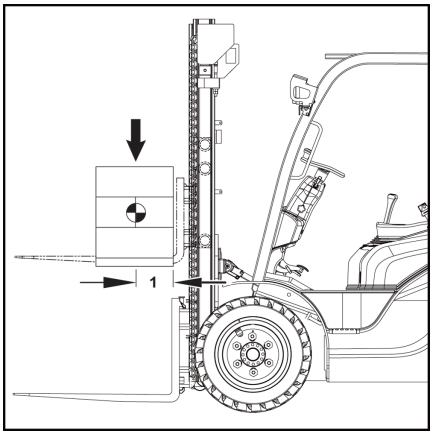

NOTE

The centre of gravity is not necessarily located at the centre of the load.Load capacity refers to the weight of loads that can be safely lifted to a required height within the given load centre distance.

Capacity rating plate

Before loading

Before lifting any load, please read the information on the truck's capacity rating plate.

DANGER

Risk of loss of stability.

The parameters on the capacity rating plate apply to compact, uniform loads. These load limits must not be exceeded. Exceeding the load limits will affect the stability of the forklift truck and the strength of the fork arms and lift mast.

If the truck is equipped with attachments, please read and follow the information on the additional capacity rating plate of each attachment (refer to the "Additional capacity rating plate" chapter for details).

Transporting loads

The load capacity of a truck depends on:

- Type of the lift mast (standard, duplex, triplex)
- Lifting height of the installed lift mast
- Tyres of the front axle
- Whether attachments or additional equipment are used
- Maximum permissible backward tilting angle of the lift mast
- Size and load capacity of the fork arms
- Size of load, offset in gravitational or geometric centre

If one of these parameters is changed, this can have a considerable effect on the load capacity.

If the truck has been modified, the load capacity rating must be determined again, and it may be necessary to replace the capacity rating plate.

– Please contact your authorised service partners.

NOTE

The truck's load capacity will also be restricted under the following circumstances:

- *Transporting loads in level 6 or greater winds*

The maximum permissible load capacity is dependent on the load centre of gravity distance (the distance between the load's gravity centre and the vertical plane of the fork arms), the height of the gravity centre and the lift height.

NOTE

The capacity rating plate below is only an example.

Capacity rating plate

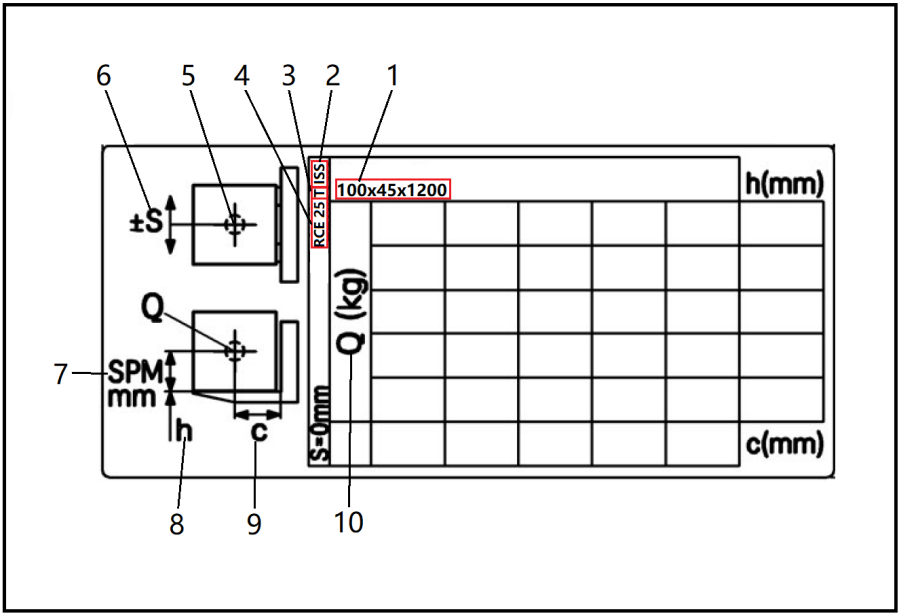

1	Fork arms dimensions: Maximum width, maximum thickness and maximum length, in mm Note: If larger fork arms are used, an additional capacity rating plate is required. Please contact your authorised service partners.
2	Identification of attachments: Integral sideshift (ISS), suspended sideshift (SS)
3	Lift mast types: Standard lift mast S, duplex lift mast D, triplex lift mast T
4	Truck model name
5	Symbol of load gravity centre
6	Maximum permissible side shift
7	Height from the load's gravity centre to the bottom edge of the load, in mm
8	Lift height (unit: mm)
9	Load centre of gravity distance refers to the distance between the vertical plane of the fork arms and the centre of gravity of the loads in millimetres.
10	Maximum load in kg

Load capacity example:

Load centre of gravity distance: 600 mm (9).

Load lift height: 4145 mm (10).

– Locate the intersection of the column of the 600 mm load centre of gravity distance and the row of the 4145 mm lift height.

In this example, the maximum permissible load capacity is 2000 kg (11).

Follow the same steps for other lift heights and load centre of gravity distances. The determined value is based on two fork arms and uniformly distributed central loads.

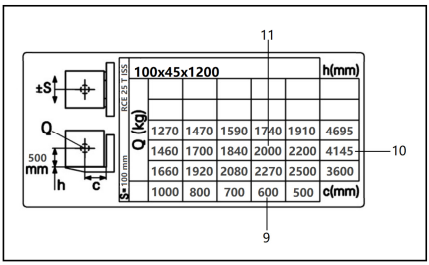

NOTE

It is permitted to use a calculated (interpolated) value between two known adjacent values. It is not permitted to use H, Q and c values that are greater than the speficied value or c values that are smaller than the speficied value. If you need to use out-of-range values, please contact your authorised service partners.

Additional capacity rating plate

DANGER

Risk of loss of stability.

Using attachments will restrict the load capacity. Therefore, an additional capacity rating plate must be attached to a position that is visible to the driver.

If the plate is missing, or if any information about the truck, attachments and load capacity does not match the actual value, please contact your service partner.

Using attachments may affect the permitted maximum driving speed. When replacing attachments, be sure to always check the permitted maximum driving speed and make necessary adjustments. Alternatively, you can set the truck to permanently drive at the lowest allowable speed.

If preassembled fork carriage is used, then the relevant values on the additional capacity rating plate should be further reduced.

– Please contact an authorised service partners to determine the truck's new load capacity.

NOTE

The additional capacity rating plate has different data for different truck series, lift mast series, and attachments. Please refer to the "Capacity rating plate" chapter on how to read the additional capacity rating plate.

Adjusting the fork spacing ▷

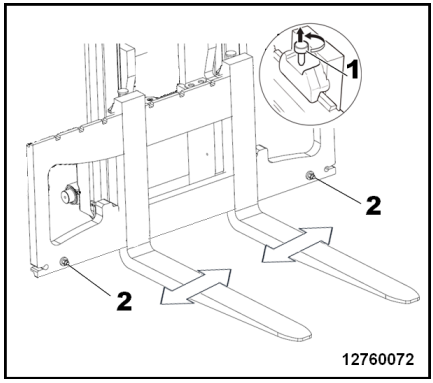

DANGER

If the fork arms/locking bolts are not fully engaged, the fork arms may come off unexpectedly.

DANGER

There is a risk of death from falling fork arms.

- If there are mounting screws (2), tighten the locking screw every time the fork arms (2) are replaced.
- Do not drive or transport loads without locking the screws (2).

- Lift the pallet locking bolts and turn them (1) 90° to unlock the bolts. The fork arm spacing can then be adjusted.
- Adjust the fork arm spacing based on the load dimensions.
- Note that the forks must be equidistant from the centreline of the fork carriage.
- After adjusting, return the fork arm lock bolts to their original positions and fit into the notches on the fork carriage, so that the fork arms are unable to move.

CAUTION

The fork arms are heavy! Exercise extreme caution when handling them.

When adjusting fork arm spacing, lean against the shelf. When you are standing securely, push the forks with your feet to adjust them. Do not adjust the forks using your hands.

NOTE

The load must be centred between the forks.

Picking up a load

⚠ DANGER

Fall and crush hazard

Standing on the fork arms is strictly prohibited.

It is strictly prohibited to use the forks, pallets or other devices for lifting people (as required by Chinese regulations).

National regulations for the location of use must be observed. The truck can be equipped with an approved working platform for lifting people, if permitted by national regulations in the location of use. Please contact your local authorised service partner.

⚠ DANGER

Danger due to falling load. Risk of fatal injury in the extension area of the lift mast.

When transporting loads, there must be no one in the danger area.

When stacking and unstacking, people must not stand or walk under a raised load.

Always keep the load lowered and the mast tilted backwards when driving forklift trucks. Look out for people.

⚠ DANGER

When a load is raised, it is not permitted for anyone to stand beneath the suspended load.

⚠ DANGER

Incorrectly positioned loads pose a risk of falling.

Loads should be arranged so that they do not project beyond the truck loading area and cannot slip, topple over or fall off. If there is a risk of small-sized loads falling between the crossmembers of the overhead guard, use an appropriate load backrest or install a guard grille on the overhead guard.

Make sure that there is sufficient room for extension above the lift mast.

⚠ DANGER

There is a risk of crushing as the lift mast or attachments may move.

For this reason, never reach into or enter the lift mast, or the area between the lift mast and the forklift.

The lifting system and attachments should only be used for their intended purpose.

Drivers must be instructed in the operation of the lifting system and attachments.

Take note of the maximum lift height.

⚠ DANGER

Overloading and tipping hazard

Strictly adhere to the permissible load indicated on the load rating plate.

⚠ DANGER

Risk of tipping!

– Do not tilt the lift mast backwards with the load raised and when the lift height is high.

Transporting pallets

As a rule, loads (e.g. pallets) must be transported individually. Transporting multiple loads at the same time is only permitted:

- when instructed by the supervisor and
- when the technical requirements have been met.

The driver must ensure proper condition of the load. Only safely and carefully positioned loads may be transported.

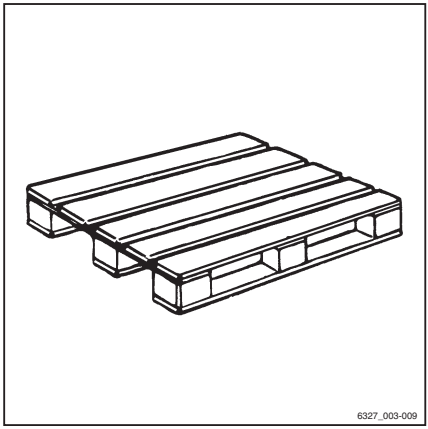

Transporting suspended loads

Before transporting suspended loads, consult the national regulatory authorities (in Germany, the employer's liability insurance associations).

National regulations may place restrictions on these operations, e.g. in Italy. Contact the relevant authorities.

If there are no country-specific regulations for suspended loads in the country of use, the following instructions for safe handling must be observed.

⚠ DANGER

Suspended loads that begin to swing can result in the following risks:

- Impaired braking and steering movement
- Tipping over the load wheels or drive wheels
- Tipping the truck at right angles to the drive direction
- Risk of crushing of guide persons
- Reduced visibility

⚠ DANGER

Loss of stability!

Slipping or swinging suspended loads can lead to a loss of stability and cause the truck to tip over.

– When transporting suspended loads, observe the following instructions.

Instructions for transporting suspended loads:

- Swinging loads must be prevented by using the proper driving speed and driving style (careful steering, braking).
- Hanging loads must be hooked on to the truck in such a way that the harness cannot shift or release unintentionally and cannot be damaged.
- When transporting suspended loads, suitable aids (e.g. guy wires or supporting poles) must be available so that accompanying persons can guide suspended loads and prevent the loads from swinging.
- Take particular care to ensure that there is no one in the drive direction in the driving lane.
- If, despite this, the load begins to swing, ensure that no person is placed at risk.

⚠ DANGER

Risk of accident!

When transporting suspended loads, never perform or end driving and load movements abruptly.

Never drive on slopes with a suspended load.

Transporting containers holding fluids as hanging loads is not permitted.

Picking up a load

⚠ DANGER

There is a risk to life caused by a falling load or if parts of the truck are being lowered.

– Never walk or stand underneath suspended loads or raised fork arms.

– Never exceed the maximum load values specified on the capacity rating plate. Otherwise, stability cannot be guaranteed.

– Only store pallets that do not exceed the specified maximum size. Damaged loading

equipment and incorrectly formed loads must not be stored.

– Attach or secure the load to the lifting accessory so that the load cannot move or fall.

– Store the load so that the specified aisle width is not reduced by protruding parts.

– Approach the rack carefully, brake gently and stop just in front of the rack.

▷

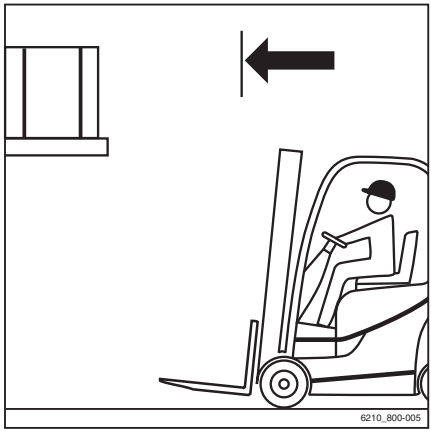

– Position the forks.

▷

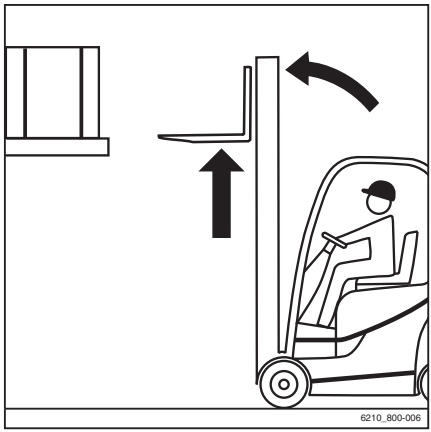

NOTE

The tilt speed of the lift mast in this truck is significantly higher than for previous products in this series. This is signalled by a warning message shown on the display and operating unit after the key switch has been switched on.

– Set the lift mast to vertical.

– Lift the fork carriage to the stacking height.

⚠ CAUTION

Risk of component damage!

When inserting the fork into the rack, ensure that the rack and load are not damaged.

– Insert the fork as far under the load as possible. Stop the truck as soon as the fork back is resting on the load. The load centre of gravity must be midway between the fork arms. ▷

– Lift the fork carriage until the load is resting entirely on the fork. ▷

⚠ DANGER

Risk of accident!

– Beware of any people in the danger area.

⚠ CAUTION

Risk of component damage!

– Ensure that the roadway behind you is clear.

– Reverse carefully and slowly until the load is clear of the rack. Brake gently.

⚠ DANGER

Due to the risk of tipping, never tilt the lift mast with a raised load!

– Lower the load before tilting the lift mast.

– Lower the load while maintaining ground clearance. ▷

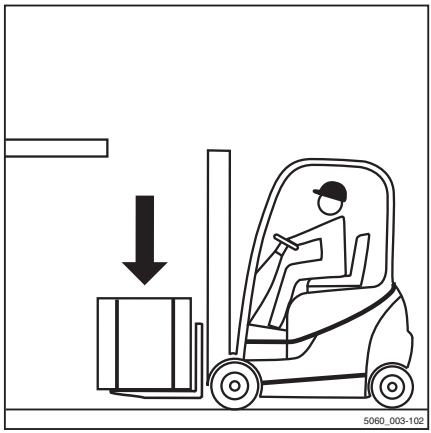

– Tilt the lift mast backwards. ▷

The load can be transported.

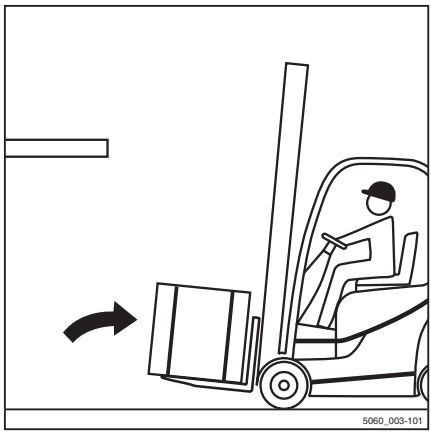

Transporting loads

NOTE

Observe the information in the chapter entitled "Safety regulations when driving".

DANGER

The higher a load is lifted, the less stable it becomes. The truck can tip over. The load can fall. There is an increased risk of accidents.

Driving with a raised load and the lift mast tilted forward is not permitted.

- Only drive with the load lowered.
- Lower the load until ground clearance is reached (not over 300 mm).
- Only drive with the lift mast tilted backwards.

- Drive slowly and carefully around corners.

NOTE

Observe the information in the chapter entitled "Steering".

- Always accelerate and brake gently.

NOTE

Observe the information in the chapter entitled "Operating the service brake".

– Never drive with a load protruding to the side (e.g. with the sideshift)!

▷

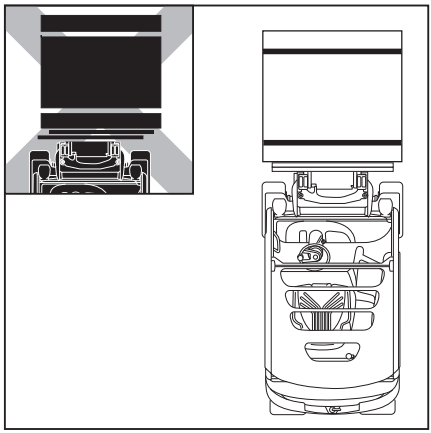

Setting down loads

⚠ DANGER

Risk of accident due to changed moment of tilt!

Please note that the lift mast can be tilted far enough forward with a raised load to cause the truck to tip over.

The load centre of gravity and the moment of tilt both change when the load slips. The truck may tip forwards.

– Only tilt the lift mast forwards with a raised lifting accessory when it is directly above the stack.

– When the lift mast is tilted forwards, take particular care to ensure that the truck does not tip forwards and that the load does not slip.

⚠ WARNING

Risk of accident from falling load!

If the fork or the load remains suspended during lowering, the load may fall.

– When removing from stock, move the truck far enough back so that the load and the fork can be lowered freely.

– Drive up to the stack with the load lowered in accordance with regulations.
– Set the lift mast to vertical.
– Lift the load to the stacking height.
– Approach the rack at a moderate speed.

NOTE

The tilt speed of the lift mast in this truck is significantly higher than for previous products in this series. This is signalled by a warning message shown on the display and operating unit after the key switch has been switched on.

– Lower the load until it rests securely on the rack.
– Look behind you!
– Move the truck back until the fork arms can be lowered without touching the stack.
– Lower the fork to the ground clearance position.
– Tilt the lift mast backwards and drive away.

Driving on ascending and descending gradients

DANGER

Risk of fatal injury!

Driving on ascending and descending gradients carries special dangers!

– Always follow the instructions below.

– On ascending and descending gradients, the load must be carried facing uphill.
– It is only permitted to drive on ascending and descending gradients that are marked as traffic routes and that can be used safely.
– Ensure that the ground to be traversed is clean and provides a good grip.
– Do not turn on ascending and descending gradients.
– Do not drive onto or along ascending and descending gradients at an angle.
– Do not park the truck on ascending or descending gradients.
– In case of emergency, secure the truck with wedges so that the truck does not roll away.
– Reduce the driving speed on descending gradients.
– Do not drive downhill faster than the truck can drive uphill on the same gradient.
– Determine the maximum permissible speed with a test drive uphill, if necessary.

It is not permitted to drive on long ascending and descending gradients greater than 15% due to the specified minimum braking and stability values.

– Before driving on ascending and descending gradients greater than 15%, consult the authorised service centre.

The process of placing loads into stock and removing loads from stock while on an ascending or descending gradient is not permitted!

– Always place loads into stock and remove loads from stock on a horizontal plane.

Driving on loading bridges

⚠ DANGER

Risk of accident if the truck crashes!

Steering movements can cause the tail end to veer off the loading bridge towards the edge. This may cause the truck to crash.

The lorry driver and the truck driver must agree on the lorry's departure time.

– Before driving across a loading bridge, ensure that it is properly attached and secured and has a sufficient load capacity (lorry, bridge etc.).
– Drive slowly and with care on the loading bridge.
– Ensure that the vehicle onto which you will be driving is secured to prevent it from shifting and that it can support the load of the truck.

Determining the actual total weight

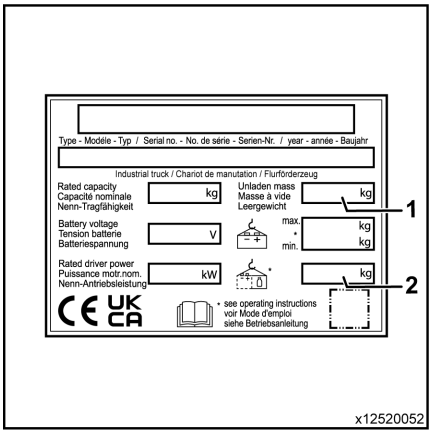

– Park the truck securely.
– Determine the unit weights by reading the truck nameplate and, if necessary, the attachment (variant) nameplate and, if necessary, by weighing the load to be lifted.
– Add the determined unit weights to obtain the actual total weight of the truck:

Tare weight (1)
\+ Ballast weight (variant) (2)
\+ Attachment net weight (variant)
\+ Weight of the load to be lifted
\+ 100 kg allowance for driver
= Actual total weight

Driving on lifts

The driver may only use this truck on lifts with a sufficient rated capacity and for which the operating company has been granted authorisation.

⚠ DANGER

There is a risk to life if you are crushed or run over by the truck.

- There must be no personnel already in the lift when the truck is driven into the lift.
- Personnel are only permitted to enter the lift once the truck is secure, and must exit the lift before the truck is driven out.

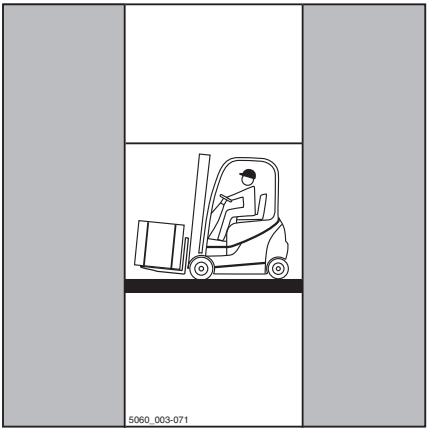

Determining the actual total weight

- Park the truck securely.
- Determine the unit weights by reading the truck nameplate and, if necessary, the attachment (variant) nameplate and, if necessary, by weighing the load to be lifted.
- Add the determined unit weights to obtain the actual total weight of the truck:

  Tare weight (1)

  \+ Ballast weight (variant) (2)

  \+ Attachment net weight (variant)

  \+ Weight of the load to be lifted

  \+ 100 kg allowance for driver

  = Actual total weight

- Drive the truck with the forks forwards into the lift without touching the shaft walls.
- Park the truck securely in the lift to prevent uncontrolled movements of the load or the truck.

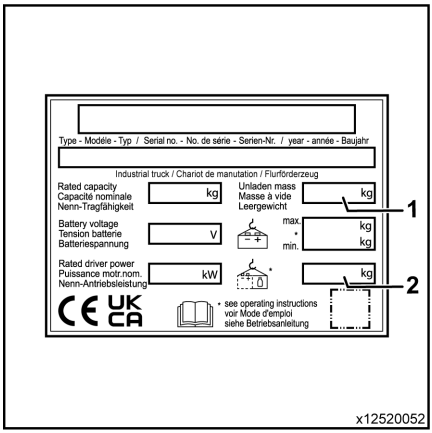

Tow coupling

If the truck breaks down, it can be towed using the tow coupling.

The tow coupling can only be used for hauling light loads in factory areas. (Pay attention to accident prevention and comply with technical safety regulations)

– Lift out the towing pin (1). ▷

– Place the towing pin into the connector tube.

– Insert the towing pin into the lock aperture.

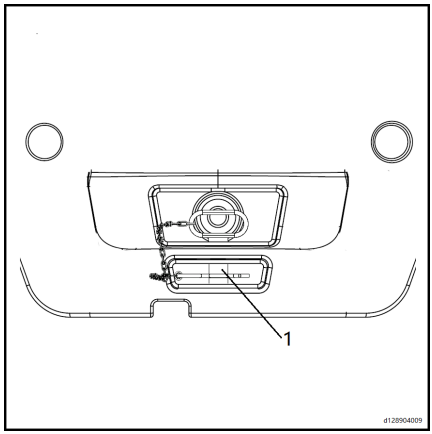

NOTE

When towing, the driver must be sitting in the seat to steer the truck, actuate the brakes and operate other controls.

NOTE

For IC counterbalanced forklift trucks, if there is no fault with the engine, we recommend starting the engine before towing the truck. This way, the hydraulic steering system can be used, which will facilitate steering.

Leaving the truck temporarily

If you want to leave the truck temporarily to perform simple tasks in the vicinity of the truck (for example, order picking, opening the door or hitching a trailer) while keeping the ignition switched on, you must observe the following precautions:

– Lower the fork carriage.

– Tilt the lift mast forwards slightly.

⚠ CAUTION

If the truck moves, there is danger of accidents.

– Never park the truck on an uphill or downhill slope with a gradient greater than 8%. If necessary, the truck should also be secured on the side facing downhill.

– The parking brake should be applied on the truck.

– Check that the truck is stationary before leaving the truck.

NOTE

*Apply the parking brake on the truck as described in the section "**Parking Brake**."*

WARNING

Make sure that the truck will not move.

NOTE

When leaving the truck temporarily, be sure to keep the truck under constant supervision.

Before exiting the truck

- Select a location that is secure and as clean as possible.
- Set down the load/lower the fork carriage completely.
- Tilt the mast forwards slightly.
- Lower the fork arms until they touch the ground.
- Apply the parking brake until it reaches the locked position.
- Switch off the truck by turning the key to the 0 position.
- Remove the key.

DANGER

Do not switch off the truck by turning the key when the truck is moving.

DANGER

The handbrake must be applied and the key removed before exiting the vehicle. Do not leave the truck on a ramp except in emergency situations. In such case, place chocks (3) under the front wheels to immobilise the vehicle.

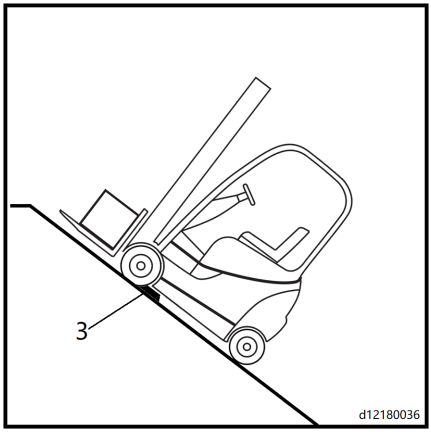

Operation in special operating situations

Transport

⚠ CAUTION

Danger of material damage from overloading!

If the truck is driven onto a means of transport, the load capacity of the means of transport, the ramps and loading bridges must be greater than the actual total weight of the truck. Components may become permanently deformed or damaged due to overloading.

– Determine the actual total weight of the truck.
– Only load the truck if the load capacity of the means of transport, the ramps and loading bridges is greater than the actual total weight of the truck.

Determining the actual total weight

▷

– Park the truck securely.
– Determine the unit weights by reading the truck nameplate and, if necessary, the attachment (variant) nameplate.
– Add the determined unit weights to obtain the actual total weight of the truck:

Tare weight (4)
\+ Max. permissible battery weight (5)
\+ Ballast weight (variant) (6)
\+ Attachment net weight (variant)
\+ 100 kg allowance for driver
= Actual total weight

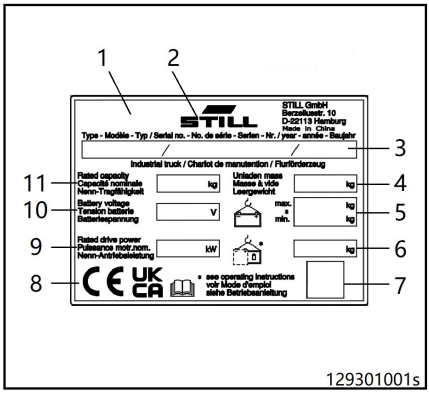

⚠ DANGER

Risk of accident from the truck crashing!

Steering movements can cause the tail end to veer off the loading bridge towards the edge. This may cause the truck to crash.

- Before driving over a loading bridge, ensure that it is installed and secured properly.
- Ensure that the transport vehicle to be driven onto has been sufficiently secured against moving.
- Maintain a safety distance from edges, loading bridges, ramps, working platforms etc.
- Drive slowly and carefully onto the transport vehicle.

Setting chocks

- Secure the truck from rolling away by placing a wheel chock in front of each front wheel and behind each back wheel (1).
- Park the truck securely.

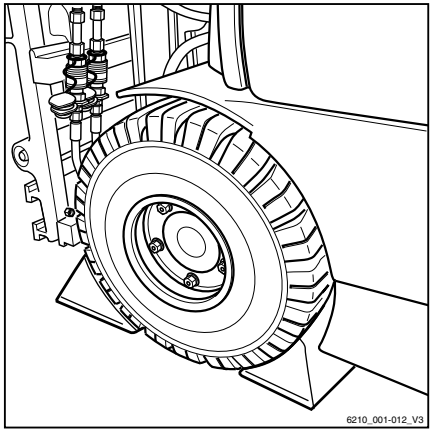

⚠ CAUTION

Risk of component damage!

If you remove the battery male connector when the key switch is switched on (under load), an arc will be produced. This can lead to erosion at the contacts, which considerably shortens their service life.

- Switch off the key switch before the battery male connector is disconnected.
- Only disconnect the battery male connector with the key switch switched on in an emergency.

- Ensure that the key switch is switched off.
- Disconnect the battery male connector.

NOTE

If the electric parking brake (variant) cannot be triggered electrically, it must be applied manually; see the chapter entitled "Emergency operation of the electric parking brake".

Use a truck or flatbed trailer to carry the forklift truck

▷

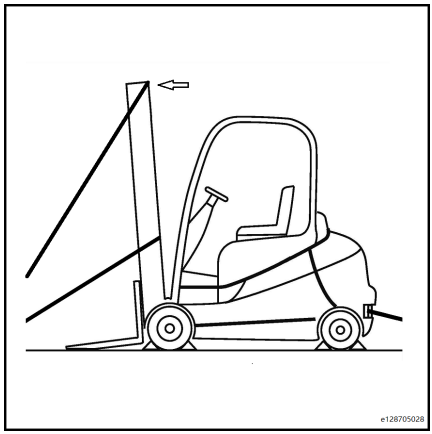

– Lower the lift mast completely.

– Tilt the lift mast forward.

NOTE

The fork arms must be resting on the ground.

– Apply the parking brake.

– Switch off the truck.

– Place wedges underneath the forklift truck.

– Fasten the forklift truck to the truck using ropes attached to the towing device and to the left and right outer profiles of the forklift truck's lift mast, or to the towing device and the lifting points shown by the arrows.

CAUTION

Damage may occur to the mast components.

Stay clear of the ropes used for fastening, and do not tighten around hose lines, lift cylinders and mast chains.

DANGER

A slipping rope may cause the forklift truck to slide!

The forklift truck must be securely tied down to prevent it from moving during transportation.

Make sure that the securing ropes are tight.

NOTE

If the mast is removed from the forklift truck, fasten the forklift truck to the truck by tying ropes to the towing device and to the left and right sides of the overhead guard.

DANGER

A slipping rope may cause the forklift truck to slide!

The forklift truck must be securely tied down to prevent it from moving during transportation.

Make sure that the securing ropes are tight.

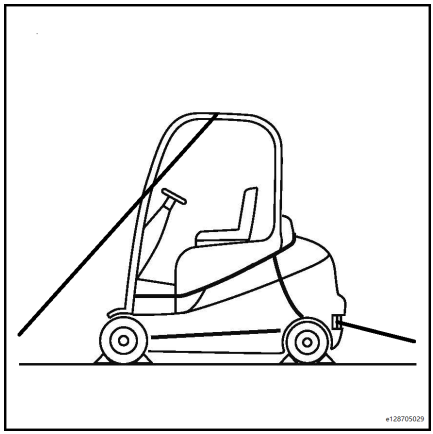

Towing

DANGER

The brake system on the towing vehicle may fail. There is a risk of accident!

If the brake system of the towing vehicle is not adequately sized, the vehicle may not brake safely or the brakes may fail. The towing vehicle must be able to absorb the pulling and braking forces from the unbraked towed load (total actual weight of the truck).

– Check the pulling and braking forces of the towing vehicle.

DANGER

The truck could drive into the towing vehicle when the towing vehicle brakes. There is a risk of accident!

If a rigid connection has not been used for power transmission in two directions during towing, the truck may drive into the towing vehicle when the towing vehicle brakes. For safety reasons, only a tested tow bar may be used.

– Use a tested tow bar.

CAUTION

If the drive of the truck between the drive motor and the drive axle is not interrupted, the drive may be damaged.

– Place the drive direction switch in the neutral position.

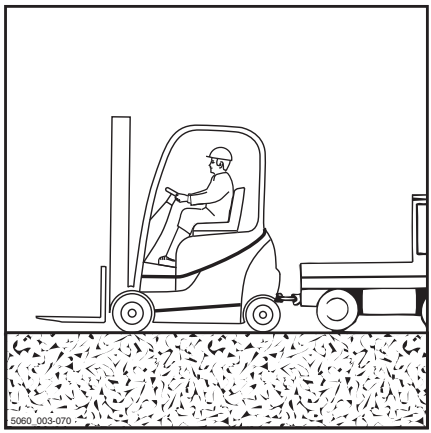

⚠ CAUTION

Risk of component damage!

If you remove the battery male connector with the key switch switched on (under load), an arc will be produced. This can lead to corrosion at the contacts, which considerably shortens their service life.

– Do not disconnect the battery male connector while the key switch is switched on.

⚠ DANGER

People can be crushed between the truck and towing vehicle during manoeuvring. There is danger of death!

The towing vehicle may only be manoeuvred and the tow bar may only be attached using a second person as a guide. This ensures that the driver of the towing vehicle and the mechanic attaching the tow bar are aware of possible risks.

– Only manoeuvre with a guide.

⚠ CAUTION

Steering is stiff! There is no power steering if the hydraulics fail!

– The selected towing speed must allow the truck and towing vehicle to be effectively braked and controlled at all times.

⚠ CAUTION

If the truck is not steered while it is being towed, it may veer out in an uncontrolled manner!

– The truck being towed must also be steered by a driver.
– The driver of the truck being towed must sit in the driver's seat and fasten the seat belt before towing.
– Where possible, activate the restraint systems provided.

– Set down load and lower fork arms close to the ground.
– Place the drive direction switch in the neutral position.
– Apply the parking brake.
– Switch off the key switch.
– Disconnect the battery male connector.
– Check the pulling and braking forces of the towing vehicle.

- With the help of a guide, attach the towing vehicle to the truck.
- Secure the tow bar to the tow coupling of the towing vehicle and the truck.
- Sit in the driver's seat in the truck to be towed, and fasten the safety belt.
- Where possible, activate the restraint systems provided.
- Release the parking brake.
- Select a towing speed that allows the truck and towing vehicle to be effectively braked and controlled at all times.
- Tow the truck.
- After towing, secure the truck from rolling away (e.g. by applying the parking brake or using chocks).
- Remove the tow bar.

Loading and unloading the truck

Use an inclined plane or a movable platform to load and unload the truck. If the truck is not operational, lift as described below.

⚠ DANGER

Use a crane with a suitable lifting capacity for the weight of the truck, indicated on its data plate. The lifting operations must be performed by qualified personnel. DO NOTstand within the crane's radius of action or under the raised truck. Use NON METALLIC slings. Make sure that the lifting capacity of the slings is suitable for the weight of the truck.

Lifting eye bolts

⚠ WARNING

Only use eye bolts that meet standard **DIN 580**.

– Eye bolt dimensions are as follows: ▷

D1	L
M30 x 3.5	45

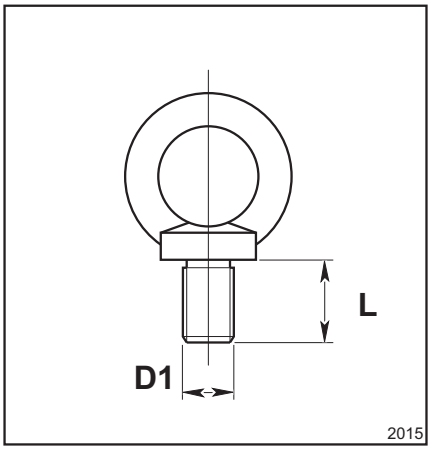

Lifting the truck with a crane

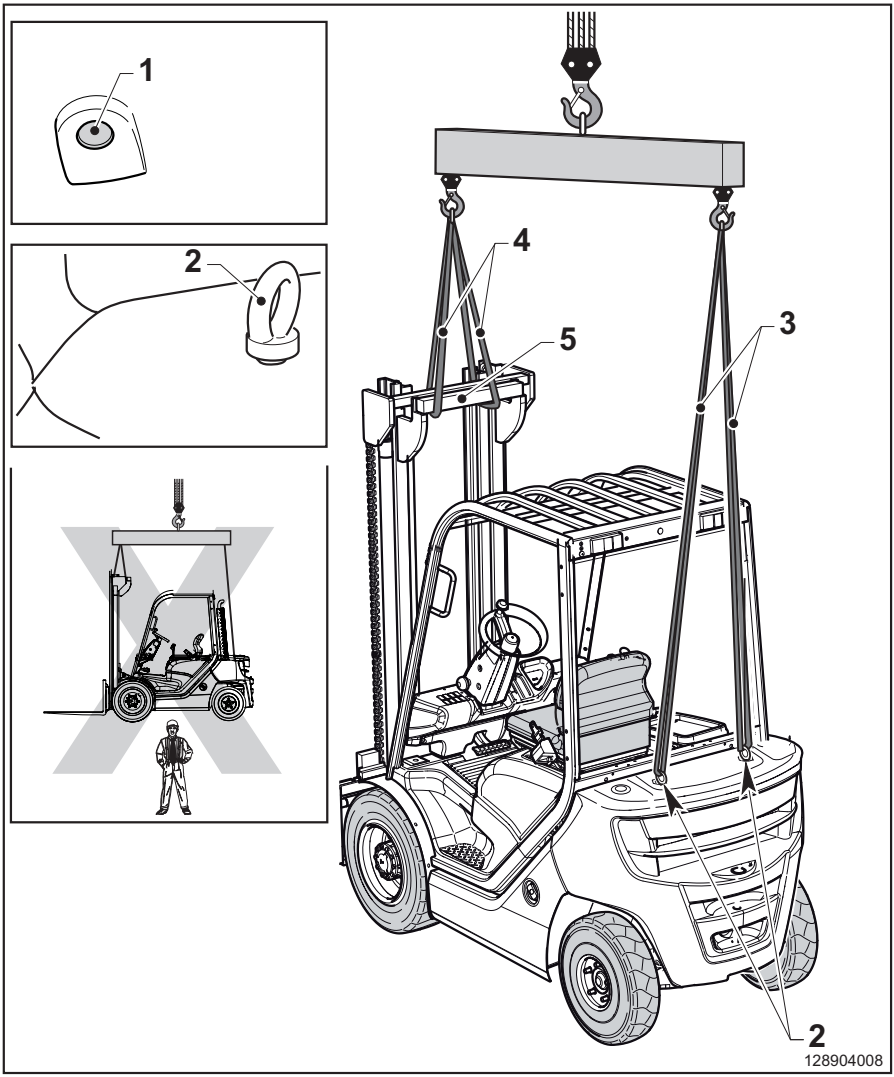

⚠ DANGER

When lifting the truck with a crane, there is a risk of accident and fatal injury if personnel are in the working area of the crane.

When using a crane to lift the truck, pay particular attention to ensure that no personnel are in the vicinity of the crane. Comply with the load capacity rating marked on the crane nameplate. Never walk under a suspended load!

⚠ CAUTION

Use a spreader and crane with sufficient load capacity to lift the truck. For the weight of the truck, see the manufacturer's nameplate.

NOTE

Before lifting the truck, fasten the slings to the given lifting points. These lifting points are specifically marked on the truck.

- Lower the lift mast completely, and tilt it fully backwards.
- Remove the two rubber grommets(1) from the openings in the counterweight.
- Insert the two lifting eyes(2) at the points indicated on the ballast weight, and tighten them.
- Hook the two lifting straps (3) into the lifting eyes on the ballast weight.
- Hook these two lifting straps (3) into the hooks on the rear of the lifting beam.
- Pass the two lifting straps (4) through the upper beam (5) of the attached lift mast frame.
- Hook these two lifting straps (4) into the hook on the front of the lifting beam.

⚠ WARNING

If the raised truck swings in an uncontrolled fashion, it may crush people. There is danger of death!

- Do not allow the truck to bump into anything whilst it is being lifted, or allow it to move in an uncontrolled way.
- Do not allow the truck to bump into anything whilst it is being lifted, or allow it to move in an uncontrolled way.

⚠ WARNING

Risk of serious injury from falling truck.

Never walk or stand underneath suspended loads.

⚠ DANGER

The overhead guard will be damaged if it is contacted by lifting equipment that is under tension from lifting. This can result in later failure of the overhead guard and the risk of severe injury or death. Ensure that no part of any lifting equipment contacts the overhead guard during lifting.

Storing the truck

Shutting down and storing the truck

⚠ CAUTION

Component damage due to incorrect storage!

If the truck is stored or shut down incorrectly for more than two months, it may suffer corrosion damage. If the truck is parked in an ambient temperature of less than –10°C for an extended period, the battery will cool down. The electrolyte may freeze and damage the battery.

– Carry out the following measures before shutdown.

⚠ CAUTION

Danger of tyre deformation by continuously loading on one side!

Have the truck raised and jacked up by the authorised service centre so that all the wheels are clear of the ground. This prevents permanent deformation of the tyres.

⚠ CAUTION

Danger of damage from corrosion due to condensation on the truck!

Many plastic films and synthetic materials are watertight. Condensation water on the truck cannot escape through these covers.

– Do not use plastic film as this encourages the formation of condensation water.

NOTE

Store only fully charged batteries.

Measures before shutdown

– Store the truck in a dry, clean, frost-free and well ventilated environment.

– Clean the truck thoroughly; see the chapter entitled "Cleaning".

– Lift fork carriage to full extent several times.

– Tilt the lift mast forwards and backwards several times and, if fitted, move attachment repeatedly.

- To relieve the strain on the load chains, lower the fork onto a suitable supporting surface, e.g. a pallet.
- Check the hydraulic oil level and top up if required.
- Apply oil or grease thinly to all uninsulated moving parts.
- Lubricate the forklift truck.
- Lubricate the joints and controls.
- Fill the fuel tank.
- Remove the battery and store in a warm and dry location.
- Regularly check the charge state of the battery and recharge if necessary.
- Apply a suitable contact spray to all exposed electrical contacts.
- Preserve the engine as specified by the manufacturer.
- Cover the truck with vapour permeable materials, such as cotton, in order to protect against dust.
- If the truck is to be shut down for even longer periods, contact your authorised service centre to find out about additional measures.

Using after storage or decommissioning

If the truck has been decommissioned for longer than six months it must be checked carefully before being used again. As with the annual safety inspection, this check must also include all safety-related aspects of the truck.

- Thoroughly clean the truck.
- Lubricate the joints and actuators.
- Check the battery condition, acid level and acid density. Charge if necessary.
- Restore the engine to normal condition as specified by the engine manufacturer.
- Check the engine oil for condensation water. Change the hydraulic oil if necessary.

– Check the hydraulic oil for condensation water. Change the hydraulic oil if necessary.
– Replace the brake oil.
– Arrange for the authorised service centre to perform the same inspections and tasks that were carried out before initial commissioning.
– Perform the activities specified under "Visual inspections and function checking".

The following points in particular must be checked:

- Drive
- Controller
- Steering
- Brakes (service brake, parking brake)
- Lifting system (lifting accessories, load chains, mounting)

NOTE

For further information, see the workshop manual for the truck or contact the authorised service centre.

Disposal of old trucks

The disposal of old trucks is regulated in directive 2000/53/EC from the European Parliament and Council.

We therefore recommend having this work carried out in an approved recycling plant. If you would like to carry out this work yourself, you must obtain approval from the relevant authorities as per articles 9, 10 and 11 of directive 75/442/EEC.

In addition, the following minimum requirements must be observed:

- The locations in which old trucks are stored before treatment must be areas suited to this task with impervious surfaces. These areas are also to be equipped with collection devices and separators for leaking fluids and degreasing cleaning materials
- The locations for treatment must be areas suited to this task with impervious surfaces. These areas must also be equipped with collection devices and separators for leaking fluids and degreasing cleaning materials. Suitable storage areas must be available for disassembled and partially oil-smeared parts, as well as for tyres including fire protection measures. Suitable storage tanks for fluids such as fuel, AdBlue® (urea solution), engine oil, hydraulic oil, cooling fluid and fluids from air conditioning systems must also be provided
- In order to dispose of harmful substances from the old trucks, the batteries and LPG container must be removed. The following must also be removed, collected and stored separately: fuel, AdBlue® (urea solution), engine oil, cooling fluid, hydraulic oil and fluids from air conditioning systems
- The following parts are to be collected separately and recycled: catalytic converters, metal components containing copper and aluminium, tyres, large plastic components (consoles, fluid containers) and glass

NOTE

The operating company is responsible for adherence to the directives as well as additional country-specific regulations.

5

Maintenance

Safety information for inspection and maintenance work

The industrial truck will only remain ready for operation at all times if the maintenance and inspection tasks are performed at regular intervals and in accordance with the information in the operating instructions.

Maintenance work may be performed only by competent persons. You can agree to have this work performed on the basis of a maintenance contract concluded with your service partner.

Whenever performing maintenance work, the industrial truck should be parked on a level surface and secured so that it cannot roll away.

The industrial truck must be switched off completely, and the battery male connector and switch key must be removed.

When working with the fork carriage and/or lift mast raised, make sure they are secured against accidental dropping.

Whenever work is carried out around the front of the truck, the lift mast must be secured to prevent it tilting backwards.

No modifications, in particular attachments or conversions, should be made to your industrial truck without the manufacturer's approval.

All servicing work should be followed by a function check and a test run performed on the industrial truck.

⚠ WARNING

Any side doors fitted could fall shut during maintenance work and trap staff.

For this reason, both doors should be opened and secured in place during servicing.

⚠ CAUTION

The industrial truck must always be properly labelled.

Missing or damaged identification plates and/or adhesive labels must be replaced. For the warehouse and order number, please consult the spare parts catalogue.

ENVIRONMENT NOTE

Observe information about working with consumables.

Maintenance intervals

The inspection and maintenance intervals depend on the operating and application conditions of the industrial truck.

In the case of operation in extreme conditions (e.g. heat, cold or dust), the maintenance intervals must be reduced.

Contact your service partner.

General information

⚠ DANGER

Risk of fatal poisoning!

It is dangerous to leave the engine running in enclosed spaces. The engine consumes oxygen and emits carbon dioxide, carbon monoxide and other poisonous gases. There is a risk of fatal poisoning!

– Only operate the truck in areas that are well ventilated.

To prevent accidents during maintenance work and repair work, all necessary safety measures must be taken, e.g.:

– Apply the parking brake.

– Switch off the key switch and remove the key.

– Ensure that the truck cannot move unintentionally or start up inadvertently.

– If required, have the truck jacked up by the authorised service centre.

– Have the raised fork carriage or the extended lift mast secured against accidental lowering by the authorised service centre.

– Insert an appropriately sized wooden beam as an abutment between the lift mast and the cab, and secure the lift mast to prevent it tilting backwards unintentionally.

– Observe the maximum lift height of the lift mast, and compare the dimensions from the technical data with the dimensions of the hall into which the truck is to be driven. These steps are taken to prevent a collision with the ceiling of the hall and to avoid any damage caused as a result.

Common rail engine safety warnings

⚠ DANGER

FUEL SYSTEM UNDER HIGH PRESSURE – DANGER TO LIFE

Do not work on the fuel system when the engine is running.

The pressure in the fuel system may still be as high as several hundred bar, even after the engine has been switched off. Therefore, the common rail system can only be removed when the fuel pressure is fully released.

It is prohibited to loosen the injection line or the high pressure line when the engine is running.

⚠ DANGER

HIGH-PRESSURE FUEL SYSTEM LEAKS – DANGER TO LIFE

In the event of leakage, switch off the truck immediately and contact a service partner.

Maintenance work on the engine must be carried out by authorised professional technicians.

Engine emission requirements (*China IV)

List of emission parts and components under warranty (China IV)

Emission-related parts and components

No.	Part/component
1	Injection pump
2	Injector
3	Common rail pipe
4	ECU

NOTE

The warranty period for the above emission-related parts and components is 3000 hours or 5 years, whichever comes first. Please contact an authorised service dealer. Customers will be deemed to have voluntarily waived the engine's "three guarantees" services if they perform any repair or replacement on their own.

CAUTION

To comply with the emission requirements in Chinese national environmental protection standard HJ 1014-2020, carry out regular maintenance on emission-related parts and components under warranty in accordance with the maintenance plan.

Use instruments to test the parts and components after every 3000 hours of use. If they still meet the emission requirements, no replacement is needed.

CAUTION

Please follow the manual for normal use and maintenance.

The user shall be responsible for any loss caused by the failure or damage of emission-related parts due to improper use or maintenance by the user, and the manufacturer is relieved of related warranty responsibilities.

In-use compliance inspection (*China IV)

Visually inspect whether the engine emits black smoke. If there is black smoke, contact an authorised service partner immediately.

CAUTION

In-use compliance inspection.

In accordance with National Environmental Protection Standard HJ 1014-2020 of the People's Republic of China, random emission compliance inspections are conducted on vehicles in use every year.

Inspection and maintenance data

No.	Components	Consumable/equipment	Filling quantity/settings
1	Battery	Distilled water acid-free grease	As required
2	Hydraulic system standard, duplex and triplex masts — all lift heights	Hydraulic oil	45L
3	Wheels	Drive wheel Steering wheel	Torque value 558 Nm Torque value 210Nm
4	Pneumatic tyre inflation pressure	Drive wheel Steering wheel	1050 kPa 1030 kPa
5	Disc wheel	Front disc wheel Rear disc wheel	7.00T-15 5.00F-10
6	Gearbox oil	Gearbox oil 85W/90-GL-5	9L
7	Drive axle	Gear oil	7.6L
8	Steering axle, drive motor splined shaft, tilt cylinder	Lubricating grease	As required
9	Lift mast and chain guide	Chain spray	As required
10	Chassis-drive axle	M22x1, 5x55-8.8-ZLS	Tightening torque 570 N.m
11	Chassis/steering axle	M16-8.8-ZNS	Tightening torque 195 N.m
12	Chassis-counterweight	M24X130-10.9	Tightening torque 850 N.m
13	Chassis-tilt cylinder	M10x25-8.8	Tightening torque 44 N.m
14	Chassis-overhead guard	M12X30-8.8	Tightening torque 195 N.m
15	Drive axle-mast	M16	Tightening torque 200 N.m
16	Tilt cylinder earring	M12X25-10.9	Tightening torque 80 N.m
17	Engine support	M10x30-10.9	Tightening torque 64 N.m
18	Engine and chassis	M12x90-10.9	Tightening torque 88 N.m
19	Front tyres	M20x1.5	Tightening torque 558 N.m
20	Rear tyres	M14x1.5	Tightening torque 210 N.m
21	Gearbox and drive axle	M12x1, 25x40-8.8-ZNS	Tightening torque 88 N.m
22	Engine and gearbox	M10x35-8.8-ZNS	Tightening torque 46 N.m

Recommended fuels and oils

ENVIRONMENT NOTE

Follow recommendations regarding the use of consumables.

No.	Oil	Model specifications	Quantity/ L	Remarks
1	Hydraulic oil	HLP68	45	
2	Gear oil	Gearbox oil ‘85W/90-GL-5	7.6	
3	Gearbox oil	Gearbox oil 8#	9	
4	Diesel fuel	DIESEL-GB252-87	As required	
5	Engine oil	SAE15W-40 CF-4	6.5	Quanchai V29-50C43
		SAE15W-40 CI-4	9.5	Weichai WP3.2
		SAE15W-40 CJ-4	8.6	HYUNDAI/Doosan D24
		API SN	8.6	HYUNDAI/Doosan P24
		SAE15W-40 CF-4	10.5	Yanmar
6	Antifreeze	G05-11	10	Weichai WP3.2
			10	Quanchai V29-50C43
			12	HYUNDAI/Doosan D24
			10	HYUNDAI/Doosan P24
			10	Yanmar
7	Brake fluid	Brake fluid 'DOT4	0.25	

NOTE

The user can also use the engine's recommended oil type:

- *Weichai WP3.2: CI-4*
- *Quanchai V29-50C43: CF-4*
- *HYUNDAI/Doosan D24: CJ-4*
- *Doosan P24: API SN/ACEA A3/B4*
- *Yanmar 4TNV94L: CF-4, CH-4*

NOTE

Using oil of a lower grade than that specified in the table may damage the truck and will void the warranty.

NOTE

Forklift trucks with Quanchai engines are only available in China.

⚠ WARNING

Our forklifts are not allowed to be filled with biodiesel.

Coolant requirements

It is also possible to fill up with the engine manufacturer's recommended coolant type.

– **Weichai engine manufacturer recommended coolant type:**

Weichai Power special coolant is available with freezing points of -25℃, -35℃ or -40℃. Please select Weichai special coolant with different freezing points according to the local ambient temperature. The selection principle is that the freezing point is about 10℃ below the local temperature. The specifications for heavy duty engine coolant are shown in the table below.

Type	Product
Engine coolant for heavy duty engines	HEC-II-25
	HEC-II-35
	HEC-II-40

– **HYUNDAI/Doosan engine manufacturer recommended coolant type:**

It is recommended to use genuine HYUNDAI/Doosan LLC coolant (200L cartridge part number: 500201-00011; 3L container part number: 500201-00012)

If genuine HYUNDAI/Doosan LLC coolant is not available, use a coolant that meets the following criteria:

- ASTM D336, D6210
- JIS K-2234
- SAE J1034

– **Yanmar engine manufacturer recommended coolant type:**

Use Long Life Coolant (LLC) or Extended Life Coolant (ELC) that meets or exceeds the following guidelines and specifications.

- ASTM D6210, D4985 (US)
- JIS K-2234 (Japan)
- SAE J814C, J1941, J1034 or J2036 (International)

Regular maintenance

The following maintenance will help in improving the truck condition and ensure its functionality.

Complete this work as regularly as possible, in accordance with the operating environment.

- Clean the truck (as required).
- **Clean and lubricate the steering axle (every two weeks as recommended, or at least every month).**
- Clean the lift mast chain and apply chain spray.
- Clean and lubricate the sideshift and attachments and check functionality and state of wear (in accordance with the procedures stipulated by the manufacturer).
- Check and fill engine coolant.
- Check and top up engine oil.
- Check and top up engine fuel.
- Check for three types of leaks: the whole unit has no water leaks, air leaks or oil leaks.
- Check the fan and visually inspect the fan blades for damage. Check that the connecting bolts are tight.
- Check the belt. The belt is tensioned using the tensioning pulley, and users can check the belt tension by pressing the belt manually.
- Check that the exhaust colour is normal and that the exhaust colour of the diesel engine is light grey during normal operation. The causes of changes in colour should be inspected and eliminated.
- Check whether the engine sound is normal.
- Check whether the engine rotation speed and vibration are normal.

Service plan (Weichai WP3.2)

First service schedule (Weichai WP3.2)

Notes on maintenance
Servicing work requires specialised knowledge and special tools. Contact an authorised service partner immediately.

Preparations
Clean the forklift (as required).

Conduct the first maintenance on the internal combustion engine after 500 operating hours.
Internal combustion engine
Check and adjust the valve clearance.
Change the engine oil, oil filter, oil/water separator filter insert, and fuel filter insert.
Generator and starter checks.
Water pump check.
Replace the air filter insert (every 1000 hours on models with prefilters).
Inspect the engine for black smoke. If there is black smoke, use an instrument to detect emissions.
Drive mechanism and transmission system
Replace the hydraulic transmission fine oil filter.
Replace the hydraulic transmission oil.
Replace the hydraulic transmission gear coarse filter.

Subsequent tasks
Check and adjust the date and time on the display unit.
Carry out a functional test and test drive.
Apply maintenance label.

500 hour service plan (or at least once every 6 months)

At operating hours										Carried out	
500		1000		1500		2000		2500			
3000		3500		4000		4500		5000			
5500		6000		6500		7000		7500			
8000		8500		9000						✓	✗
Internal combustion engine.											
Generator and starter checks.											
Water pump check.											
Check and adjust the valve clearance.											
Change the engine oil, oil filter, oil/water separator filter insert, and fuel filter insert.											
Replace the air filter insert (every 1000 hours on models with prefilters).											
Special equipment											
Clean and lubricate the sideshift and attachments and check functionality and state of wear (in accordance with the procedures stipulated by the manufacturer).											
Check the preload of the double hoses for the attachments and adjust if necessary.											
Check the condition of the antistatic belt and earth (only when using tyres that are not antistatic).											
Subsequent tasks											
Check and adjust the date and time of the display unit.											
Carry out a functional test and test drive.											
Attach a maintenance sticker.											

1000 hour service plan (or at least once every 1 year)

At operating hours										Carried out	
1000		2000		3000		4000		5000			
6000		7000		8000		9000		10000			
11000		12000								✓	✗
Internal combustion engine											
Clean the radiator.											
Check the damper pad.											
Drive mechanism and transmission system											
Check hydraulic transmission and drive axle for leaks.											
Replace the drive axle gear oil (replace after 1000 hours, then after every 3000 hours).											
Check the installation of the transmission gear and tighten if necessary.											
Check wheel installation and tighten, if necessary.											
Check tyres for wear and foreign objects. (Visual inspection)											
Clean and lubricate the steering axle.											
Replace the hydraulic transmission fine oil filter.											
Replace the hydraulic transmission oil.											
Replace the hydraulic transmission gear coarse filter.											
Visually inspect the brake fluid level in the brake fluid reservoir. (It is recommended to replace the brake fluid in the reservoir every 2 years)											
Chassis and bodywork											
Check the mounting and tightness of the chassis, counterweight, overhead guard, drive axle, steering axle, tilt cylinder and tilt cylinder support.											
Check the overhead guard structure for damage, deformation, cracks, desolder-ing\paint loss, rust etc.											
Check the tightness of the bolts connecting the lift mast onto the drive axle, and tighten if necessary.											
Driver's compartment											
Check that the brake system (service brake, parking brake) is working properly and adjust if necessary.											
Check that the horn is working properly											
Check the pedal group for ease of movement, and lubricate.											
Check seat belt condition and correct operation.											
Check the joystick bellows and replace if damaged.											
Electrical system											

At operating hours										Carried out	
1000		2000		3000		4000		5000			
6000		7000		8000		9000		10000			
11000		12000								✓	✗
Check the forklift battery in accordance with manufacturer guidelines.											
Check that the seat switch and seat belt monitoring function are working normally.											
Check the condition and secure positioning of electric cables, plug connectors and cable connections.											
Hydraulic system											
Check the tilt cylinder bearing for wear, and replace as required.											
Lubricate tilt cylinder bearings.											
Check that the tilt cylinder is firmly connected and tighten if necessary.											
Check the hydraulic oil level.											
Lifting system											
Check the working condition and installation of the lift mast, lifting chains and lifting cylinders, adjust the length of the lift mast chains if necessary, and clean and apply chain spray.											
Clean and lubricate the lift mast.											
Check the fork arms and the fork arm quick-release apparatus.											
Check the fork carriage stops (if installed).											
Special equipment											
Clean and lubricate the sideshift and attachments and check functionality and state of wear (in accordance with the procedures stipulated by the manufacturer).											
Check the preload of the double hoses for the attachments and adjust if necessary.											
Check the condition of the antistatic belt and earth (only when using tyres that are not antistatic).											
Subsequent tasks											
Check and adjust the date and time of the display unit.											
Carry out a functional test and test drive.											
Attach a maintenance sticker.											

2000 hour service plan (or at least once every 2 year)

At operating hours										Carried out	
2000		4000		6000		8000		10000			
12000		14000								✓	✖
Internal combustion engine											
Change the coolant.											
Special equipment											
Clean and lubricate the sideshift and attachments and check functionality and state of wear (in accordance with the procedures stipulated by the manufacturer).											
Check the preload of the double hoses for the attachments and adjust if necessary.											
Check the condition of the antistatic belt and earth (only when using tyres that are not antistatic).											
Subsequent tasks											
Check and adjust the date and time of the display unit.											
Carry out a functional test and test drive.											
Attach a maintenance sticker.											

3000 hour service plan (or at least once every 3 years)

At operating hours										Carried out	
3000		6000		9000		12000		15000		✓	✗
Drive mechanism and transmission system.											
Change the drive axle gear oil.											
Hydraulic system											
Replace the breather filter.											
Replace the suction filter insert.											
Change the return oil filter.											
Change the hydraulic oil.											
Special equipment											
Clean and lubricate the sideshift and attachments and check functionality and state of wear (in accordance with the procedures stipulated by the manufacturer).											
Check the preload of the double hoses for the attachments and adjust if necessary.											
Check the condition of the antistatic belt and earth (only when using tyres that are not antistatic).											
Subsequent tasks											
Check and adjust the date and time of the display unit.											
Carry out a functional test and test drive.											
Attach a maintenance sticker.											

Service plan (HYUNDAI/Doosan)

First service plan (HYUNDAI/Doosan)

Notes on maintenance
Servicing work requires specialised knowledge and special tools. Contact an authorised service partner immediately.

Preparations
Clean the forklift (as required).

Conduct the first maintenance on the internal combustion engine after 500 operating hours.
Internal combustion engine
Change the engine oil and filter.
Replace the oil/water separator filter insert and the fuel filter insert.
Replace the air filter insert (every 1000 hours on models with prefilters).
Drive mechanism and transmission system
Replace the hydraulic transmission fine oil filter.
Replace the hydraulic transmission oil.
Replace the hydraulic transmission gear coarse filter.

Subsequent tasks
Check and adjust the date and time on the display unit.
Carry out a functional test and test drive.
Apply maintenance label.

500 hour service plan (or at least once every 6 months)

At operating hours										Carried out	
500		1000		1500		2000		2500			
3000		3500		4000		4500		5000			
5500		6000		6500		7000		7500			
8000		8500		9000						✓	✗
Internal combustion engine											
Water pump check.											
Change the engine oil and filter.											
Replace the oil/water separator filter insert and the fuel filter insert.											
Special equipment											
Clean and lubricate the sideshift and attachments and check functionality and state of wear (in accordance with the procedures stipulated by the manufacturer).											
Check the preload of the double hoses for the attachments and adjust if necessary.											
Check the condition of the antistatic belt and earth (only when using tyres that are not antistatic).											
Subsequent tasks											
Check and adjust the date and time of the display unit.											
Carry out a functional test and test drive.											
Attach a maintenance sticker.											

1000 hour service plan (or at least once every 1 year)

At operating hours										Carried out	
1000		2000		3000		4000		5000			
6000		7000		8000		9000		10000			
11000		12000								✓	✗
Internal combustion engine											
Check the cooling fan belt tension, replace belt if necessary.											
Clean the radiator.											
Check the damper pad.											
Drive mechanism and transmission system											
Replace the hydraulic transmission fine oil filter.											
Replace the hydraulic transmission oil.											
Replace the hydraulic transmission gear coarse filter.											
Replace the drive axle gear oil (replace after 1000 hours, then after every 3000 hours)											
Check the installation of the transmission gear and tighten if necessary.											
Check the installation of the drive axle and tighten if necessary.											
Check wheel parts and tighten, if necessary.											
Check tyres for wear and foreign objects. (Visual inspection)											
Clean and lubricate the steering axle.											
Visually inspect the brake fluid level in the brake fluid reservoir. (It is recommended to replace the brake fluid in the brake fluid reservoir every 2 years)											
Chassis and bodywork											
Check the installation and mounting of the chassis, counterweight, overhead guard, drive axle, steering axle, tilt cylinder and tilt cylinder support.											
Check the overhead guard frame for structural damage, deformation, cracks, welding, peeling paint, rust and other conditions.											
Check the tightness of the bolts connecting the lift mast onto the drive axle, and tighten if necessary.											
Driver's cab											
Check that the brake system (foot brake, parking brake, electric regenerative brake) is working properly and adjust if necessary.											
Check the horn is working normally.											
Check that the pedal group can move easily and lubricate.											
Check seat belt condition and correct operation.											
Check the joystick bellows and replace if damaged.											

At operating hours										Carried out	
1000		2000		3000		4000		5000			
6000		7000		8000		9000		10000			
11000		12000								✓	✗
Electrical system											
Check the forklift battery in accordance with manufacturer guidelines.											
Check that the seat switch and seat belt monitoring function are working normally.											
Check the condition and secure positioning of the electric cables, plug connectors and cable connections.											
Hydraulic system											
Check the tilt cylinder bearing for wear, and replace as required.											
Lubricate tilt cylinder bearings.											
Check that the tilt cylinder is firmly connected and tighten if necessary.											
Check the hydraulic oil level.											
Lifting system											
Check the working condition and installation of the lift mast, lifting chains and lifting cylinders, adjust the length of the lift mast chains if necessary, and clean and apply chain spray.											
Clean and lubricate the lift mast.											
Check the fork arms and the fork arm quick-release apparatus.											
Adjust length of the lift chain, clean and apply chain spray.											
Check the fork carriage stops (if installed).											
Special equipment											
Clean and lubricate the sideshift and attachments and check functionality and state of wear (in accordance with the procedures stipulated by the manufacturer).											
Check the preload of the double hoses for the attachments and adjust if necessary.											
Check the condition of the antistatic belt and earth (only when using tyres that are not antistatic).											
Subsequent tasks											
Check and adjust the date and time of the display unit.											
Carry out a functional test and test drive.											
Attach a maintenance sticker.											

3000 hour service plan (or at least once every 3 years)

At operating hours										Carried out	
3000		6000		9000		12000		15000		✓	✖
Internal combustion engine.											
Replace the cooling fan belt.											
Drive mechanism and transmission system.											
Change the drive axle gear oil.											
Hydraulic system											
Replace the breather filter.											
Replace the suction filter insert.											
Change the return oil filter.											
Change the hydraulic oil.											
Special equipment											
Clean and lubricate the sideshift and attachments and check functionality and state of wear (in accordance with the procedures stipulated by the manufacturer).											
Check the preload of the double hoses for the attachments and adjust if necessary.											
Check the condition of the antistatic belt and earth (only when using tyres that are not antistatic).											
Subsequent tasks											
Check and adjust the date and time of the display unit.											
Carry out a functional test and test drive.											
Attach a maintenance sticker.											

5000 hour service plan

At operating hours										Carried out	
5000		10000		15000						✓	✗
Internal combustion engine											
Replace the coolant.											
Removing DPF Ash and Cleaning the DPF.											
Special equipment											
Clean and lubricate the sideshift and attachments and check functionality and state of wear (in accordance with the procedures stipulated by the manufacturer).											
Check the preload of the double hoses for the attachments and adjust if necessary.											
Check the condition of the antistatic belt and earth (only when using tyres that are not antistatic).											
Subsequent tasks											
Check and adjust the date and time of the display unit.											
Carry out a functional test and test drive.											
Attach a maintenance sticker.											

Cleaning the truck

The frequency with which cleaning is required depends on the application of the truck. If highly abrasive materials, e.g. salt water, fertiliser, chemicals or cement are used, the truck must be thoroughly cleaned after each assignment.

Deposits and accumulations of combustible materials on or in the vicinity of hot parts must be removed immediately.

Before performing service work, clean the oil filler openings and their surroundings, as well as the lubricating nipples.

When cleaning, note the following:

- Wear protective equipment
- Never wash the truck when it is switched on
- When using high-pressure cleaners, maintain a minimum distance of 300 mm between the spray pipe and the truck
- Cleaning materials that contain strong solvents can permanently damage painted and plastic surfaces
- Hot steam or cleaning materials with a powerful degreasing effect must be used with extreme caution, because these will affect the grease filling of bearings with lifetime lubrication, causing them to leak Relubrication is not possible The bearing will be destroyed

When cleaning with compressed air, remove stubborn contamination with a cold cleaning solvent.

⚠ CAUTION

Damage to or destruction of truck components!

Water must not be used for cleaning in the area of the central electrical system or switch console. Only use a dry cloth or clean compressed air for cleaning in this area.

The following areas must also **not** be subjected to a direct water jet when cleaning (e.g. using high-pressure cleaning equipment or steam cleaners):

- Electrical and electronic components
- Front axle
- Plug connectors
- Plastic pipes for the air duct
- Hydraulic hoses and coolant hoses
- Hose clips
- Insulating material

NOTE

If cleaning using a water jet cannot be avoided, the affected areas must be covered beforehand.

Internal combustion engine - Weichai

Checking the engine oil level

– Stop the truck and ensure it is parked on a level surface.

– Open the bonnet.

– Take out the dipstick (1) and wipe with a clean cloth. ▷

– Fully reinsert the dipstick.

– Remove the dipstick. The oil level should be between the upper (2) and lower (3) markings on the dipstick.

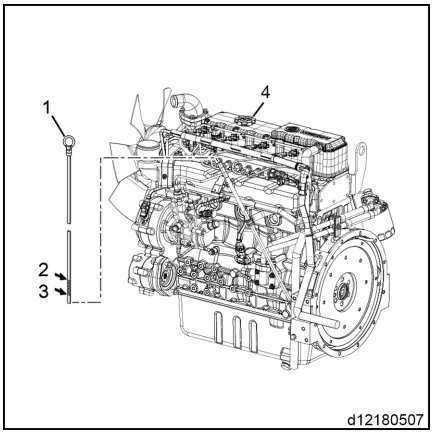

NOTE

If necessary, open the oil filler cap (4) and add oil.

– Fully reinsert the dipstick.

Changing the air filter insert and checking the vacuum switch

– Open the bonnet.

– Loosen the nuts and remove the filter cover (1). ▷

– Pull out the air filter insert (2).

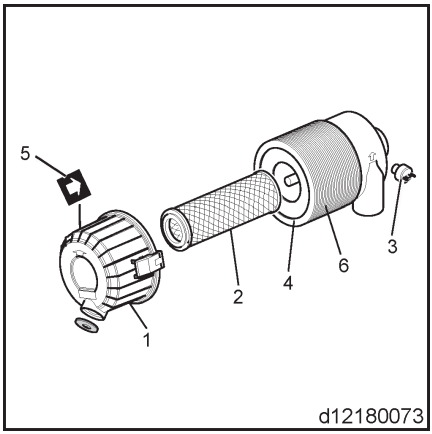

NOTE

Thoroughly clean the inside of the filter casing. Do not use compressed air to clean the filter casing.

– Ensure that the filter is not damaged during installation and that it is installed in the correct direction.

– Install the filter insert back into the air filter housing (4).

– Refit the air filter cover, ensuring that the arrow (5) on the head cover is aligned with the arrow (6) on the air filter housing.

– Disconnect the inlet hose form the air inlet.

– When the engine is running, cover the intake opening for a short time (e.g. using cardboard or a metal plate). The air filter blockage warning light on the instrument panel should illuminate. If the warning light illuminates, this indicates that the vacuum switch is working properly. To prevent damage, do not continue to block the intake opening after the warning light illuminates.

NOTE

If the air filter plug warning light does not illuminate, please contact your authorized service partners.

– Reinstall the hose.

Cleaning the air filter insert

Please note that the air filter shown in the figure is for illustration purposes only.

Clogged filter inserts may have an adverse impact on engine performance. Make sure to periodically clean the air filter insert.

– Loosen the nut and remove the air filter head cover.

– Pull out the air filter insert (1). ▷

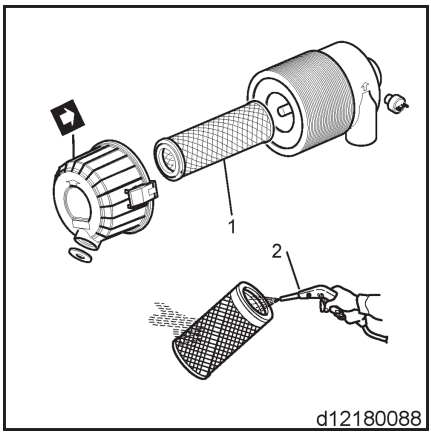

⚠ CAUTION

Flying object hazard!

Wear eye protection when carrying out maintenance on the engine and when using compressed air or pressurised water jets. This is to prevent dust, flying debris, compressed air or pressurised water or gas from damaging your eyes.

Failure to comply with the above procedure may result in injury.

– Blow out the filter insert (2) using 42-71 psi (0.29-0.49 MPa, 3.0-5.0 kgf/cm2) compressed air to remove dust. Remove dust using minimum air pressure to avoid damaging the filter insert.

– If the filter insert is damaged, heavily soiled or oily, replace it with a new insert.

– Clean the inside of the air filter head cover (1). ▷
– Fit the filter insert (2) in the air filter housing (4).
– Refit the air filter cover, ensuring that the arrow on the head cover is aligned with the arrow on the air filter housing.
– Tighten the air filter head cover onto the air filter housing.

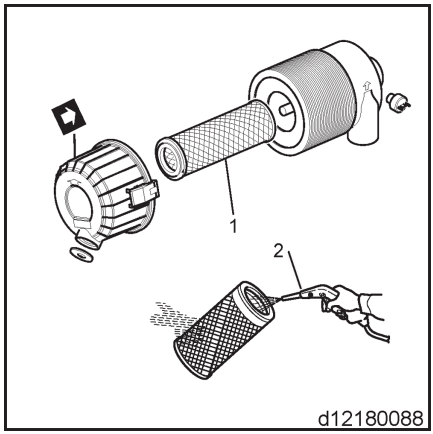

⚠ CAUTION

The air filter insert requires more frequent cleaning when the engine is running in dusty environments.

Never remove the air filter or filter cartridge while the engine is running. This may result in engine damage caused by entry of foreign objects.

Emptying the fuel filter/water trap

⚠ DANGER

Risk of fire and explosion!

Diesel fuel is highly flammable and explosive under certain conditions.

When removing and carrying out maintenance on fuel system components (such as when changing the fuel filter), place an oil pan under the engine oil port.

Avoid using workshop rags to collect fuel. Fuel is highly volatile and can easily catch fire or explode.

Wipe away droplets of fuel immediately.

Wear eye protection. The fuel system is pressurised, which means that fuel may spray out when fuel system components are removed.

Failure to comply with regulations may result in death or serious injury.

⚠ WARNING

High pressure hazard!

Avoid fuel spraying onto the skin from fuel system leakages, such as a ruptured fuel injection line. Fuel sprayed onto the skin can cause serious injury. In the event of spray injuries, seek medical attention immediately.

Do not check for fuel leaks with your hands; instead use a wooden board or cardboard. Please contact authorized service partners for maintenance and repairs.

Failure to comply with regulations may result in death or serious injury.

⚠ CAUTION

If no water flows out when the fuel filter/water trap drainage plug is open (this situation may occur if the fuel filter/water trap is installed in a position higher than the oil level in the oil tank), loosen the air vent screw on the top of the fuel filter/water trap by turning it 2-3 turns.

After emptying the fuel filter/water trap, make sure to tighten the air vent screw.

⚠ CAUTION

Be environmentally responsible. Dispose of used oil in accordance with applicable laws and regulations. Failure to comply with laws and regulations will result in serious damage to the environment.

Comply with EPA guidelines or government measures for the correct handling of hazardous materials (such as oil, diesel and engine coolant). Consult the local authorities or recycling facility.

Irresponsible handling of hazardous materials, such as dumping hazardous waste into water channels, on the ground, into groundwater or drainage ditches, is prohibited.

If the fuel filter warning light illuminates before the scheduled maintenance time, this is to alert the operator that the quantity of pollutants and water has been exceeded.

The fuel filter/water trap contains a sensor (1) that detects the quantity of water and contaminants. The sensor will transmit a signal to the alarm lamp to alert the operator.

Carry out the following procedure to empty the fuel filter/water trap:

- Place an oil pan under the fuel filter/water trap.
- Loosen the drain plug (2) at the bottom of the fuel filter/water trap. Empty the water contained inside.
- Hand-tighten the drain plug.
- When finished, make sure to fill the fuel system with diesel. See "Filling the fuel system".

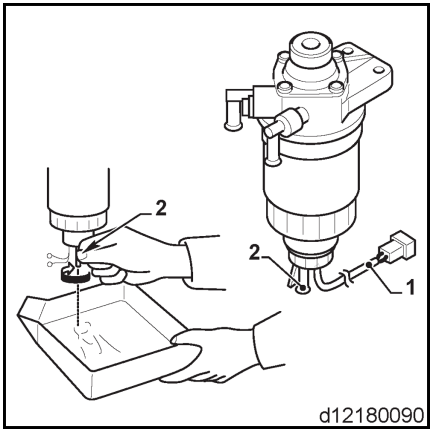

Charging the fuel system

⚠ WARNING

Risk of fire and explosion!

Diesel fuel is highly flammable and explosive under certain conditions.

When charging the fuel system, place an oil pan underneath the vent port. Avoid using workshop rags to collect fuel. Wipe away droplets of fuel immediately. After charging, be sure to close the air vent.

Wear eye protection. The fuel system is pressurised, which means that fuel may spray out when you open the vent port.

If the unit is equipped with an electronic fuel pump, turn the key switch to the ON position for 10-15 seconds or until fuel flows from the vent port with no air bubbles, which indicates that filling is complete.

If the unit is equipped with a mechanical fuel pump, operate the hand pump several times until the fuel coming out of the vent port contains no bubbles, which indicates that the system is fully charged.

Failure to comply with regulations may result in death or serious injury.

⚠ CAUTION

Be environmentally responsible. Dispose of used oil in accordance with applicable laws and regulations. Failure to comply with laws and regulations will result in serious damage to the environment.

Comply with EPA guidelines or government measures for the correct handling of hazardous materials (such as oil, diesel and engine coolant). Consult the local authorities or recycling facility.

Irresponsible handling of hazardous materials, such as dumping hazardous waste into water channels, on the ground, into groundwater or drainage ditches, is prohibited.

The fuel system requires charging under the following circumstances:

- Before starting the engine for the first time.
- After running out of fuel and adding fuel to the tank.
- After carrying out maintenance on the fuel system, such as changing the fuel filter/water trap, or replacing fuel system components.

To charge engine fuel systems with an electronic fuel pump:

– Place an oil pan underneath the vent port.

– Loosen the vent port by rotating 2-3 turns.

– Turn the key switch to the ON position for 10-15 seconds or until fuel flows from the vent port with no air bubbles.

– Tighten the vent port.

– Wipe away splashes and handle fuel properly.

– Do not charge the fuel system by using the starter motor to rotate the crankshaft. Doing so may overheat the starter motor and damage the coil, pinion and/or ring gear.

Charging engine fuel systems with a manual fuel pump:

– Place an oil pan underneath the vent port.

- Loosen the vent port (3) by rotating 2-3 turns.
- Press the hand pump (4) until the fuel coming out of the vent port contains no bubbles.
- Tighten the vent port.
- Wipe away splashes and handle fuel properly.
- Do not charge the fuel system by using the starter motor to rotate the crankshaft. Doing so may overheat the starter motor and damage the pinion and/or ring gear.

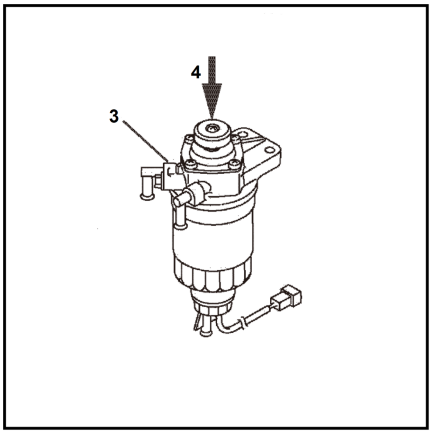

Checking and cleaning the radiator fins

⚠ CAUTION

Flying object hazard!

Wear eye protection when carrying out maintenance on the engine and when using compressed air or pressurised water jets. This is to prevent dust, flying debris, compressed air or pressurised water or gas from damaging your eyes.

Failure to follow this instruction may result in injury.

Dust and grime on the radiator fins of the cooling water tank will impair cooling function, leading to overheating. Please formulate rules for daily checking and periodic cleaning of the radiator fins.

NOTE

Please note that the air filter shown in the figure is for illustration purposes only.

– Loosen the fastening screws (1), then remove the guard grille from the radiator. ▷

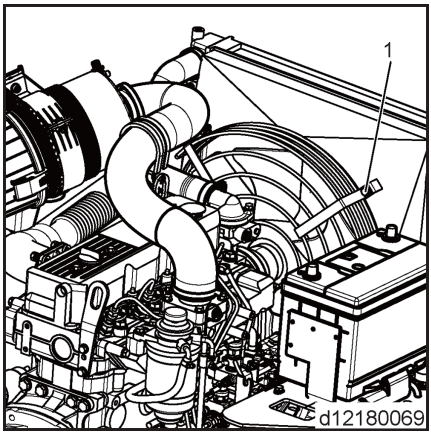

– Carefully remove the radiator (1) from between the counterweights. Use 28 psi (0.19 MPa, 2 kgf / cm2) or a small amount of compressed air (2) to remove grime and dust from the radiator fins and the radiator. Be careful to avoid the compressed air damaging the radiator fins. ▷

– If the cooling fins are very dirty, wipe with detergent, clean thoroughly and rinse with tap water.

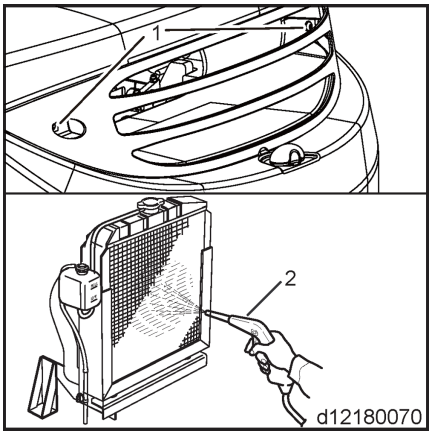

NOTE

Use of high-pressure water or compressed air greater than 28 psi or steel brushes to clean the radiator fins is prohibited. The radiator fins are easily damaged.

Checking the coolant level

Frequently check the level of the engine coolant by observing the reserve tank. If necessary, top up the coolant in the reserve tank.

NOTE

Only use coolant with the recommended specifications.

Internal combustion engine - HYUNDAI/Doosan

Checking the engine oil level

– Stop the truck and ensure it is parked on a level surface, wait for three minutes after stop.

– Open the bonnet.

– Take out the dipstick (1) and wipe with a clean cloth. ▷

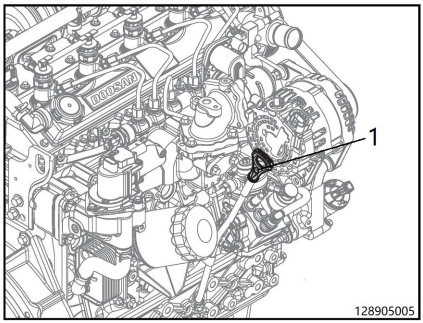

⚠ WARNING

Cleaning the indication line of the oil level gauge with dirty cloth allows the foreign substances to get into the engine, causing engine faults.

– Fully reinsert the dipstick. ▷

– Remove the dipstick. The oil level should be between the upper and lower markings on the dipstick.

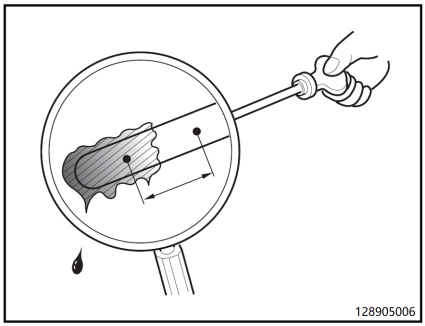

NOTE

If necessary, open the oil filler cap and add oil.

– Fully reinsert the dipstick.

Replenishment of Engine Oil

NOTE

Be careful not to let foreign substances flow into the engine when removing the oil cap.

- Remove the oil cap(2) on the top of the engine.
- Add our recommended genuine oil by dividing it into several portions for replenishment.
- Wait for about 1 ~ 2 minutes and then check the engine oil level.
- Check whether the oil is smeared between the upper limit and the lower limit of the oil level gauge.
- Repeat the above process until the engine oil level reaches the appropriate level.
- Complete engine oil replenishment and cover the oil cap.

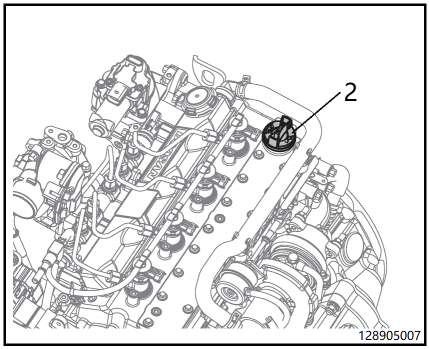

⚠ CAUTION

- Be careful not to let foreign substances flow into the engine when replenishing engine oil.
- Exceeding the upper limit of the oil level gauge may cause engine faults. If you have exceeded the upper limit of the oil gauge, drain it until the engine oil level is indicated between the upper limit and the lower limit of the oil level gauge.
- Do not use unspecified engine oil additives.

Bleeding air from the diesel filter fine filter

- Turn counterclockwise and loosen the air discharge valve(1) on top of the fuel filter.
- Pump with the pump handle(2)until fuel is discharged through the air discharge valve.

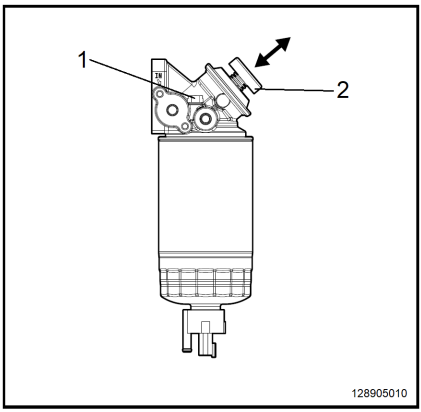

NOTE

Air in the high-pressure oil pipe line (from injection pump to injector) can be automatically bled by the starter motor. Do not unfasten the piping bolts of the oil pump, oil rail and injector.

Discharge water in the fuel filter/water trap.

⚠ DANGER

Risk of fire and explosion!

Diesel fuel is highly flammable and explosive under certain conditions.

When removing and carrying out maintenance on fuel system components (such as when changing the fuel filter), place an oil pan under the engine oil port.

Avoid using workshop rags to collect fuel. Fuel is highly volatile and can easily catch fire or explode.

Wipe away droplets of fuel immediately.

Wear eye protection. The fuel system is pressurised, which means that fuel may spray out when fuel system components are removed.

Failure to comply with regulations may result in death or serious injury.

⚠ WARNING

High pressure hazard!

Avoid allowing fuel to splash on the skin due to fuel system leaks such as a ruptured fuel injection line. Fuel splashed on the skin can cause serious injury. In the event of injury from splashed fuel, seek medical advice.

Do not check for fuel leaks with your hands; instead use a wooden board or cardboard.

Failure to comply with regulations may result in death or serious injury.

Please ask your authorised dealer to carry out this maintenance work.

⚠ CAUTION

If no water flows out when the fuel filter/water trap drainage plug is open (this situation may occur if the fuel filter/water trap is installed in a position higher than the oil level in the oil tank), loosen the air vent screw on the top of the fuel filter/water trap by turning it 2–3 turns.

After emptying the fuel filter/water trap, make sure to tighten the air vent screw.

⚠ CAUTION

Be environmentally responsible. Dispose of used oil in accordance with relevant laws and regulations. Failure to comply with laws and regulations can cause serious damage to the environment.

Follow EPA guidelines or government measures for proper handling of hazardous materials such as oil, diesel fuel and engine coolant. Consult the local authorities or recycling facility.

It is prohibited to dispose of hazardous materials in an irresponsible manner, such as by dumping hazardous waste into sewers, groundwater, drainage channels or on the ground.

Carry out the following procedure to discharge water in the fuel filter/water trap: ▷

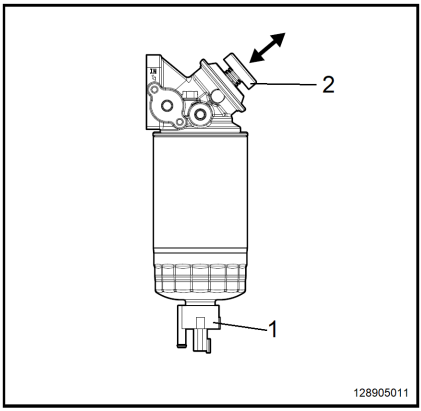

- Park the truck in a safe, flat place.
- Open the bonnet and place a container (capacity approximately 0.2 L) on (1) the end of the vinyl hose under the water trap drain plug.
- Loosen the drain plug by turning it anti-clockwise.
- Open the drain valve for approximately 10 seconds to drain the water from the fuel filter until the water trap is full of fuel.
- After draining, turn the drain plug clockwise to tighten. Then press manual pump (1) several times.
- Start the engine and make sure there is no leakage at the drain plug. Check that the water trap indicator light (if present) is off.

NOTE

- *Check the fuel filter regularly and drain the water from it. Otherwise, moisture may flow into the engine's fuel system, causing serious malfunction of the injection pump, injection pipes, common rail and injectors. In addition, the performance of the fuel filter may be degraded or damaged.*
- *Fuel may discharge when water is drained from the fuel filter. Fuel is highly flammable. If you smoke or use a fire near the engine while draining the water from the fuel filter, a fire may occur.*
- *Use only clean and approved fuel as designated. Using non-regular or non-designated fuel may result in more water in the fuel filter.*
- *If the fuel filter warning light is on, drain the water from the fuel filter. Otherwise, moisture may flow into the fuel system, causing the engine to stop.*

Checking the coolant level

Frequently check the level of the engine coolant by observing the reserve tank. If necessary, top up the coolant in the reserve tank.

NOTE

Only use coolant with the recommended specifications.

Drive mechanism and transmission system

Replacing the fine hydraulic transmission oil filter

ENVIRONMENT NOTE

Handle liquids and lubricating oil in accordance with the instructions.

NOTE

If transmission oil flows out, a collection container should be placed underneath the fine oil filter.

– Remove the floorplate.

– Unscrew the fine oil filter (1) from the hydraulic transmission.

– Install a new fine oil filter until tightly secured.

– Reinstall the floorplate.

▷

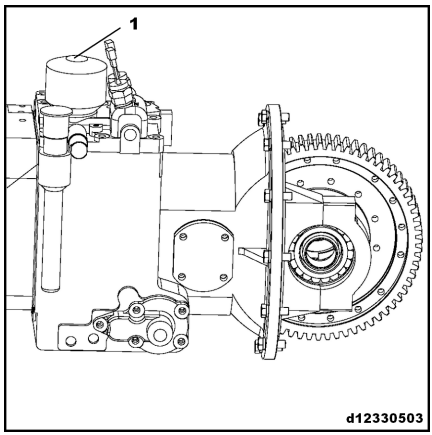

Changing the hydraulic transmission crude oil filter

ENVIRONMENT NOTE

Handle liquids and lubricating oil in accordance with the instructions.

NOTE

Place a container under the crude oil filter to collect oil flowing out of the transmission.

– Remove the floorplate.

- Unscrew the fastening screws and washers on the the crude oil filter.
- Slowly pull out the crude oil filter so that the oil flows into the container.
- Unscrew the crude oil filter from the oil filter seat.
- Unscrew the fastening nut on the crude oil filter; then remove the filter insert.
- Replace it with a new crude oil filter insert. Fit the filter insert followed by the bottom cover onto the filter spindle; then tighten the nut.
- Refit the crude oil filter to the gearbox using the fastening screws.
- Reinstall the bottom plate.

▷

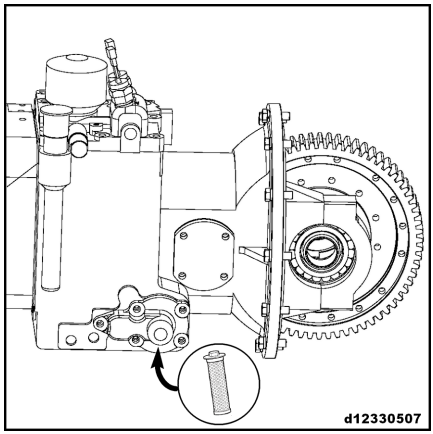

Clean the crude oil filter of the hydraulic transmission gear

NOTE

Please use recommended oils for cleaning

- *Clean the crude oil filter whenever the transmission oil is changed.*

ENVIRONMENT NOTE

Handle liquids and lubricating oil in accordance with the instructions.

- Place a container under the crude oil filter.
- Remove the floorplate.
- Unscrew the fastening screws and washers on the the crude oil filter.
- Slowly pull out the crude oil filter so that the oil flows into the container.

– Clean the filter screen with a brush.

NOTE

Replace the filter insert depending on the circumstances (e.g. filter insert damaged).

– Refit the crude oil filter to the gearbox using the fastening screws.

NOTE

If the truck is left idle for extended periods, the filter insert should be cleaned every 5 months.

Changing the oil of the hydraulic transmission gear

ENVIRONMENT NOTE

Observe precautions for handling fuel and lubricants

– Place a collection container under the right-hand side of the forklift truck.

– Remove the floorplate.

– Unscrew the oil drain plug (1). ▷

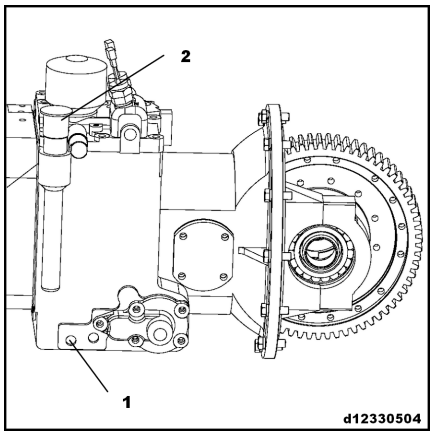

– Fully drain the oil of the gearbox transmission gear.

– Wipe clean the area around the oil drain plug.

– Reinstall the oil drain plug and washer.

ENVIRONMENT NOTE

Dispose of the waste hydraulic oil appropriately.

– Unscrew the filler cap (2).

– Add transmission oil through a filler pipe.

Fill capacity: approx. 9 L

– Use the dipstick to check the transmission oil level, which should reach the upper mark on the dipstick.

– Reinstall the floorplate.

– Start the engine and run it in neutral for a while. After the engine stops running, recheck the oil level, which should be between the upper and lower marks on the dipstick. Also check the leak resistance of the oil tank.

NOTE

The filler cap also functions as a vent cap.

Checking the transmission gear and drive axle for leaks

– Remove the rubber mat from the floorplate.

– Remove the floorplate.

– Check the appearance of the transmission gear and drive axle for evidence of leakage.

NOTE

If the transmission gear or drive axle is leaking, please contact an authorised service partner.

Checking the oil level of the hydraulic transmission

– Ensure the forklift truck is stopped on a level surface.

– Remove the bottom plate.

– Run the truck in neutral for 3-5 minutes.

– Take out the dipstick (1) and wipe with a clean cloth. ▷
– Fully reinsert the dipstick.
– Remove the dipstick. The oil level should be between the upper and lower markings on the dipstick. Add transmission oil through this port if necessary.
– Fully reinsert the dipstick.

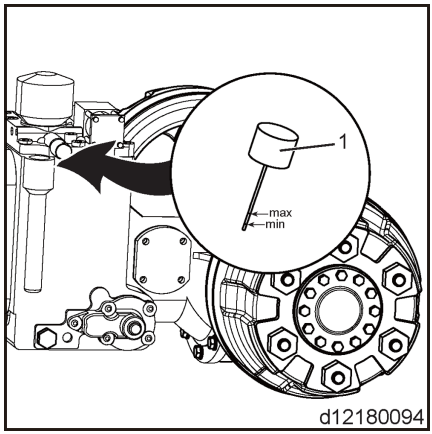

Change the drive axle gearbox oil

Emptying the gear oil

ENVIRONMENT NOTE

Observe precautions for handling fuel and lubricants.

– Unscrew the plug of the oil filler port (1) so that the gear oil is easier to discharge. ▷
– Place a container under the drive axle gearbox to collect the waste transmission oil.
– Remove the oil drain plug (3) to let the gear oil drain out. After all the gear oil has been discharged from the gearbox, refasten the oil drain plug.

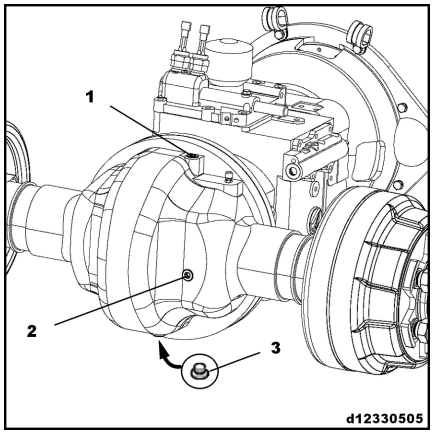

ENVIRONMENT NOTE

Appropriately dispose of used gear oil.

Filling gear oil

– Unscrew the plugs of the oil filler port (1) and oil level hole (2).
– Fill the gearbox with new gear oil, adding about 6 L, until oil flows out of the oil level hole (2).

NOTE

The high viscosity of gear oil means that it takes time for new oil to fill the gaps in the gearing. It is therefore preferable to use a pressurised filling tool; otherwise, the filling process will take longer. If you see oil flowing out of the oil filler port, this does not mean that the oil has been fully topped up. Please wait 5-8 minutes for the gear oil to fill the gaps between the gears.

– Refit the plugs of the filler port and oil level hole.

Checking the drive axle gearbox oil

– Unscrew the oil plug at the oil level aperture (1). ▷

– Check the gear shaft oil level to ensure it is near the observation aperture position.

– If necessary, fill the gearbox with gear oil until oil flows out of the oil level aperture.

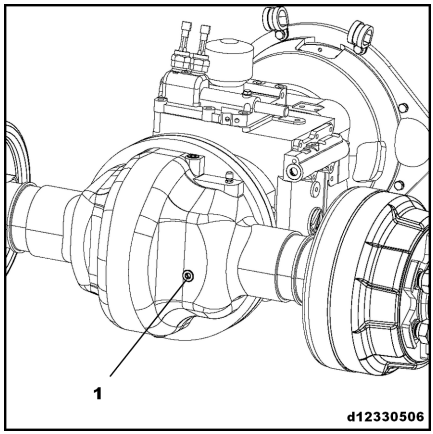

NOTE

Please refer to the chapter on replacing the drive axle gearbox oil for steps to take when adding gear oil.

Check the installation of the engine, hydraulic transmission gear and drive axle

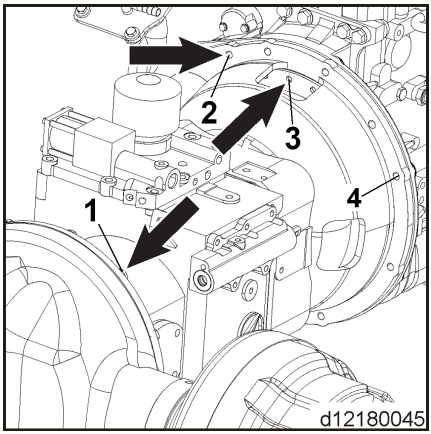

- Remove the bottom plate.
- Check installation of the connecting bolts of the engine, transmission gear and chassis (1), (2), (3), (4).
- If necessary, use a torque wrench to re-tighten the bolts.

NOTE

*Check the "**Inspection and maintenance data**" chapter for the specific torque of the connecting bolts.*

Checking the installation of the drive axle

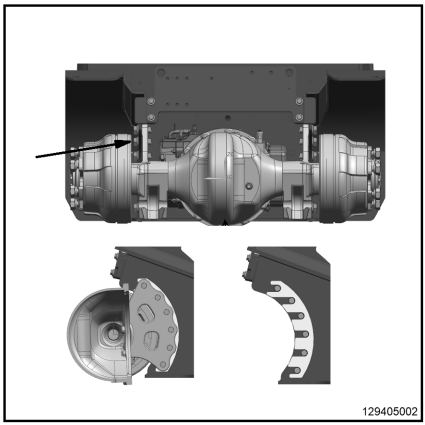

- Check the installation of the bolts connecting the drive axle and chassis.
- If necessary, use a torque wrench to re-tighten the bolts.

NOTE

*Check the **"Inspection and maintenance data"** chapter for the specific torque of the connecting bolts.*

Checking the brake fluid level in the brake fluid reservoir

- Turn off the power to the forklift truck.

– Check the brake fluid level (1) in the brake fluid reservoir. If necessary, undo the lid of the brake fluid reservoir (2) and top up with brake fluid. Otherwise, the brakes may fail. Please refer to "Recommended fuels and oils" to select the correct brake fluid.

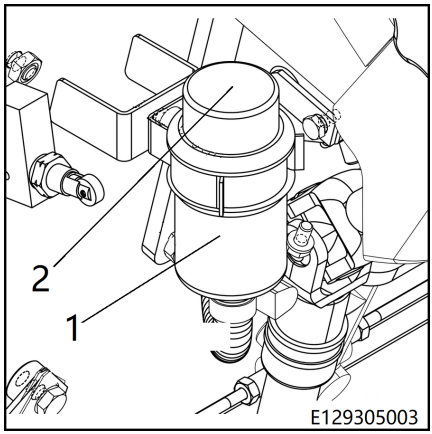

NOTE

If there is a large loss of brake fluid, contact an authorised service partner.

Checking the joystick bellows

– Check the bellows are positioned correctly and in good condition.

– Replace damaged bellows when necessary.

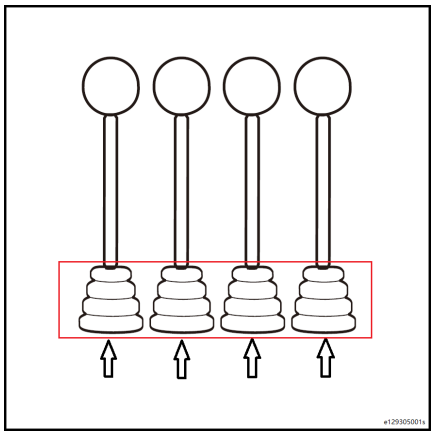

Adjust joysticks

This work should only be performed by authorised specialist staff.

Please contact an authorised service partner.

Checking the wheels

Checking for tyre damage
Checking for foreign objects in the tyre

Secure the truck to prevent movement.

– Apply the parking brake.

– Put chocks behind the wheels that do not require lifting.

– Raise the truck using a jack until the wheels are off the ground.

– Prop up using a square timber.

– Check that the wheels are able to turn freely and remove all obstructions. ▷

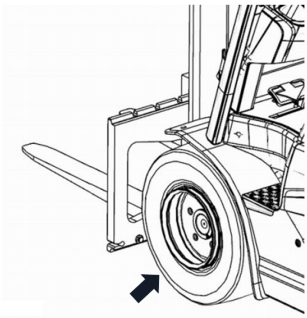

– Change abraded or damaged tyres.

A minimum tread depth is not required with solid rubber tyres.

The wear of tyres on the same wheel shaft must be the same.

Antistatic tyres

▷

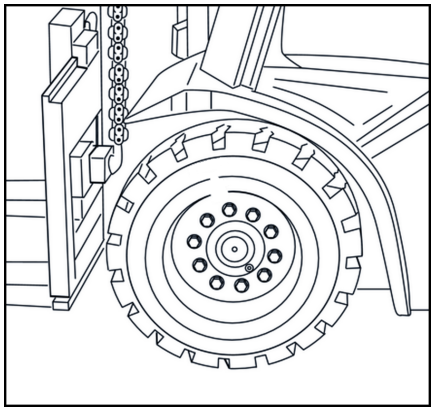

NOTE

Under certain circumstances, the truck may become electrostatically charged. The charge level depends on a number of factors, such as the type of tyre, air humidity, floor covering etc.

- *Excessive electrostatic charge is noticed when the electrostatic charge is discharged to the ground via the body of a person who touches the truck (electric shock) or when a spark passes from the truck to an earthed part (e.g. a metal shelf).*
- *With standard types of tyre (black pneumatic or solid rubber tyres), the high graphite content means that electrostatic charging is relatively rare. However, if non-mark tyres (light-coloured tyres) are used and the truck is driven into an area with a sealed floor, this electrostatic charge effect will frequently occur.*

⚠ DANGER

Risk of fire and explosion possible with electrostatic discharging.

Safety warning: Tyres are not electrically conductive.

The truck must always be earthed with an antistatic belt.

The antistatic belt must be in permanent contact with the ground.

Electrostatic charging is prevented by means of an antistatic belt, which is attached to the chassis under trucks with light-coloured tyres (non-marking tyres), while its free end trails along the ground.

Antistatic belts are made of a synthetic conductive material.

Check the tyre inflation pressure

NOTE

Low pneumatic pressure will reduce the service life of the tyres and the stability of the forklift.

– Check the specific inflation pressures of the tyres.
– When necessary, inflate and deflate using the inflation valve.

NOTE

*See the "**Inspection and maintenance data**" chapter for the specified tyre inflation pressures.*

Tightening the wheel nuts

Tighten the wheel fastenings before initial commissioning and whenever wheels are dismantled and installed or repairs are performed to the wheel fastenings.

Then re-tighten the wheel fastenings at the latest after 100 operating hours.

– Check the specific torque of the tyre hook-up and tighten them in a crosswise sequence if necessary.

NOTE

*Refer to the "**Inspection and maintenance data**" chapter for the tightening torque.*

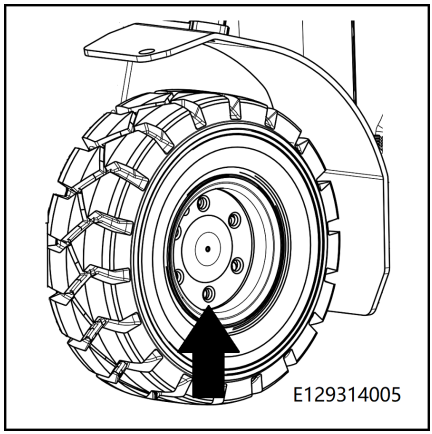

Changing wheels

DANGER

Risk of tipping.

Tyres must be the same type, from the same manufacturer and have identical dimensions and profiles.

CAUTION

Note the weight of the truck.

Only use hydraulic jacks with a load capacity at least equal to the weight of the forklift truck.

⚠ CAUTION

When using wheels that are not antistatic, pay attention to the antistatic belt.

When changing wheels that are not antistatic, the truck must be equipped with an antistatic belt as these wheels are not electro conductive.

The antistatic belt must be in permanent contact with the ground.

Contact your local authorised service partners.

Changing wheels

– Place a jack (1) to the front left-hand or right-hand side of the lift mast fixing or below the undercarriage. ▷

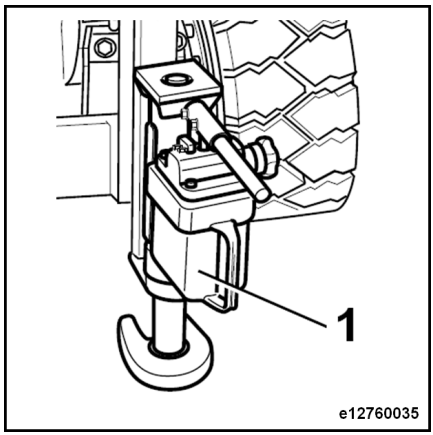

– Position a jack in the middle of the rear end of the counterweight. ▷

Only jack up the truck from these lifting points.

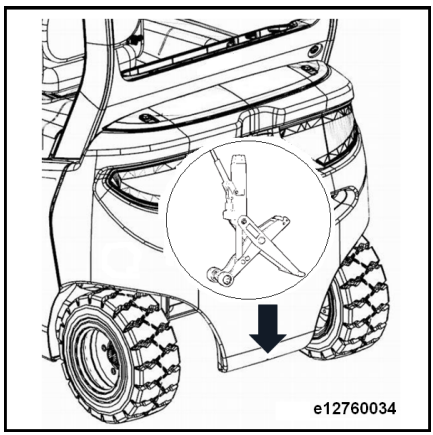

– Loosen all nuts on the wheel to be changed.

– Lift the truck with a hydraulic jack until the wheel is off the ground.

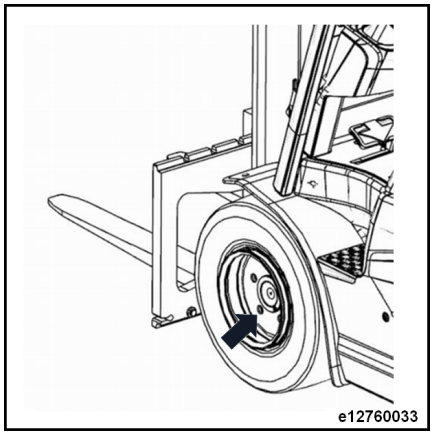

NOTE

If front wheels are to be changed, place a chock behind the rear wheels to prevent the truck sliding backwards.

– Use a hardwood strut to support the mast, undercarriage or counterweight, and then remove load from the jack.

– Unscrew the wheel nuts.

– Change the wheel.

– Fit the wheel nuts and tighten manually.

– Lift the truck, remove the supports and then lower the truck back down to the ground.

– Tighten front and rear wheel nuts.

NOTE

Refer to the "Inspection and maintenance data" chapter for the tightening torque.

Checking the condition of the antistatic belt

DANGER

Risk of fire and explosion possible in the event of electrostatic discharging.

Non-marking tyres are not electrically conductive and must always be earthed with an antistatic belt.

The antistatic belt must be in permanent contact with the ground.

Under certain circumstances, the truck may become electrostatically charged. To avoid electrostatic charging, an antistatic belt made from conductive plastic must be fitted to the base of the chassis.

Information on electrostatic charging:

- The charge level depends on a number of factors, such as the type of tyre, air humidity, floor covering etc.
- Excessive electrostatic charging is noticeable when the electrostatic charge is discharged to the ground via the body of a person who touches the truck (electric shock) or when a spark passes from the truck to an earthed part (e.g. a metal shelf)
- With standard types of tyre (black pneumatic or solid rubber tyres), the high graphite content means that electrostatic charging is relatively rare
- If non-marking tyres (light-coloured tyres) are used and the truck is driven in an area with a sealed floor, this electrostatic charging effect will frequently occur
- Non-marking tyres are identified by the safety information on the tyre wall.

- **Check that the antistatic belt is securely seated on the base of the chassis, check the condition and check for wear.**
- **If the antistatic belt is damaged, replace the antistatic belt.**

Clean and lubricate the steering axle

Cleaning the steering axle

- Lower the fork carriage fully.
- Press the emergency off switch.
- Thoroughly clean the steering axle with water or a cold-water detergent.

NOTE

After cleaning with a steam jet, lubrication is always recommended.

ENVIRONMENT NOTE

Follow recommendations regarding the use of consumables.

Lubricating the steering axle

NOTE

*Lubricate with lubricating grease. Please refer to the "**Recommended fuels and oils table**" chapter.*

- Lubricate the connecting rods and steering knuckles by adding grease via the grease nipples. ▷
- Fill grease gun with grease until fresh grease overflows.

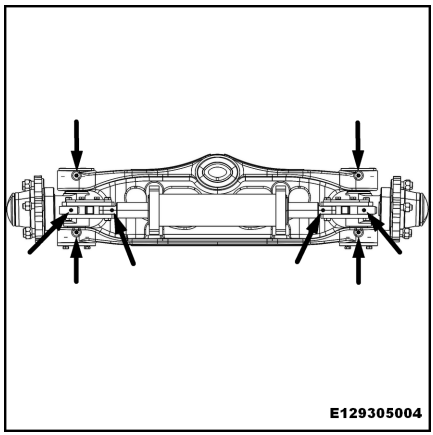

NOTE

Regularly greasing in small amounts is better than greasing in large amounts on an infrequent basis.

Chassis and bodywork

Checking the connecting bolts of the drive axle and lift mast ▷

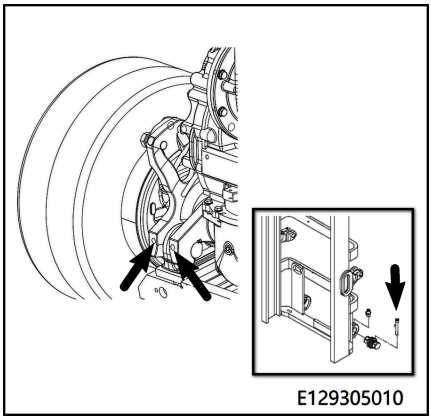

– Check the installation of the bolts connecting the drive axle to the lift mast.

– Retighten if necessary.

NOTE

*Check the **"Inspection and maintenance data"** chapter for the specific torque of the connecting bolts.*

Checking the bonnet locking devices

The truck must not be started under any circumstances until the bonnet is fully closed.

When closing the bonnet, the bonnet locking devices must audibly click into place.

⚠ CAUTION

The truck must only be driven or operated after the bonnet is closed.

– Check and ensure that the locking devices on the bonnet are working normally and close safely.

Driver's cab

Checking the pedal group for ease of movement and lubricating as required

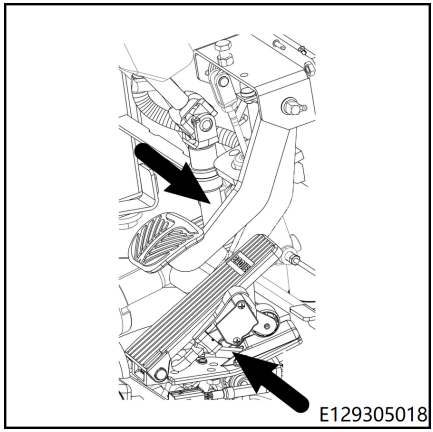

- Remove the rubber mat from the floorplate.
- Remove the floorplate.
- Check bolt and joint fastenings for secure positioning.
- Lightly oil the bearing, if necessary.
- Test functionality of the tension springs.
- Use lubricant to lubricate the contact face of the pedal.

NOTE

*Refer to the "**Recommended fuels and oils table**" for oil types.*

Checking other bearings and connections and lubricating

ENVIRONMENT NOTE

Follow recommendations regarding the use of consumables.

- Check and lubricate the following bearings and fasteners.
  - Driver's seat guide.
  - Windscreen wiper bearings (special equipment)

Other cleaning and lubricating

Performing maintenance every 1000 operating hours is generally sufficient when operating in a clean and dry internal environment. If used both indoors and outdoors, cleaning / lubricating is recommended between 500 and 1000 operating hours, or at least every 12 months.

Checking that the brake system is functioning properly

WARNING

There is a risk of accident or death if the braking system is faulty.

The forklift truck must not be driven if the brake system is defective.

If the braking system becomes faulty or worn, contact your authorised dealer.

Checking whether the service brake is working normally

– When driving, take your foot off the accelerator pedal and depress the brake pedal.

When the brake pedal is depressed, the truck must immediately slow down to a complete stop.

⚠ WARNING

To prevent use of the brake pedal being impacted:

The rubber mat on the floorplate must stay in place and have no upturned edges.

The gap between the bottom edge of the brake pedal and the rubber mat must be at least 3 mm to ensure that maximum braking force can be applied.

There must be no obstacles in the footwell.

Checking whether the parking brake is working normally

– Drive the truck on a slope with a 15% gradient while transporting a load corresponding to the rated lifting capacity.

– Apply the parking brake as described in the **"Parking brake"** chapter.

– The parking symbol Ⓟ on the display unit comes on and remains lit. The truck is braked.

The vehicle must remain stationary.

– Release the parking brake as described in the **"Parking brake"** chapter.

– The parking brake symbol Ⓟ on the display unit goes out.

Checking whether the inching control is working normally

– Check for abnormalities in the depression and return of the inching control pedal

– When the inching control pedal is fully depressed, the forklift truck should remain still and not move.

– Step on the inching control pedal, the service brake pedal should move down together.

– Check that the inching control pedal cable is connected to the transmission without any abnormality

NOTE

If necessary, the inching control pedal cable needs to be adjusted to ensure the best inching control performance. For this operation, please contact the authorized dealer.

Electrics/electronics

Checking the battery status

Maintenance-free battery:

NOTE

Before checking, actuate the parking brake and switch off the key switch.

- Open the bonnet.
- Check that the battery is properly secured to the truck, and that its outer casing is not dented or damaged.
- Check that the battery cable connection is reliable.
- Check that the vent holes are free from grime
- If the battery is equipped with a charge indicator (""magic eye""), you can check the charge state and quality of the battery by means of the magic eye on top of the battery. For an explanation of indicator states, see the markings on the battery. E.g.: green indicates good, black indicates charging required and white indicates that the battery is damaged and needs replacing.
- Refit the bonnet.

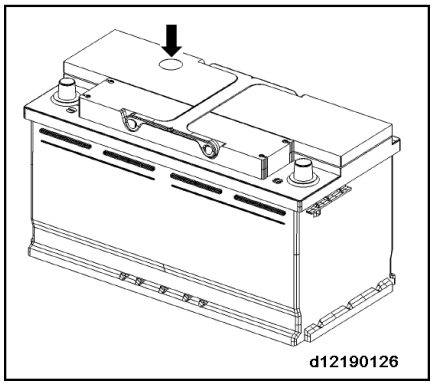

NOTE

If the truck is not used for a long time, check the battery on a monthly basis and recharge as required.

CAUTION

If the battery must be removed from the forklift, first disconnect the negative terminal.

WARNING

Batteries should be maintained and used in well-ventilated areas away from open flames.

Checking the condition and tightness of cables and connections

NOTE

Before carrying out maintenance, always actuate the parking brake and turn off the key switch.

– Open the bonnet.
– Ensure cable connectors are fastened and check for oxidation.
– Check the fastening of battery cables.
– Ensure that cables are fastened and check for abrasions.

NOTE

Oxidised connections and faulty cables will result in a voltage drop, leading to malfunctions.

– Remove oxides and replace damaged cables.
– Refit the bonnet.

Checking the fuse box

If the lights fail to light up or the electrical equipment does not work, it may be that the corresponding fuse has burnt out. Check the corresponding fuse.

Check and replace the fuse according to the following scheme:

– Set the ignition switch to the ON position.
– Remove the fuse box cover and check the fuse.
– If the fuse has burnt out, replace it with a new one.

⚠ CAUTION

Use a fuse with the same specifications as the original one.

Hydraulics

Checking the hydraulic system for leaks

⚠ CAUTION

Hydraulic hoses become brittle over time!

- Do not store hydraulic hoses for more than two years.
- Do not use hydraulic hoses for more than two years if they are subject to a high level of wear.
- Comply with the specifications of "DGUV Rule 113-020" within Germany.
- Outside of Germany, observe the national regulations for the country of use.

⚠ WARNING

Risk of injury from hydraulic oil under pressure!

Hydraulic oil under pressure can escape from leaking pipes and lines and cause injuries.

- Before checking, release the pressure from the hydraulic system.
- Wear suitable protective gloves, protection goggles etc.

NOTE

The hydraulic system must be depressurised prior to all work on the system.

- Remove the rubber mat from the floorplate.
- Remove the floorplate.

NOTE

Remove the accelerator connection plug from the floorplate.

- Check the hydraulic pump of the working and steering hydraulics, valves, hoses and lines for leaks. Tighten pipe connections as necessary.
- Replace porous hoses.
- Check hydraulic lines for damage and replace if necessary.

⚠ DANGER

Note that the hydraulic pump needs to cool down before inspection or maintenance, otherwise there is a risk of burns.

Replacing the suction filter

ENVIRONMENT NOTE

Handle liquids and lubricating oil in accordance with the instructions.

NOTE

If hydraulic oil flows out, a container should be placed under the filter to collect it.

- Open the engine cover.
- Remove the side plate assembly (3).
- Unscrew the four fastening bolts and washers on the cover assembly (2), then remove the cover assembly. ▷
- Slowly pull out the cover assembly so that the oil can flow back to the tank.
- Unscrew the oil suction filter (1) from the cover assembly.
- Screw in the new intake filter until tightened.
- Use the fastening bolts to reinstall the cover assembly onto the chassis.
- Reinstall the side plate assembly (3).
- Close the bonnet.

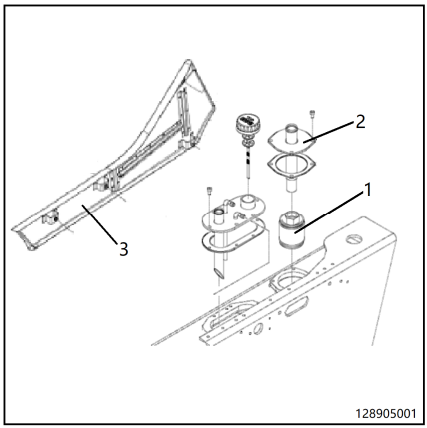

Replacing the return oil filter

ENVIRONMENT NOTE

Handle liquids and lubricating oil in accordance with the instructions.

NOTE

If hydraulic oil flows out, a container should be placed under the filter to collect it.

– Open the engine cover.

– Remove the bottom plate assembly.

– Remove the hoses on both sides of the return oil filter (1). ▷

– Unscrew the 2 bolts connecting the return oil filter (1) to the chassis, then remove the return oil filter (1).

– Replace with a new return oil filter, attaching the new return oil filter to the chassis with a bolt.

– Connect the hoses on both sides of the return oil filter.

– Reinstall the bottom plate assembly.

– Close the bonnet.

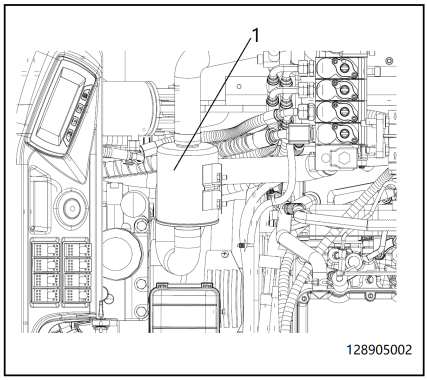

Checking the hydraulic oil level

ENVIRONMENT NOTE

Handle liquids and lubricating oil in accordance with the instructions.

NOTE

The oil level should only be checked with the lift mast vertical and the fork carriage lowered.

– Depress the parking brake.

– Open the bonnet.

- Unscrew the dipstick assembly.
- Use a clean cloth to dry the dipstick.
- Screw the dipstick assembly into the oil tank, then unscrew it again.
- The oil level should reach the dipstick scale “SD”.
- When required, fill hydraulic oil to “SD” on the dipstick.
- Reinstall the dipstick assembly.
- Safely lower the bonnet.

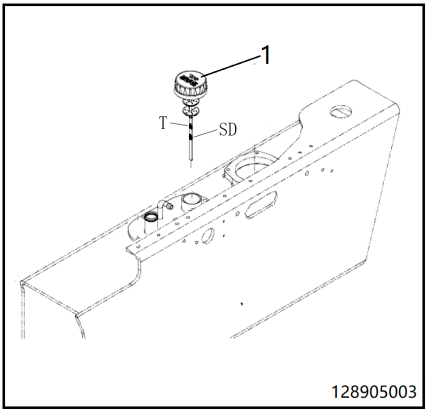

NOTE

The hydraulic oil of 1289 seriesis quantitative filling, which does not distinguish standard mast, double mast and triple mast. When filling hydraulic oil, the oil level can reach the scale line “SD”.

Changing the hydraulic oil

Draining the hydraulic oil

NOTE

The fork carriage should be lowered to its full extent.

ENVIRONMENT NOTE

Comply with operating regulations for the work environment.

- Place a collection container under the right-hand side of the forklift truck.
- Open the bonnet.
- Unscrew the breather filter and oil dipstick together.

– Remove the oil drain plug (1) and washer from the hydraulic oil tank. ▷

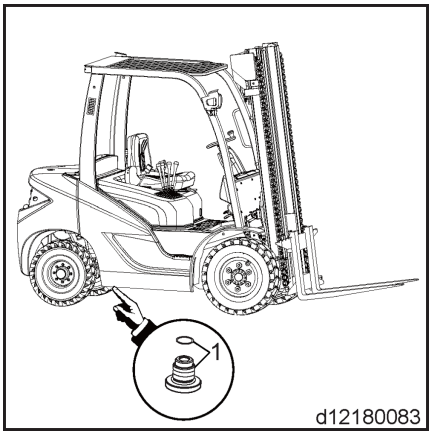

– Completely drain the hydraulic oil.
– Wipe clean the area around the oil drain plug.
– Reinstall the oil drain plug and washer.
– Twist the breather filter and oil dipstick back in again.

ENVIRONMENT NOTE

Dispose of the waste hydraulic oil appropriately.

Filling up the hydraulic oil

– Unscrew the oil filler plug assembly.
– Fill up with hydraulic oil through the oil inlet.
– Use the dipstick to check the hydraulic oil level. The oil level should reach the upper marking on the dipstick.
– Refit the bonnet.
– Start the engine and run it for a while. Check the oil level again. Check the seals.

Checking installation of the tilt cylinder ▷

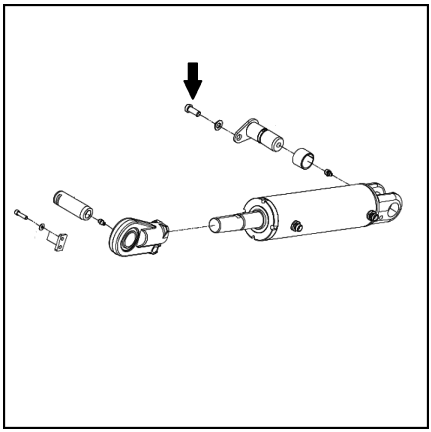

– Check installation of the tilt cylinder.
– Retighten if necessary.

NOTE

*Check the **"Inspection and maintenance data"** chapter for the specific torque of the connecting bolts.*

Lubricating tilt cylinder bearings ▷

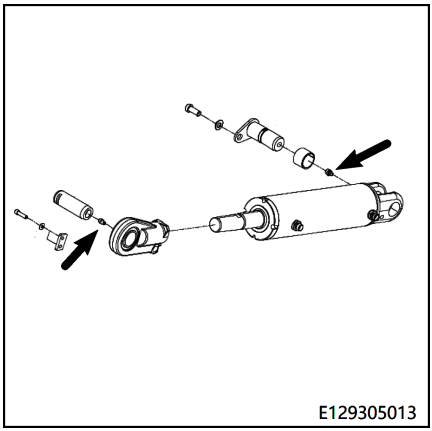

ENVIRONMENT NOTE

Observe information regarding the use of consumables.

– Check and lubricate the tilt cylinder bearings.

NOTE

Refer to the "Recommended fuels and oils" table for oil types.

Lifting system

Changing the fork arms

⚠ DANGER

There is a risk of fatal injury from being run over if the truck rolls away.

– Do not park the truck on a gradient.

– Apply the parking brake.

– Change the fork extension in a cordoned-off, safe location on a level surface.

⚠ WARNING

There is a risk of injury when changing the fork arms; the weight of the fork arms could cause them to fall on your legs, feet or knees.

The space to the left and right of the fork is a danger area.

– Wear protective gloves and safety shoes when changing the fork arms.

– Ensure that no one stands in the danger area!

– Do not pull on the fork arms.

– The fork arms must always be carried by two people; if necessary, use a hoist.

NOTE

- *It is recommended that a transport pallet is used to supporting the fork arms when they are being installed or removed. The pallet size depends on the size of fork arms in use. It should be large enough that the fork arms do not protrude after being placed on the pallet. This means the fork arms can be safely placed down and transported.*
- *Both fork arms can be pushed over onto one side.*

Removing

- Select the pallet according to the size of the fork arms.
- Position the pallet to the front of the fork carriage.
- Raise the fork carriage until the lower edges of the fork arms are approx. 3 cm higher than the height of the pallet.
- Actuate the parking brake and make sure it is applied securely.
- Turn the switch key to the left and pull it out.
- If there is mounting screw (2),undo the screw.
- Lift the pallet locking bolts (1) and turn them 90° to unlock the bolts.
- Push the fork to the middle of the fork rack and lift the end of the fork to remove the fork.

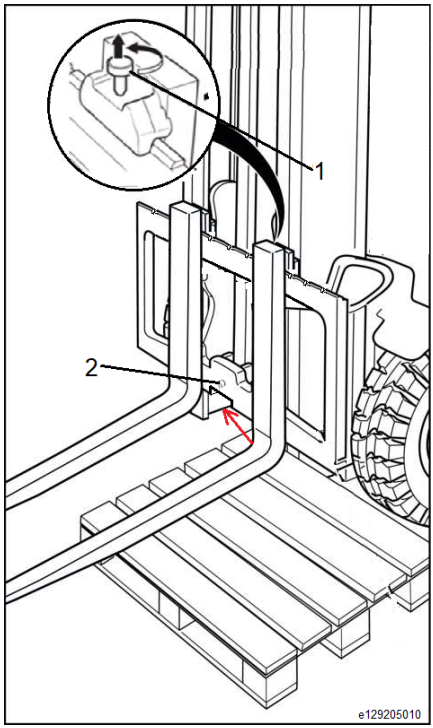

Installing

- Position the fork arms on a pallet to the middle of the fork carriage.
- Push the fork arms onto the fork carriage from the centre to the both side.
- Pull the locking bolts (1) upwards and turn them 90° to unlock the bolts, then push the fork arms into the required position. Ensure that the locking lever snaps into place.
- After adjusting, return the fork arm lock bolts to their original positions and fit into the notches on the fork carriage, so that the fork arms are unable to move.
- If there is mounting screw (2), fit and tighten the locking screw (2).

⚠ DANGER

There is a risk of fatal injury from a falling load or fork!

- If there is mounting screw (2), tighten the locking screw (2) each time a fork is changed.
- It is not permitted to drive or to transport loads without the locking screw in place.

Check the fork arms and the fork arm quick-release apparatus

– Check the fork arms for significant deformation, wear and damage.

E.g.: The thickness of the horizontal and vertical sections of the fork arms has been reduced to 90% of the designed thickness, or to the minimum thickness stipulated by the fork arm or forklift truck manufacturer, and other situations. If any fork arm defects appear as described above, use of the fork arms must be stopped.

– Check that the fork arm quick release apparatus is positioned correctly and is not damaged. ▷

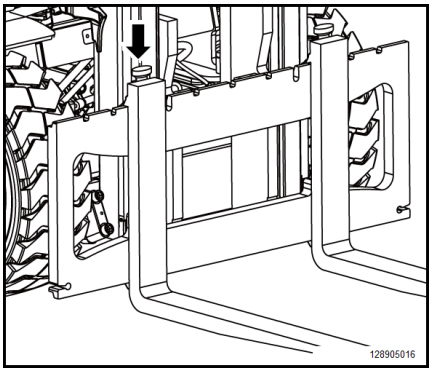

NOTE

The load backrest prevents the forks from falling off the sides of the fork carriage. If the load backrest is removed from the truck, additional devices are required to prevent the forks from falling off.

WARNING

If the fork arms/bayonet catch are not fully engaged, the fork arms may come off unexpectedly.

– Replace damaged parts.

Checking the working condition and installation of the lift mast, lifting chains and lift cylinder

- Clean the mast channel and lifting chains. ▷

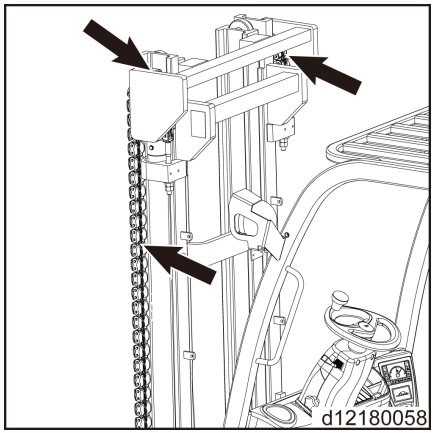

- Check the working status of the lifting chains, along with any signs of abrasion, paying particular attention to the area around the chain wheels.
- Check that the chain fixed pins are secure.
- Replace damaged lifting chains.

NOTE

Damage to or loss of the plastic protective cases on individual chains will not affect the functioning and service life of the chains.

- Check the status and tightness of the lift mast column, mast channel surfaces and roller.
- Check the tightness of the elastic lock rings at the piston rod connections on top of the lift mast.
- Check the installation of the lift cylinder.

Adjusting the length of the lifting chains and lubricating using chain spray

Adjusting the length of the lifting chains* ▷

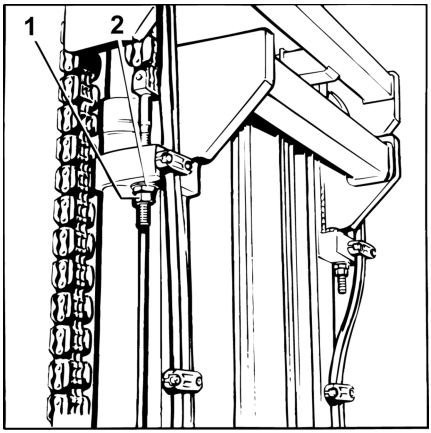

NOTE

Use over time will cause the lifting chains to stretch. Therefore, it is necessary to check and adjust the lengths of both the left and right chains.

– Fully lower the lift mast.
– Undo the lock nut (1).
– Adjust the adjustable nut (2) on the fixing bolt of the chain to modify the chain length. The guide roller under the fork carriage can extend out of the inner mast channel by a maximum of 25 mm.
– Tighten the lock nut (1).
– Adjust the second chain.

Lubricating the chains with chain spray

– Use the designated chain spray to coat the chains and guide slots.

NOTE

If the truck is used in the food industry, please use lubricating grease in place of spray.

* Only for standard masts

Adjusting the length of the lifting chains* ▷

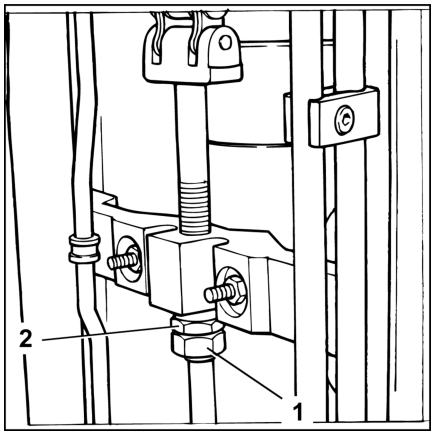

NOTE

Use over time will cause the lift chains to stretch, therefore it is necessary to check and adjust their lengths.

– Fully lower the lift mast.
– Undo the lock nut (1).
– Adjust the adjustable nut (2) on the fixing bolt of the chain to modify the chain length. The guide roller under the fork carriage can extend out of the inner mast channel by a maximum of 25 mm.
– Tighten the lock nut (1).

Lubricating the chains with chain spray

– Use the designated chain spray to coat the chains and guide slots.

NOTE

If the truck is used in the food industry, please use lubricating grease in place of spray.

* Only for completely free lifting and triple masts

Lubricating the lift mast and chains with chain spray

NOTE

If there is excessive dust on the chain, affecting the ability of the lubricating oil to permeate the chain, the lifting chain must be cleaned.

- Place an oil collecting trough under the lift mast
- Carry out cleaning with an alkyl derivative such as an industrial diesel fuel cleaning agent (please comply with the manufacturer's safety instructions).
- Additives may not be used if using a steam nozzle.
- Immediately blow the chain dry after cleaning to remove water both on the chain surface and inside the hinge pins. Move the chain several times during the blow-drying process.
- Immediately apply the designated chain spray and keep the chain moving while doing so.

▷

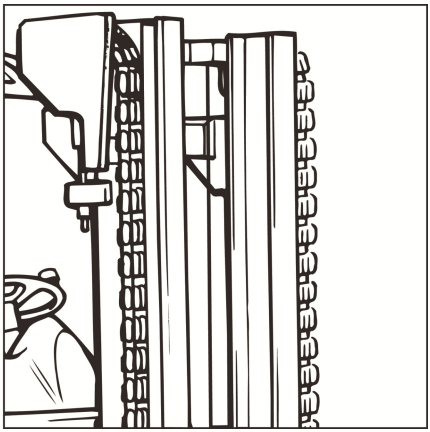

NOTE

Lifting chains are safety components. The use of cold cleaning agents, chemical cleaning agents, corrosive liquids or liquids containing acid or chlorine will cause direct damage to the chains.

Special equipment

Checking the preload of the double hoses (if equipped with attachments)

– The double hoses should be preloaded by stretching them 5-10mm per meter based on their original length.

– Move the hoses between the retaining clips so as to adjust the preload to the predetermined value.

▷

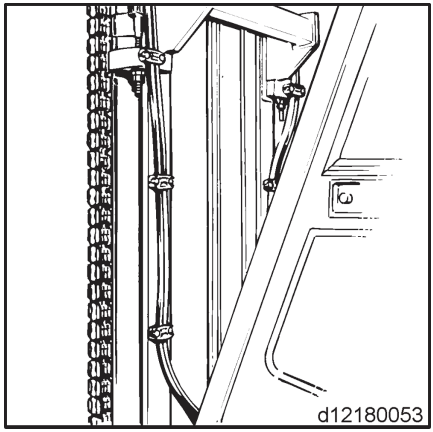

Cleaning and lubricating the sideshift forks* and checking connections

– Use a steam gun to clean the sideshift forks.

– Check hydraulic lines for damage and replace if necessary.

– Check the tightness and level of abrasion of the hydraulic lines and fasteners. Tighten or replace as necessary.

– Add lubricating grease to the oil filling ports (1), (2) and (3) on the fork carriage until fresh grease overflows from the filling port. ▷

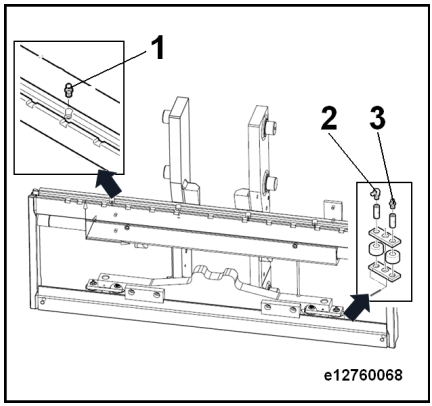

NOTE

The sideshift forks must be lubricated each time the forklift truck is cleaned.

*Optional part

6

Technical datasheet

Dimensions overview

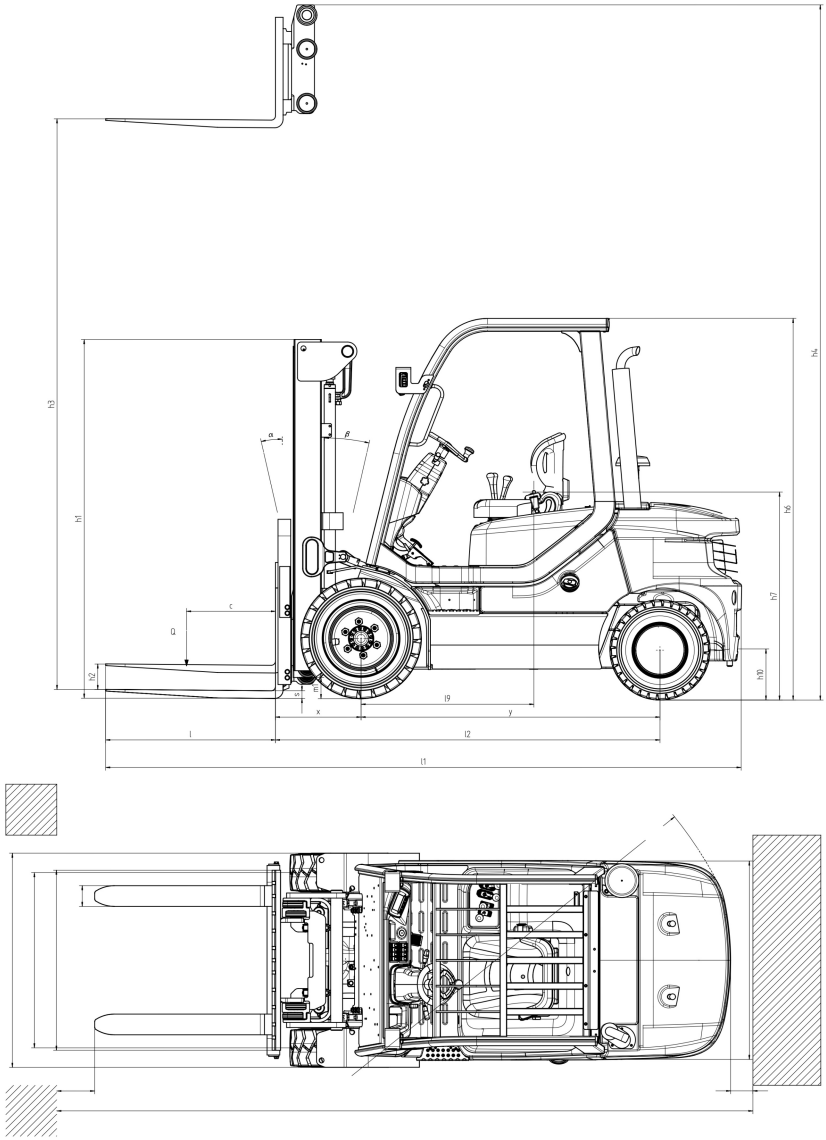

Technical datasheet (WEICHAI)

1.1	Manufacturer		KION Jin-an	KION Jin-an	KION Jin-an
1.2	Model marking		RCD 25 Plus	RCD 30 Plus	RCD 35 Plus
1.3	Drive: Electric (battery, power supply...), diesel, petrol, LPG, AC		Diesel fuel	Diesel fuel	Diesel fuel
1.4	Operating mode: manual, pedestrian, ride-on, seated, order picking		Seated	Seated	Seated
1.5	Rated load capacity	Q(t)	2.5	3.0	3.5
1.6	Load centre distance	c (mm)	500	500	500
1.8	Axle centre to fork face	x (mm)	494	504	509
1.9	Wheelbase	y (mm)	1760	1760	1760
2.1	Service weight	kg	4075	4510	4920
2.2	Axle load, full load (front/rear)	kg	5831/774	6594/916	7345/1075
2.3	Axle load, no load (front/rear)	kg	1905/2200	1883/2627	1848/3072
3.1	Tyres: solid rubber, super elastic, pneumatic, polyurethane		Pneumatic	Pneumatic	Pneumatic
3.2	Tyre specifications, front		28×9-15/18PR	28×9-15/18PR	28×9-15/18PR
3.3	Tyre specifications, rear		6.5-10/14 PR	6.5-10/14 PR	6.5-10/14PR
3.5	Number of wheels, front/rear (x = drive wheel)		2x/2	2x/2	2x/2
3.6	Track width, front	b10 (mm)	1030	1030	1030
3.7	Track width, rear	b11 (mm)	953	953	953
4.1	Lift mast/fork carriage, forwards/backwards tilt angle	α/β (°)	6/12	6/12	6/12
4.2	Height of mast, lowered	h1 (mm)	2146	2146	2146
4.3	Free lift height	h2 (mm)	150	150	150
4.4	Lift height	h3 (mm)	3000	3000	3000
4.5	Maximum height when lift mast is extended	h4 (mm)	3715	3715	3715
4.7	Overhead guard (driver's cab) height	h6 (mm)	2231	2231	2231
4.8	Driver's seat (SIP) height/Platform height	h7 (mm)	1202	1202	1202

Technical datasheet (WEICHAI)

4.81	Distance from SIP to centre of drive axle	l9 (mm)	1018	1018	1018
4.12	Tow coupling height	h10 (mm)	310	310	310
4.19	Overall length	l1 (mm)	3735	3745	3830
4.20	Length to the front face of the vertical section of the forks	l2 (mm)	2735	2745	2830
4.21	Total width	b1/b2 (mm)	1265	1265	1265
4.22	Fork dimensions, according to DIN ISO 2331	s/e/l (mm)	45/100/1000	45/122/1000	50/150/1000
4.23	Fork carriage, according to ISO 2328, class/type A, B		2 A	3 A	3 A
4.24	Width of the fork carriage	b3 (mm)	1040	1100	1100
4.31	Ground clearance at bottom end of mast, full load	m1 (mm)	146	145	144
4.32	Ground clearance, centre of wheelbase	m2 (mm)	163	161	159
4.33	Aisle width with pallet dimensions 1000 x 1200 (crossways)	Ast (mm)	4145	4145	4220
4.34	Aisle width with pallet dimensions 800 x 1200 (crossways)	Ast (mm)	4345	4345	4420
4.35	Outer turning radius	Wa (mm)	2440	2440	2510
4.36	Smallest pivot point distance	b13 (mm)	673.5	673.5	673.5
5.1	Travel speed, full/no load	km/h	17.2/17.5	17.2/17.5	17.2/17.5
5.2	Lifting speed, full/no load	m/s	0.51/0.57	0.51/0.57	0.51/0.57
5.3	Lowering speed, full/no load	m/s	0.40/0.45	0.40/0.45	0.40/0.45
5.5	Pulling force, full/no load	N	16855/10489	16500/11100	16300/10900
5.7	Climbing ability, full/no load	%	26/26	22/25	20/22
5.9	Acceleration time, full/no load	s	5.4/4.4	5.5/4.9	5.9/5.4
5.10	Service brake		Mechanical/ hydraulic	Mechanical/ hydraulic	Mechanical/ hydraulic
7.1	Name of internal combustion engine manufacturer/model		Weichai WP3.2	Weichai WP3.2	Weichai WP3.2
7.2	For internal combustion engine power, refer to ISO 1585	kW	36.8	36.8	36.8
7.3	Rated speed	min-1	2300	2300	2300
7.4	Number of cylinders/displacement	(-)/ (cm3)	4/3170	4/3170	4/3170

7.5	Fuel consumption according to DIN EN 1696	l/h	3.2	3.3	3.4
7.6	Transporting capacity, according to VDI 2198	t/h	191	238	281
7.7	Energy consumption with specified transporting capacity, according to VDI 2198	t/l	37	40	45
7.10	Battery voltage/rated capacitance	(V)/(Ah)	12 V/80 Ah	12 V/80 Ah	12 V/80 Ah
8.1	Drive control method		Hydraulic torque converter	Hydraulic torque converter	Hydraulic torque converter
10.1	Attachment working pressure	bar	165	185	205
10.2	Oil flow for attachments	l/min	30	30	30
10.4	Fuel tank volume	1	62.7	62.7	62.7
10.7	Sound pressure level (at driver's position)	dB/(A)	85	85	85

NOTE

The above datasheet is standard configuration forklift truck parameters. For non-standard configuration forklift truck, the parameters may be different.

Technical datasheet (HYUN-DAI/Doosan D24 EU5)

Technical datasheet (HYUNDAI/Doosan D24 EU5)(DM02)

1.1	Manufacturer		KION-STILL	KION-STILL	KION-STILL
1.2	Manufacturer's type designition		RCD25 Plus	RCD30 Plus	RCD35 Plus
1.3	Drive: electric (battery type, mains, ...), diesel, petrol, fuel gas		diesel	diesel	diesel
1.4	Operator type: hand, pedes-trian, standing, seated, order-picker		seated	seated	seated
1.5	Rated capacity/rated load	Q(t)	2.5	3	3.5
1.6	Load centre distance	c(mm)	500	500	500
1.8	Load distance, centre of drive axle to fork	x(mm)	494	504	509
1.9	Wheelbase	y (mm)	1760	1760	1760
2.1	Service weight	(kg)	4250	4620	5060
2.2	Axle loading, laden front/rear	(kg)	5820/840	6660/940	7420/1160
2.3	Axle loading, unladen front/rear	(kg)	1990/2260	1940/2680	1880/3180
3.1	Tyres: solid rubber, superelas-tic, pneumatic, polyurethane		Solid rubber	Solid rubber	Solid rubber
3.2	Tyre size, front		28x9-15	28x9-15	28x9-15
3.3	Tyre size, rear		6.5-10	6.5-10	6.5-10
3.5	Wheels, number front/rear (x = driven wheels)		2x/2	2x/2	2x/2
3.6	Tread, front	b10 (mm)	1030	1030	1030
3.7	Tread, rear	b10 (mm)	953	953	953
4.1	Tilt of mast/fork carriage for-ward/backward	α/β (°)	6/12°	6/12°	6/12°
4.2	Height, mast lowered	h1(mm)	2137	2137	2137
4.3	Free lift	h2(mm)	150	150	150
4.4	Lift	h3(mm)	3000	3000	3000
4.5	Height, mast extended	h4(mm)	3715	3715	3715
4.7	Height of overhead guard (cab-in)	h6(mm)	2231	2231	2231
4.8	Height of seat/stand-on plat-form	h7(mm)	1233	1233	1233
4.81	Distance front axle to SIP at middle seat position	h9(mm)	976	976	976
4.12	Coupling height	h10(mm)	310	310	310
4.19	Overall length	l1(mm)	3735	3745	3830

4.2	Length to face of forks	l2(mm)	2735	2745	2830
4.21	Overall width	b1/b2(mm)	1265	1265	1265
4.22	Fork dimensions ISO 2331	s/e/l(mm)	45/100/1000	45/122/1000	50/150/1000
4.23	Fork carriage to ISO 2328 , class/type A, B		2A	3A	3A
4.24	Fork-carriage width	b3(mm)	1040	1100	1100
4.31	Ground clearance, laden, below mast	m1(mm)	146	145	144
4.32	Ground clearance, centre of wheelbase	m2(mm)	163	161	159
4.33	Aisle width with pallet 1000 x 1200 across forks	Ast(mm)	4145	4145	4220
4.34	Aisle width with pallet 800 x 1200 along forks	Ast(mm)	4345	4345	4420
4.35	Turning radius	Wa(mm)	2440	2440	2510
4.36	Minimum pivoting point distance	b13(mm)	673.5	673.5	673.5
5.1	Travel speed, laden/unladen	km/h	17/17.5	17/17.5	17/17.5
5.2	Lift speed, laden/unladen	m/s	0.5/0.55	0.5/0.55	0.5/0.55
5.3	Lowering speed, lade/unladen	m/s	0.4/0.45	0.4/0.45	0.4/0.45
5.5	Drawbar pull, laden/unladen	N	16700/11200	16500/11100	16300/10900
5.7	Gradeability, laden/unladen	%	26/26	22/24	20/22
5.9	Acceleration time, laden/unladen	s	4.4/3.5	4.8/3.8	5.2/4.3
5.1	Service brake		M/H	M/H	M/H
7.1	Engine manufacturer/type		HYUNDAI/ Doosan DM02-MFF10	HYUNDAI/ Doosan DM02-MFF10	HYUNDAI/ Doosan DM02-MFF10
7.2	Engine power according to ISO 1585	kW	45	45	45
7.3	Rated speed	min-1	2400	2400	2400
7.4	Number of cylinders/displacement	(-)/cm3	4/2392	4/2392	4/2392
7.5	Fuel consumption according to DIN EN 16796	l/h	3.3	3.6	4.1
7.6	Turnover output according to VDI 2198	t/h	198	238	281
7.7	Turnover efficiency according to VDI 2198	t/l	33	39	41
7.1	Battery voltage/nominal capacity	(V)/(Ah)	12V/90AH	12V/90AH	12V/90AH
8.1	Type of drive unit		Hydrodynamictransm	Hydrodynamictransm	Hydrodynamictransm

Technical datasheet (HYUNDAI/Doosan D24 EU5)

10.1	Operating pressure for attach-ments	bar	165	185	206
10.2	Oil volume for attachments	l/min	30	30	30
10.4	Fuel tank, capacity	l	62.7	62.7	62.7
10.7	Sound pressure level at the driver's seat	dB(A)	85	85	85

Technical datasheet (HYUNDAI D24 EU5)(DN02)

1.1	Manufacturer		KION-STILL	KION-STILL	KION-STILL
1.2	Manufacturer's type designition		RCD25 Plus	RCD30 Plus	RCD35 Plus
1.3	Drive: electric (battery type, mains, ...), diesel, petrol, fuel gas		diesel	diesel	diesel
1.4	Operator type: hand, pedestrian, standing, seated, order-picker		seated	seated	seated
1.5	Rated capacity/rated load	Q(t)	2.5	3	3.5
1.6	Load centre distance	c(mm)	500	500	500
1.8	Load distance, centre of drive axle to fork	x(mm)	494	504	509
1.9	Wheelbase	y (mm)	1760	1760	1760
2.1	Service weight	(kg)	4250	4620	5060
2.2	Axle loading, laden front/rear	(kg)	5820/840	6660/940	7420/1160
2.3	Axle loading, unladen front/rear	(kg)	1990/2260	1940/2680	1880/3180
3.1	Tyres: solid rubber, superelastic, pneumatic, polyurethane		Solid rubber	Solid rubber	Solid rubber
3.2	Tyre size, front		28x9-15	28x9-15	28x9-15
3.3	Tyre size, rear		6.5-10	6.5-10	6.5-10
3.5	Wheels, number front/rear (x = driven wheels)		2x/2	2x/2	2x/2
3.6	Tread, front	b10 (mm)	1030	1030	1030
3.7	Tread, rear	b10 (mm)	953	953	953
4.1	Tilt of mast/fork carriage forward/backward	α/β (°)	6/12°	6/12°	6/12°
4.2	Height, mast lowered	h1(mm)	2137	2137	2137
4.3	Free lift	h2(mm)	150	150	150
4.4	Lift	h3(mm)	3000	3000	3000
4.5	Height, mast extended	h4(mm)	3715	3715	3715
4.7	Height of overhead guard (cabin)	h6(mm)	2231	2231	2231
4.8	Height of seat/stand-on platform	h7(mm)	1233	1233	1233
4.81	Distance front axle to SIP at middle seat position	h9(mm)	976	976	976
4.12	Coupling height	h10(mm)	310	310	310
4.19	Overall length	l1(mm)	3735	3745	3830
4.2	Length to face of forks	l2(mm)	2735	2745	2830
4.21	Overall width	b1/b2(mm)	1265	1265	1265
4.22	Fork dimensions ISO 2331	s/e/l(mm)	45/100/1000	45/122/1000	50/150/1000

Technical datasheet (HYUNDAI/Doosan D24 EU5)

4.23	Fork carriage to ISO 2328 , class/type A, B		2A	3A	3A
4.24	Fork-carriage width	b3(mm)	1040	1100	1100
4.31	Ground clearance, laden, below mast	m1(mm)	146	145	144
4.32	Ground clearance, centre of wheelbase	m2(mm)	163	161	159
4.33	Aisle width with pallet 1000 x 1200 across forks	Ast(mm)	4145	4145	4220
4.34	Aisle width with pallet 800 x 1200 along forks	Ast(mm)	4345	4345	4420
4.35	Turning radius	Wa(mm)	2440	2440	2510
4.36	Minimum pivoting point distance	b13(mm)	673.5	673.5	673.5
5.1	Travel speed, laden/unladen	km/h	17/17.5	17/17.5	17/17.5
5.2	Lift speed, laden/unladen	m/s	0.5/0.55	0.5/0.55	0.5/0.55
5.3	Lowering speed, lade/unladen	m/s	0.4/0.45	0.4/0.45	0.4/0.45
5.5	Drawbar pull, laden/unladen	N	16700/11200	16500/11100	16300/10900
5.7	Gradeability, laden/unladen	%	26/26	22/24	20/22
5.9	Acceleration time, laden/unladen	s	4.4/3.5	4.8/3.8	5.2/4.3
5.1	Service brake		M/H	M/H	M/H
7.1	Engine manufacturer/type		HYUNDAI DN02-MFF10	HYUNDAI DN02-MFF10	HYUNDAI DN02-MFF10
7.2	Engine power according to ISO 1585	kW	45	45	45
7.3	Rated speed	min-1	2400	2400	2400
7.4	Number of cylinders/displacement	(-)/cm3	4/2392	4/2392	4/2392
7.5	Fuel consumption according to DIN EN 16796	l/h	3.3	3.6	4.1
7.6	Turnover output according to VDI 2198	t/h	198	238	281
7.7	Turnover efficiency according to VDI 2198	t/l	33	39	41
7.1	Battery voltage/nominal capacity	(V)/(Ah)	12V/90AH	12V/90AH	12V/90AH
8.1	Type of drive unit		Hydrodynamictransm	Hydrodynamictransm	Hydrodynamictransm
10.1	Operating pressure for attachments	bar	165	185	206
10.2	Oil volume for attachments	l/min	30	30	30
10.4	Fuel tank, capacity	l	62.7	62.7	62.7

10.7	Sound pressure level at the driver's seat	dB(A)	85	85	85

Description of technical data-sheet

⚠ CAUTION

The parameters listed in the technical datasheet are examples of parameters for a specific configuration model in this range and are for reference only.

The model configuration delivered to the user may differ from the technical datasheet. For details, please refer to the forklift product datasheet provided with the vehicle or in the sales contract/quotation signed externally by the manufacturer or with the delivery receipt.

A

Additional capacity rating plate. 106
Address of manufacturer. I
Adjusting the fork spacing. 107
Adjusting the steering column. 78
Adjust joysticks. 179
Antistatic belt
Checking the condition. 184
Attachments
Special risks. 33

B

Battery
Disposal. 18
Battery acid. 42
Before exiting the truck. 121
Bonnet — Open - Closed. 91
Brake fluid. 46
Brake system. 87

C

Capacity rating plate. 103
Changes to the industrial truck. 26
Change the drive axle gearbox oil. 176
Changing the air filter insert and checking the vacuum switch. 159
Changing the drive direction. 84
Changing the fork arms. 198
Changing the hydraulic oil. 195
Changing the hydraulic transmission crude oil filter. 172
Changing the oil of the hydraulic transmission gear. 174
Changing wheels. 182
Charging the fuel system. 163
Checking and cleaning the radiator fins. . 165
Checking condition and performance. . . . 73
Checking installation of the tilt cylinder. . 196
Checking other bearings and connections and lubricating. 187
Checking that the brake system is functioning properly. 187
Checking the battery status. 190
Checking the bonnet locking devices. . . 186
Checking the brake fluid level in the brake fluid reservoir. 178
Checking the condition and tightness of cables and connections. 191
Checking the connecting bolts connecting the lift mast to the drive axle. 186
Checking the coolant level. 166, 171
Checking the drive axle gearbox oil. 177
Checking the engine oil level. 159, 167
Checking the fuse box. 191
Checking the hydraulic oil level. 194
Checking the hydraulic system for leaks. 192
Checking the installation of the drive axle. 178
Checking the joystick bellows. 179
Checking the oil level of the hydraulic transmission. 175
Checking the pedal group for ease of movement and lubricating as required. 187
Checking the preload of the double hoses (if equipped with attachments). 205
Checking the transmission gear and drive axle for leaks. 175
Checking the tyre inflation pressure. . . . 181
Checking the wheels. 180
Check the fork arms and the fork arm quick-release apparatus. 200
Check the installation of the engine, hydraulic transmission gear and drive axle. 178
Check the working condition and installation of the lift mast and lifting chains. . . 201
Clean and lubricate the steering axle. . . 185
Cleaning
Truck. 158
Cleaning and lubricating the sideshift forks* and checking connections. 205
Cleaning the air filter insert. 160
Cleaning the truck. 158
Clean the crude oil filter of the hydraulic transmission gear. 173
Commissioning. 7
Conformity marking. 4
Consumables. 42
Brake fluid safety information. 46
Coolant and cooling fluid safety information. 46
Disposal. 48
Safety information for diesel fuel. 44
Safety information for handling battery acid. 42
Safety information for handling hydraulic fluid. 42
Safety information for handling oils. . . 43

Contact details. I
Controller and display unit. 57
Coolant and cooling fluid. 46
Copyright and trademark rights. 13

D

Daily inspection items. 70
Damage. 29
Damage, faults. 28
Danger to employees. 38
Date of edition of this manual. 15
Declaration of conformity. 5
Defects. 29
Definition of directions. 17
Description of technical datasheet. 217
Description of use and climatic conditions. 11
Diesel engine emissions
  Checking. 41
Diesel fuel. 44
Dimensions overview. 208
Discharge water in the fuel filter/water trap.. 169
Display unit. 59
Disposal
  Battery. 18
  Components. 18
Disposal of old trucks. 135
Documentation scope. 12
Driver rights, duties and rules of behaviour. 24
Drivers. 24
Driving. 83
  Ascending gradients. 117
  Descending gradients. 117
Driving on lifts. 119
Driving on loading bridges. 118

E

EC declaration of conformity in accordance with the Machinery Directive. 5
Emergency exit for models with rear window. 50
Emissions
  Heat. 50
  Radiation. 50
Emptying the fuel filter/water trap. 161
Engine shutdown. 82
Eye bolts. 127

F

Fire extinguisher. 20
First service plan
  HYUNDAI/Doosan. 152
First service schedule (Weichai WP3.2). 146
Fork arms
  Length. 30
Forward travel. 83

G

Gas spring with locking function — optional. 92
General. 3
General view. 56

H

Handling gas springs and accumulators. . 31
Hazards and countermeasures. 36
Horn operation. 78
Hydraulic fluid. 42

I

Illustrations. 17
Improper use. 9
In-use compliance inspection. 141
Inching control. 84
Inspection and maintenance data. 142
Insulation testing. 40
Insurance cover on company premises. . . 26
Intended use. 8

L

List of abbreviations. 15
List of emission parts and components under warranty. 141
Load
  Driving. 114
  Picking up. 110
  Setting down. 115
Load centre distance and load capacity. 103
Loading and unloading the truck. 127
Lubricating the lift mast and chains with chain spray. 203
Lubricating tilt cylinder bearings. 197

M

Maintenance intervals. 138
Manually lowering the forks. 52

Measuring the insulation resistance of the electrical system. 41
Medical devices. 29
Misuse of safety systems. 29

N

Nameplate. 6
Noise level. 48

O

Oils. 43
Operating attachments. 101
Operating company. 23
Operating instructions
Issue date. 13
Operating safely. 20
Operating the lifting device. 100
Overhead guard
Drilling. 28
Roof loads. 28
Welding. 28

P

Packaging. 18
Parking. 86
Particle filter
Regeneration. 93
Picking up a load. 108
Pre-shift checks. 69
Precautions. 10
Prohibition of use by unauthorised persons. 25

R

Recommended fuels and oils. 143
Regular inspections. 40
Regular maintenance. 145
Relays and fuses overview. 61
Replacing the fine hydraulic transmission oil filter. 172
Replacing the return oil filter. 193
Replacing the suction filter. 193
Replenishment of Engine Oil. 167
Residual dangers. 32
Residual risks. 32
Retrofitting. 26
Reverse travel. 84

S

Safety guidelines. 20
Safety information
Active medical equipment. 21
Gas springs. 21
Non-ionising radiation. 21
Speed reduction. 20
Welding work. 21
Safety information for inspection and maintenance work. 138
Safety inspection. 40
Safety regulations for maintenance
General information. 139
Safety regulations when driving. 53
Safety warnings. 140
Scope of the documentation
CO solutions. 12
Seat belt monitoring and alarm function. . 77
Serial number. 6
Service plan before first start. 68
Setting chocks. 123
Setting the display unit. 89
Shutting down the truck. 132
Signal terms. 14
Spare parts list. II
Special risks. 33
Stability. 22, 33
Starting on an incline. 85
Starting the engine. 80
Steering system. 86
Checking for correct function. 78
Storing the truck. 132
Switch panel. 60

T

Technical datasheet (HYUNDAI/Doosan D24 EU5)(DM02). 212
Technical datasheet (HYUNDAI D24 EU5)(DN02). 215
Technical datasheet (WEICHAI). 209
Technical description. 2
Tightening the wheel nuts. 182
Tip-over of the truck. 22
Tow coupling. 119
Towing. 125
Transport. 122
Transporting pallets. 109

Transporting suspended loads. 109
Tyres
Safety principles. 29

U

Update of this manual. 15
Use a truck or flatbed trailer to carry the forklift truck. 124
Using after storage or decommissioning. 133
Using working platforms. 11

V

Vibration frequency. 48

W

Warning Label Diagram. 58
Warning regarding non-original parts. . . . 28

STILL GmbH

1289 801 1521 EN - 07/2024 - 08