Original instructions

Diesel forklift truck

RCD40
RCD50

4231 4233

60128011601 EN - 04/20223 - 08

first in intralogistics

Address of manufacturer and contact details ▷

STILL GmbH
Berzeliusstraße 10
22113 Hamburg, Germany
Tel. +49 (0) 40 7339-0
Fax: +49 (0) 40 7339-1622
Email: info@still.de
Website: http://www.still.de
Produced in China for STILL

Rules for the operating company of industrial trucks

In addition to these operating instructions, a code of practice containing additional information for the operating companies of industrial trucks is also available.

This guide provides information for handling industrial trucks:

- Information on how to select suitable industrial trucks for a particular area of application
- Prerequisites for the safe operation of industrial trucks
- Information on the use of industrial trucks
- Information on transport, initial commissioning and storage of industrial trucks

Internet address and QR code ▷

The information can be accessed at any time by pasting the address **https://m.still.de/vdma** in a web browser or by scanning the QR code.

1 Introduction

General information 2
Truck data 2
Intended use 3
Improper use 4
Description of use and climatic conditions 4
Modifications to the truck 5
Symbols used 5
Conformity marking 6
EMC – Electromagnetic compatibility 7
Declaration that reflects the content of the declaration of conformity 8

2 Safety

Regulations 12
Safety guidelines 12
Definition of terms used for responsible persons 15
Operating company 15
Specialist 15
Competent person 15
Drivers 16
Exhaust gases 17
Ground condition for using the truck 17
Safety Regulations Relative to Forklift Use 17
Carrying out regular inspections on the truck 18
Improper use 18
Hazard assessment 20
Residual risks 21
Stability 21
In the case of tip-over 22
Safety regulations when driving 23
Safety regulations in case of accidental lateral tipping 24
Exercise caution when handling gas springs and accumulators 24

Safety regulations for handling consumables 25
Permissible consumables 25
Oils 26
Hydraulic fluid 27
Battery acid 27
Disposal of consumables. 28

Environmental considerations 29
Handling consumables 29
Disposing of components and batteries 29
Packaging 30

Emissions 30

Fitting attachments 31

Manually lowering the fork arms with ISO 33

Emergency exit from driver's cab with windows 34

3 Overview

General view 36
General front view 36
General rear view 37

Instrumentation and controls 38
Overview of the driver’s compartment. 38
Display unit 39

Truck identification. 40
Chassis number. 40
Serial number 40
Nameplate 40
UK-Importer 41
Engine plate. 42

Location of the decals 43

4 Use and operation

Truck transport and lifting 48
Removing the mast 48
Use a truck or flatbed trailer to carry the forklift truck 48
Environmental conditions for transport and storage 49
Lifting the truck with a crane 50

Commissioning the truck 51

Remaining ready for operation 52
Pre-shift checks 52
Daily checks before use 52
Seat belt status and performance checks 53
Checking the condition of the tyres 54
Check the wheel nuts for correct condition 55
Check the condition and operation of chain 56
Checking the coolant level. 57
Checking the engine oil level. 59
Transmission oil level inspection procedure 60
Checking the drive axle gearbox oil. 60
Checking the hydraulic oil level 61

Refuelling. 62

Diesel fuel - Specifications. 62

Mounting/dismounting 63

Sealt and seat belt 64
Seat belt and performance checks 64
Adjusting the seat and seat belt 65
Fastening the seat belt 66
Seat belt monitoring and alarm function 68
Driver presence monitoring 69

Switches 70
Ignition device 70
Lighting and turn indicator switch 71
Warning horn; 72
Direction selection lever 73

Adjusting the position of steering wheel 73

Start the engine 74

Diesel Particulate Filter (DPF) 76
Diesel oxidation catalytic converter 76
Diesel particle filter 76
Regeneration 76
Regeneration indication. 81

Driving 82
Driving 82
Forward 83
Reversing 83
Changing direction of travel. 84

Brake system 85
Driving brake pedal and inching pedal 85
Operating the service brake 85
Parking brake 86

Lifting system and attachments 87
Operating the lifting device 87
Operating attachments 88

Handling loads 90
Safety regulations when handing loads 90
Load centre distance and load capacity 90
Capacity plate 91
Before lifting a load 92
Transporting pallets 92
Danger area 92
Transporting suspended loads 93
Adjusting the fork arm distance 95
Picking up a load 96
Transporting loads 100
Driving on ascending and descending gradients 103
Driving on lifts 104
Transport of swinging loads 105
Driving on loading bridges 106
Setting down loads 107

Towed load 109

Forklift towing 110

Leaving the truck temporarily 110

Leaving the truck 111

Truck storage 113
Truck Storage 113
Disposal of old trucks 115

Cleaning 116
Cleaning the truck 116
Cleaning the electrical system 118
Lubricate the lift mast and chains with chain spray 119
After washing 120

Decommissioning 121
General information 121
Measures to be implemented when decommissioning 121
Recommissioning after storage 122
Permanent decommissioning (scrapping) 123

5 Maintenance

General information 126

Personnel qualifications 127

Preliminary maintenance operations 127

Scheduled truck maintenance 129
Maintenance — 500 hours 129
Maintenance — 1000 hours 131
Maintenance - 3000 hours 134
Supply table 137

Providing access to maintenance points 138
Opening the bonnet 138
Closing the bonnet 139
Installing and removing the bottom plate 140

Maintenance service 142
Changing the engine oil 142
Changing the engine oil filter 144
Changing the fuel filter cartridge 145
Replacing the water trap 145
Draining water in the water trap 147
Fuel system air bleeding 149
Changing the coolant 150
Checking the V-belt tensioning 152
Replacing the V-belt 153
Cleaning the air filter 154
Changing the air filter 155
Changing the hydraulic transmission crude oil filter 156
Changing the oil of the hydraulic transmission 157
Wheel replacement procedure 158
Checking the drive axle gearbox oil 160
Fill up the hydraulic oil 160
Changing the suction filter and return filter 160
Replacing the breather filter 161
Removing the forks 162
Fitting the forks 163
Checking the fork arms for wear and deformation 163
Checking the operation and installation of the lift mast, lifting chain and limit block 164
Lubricate the lift mast and chains with chain spray 165
Lubricating the lift mast and tilt cylinder bearings 166
Adjusting the length of the lift chains, and lubricating using chain spray 167
Checking the structure of the overhead guard 169

6 Technical datasheet

Dimensions 172
VDI Datasheet for RCD40 173
VDI Datasheet for RCD50 175
Mast specification 177

Annex

7 Diagrams

Electric schematic diagram 188
Hydraulic diagram 189
Brake diagram 190

1

Introduction

General information

The truck described in these operating instructions corresponds to the applicable standards and safety regulations.

The truck has been fitted with advanced technology. Following these operating instructions will allow the truck to be handled safely. By complying with the specifications in these operating instructions, the functionality and the approved features of the truck will be retained.

These operating instructions provide the necessary information and help to avoid accidents and to keep the truck ready for operation beyond the warranty period.

Therefore:

- Read the operating instructions before commissioning the truck and follow the instructions during operation.
- Follow all of the safety information contained in the operating instructions and on the truck.

Operating on public roads

If the truck is to be operated on public roads, the truck must conform to the national regulations for the country in which it is being used. The required operating permit must be obtained from the relevant authorities.

Insurance cover on company premises

In many cases, company premises are restricted public traffic areas.

NOTE

It is advisable to review the company liability insurance to ensure that insurance covers the industrial truck with respect to third parties in the event of damage caused in restricted public traffic areas.

Truck data

We recommend that you record all basic forklift truck data in the following table so that it is available if required by the sales network or authorised service centre.

Type	
Serial number	
Date of delivery	

Intended use

The industrial truck may be used only for its intended purpose.

The industrial truck is intended for moving and lifting the loads specified on the capacity rating plate while observing the instructions given in these operating instructions.

Damage and faults

Damage or other faults on the industrial truck or the attachment must be immediately reported to supervisory personnel. Industrial trucks and attachments that are not operationally safe must not be used until they are properly repaired.

Do not remove or deactivate safety systems and switches. Fixed set values may only be changed with the approval of the manufacturer.

Danger area

The danger area is the area within which people may be at risk due to the movements of the industrial truck, its working equipment, its lifting accessories (e.g. attachments) or the goods that are carried. This also includes the area that can be affected by falling cargo or by lowering or falling working equipment.

People must not stand in the danger area of an industrial truck.

Working area

It is only permitted to drive on routes authorised for traffic by the operating company or its representatives. Traffic routes must be free from obstacles. Loads may only be set down and stored in the relevant areas provided for this purpose.

Roadways

Roadways must be sufficiently firm, level and free from objects. Drainage channels, level crossings and similar obstacles must be evened out and, if necessary, ramps must be provided so that trucks can drive over these obstacles with as few bumps as possible.

Industrial trucks may only be used on roadways that do not have curves that are too sharp, gradients that are too steep or entrances that are too narrow or low.

Gradients may not exceed the values given in the operating instructions and must have a sufficiently rough surface. The top and bottom of the gradient must feature smooth and gradual transitions to prevent the load from scraping the ground and the undercarriage from being damaged.

The permitted area load and point load of the roadways must not be exceeded. There must be sufficient distance between the highest points of the industrial truck or the load and the fixed points of the surroundings.

Within the EU, the applicable version of directive 89/654/EEC (minimum safety and health requirements for the workplace) must be observed. The respective national guidelines apply for areas outside the EU.

Hazardous areas on roadways must be safeguarded or indicated by the standard road traffic signs and, if applicable, by additional warning signs.

When driving on public roads, the national regulations pertaining to drivers and industrial trucks must be observed. Observe country-specific restrictions for winter road conditions.

Fire protection

The operating company must ensure that suitable fire protection is available for the relevant application in the surroundings of the industrial truck. Depending on the application, additional fire protection on the industrial truck may be necessary. If in doubt, the responsible fire brigade can be contacted.

Attachments

Attachments may only be used for their intended purpose. Drivers must be taught how to operate the attachments.

Attachment operating instructions are enclosed for industrial trucks that are delivered from the factory with an attachment. Before commissioning an industrial truck with an attachment, check that loads are handled safely. Depending on the type of attachment, it may be necessary to make adjustments, e.g. pressure settings or adjusting stops and operating speeds. Corresponding instructions can be found in the operating instructions for the attachment.

If attachments are not supplied with the industrial truck, the specifications of the industrial truck manufacturer and the attachment manufacturer must be observed.

Mounting the attachment and connecting the energy supply for power-driven attachments must only be performed by authorised personnel in accordance with the information provided by the manufacturers. After each assembly process, the function of the attachment must be checked prior to initial commissioning.

The permissible load capacity of the attachment and the permissible load (load capacity and load moment) of the industrial truck must not be exceeded by the combination of attachment and payload; see additional capacity rating plate.

Modifications, in particular attachments or conversions, are not permitted to be made to the industrial truck without the manufacturer's approval.

Improper use

⚠ DANGER

Risk of fatal and non-fatal injury.

Only use the truck as intended.

The truck must only be used as described in these operating instructions.

The operating company or driver is liable if the truck is used in a manner that is not permitted.

The following list serves by way of example and does not claim to be exhaustive.

It is **not** permitted:

- To carry people if the truck is not designed for that purpose
- To use the truck in areas where there is a risk of fire or explosion
- To stack/unstack on slopes
- To stand on the fork arms when raised
- To exceed the maximum load capacity
- To increase the load capacity of the truck, e.g. by attaching an additional weight

Description of use and climatic conditions

- Indoor and outdoor use
- Ambient temperature of -20°C ~ +40°C
- Use at up to 2000 metres above sea level
- Standardised degrees of protection provided by the enclosure of the electrical equipment: IP20.

Modifications to the truck

Unauthorised truck modification is not permitted.

Only in the event that the truck manufacturer is no longer in business and there is no successor in the interest to the business, may the user arrange for a modification or alteration to a powered industrial truck, provided, however, that the user

- arranges for the modification or alteration to be designed, tested and implemented by an engineer(s) expert in industrial trucks and their safety,
- maintains a permanent record of the design, test(s) and implementation of the modification or alteration,
- approves and makes appropriate changes to the capacity plate(s), decals, tags and instruction handbook, and
- affixes a permanent and readily visible label to the truck stating the manner in which the truck has been modified or altered, together with the date of the modification or alteration and the name and address of the organization that accomplished those tasks.

Symbols used

The terms DANGER, WARNING, CAUTION, NOTE and ENVIRONMENT NOTE are used in these operating instructions. They are intended to draw attention to specific dangers or unusual information that needs to be highlighted:

⚠ DANGER

Means that failure to comply can risk the lives of others and/or cause major damage to equipment.

⚠ WARNING

Means that failure to comply can result in the risk of serious physical injury and/or major damage to equipment.

⚠ CAUTION

Means that failure to comply can result in the risk of major damage to equipment or destruction.

NOTE

This means that particular attention must be paid to the specific technical meaning because this may not be obvious, even to a specialist.

ENVIRONMENT NOTE

The instructions listed here must be complied with otherwise environmental damage may result.

⚠ CAUTION

This label is found on the truck in the areas where particular care and attention are required from the operator.

Refer to the appropriate section in these operating instructions.

For your safety, additional symbols are also used. Please take these different symbols into consideration.

Conformity marking

The manufacturer uses the conformity marking to document the conformity of the industrial truck with the relevant directives at the time of placing on the market:

- CE: in the European Union (EU)
- UKCA: in the United Kingdom (UK)
- EAC: in the Eurasian Economic Union

The conformity marking is applied to the nameplate. A declaration of conformity is issued for the EU and UK markets.

An unauthorised structural change or addition to the industrial truck can compromise safety, thus invalidating the declaration of conformity.

▷

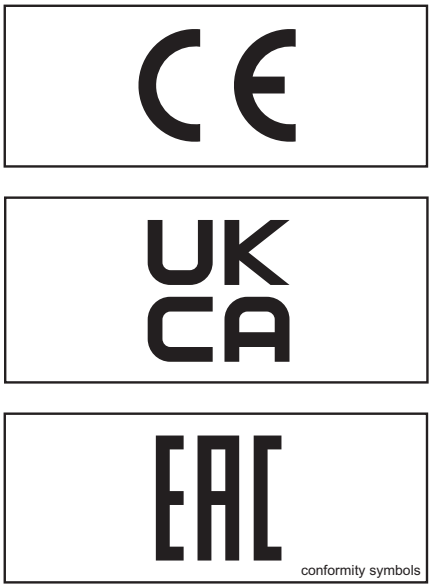

conformity symbols

EMC – Electromagnetic compatibility

Electromagnetic compatibility (EMC) is a key quality feature of the truck.

EMC involves

- limiting the emission of electromagnetic interference to a level that ensures the troublefree operation of other equipment in the environment.
- ensuring sufficient resistance to external electromagnetic interference so as to guarantee proper operation at the planned usage location under the electromagnetic interference conditions to be expected there .

An EMC test thus firstly measures the electromagnetic interference emitted by the truck and secondly checks it for sufficient resistance to electromagnetic interference with reference to the planned usage location . A number of electrical measures are taken to ensure the electromagnetic compatibility of the truck .

⚠ CAUTION

The EMC regulations for the truck must be observed.

When replacing truck components the protective EMC components must be installed and connected again.

Declaration that reflects the content of the declaration of conformity

Declaration

STILL GmbH
Berzeliusstraße 10
22113 Hamburg Germany

We declare that the specified machine conforms to the most recent valid version of the directives specified below:

Industrial truck type	**corresponding to these operating instructions**
Model	**corresponding to these operating instructions**

– "Machinery Directive 2006/42/EC" [1]
– "Supply of Machinery Safety Regulations 2008, 2008 No. 1597" [2]

Personnel authorised to compile the technical documents:

See declaration of conformity

STILL GmbH

The declaration of conformity document is supplied with the industrial truck. The declaration shown explains the conformity with the provisions of the EC Machinery Directive and the Supply of Machinery Safety Regulation 2008, 2008 No. 1597.

An unauthorised structural change or addition to the industrial truck can compromise safety, thus invalidating the declaration of conformity.

The declaration of conformity must be carefully stored and made available to the responsible authorities if necessary. It must also be

1 For the markets of the European Union, the EU candidate countries, the EFTA States and Switzerland

2 For the United Kingdom market

handed over to the new owner if the industrial truck is sold on.

Declaration that reflects the content of the declaration of conformity

2

Safety

Regulations

Regular safety inspection

Periodic safety inspections are essential to keep your truck safe and in good working order.

Europe: National laws based on Directives 95/63/EC, 99/92/EC and 2001/45/EC require that the truck is checked regularly by a competent person to ensure that it is in good condition.

Germany: Ordinance on Industrial Safety and Health (BetrSichV).

China: National Standard GB 10827.1-2014 of the People's Republic of China.

NOTE

Observe the national regulations for your country!

Safety guidelines

The operating company or the person it has commissioned must ensure that the driver understands all safety information and that all directives and safety regulations are observed.

During training, drivers must familiarise themselves with the following:

- The operating conditions of the working area
- The specific technical characteristics of the industrial truck
- The operation of attachments

Driving, control and steering operations must be practised with an unloaded industrial truck until they are completely mastered. Only then may a loaded industrial truck be used for practice.

Operating safely

DANGER

The industrial truck must not be used by unauthorised persons.

Only persons who are trained, authorised and commissioned to operate the industrial truck may have access to the industrial truck.

Controlled access is possible via the switch key or an input unit with a keypad or with a transponder.

DANGER

Safety systems (e.g. the seat switch) are in place to ensure safety.

Under no circumstances may any safety systems be disabled.

⚠ DANGER

Risk of fire due to hot exhaust gases!

Exhaust gases become so hot that materials in the immediate vicinity may smoulder or burn.

Deposits of combustible materials may ignite in the vicinity of hot components, e.g. exhaust pipes.

– Observe the following measures!

– Maintain an appropriate safety distance between combustible materials and the exhaust gas outlet.
– If materials start to burn, take appropriate fire extinguishing measures immediately.
– Remove deposits on hot components.
– Keep away from flammable liquids.

⚠ WARNING

Risk of burns due to hot exhaust gases.

Exhaust gases and exhaust-gas-routing components become so hot that direct body contact can cause burns.

– Do not touch hot components.

⚠ WARNING

Risk of accident if the work area is insufficiently lit!

Ensure that there is sufficient light in the working area or use working spotlights.

⚠ CAUTION

Various pieces of special equipment are connected to the "speed reduction" special function. This is purely an assistance function, and the driver must not rely solely on this function during operation.

The driver is always responsible for safe operation.

NOTE

If the truck is equipped with a fire extinguisher, make sure that you familiarise yourself with how to use it in the event of an emergency. Instructions for use are provided on the fire extinguisher.

Working on the truck

⚠ DANGER

Any additional bores or welding on the overhead guard will compromise its rigidity.

It is therefore strictly prohibited to drill holes in the overhead guard or to perform welding work on it.

⚠ WARNING

Depending on the duration of use and operating time, components carrying exhaust gases and exhaust air may become hot.

Protective equipment must therefore be worn.

⚠ WARNING

In trucks with an accumulator, serious injuries may occur if the accumulator is handled incorrectly.

Before starting work on the accumulator, it must be depressurised.

Contact your authorized dealer.

⚠ CAUTION

Welding operations on other parts of the truck can cause damage to the electronics.

Therefore, always disconnect the battery and all connections to the electronic controls before performing any welding work.

⚠ CAUTION

Various functions are supported by gas springs. Gas springs are subjected to a high internal pressure of up to 300 bar.

Gas springs may be removed only when they are not under pressure, and must never be opened without prior instruction. Any kind of damage, lateral forces, buckling, temperatures in excess of 80°C and heavy contamination must be avoided under all circumstances.

Damaged or defective gas springs must be replaced immediately.

Contact your authorized dealer.

Safety information for electromagnetic compatibility

⚠ WARNING

In operating areas with magnetic fields that have a magnetic flux density greater than 5 mT, unintentional truck and lift mast movements cannot be entirely excluded in unfavourable circumstances.

For magnetic fields with magnetic flux densities greater than 5 mT, components developed especially for this purpose must be used.

Contact your authorized dealer.

Magnetic flux densities greater than 5 mT can occur in induction furnaces for metal smelting (e.g. aluminium), with resistance welders for seam or spot welding, or on strong demagnetisation coils. However, as the flux densities reduce to a fraction as the distance increases by e.g. 50 cm, actual influences are not known to occur in practice.

Electromagnetic radiation emitted by the industrial truck is far below the permissible limit values in Europe. The immunity to electromagnetic radiation is above the minimum legal values.

⚠ WARNING

If a driver has active medical equipment such as a pace makers, defibrillator, cochlear implant, insulin pump or hearing aid, there is a possibility that the capabilities of the driver could be impaired.

The operating company must take drivers whose capabilities are restricted due to implanted or body-worn medical equipment into account in the hazard assessment. The instructions of the physician and of the manufacturer of the medical equipment must be followed.

⚠ WARNING

Risk from non-ionising radiation from retrofitted devices (e.g. radio transmitter).

Persons with active or non-active implanted medical equipment must not be exposed to excessive non-ionising radiation from the electromagnetic fields of retrofitted devices.

The guidelines from the respective device manufacturer must be followed. If necessary, fit a notice warning about non-ionising radiation within the field of vision of the driver.

Definition of terms used for responsible persons

Operating company

The operating company is the natural or legal person who operates the truck or on whose authority the truck is used.

The operating company must ensure that the truck is only used for its proper purpose and in compliance with the safety regulations set out in these operating instructions.

The operating company must ensure that all users read and understand the safety information.

The operating company is responsible for the scheduling and correct performance of regular safety checks.

We recommend that the national specifications for the performance of safety checks are observed.

Specialist

A qualified person is defined as a service engineer or a person who fulfils the following requirements:

- A completed vocational qualification that demonstrably proves their professional expertise. This proof should consist of a vocational qualification or a similar document.
- Professional experience indicating that the qualified person has gained practical experience of industrial trucks over a proven period during their career During this time, this person has become familiar with a wide range of symptoms that require checks to be carried out, such as based on the results of a hazard assessment or a daily inspection
- Recent professional involvement in the field of the industrial truck test in question and an appropriate further qualification are essential. The qualified person must have experience of carrying out the test in question or of carrying out similar tests. Moreover, this person must be aware of the latest technological developments regarding the industrial truck to be tested and the risk being assessed

Competent person

A competent person is a specialist in the field of industrial trucks who has:

- Successfully completed training, as at least a service engineer for industrial trucks
- Many years of professional experience with industrial trucks
- Knowledge of the accident prevention regulations
- Knowledge of the relevant national technical regulations

The competent person is able to assess the condition of industrial trucks in terms of health and safety.

Drivers

Trucks must be driven only by persons who:

- Are at least 18 years of age
- Have been trained in performing this task
- Have demonstrated their ability to perform this task, e.g. driver's licence

Specific knowledge of the truck to be operated is also required.

The contract for driving a truck must be provided in writing. Observe the national regulations for your country.

NOTE

A driver's licence for public roads is required in order to drive industrial trucks on public roads. Observe the national regulations for your country.

Rights, duties and rules of behaviour for the driver

The driver must:

- Be informed of his rights and duties
- Wear sturdy footwear to ensure safe driving and braking
- Wear protective equipment appropriate to the application conditions (protection suit, safety shoes, safety helmet, protection goggles, gloves)
- Have read and understood the operating instructions
- Have familiarised themselves with safe operation of the truck
- Be physically and mentally able to drive the truck safely

DANGER

Risk of fatal injury due to impaired reactions!

Do not perform any work on or with the truck while under the influence of drugs, alcohol or medication that impair your reactions.

Prohibition of use by unauthorised persons

The driver is responsible for the truck during working hours. He must not allow unauthorised persons to operate the truck.

When leaving the truck, the driver must secure it against unauthorised use, e.g. by removing the key.

Exhaust gases

⚠ CAUTION

Risk to health from exhaust gases! Exhaust gases from internal combustion engines are harmful to your health. In particular, the soot particles contained in the diesel exhaust gas can cause cancer. Letting the combustion engine idle runs a risk of poisoning from the CO, CH and NO_x components contained in the exhaust gas

Modern exhaust gas treatment systems (e.g. catalytic converters, particle filters or comparable systems) can clean exhaust gases in a way that reduces the health hazard and risk of poisoning when operating the truck.

– Observe the national laws and regulations when using trucks with an internal combustion engine in entirely or partially enclosed working areas.

– Always ensure sufficient ventilation.

Ground condition for using the truck

In order for the truck to be used, suitable ground must have the following characteristics:

- Even and level
- Hard
- Sturdy
- Free of obstacles
- Properly prepared for the purpose

Safety Regulations Relative to Forklift Use

- The operator must familiarize himself with the forklift to be able to better describe any defects and assist maintenance personnel. The operator, trained and authorized to use the forklift, must be familiar with the controls and performances of the forklift.
- Any defect (squeaking, leaks, etc.) must be promptly reported because, if neglected, it could cause more serious failures/defects.
- Carry out the inspections indicated in the chapter on "Daily Inspections".

ENVIRONMENT NOTE

Report any oil and/or battery fluid leaks: they are dangerous and highly polluting.

⚠ CAUTION

If you notice a burning smell, stop the forklift and turn off the engine, then disconnect the battery.

Carrying out regular inspections on the truck

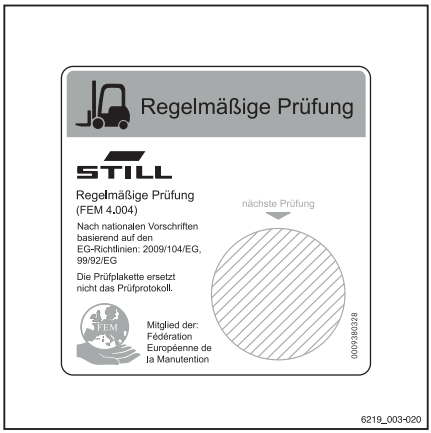

The operating company must ensure that the truck is checked by a specialist at least once a year or after particular incidents.

As part of this inspection, the technical condition of the truck must be completely tested with regard to accident safety. In addition, the truck must be thoroughly checked for damage that may have been caused by improper use. A test log must be created. The results of the inspection must be retained at least until a further two inspections have been carried out.

The inspection date is indicated by an adhesive label on the truck.

– Arrange for the authorised service centre to perform regular testing on the truck.
– Observe the guidelines for tests carried out on the truck in accordance with FEM 4.004.

The operating company is responsible for ensuring that any defects are remedied without delay.

– Notify your authorised service centre.

NOTE

In addition, observe the national regulations for the country of use.

Improper use

The operating company or driver, and not the manufacturer, is liable if the truck is used in a manner that is not permitted.

WARNING

One of the main causes of accidents is the driver ignoring or being unaware of the basic safe operating practices of the truck.

The following basic safe operating practices must be observed to ensure the safety of operators and others.

DANGER

High risk of injury, death and property damage.

Avoid the use of prohibited substances.

The list below is merely illustrative and not exhaustive.

Never operate the truck in environments with a potentially explosive atmosphere.

Do not carry another passenger (unless a "two-person seat" is installed).

Do not overload the truck (by exceeding the rated load indicated on the load designation

plate). Overloading can affect braking distances, truck stability and the strength of the lift mast.

Do not pick up an off-centre load.

Do not stand on the fork arms when they are lifting.

Do not increase the load capacity of the truck, by adding extra weight, for example.

Do not stack loads or turn when driving on a ramp.

Do not operate the truck on loose or greasy surfaces.

Do not drive on uneven or obstructed surfaces.

Never park the truck in a place that may obstruct fire extinguishers, fire escapes or aisles.

Do not dismount from the truck while it is moving.

Do not leave the truck unattended when the load is raised.

Never leave the vehicle unattended on a ramp.

When driving, do not place any part of your body outside the confines of the truck, lean on the edge of the truck or attempt to jump onto another truck or object.

Do not use the forks or any other part of the truck to push, pull or support items, unless the design permits this.

Operating steps

Adjust your driving style based on the conditions of the route, especially in hazardous work areas and when transferring loads.

Always look in the direction of travel.

Look out for pedestrians, to prevent the possibility of them becoming trapped between the truck and fixed obstacles.

Always sound the horn when approaching blind spots.

The truck and attachments must only be used for authorised applications.

Follow the instructions in the user manual when transporting loads.

On a ramp: Ensure that the truck has sufficient ground clearance to avoid striking the surface of the ramp. • Fully raise the load to avoid striking the surface of the ramp.

Drive a loaded truck forward when going uphill.

Drive a loaded truck in reverse when going downhill.

When raising a spreader, ensure that there is enough clearance.

When working near overhead power lines, observe the safety distances set by the competent authorities.

Only travel on surfaces that can withstand the combined weight of the truck and load.

Before leaving the operator’s driving position, turn off the ignition and make sure you have applied the parking brake.

When driving, maintain a safe stopping distance from any vehicle or pedestrians in front of you.

Drivers should move off, brake, turn and reverse smoothly. Avoid sudden stops, sharp turns and overtaking at dangerous or blind spots.

Ensure that there is adequate ventilation when using the truck in enclosed or partially enclosed areas.

Summary

A safe, competent operator is one who takes pride in the way they operate their truck, respects the goods they handle and follows the correct operating procedures. **They never take risks**.

Hazard assessment

In accordance with health and safety regulations, the employer is responsible for the safety and health of employees at work.

In Europe, Directive 89/391/EEC and the individual directives based thereon stipulate the minimum level of health and safety requirements. The directives are transposed into national law in the EU Member States. These can be expanded on a country-specific basis.

Countries outside the European Union also have regulations governing occupational health and safety. It is therefore essential to also observe national laws for health and safety.

For companies that operate industrial trucks, the hazard assessment is a key element in defining measures to eliminate or minimise the dangers connected with the operation of industrial trucks.

If the application conditions or the equipment on industrial trucks change, the hazard assessment must be adjusted.

Important points for the hazard assessment include:

- Roadways
- Poor visibility for the driver when the industrial truck is laden
- Working areas with hazardous materials
- Danger areas
- Fire protection
- Physical strain on the driver
- Attachments used with the industrial truck

Detailed information is also available in the VDMA (Verband Deutscher Machinen- und Anlagenbau — German Mechanical Engineering Industry Association) guideline "Employer's Guide for the Safe Use of Industrial Trucks", see the chapter entitled "Foreword".

Residual risks

Despite careful work and compliance with all applicable standards and regulations, the possibility of other dangers when using the industrial truck cannot be entirely excluded.

The industrial truck and its possible attachments comply with current safety regulations. Nevertheless, even when the truck is used for its proper purpose and all instructions are followed, some residual risk cannot be excluded.

Even beyond the narrow danger areas of the industrial truck itself, a residual risk cannot be excluded. Persons in the area around the industrial truck must exercise a heightened degree of awareness, so that they can react immediately in the event of any malfunction, incident or breakdown.

⚠ DANGER

Persons in the vicinity of the industrial truck must be instructed with regard to the dangers that arise through use of the truck.

These operating instructions also contain additional safety regulations.

Residual dangers can include:

- Escape of consumables due to leakages or the rupture of lines, hoses or containers,
- Risk of accident when driving over difficult ground such as gradients, smooth or irregular surfaces, or with poor visibility,
- Risk of falling, tripping, slipping etc. during movement of the industrial truck, especially in the wet, with leaking consumables or on icy surfaces,
- Risk of fire and explosion due to the battery and electrical voltages,
- Human error,
- Disregarding the safety regulations,
- Risk caused by unrepaired damage,
- Risk caused by insufficient maintenance or testing,
- Risk caused by using the wrong consumables.

Stability

Stability is guaranteed if your industrial truck is used according to its intended use.

The following actions may jeopardise stability:

- Driving with a raised load
- Cornering at excessive speeds
- Driving with a load that is protruding to the side (e.g. sideshift)
- Turning on and driving diagonally across descents or ascents
- Driving on descents or ascents with the load on the downhill side
- Loads that are too wide
- Driving with a swinging load
- Driving over ramp edges or steps

In the case of tip-over

If the industrial truck tips due to improper or incorrect operation:

- Do not release your seat belt
- Do not jump out
- Hold on tight
- Brace yourself with your feet
- Lean in the opposite direction to which the truck is tipping

▷

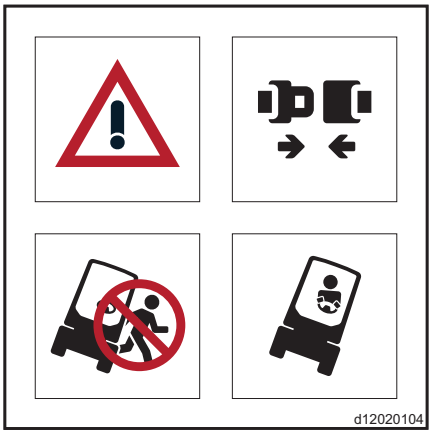

In the case of tip-over

d3921101

- Stay buckled up
- Don't jump
- Hold on tight
- Brace feet
- Lean away

The stability of your industrial truck is ensured if used properly and as intended. Should the industrial truck tip over during an unapproved application or due to incorrect operation, always follow the instructions depicted above.

Safety regulations when driving

Driving conduct

The driver must follow the public rules of the road when driving in company traffic.

The speed must be appropriate to the local conditions.

For example, the driver must drive slowly around corners, in tight passageways, when driving through swing-doors, at blind spots, or on uneven surfaces.

The driver must always maintain a safe braking distance from vehicles and persons in front, and must always have the truck under control. Stopping suddenly, turning quickly and overtaking at dangerous or blind spots must be avoided.

– Initial driving practice must be carried out in an empty space or on a clear roadway.

The following are forbidden during driving:

- Allowing arms and legs to hang outside the truck
- Leaning the body over the outer contour of the truck
- Climbing out of the truck
- Moving the driver's seat
- Adjusting the steering column
- Releasing the seat belt
- Disabling the restraint system
- Raising the load higher than 300 mm above the ground (with the exception of manoeuvring processes during the placement into stock/removal from stock of loads)
- Using electronic devices, for example radios, mobile phones etc.

⚠ WARNING

The use of multimedia and communication equipment as well as playing these devices at an excessive volume during travel or when handling loads can affect the operator's attention. There is a risk of accident!

– Do not use devices during travel or when handling loads.

– Set the volume so that warning signals can still be heard.

⚠ WARNING

In areas where use of mobile phones is prohibited, use of a mobile phone or radio telephone is not permitted.

– Switch off the devices.

Visibility when driving

The driver must look in the drive direction and have a sufficient view of the driving lane.

Particularly for reverse travel, the driver must be sure that the driving lane is clear.

When transporting goods that impair visibility, the driver must drive the truck in reverse.

If this is not possible, a second person acting as a guide must walk in front of the truck.

In this case the driver must only move at walking pace and with extra care. The truck must be stopped immediately if eye contact with the guide is lost.

Rear-view mirrors are only to be used for observing the road area behind the truck and not for reverse travel. If visual aids (mirror, monitor) are necessary to achieve sufficient visibility, it is necessary to practise using them. For reverse travel using visual aids, extra care should be taken.

When using attachments, special conditions apply; see the chapter entitled "Fitting attachments".

Any glass (variant, e.g. windscreen) and mirrors must always be clean and free of ice.

Safety regulations in case of accidental lateral tipping

If as a result of incorrect manoeuvring the truck appears to be tipping over sideways, carefully follow the instructions below:

a) Do not leave the forklift truck.

b) Tilt your head forward and move your body in the opposite direction to which the forklift is tipping.

c) Remain firmly seated, grip the steering wheel and dig your heels in. Wait until the truck has reached a stable position before leaving the truck.

Exercise caution when handling gas springs and accumulators

⚠ WARNING

Gas springs are under high pressure. Improper removal results in an elevated risk of injury.

For ease of operation, various functions on the truck can be supported by gas springs. Gas springs are complex components that are subject to high internal pressures (up to 300 bar). They may under no circumstances be opened unless instructed to do so, and may be installed only when not under pressure. If required, the authorised service centre will depressurise the gas spring in accordance with the regulations before removal. Gas springs must be depressurised before recycling.

– Avoid damage, lateral forces, buckling, temperatures over 80°C and heavy contamination.
– Damaged or defective gas springs must be changed immediately.
– Contact the authorised service centre.

⚠ WARNING

Accumulators are under high pressure. Improper installation of an accumulator results in an elevated risk of injury.

Before starting work on the accumulator it must be depressurised.

– Contact the authorised service centre.

Safety regulations for handling consumables

Permissible consumables

⚠ DANGER

Failure to observe the safety regulations relating to consumables may result in a risk of injury, death or damage to the environment.

– Observe the safety regulations when handling such materials.

The permissible materials required for operation can be found in the supply table in the chapter entitled "Maintenance".

Oils

DANGER

Oils are flammable!

- Follow the statutory regulations.
- Do not allow oils to come into contact with hot engine parts.
- No smoking, fires or naked flames!

DANGER

Oils are toxic!

- Avoid contact and consumption.
- If vapour or fumes are inhaled, move to fresh air immediately.
- In the event of contact with the eyes, rinse thoroughly (for at least 10 minutes) with water and then consult an eye specialist.
- If swallowed, do not induce vomiting. Seek immediate medical attention.

WARNING

Prolonged intensive contact with the skin can result in dryness and irritate the skin!

- Avoid contact and consumption.
- Wear protective gloves.
- After any contact, wash the skin with soap and water, and then apply a skin care product.
- Immediately change soaked clothing and shoes.

WARNING

There is a risk of slipping on spilled oil, particularly when combined with water!

- Spilt oil should be removed immediately with oil-binding agents and disposed of according to the regulations.

ENVIRONMENT NOTE

Oil is a water-polluting substance!

- *Always store oil in containers that comply with the applicable regulations.*
- *Avoid spilling oils.*
- *Spilt oil should be removed immediately with oil-binding agents and disposed of according to the regulations.*
- *Dispose of old oils according to the regulations.*

Hydraulic fluid

⚠ WARNING

These fluids are pressurised during operation of the truck and are hazardous to your health.

- Do not spill the fluids.
- Follow the statutory regulations.
- Do not allow the fluids to come into contact with hot engine parts.

⚠ WARNING

These fluids are pressurised during operation of the truck and are hazardous to your health.

- Do not allow the fluids to come into contact with the skin.
- Avoid inhaling spray.
- Penetration of pressurised fluids into the skin is particularly dangerous if these fluids escape at high pressure due to leaks in the hydraulic system. In case of such injury, immediate medical assistance is required.
- To avoid injury, use appropriate personal protective equipment (e.g. protective gloves, industrial goggles, skin protection and skin care products).

ENVIRONMENT NOTE

Hydraulic fluid is a water-polluting substance.

- *Always store hydraulic fluid in containers that comply with regulations*
- *Avoid spills*
- *Spilt hydraulic fluid should be removed immediately with oil-binding agents and disposed of according to the regulations*
- *Dispose of old hydraulic fluid according to the regulations*

Battery acid

⚠ WARNING

Battery acid contains dissolved sulphuric acid. This is toxic.

- Avoid touching or swallowing the battery acid at all costs.
- In case of injury, seek medical advice immediately.

⚠ WARNING

Battery acid contains dissolved sulphuric acid. This is corrosive.

- When working with battery acid, use appropriate PSA (rubber gloves, apron, protection goggles).
- When working with battery acid, never wear a watch or jewellery.
- Do not allow any acid to get onto clothing or skin or into the eyes. If this does happen, rinse immediately with plenty of clean water.
- In case of injury, seek medical advice immediately.
- Immediately rinse away spilt battery acid with plenty of water.
- Follow the statutory regulations.

ENVIRONMENT NOTE

– Dispose of used battery acid in line with the applicable regulations.

Disposal of consumables

ENVIRONMENT NOTE

Materials that accumulate during repair, maintenance and cleaning must be collected properly and disposed of in accordance with the national regulations for the country in which the truck is being used. Work must only be carried out in areas designated for the purpose. Care must be taken to minimise any environmental pollution.

– Soak up any spilt fluids such as hydraulic oil, brake fluid or gearbox oil using an oil-binding agent.

– Neutralise any spilt battery acid immediately.

– Always observe national regulations concerning the disposal of used oil.

Environmental considerations

Handling consumables

ENVIRONMENT NOTE

Consumables must be handled properly and in accordance with the manufacturer's instructions.

- Consumables must be stored only in containers that comply with the applicable regulations and at the locations stipulated
- Do not allow flammable consumables to come into contact with hot objects or naked flames
- When topping up consumables, use only clean containers
- Observe the manufacturer's instructions relating to safety and disposal
- Avoid spillages
- Clean up spilled liquids immediately using suitable binders; dispose of these in accordance with regulations
- Old and contaminated consumables must be disposed of in accordance with the applicable regulations
- Comply with the statutory provisions
- Before performing lubrication work, filter changes or any work on the hydraulic system, carefully clean the area around the relevant part
- Dispose of used spare parts in an environmentally responsible manner

WARNING

Pressurised hydraulic fluid penetrating the skin, e.g. due to leakage, is dangerous. If an injury of this type occurs, consult a doctor.

– Wear protective equipment.

WARNING

The improper handling of coolant and coolant additives presents a risk to health and the environment.

– Observe the manufacturer's instructions.

Disposing of components and batteries

The truck is composed of different materials. If components or batteries need to be replaced and disposed of, the national regulations must be observed with regard to:

- Disposal
- Handling
- Recycling

NOTE

The documentation provided by the battery manufacturer must be observed when disposing of batteries.

ENVIRONMENT NOTE

We recommend working with a waste management company for disposal requirements.

Packaging

During delivery of the truck, certain parts are packaged to provide protection during transport. This packaging must be removed completely prior to initial start-up.

ENVIRONMENT NOTE

The packaging material must be disposed of properly after delivery of the truck.

Emissions

The values specified apply to a standard truck (compare the specifications in the "Technical data" chapter). Different tyres, lift masts, additional units etc. may produce different values.

Noise emissions

The values were determined based on measuring procedures from the standard EN 12053 "Safety of industrial trucks.

This machine emits the following sound pressure level:

Continuous sound pressure level in the driver's compartment

Model	Continuous sound pressure level in the driver's compartment	
	LpAZ	Measurement uncertainty KpA
RCD50	85.2 dB(A)	4 dB(A)

The values were determined in the test cycle on an identical machine from the weighted values for operating statuses and idling.

However, the indicated noise levels at the truck cannot be used to determine the noise emissions at workplaces according to the most recent version of Directive 2003/10/EC (daily personal noise pollution). If required, these noise emissions must be determined directly at the workplaces under the actual conditions present (further sources of noise, particular application conditions, sound reflections) by the operating company.

NOTE

Please note the definition of "operating company" in the sense of responsible persons!

Vibrations

The vibrations of the machine have been determined on an identical machine in accordance with the standards DIN EN 13059 "Safety of industrial trucks - Test methods for measuring vibration" and DIN EN 12096 "Mechanical vibration - Declaration and verification of vibration emission values".

Frequency-weighted effective value of acceleration on the seat

The following value is valid for all truck models:

Model	Weighted effective value of acceleration to which the body (feet or seat surface) is subjected	Measurement uncertainty
RCD50	Seat <1.554 m/s2	0.3 m/s2

Tests have indicated that the amplitude of the hand and arm vibrations on the steering wheel or the operating devices in trucks is less

than 2.5 m/s2. There are therefore no measurement guidelines for these measurements.

The personal vibration load on the driver over a working day must be determined by the operating company at the actual place of use in accordance with Directive 2002/44/EC, in order to consider all additional influences, such as driving route, intensity of use etc. are considered.

NOTE

Please note the definition of "operating company" in the sense of responsible persons!

Fitting attachments

Only competent persons are permitted to fit the attachment and connect the energy supply for power-driven attachments.

Mechanical connection

For **hooked on** attachments, the attachment and fork carriage must be of the same class.

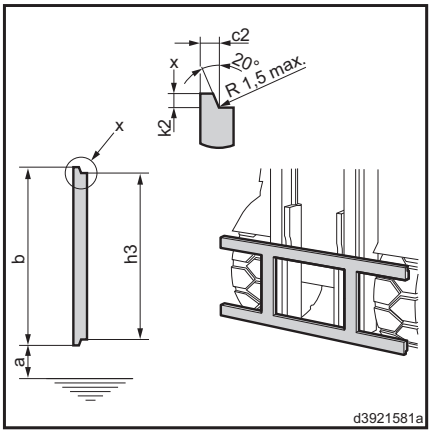

Class As per ISO 2328	Load capacity Truck kg	Load centre of gravity mm	Version	a mm	b mm	c2 mm	k2 mm	h3 mm
1	0 - 999	400 and 600	A	76	331	16	13	305
			B	114				
2	1000 - 2500	500 and 600	A	76	407	16	13	381
			B	152				
3	2501 - 4999	500 and 600	A	76	508	21.5	16	476
			B	203				
4	5000 - 8000	600	A	127	635	25.5	19	597
			B	254				

Class As per ISO 2328	Load capacity Truck kg	Load centre of gravity mm	Version	a mm	b mm	c2 mm	k2 mm	h3 mm
5	8001 - 10999	600	A	127	728	34	25	678
			B	257				

Integrated attachments are made to match the installed lift mast. When retrofitting attachments, the correct attachment and all of the necessary parts from the industrial truck manufacturer—especially lift mast rollers and chain supports—must be available.

Contact your service partner.

Hydraulic connection

⚠ WARNING

The hydraulic system is pressurised. Risk of injury.

Wear protective equipment.

⚠ CAUTION

Risk of damage to the hydraulic system through contamination.

When connecting hydraulic lines, ensure that they are clean.

Before connecting hydraulic lines or hydraulic couplings, the hydraulic system must be depressurised.

Without depressurisation:

– Place a collection container underneath the system.

– Carefully release the connection for the hydraulic lines.

As the pressure decreases, hydraulic oil escapes.

– Disconnect the hydraulic lines.

– Connect the hydraulic lines to the attachment.

With depressurisation: (special equipment)

– Depressurise the hydraulic lines as described in the section entitled "Depressurisation".

– Disconnect the hydraulic lines.

– Connect the hydraulic lines to the attachment.

Additional capacity rating plate

Attachments alter the load capacity and stability of the truck. For each attachment, an additional capacity rating plate must be mounted in the driver's field of vision to indicate the load capacity of the truck with the attachment; refer to the section entitled "Additional capacity rating plate for attachments".

Manually lowering the fork arms with ISO

The control valve is equipped with an emergency lowering screw (1) for manual lowering of the fork carriage. This may be required if a malfunction occurs in the hydraulic system. The control valve is located under the control lever on the right-hand side of the truck and is equipped with an emergency lowering screw.

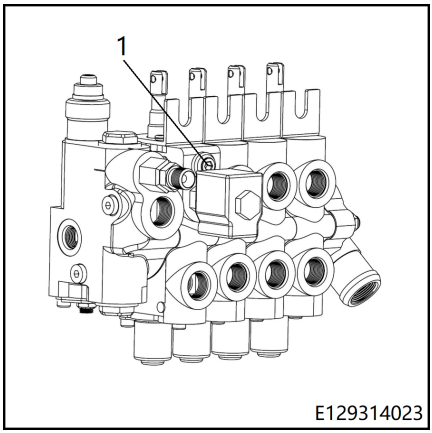

⚠ DANGER

Do not stand in the vicinity of the forks when the fork arms are being lowered.

During lowering, leave the socket wrench on the screw on the valve block to enable lowering to be stopped at any time.

– Remove the foot plate and the joystick base cover.

– Slowly turn the emergency lowering screw about 1.5 turns anticlockwise using a hexagon socket wrench.

– Gently push the joystick until the forks are completely lowered.

– After it is lowered, turn back the emergency lowering screw clockwise with $2.5^{0.5}$Nm tightening torque. Otherwise, you cannot use the joystick to operate the fork carriage.

– Refit the foot plate and the joystick base cover.

Emergency exit from driver's cab with windows

⚠ CAUTION

If the truck is equipped with a driver's cab with doors, DO NOT open the doors until the load is placed on the floor.

NOTE

If the truck has a driver's cab with a door, a window and glass, it is difficult for the driver to open the door from the side when the truck encounters a fault in narrow passages. In the event of such dire danger, the driver can exit the truck via the rear window.

– Unlock the rear window of the driver's cab. ▷

– Push the window outwards until it opens.

– Climb out carefully.

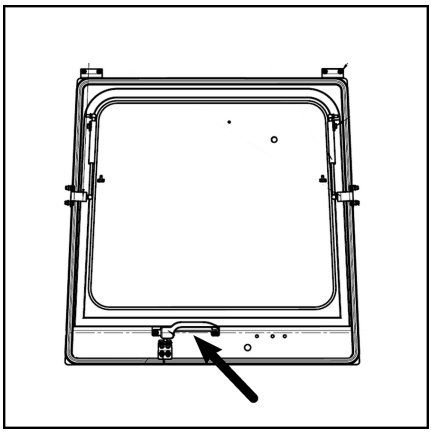

3

Overview

General view

General front view

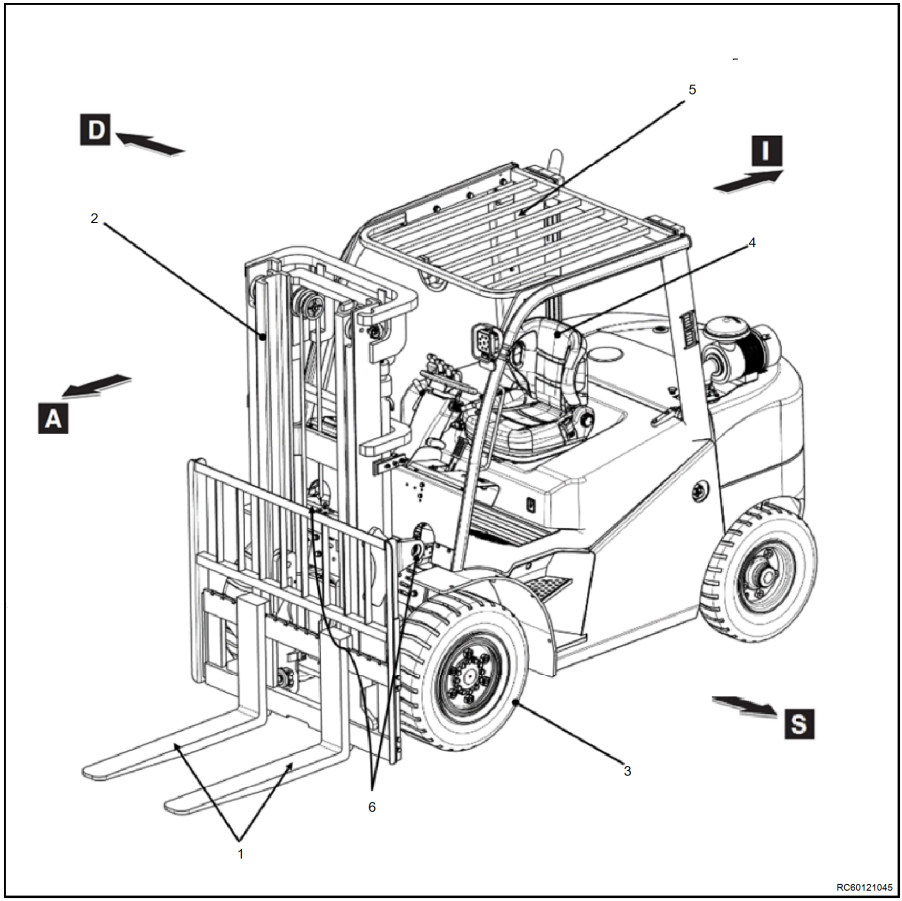

1-	Fork arms	6-	Tilt cylinder
2-	Mast	A-	Forward
3-	Front wheels	D-	Right
4-	Driver's Seat	I-	Backwards
5-	Overhead guard	S-	Left

General rear view

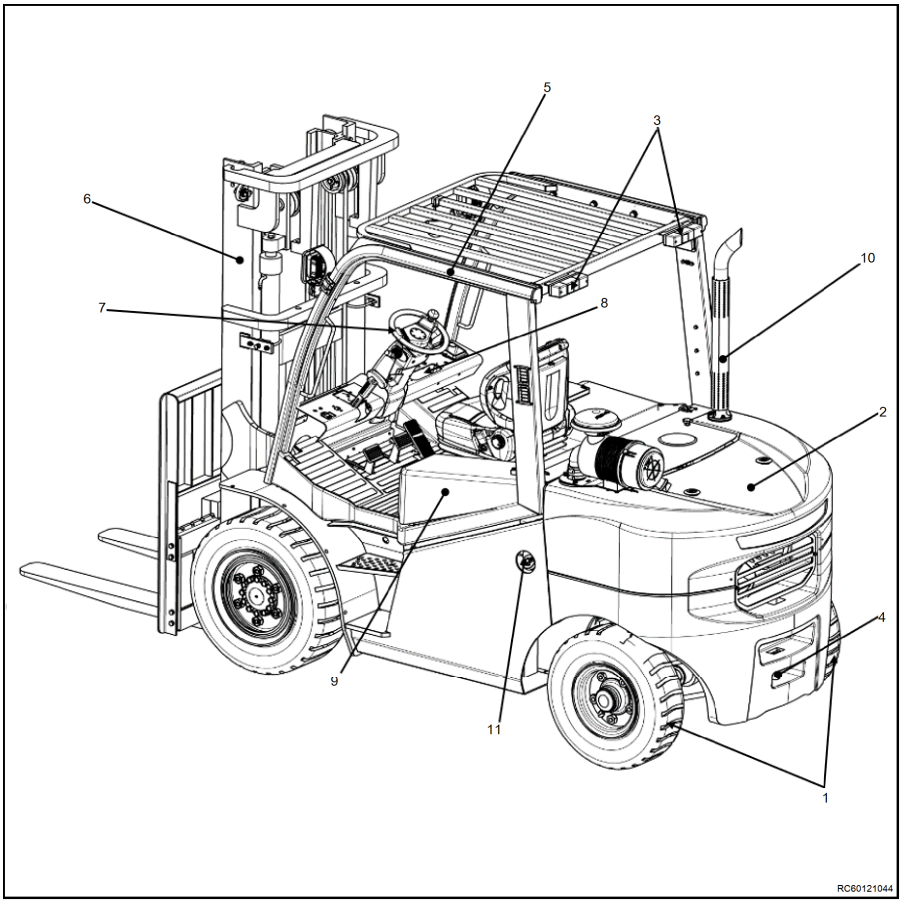

1- Rear wheels
2- Rear weight
3- Rear lights
4- Trailer coupling
5- Overhead guard
6- Mast
7- Steering wheel
8- Control panel
9- Engine bonnet
10- Exhaust pipe
11- Filler cap for fuel tank

Instrumentation and controls

Overview of the driver's compartment

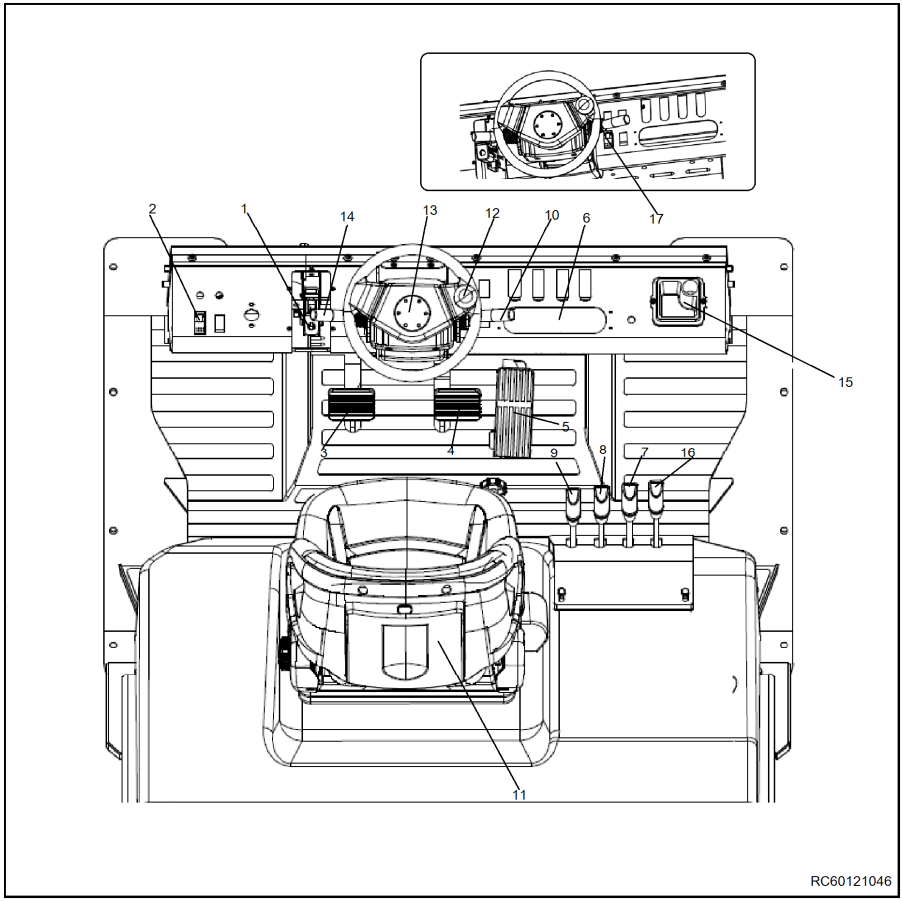

1	Parking brake	9	Lifting and lowering operating handle
2	Speed switch	10	Lighting and direction indicator switch
3	Inching pedal	11	Driver's seat
4	Brake pedal	12	Steering wheel
5	Accelerator pedal	13	Horn button
6	Display unit/Control panel	14	Direction selection lever
7	Side shifter operation lever	15	Cup holder
8	Forward tilting and back tilting operating handle	16	Fixtures operating lever
		17	DPF reprocessing switch

Display unit

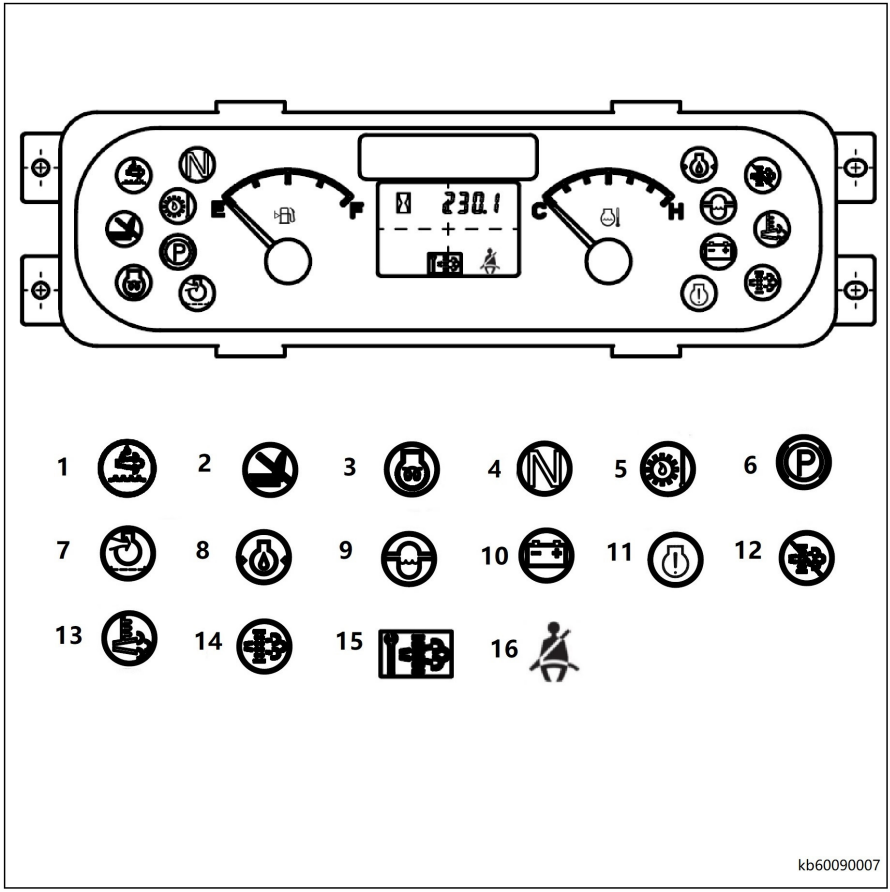

1 “SCR error” indicator light
2 Seat indicator light
3 Indicator light for "glow plug preheating"
4 Neutral Position indicator
5 “Torque Converter Oil Temperature” indicator light
6 “Parking brake” indicator light
7 “Clogged air filter” indicator light
8 “Engine oil pressure” indicator light
9 “Water separator light” indicator light
10 “Battery charging” indicator light
11 "Engine error light" indicator light(Red light)
12 “DPF regeneration disabled” indicator light(Red light)
13 DPF regeneration indicator light/Exhaust temperature warning light(Yellow light)
14 “DPF regeneration request” indicator light(Yellow light)
15 “Ash condition”indicator
16 “Seat belt” indicator

Truck identification

Chassis number

The truck serial number is stamped on the lower crossmember of the chassis at the driver's step plate

Serial number

The serial number is used to identify the truck. The serial number is shown on the nameplate. Quote the serial number for all technical questions.

The serial number contains the following coded information:

1 Production location
2 Model
3 Year of manufacture
4 Sequential number

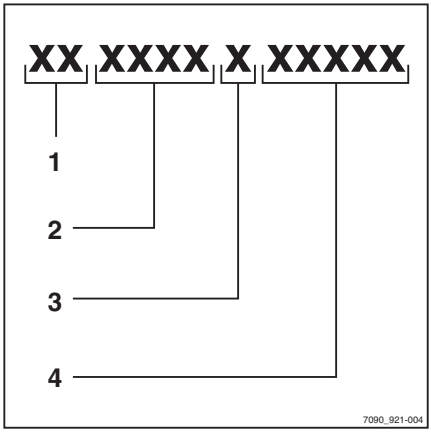

Nameplate

Variant 1: Industrial trucks built up to 12/2021

1 Model
2 Production number
3 Year of manufacture
4 Tare weight in kg
5 Max. permissible battery weight in kg (for electric forklift trucks only)
6 Min. permissible battery weight in kg (for electric forklift trucks only)
7 Ballast weight (only for electric trucks)
8 For more detailed information, refer to the technical data in the operating instructions
9 CE labelling
10 Rated drive power in kW
11 Battery voltage in V
12 Rated capacity in kg

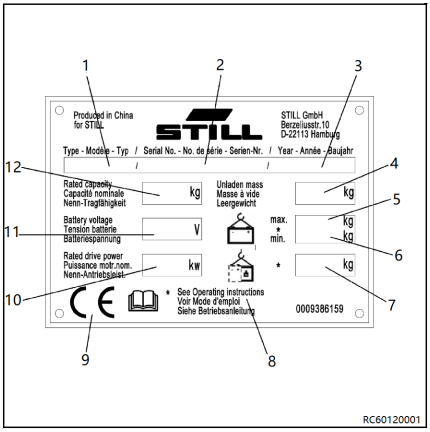

Variant 2: Industrial trucks built after 12/2021

▷

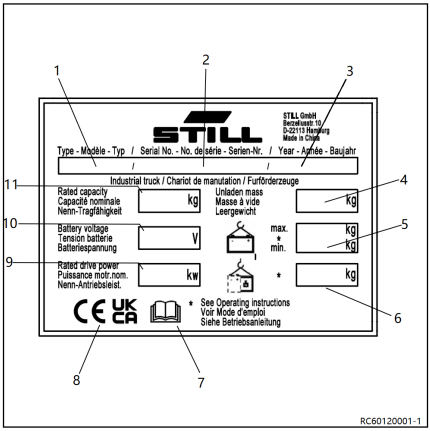

1 Model
2 Production number
3 Year of manufacture
4 Tare weight
5 Max. battery weight/ Min. battery weight (only for electric trucks)
6 Ballast weight (only for electric trucks)
7 For more detailed information, refer to the technical data in the operating instructions
8 Conformity marking: CE mark for the markets of the EU, the EU candidate countries, the EFTA States and Switzerland; UKCA mark for the United Kingdom market; EAC mark for the Eurasian Economic Union market
9 Rated drive power
10 Battery voltage
11 Rated capacity

NOTE

- *It is possible for there to be multiple conformity markings on the nameplate.*
- *The EAC mark may also be located in the immediate vicinity of the nameplate.*

UK-Importer

▷

Importer: STILL Materials Handling UK Ltd.
Jacks Way, Hill Barton Business Park, Clyst St Mary,
Exeter EX5 1FG

NOTE

This label is only for UK.

Engine plate

The engine plate(1) is fixed to the cylinder head cover or the crankcase.

The type(2),engine no.(3) and performance data are attached to the engine plate.

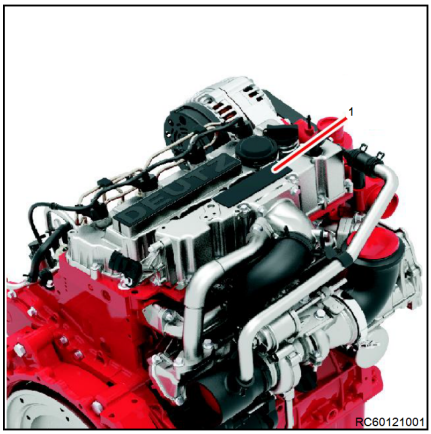

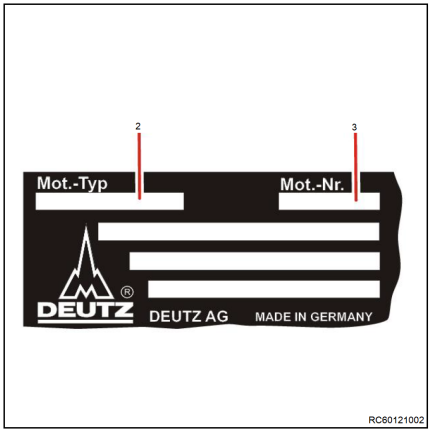

Location of the decals

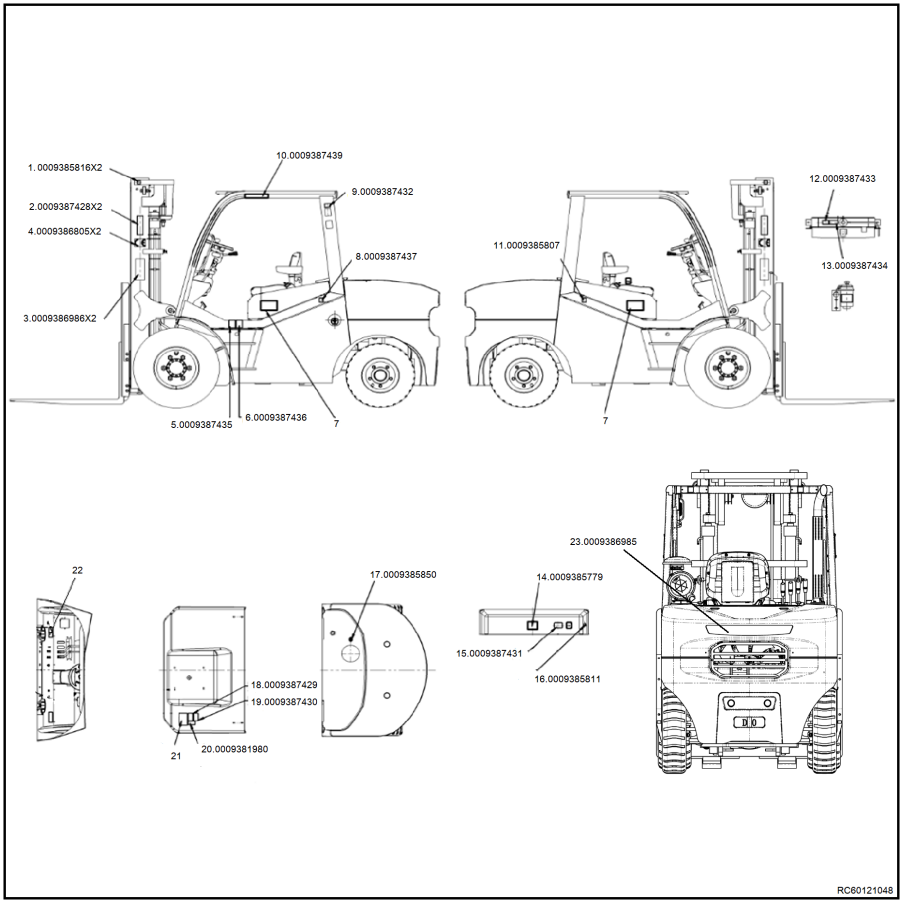

Location of the decals

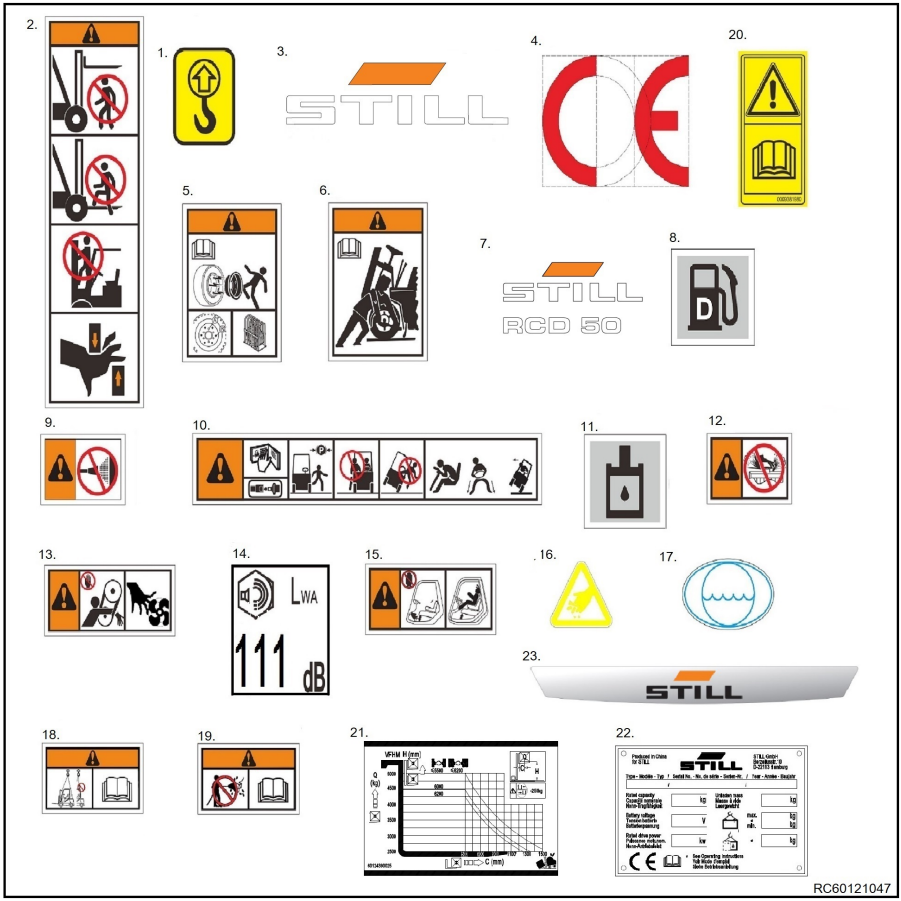

1 Decal information: Lifting gear attachment point
2 Warning sign: Do not stand underneath the fork/Do not stand on the fork/Do not enter space behind the mast/ Injury to hand
3 Manufacturer's name
4 CE label
5 Decal information: Caution / Dismantle the wheel according to the instruction
6 Decal information: Caution / Fasten the wheel
7 Model information
8 Decal information: Filling in diesel
9 Decal information: Caution / Danger due to shearing
10 Decal information: Caution/Read the operating instructions/Fasten the seat belt/Apply the parking brake when leaving the truck/ Passengers are not allowed/Do not jump off if the truck is tipping over/Brace feet/Hold on tight/Lean in the opposite direction to which the truck is tipping
11 Decal information: Hydraulic oil tank
12 Warning sign: Danger due to overheating of radiator
13 Warning sign: Danger due to shearing
14 Decal information: Acoustic power level
15 Warning sign: Danger due to shearing / Danger to the driver's head with engine hood not fully closed.
16 Warning sign: Danger due to shearing
17 Decal information: Adding coolant
18 Warning sign: Always lifting by lifting gear attachment point
19 Warning sign: Preventing water into the electrical parts
20 Decal information: Caution / Read the operating instruction

21 Decal information: Capacity rating plate
22 Nameplate
23 Manufacturer's name

4

Use and operation

Truck transport and lifting

Removing the mast

⚠ CAUTION

Mast removal and installation must be carried out by trained personnel.

Contact your authorised dealer.

Use a truck or flatbed trailer to carry the forklift truck

The truck is normally transported by road and rail complete with lift mast. If the truck's dimensions exceed the max. clearance size allowed, it is transported with mast disassembled.

The forklift must be secured to the transport means during transport using appropriate restraint systems .

– Lower the lift mast completely.

– Tilt the lift mast forward.

NOTE

The fork arms must be resting on the ground.

– Apply the parking brake as described in chapter entitled"Parking brake".

– Use two wedges to block each of the front and rear wheels to prevent rolling.

– Fasten the forklift truck to the truck using ropes attached to the towing device and to the left and right outer profiles of the forklift truck's lift mast.

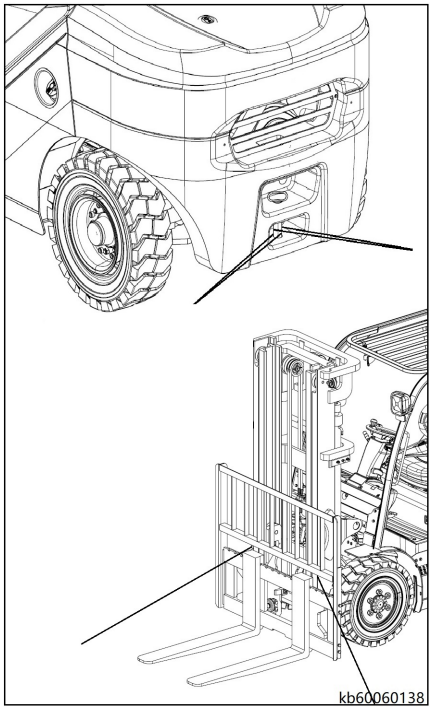

⚠ CAUTION

Damage may occur to the mast components.

Stay clear of the ropes used for fastening, and do not tighten around hose lines, lift cylinders and mast chains.

NOTE

If the mast is removed from the forklift truck, fasten the forklift truck to the truck by tying ropes to the towing device and to the left and right sides of the overhead guard.

⚠ DANGER

A slipping rope may cause the forklift truck to slide!

The forklift truck must be securely tied down to prevent it from moving during transportation.

Make sure that the securing ropes are tight.

⚠ CAUTION

Also use ropes to secure the mast in the case that the mast shall be disassembled during the transport.

Environmental conditions for transport and storage

The forklift truck must be protected from the effects of the weather during transport and storage. In salty environments, appropriate protection must be provided.

Lifting the truck with a crane

⚠ DANGER

When lifting the truck with a crane, there is a risk of accident and fatal injury if personnel are in the working area of the crane.

When using a crane to lift the truck, pay particular attention to ensure that no personnel are in the vicinity of the crane. Comply with the load capacity rating marked on the crane nameplate. Never walk under a suspended load!

⚠ CAUTION

Use a spreader and crane with sufficient load capacity to lift the truck. For the weight of the truck, see the manufacturer's nameplate.

NOTE

Before lifting the truck, fasten the slings to the given lifting points. These lifting points are not specifically marked on the truck.

- Lower the lift mast completely, and tilt it fully backwards.
- Remove the rubber grommets from the openings in the counterweight.
- Remove the counterweight grid.
- Attach a sling (2) (able to at least bear the weight of the forklift truck) to the openings in the counterweight.
- Attach two shackles (5) to the two openings in the upper beam of the outer lift mast.
- Attach a sling (3) (able to at least bear the weight of the forklift truck) to the two shackles.
- Prevent the slings from rubbing against any sharp edges on the truck.
- Attach the ends of all the slings to the crane hook (1).

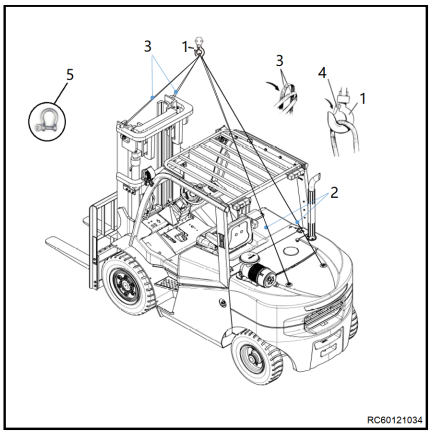

⚠ CAUTION

After hanging the slings from the lifting hook, the safety lock (4) must be fastened. The slings must not touch the overhead guard or any other installed equipment when the truck is being lifted.

⚠ DANGER

The overhead guard will be damaged if it is contacted by lifting equipment that is under tension from lifting. This can result in later failure of the overhead guard and the risk of severe injury or death. Ensure that no part of any lifting equipment contacts the overhead guard during lifting.

Commissioning the truck

⚠ CAUTION

Do not use the forklift truck before it has been commissioned by a service engineer authorized by the manufacturer.

⚠ CAUTION

The forklift truck may be commissioned only by a service engineer authorized by the manufacturer.

Remaining ready for operation

Pre-shift checks

Carrying out the following checks as part of your daily routine will help to keep the forklift truck in good condition. These checks are supplemental and do not replace periodic maintenance work.

NOTE

If, when carrying out the daily checks, you discover a defect or you are unsure whether the truck will function properly, do not use the truck and contact the technical service department.

Daily checks before use

The following checks must be performed on a daily basis in order to keep your truck in good condition and to operate safely. These checks supplement and do not replace the scheduled maintenance operations.

- Check the correct position and fastening, intactness and operation of the various safety components installed on the truck.
- Make sure that "seat switch" is working correctly.
- Check that the brakes work correctly, checking their travel and efficiency.
- Check the tyre pressure and wear conditions.
- Visually inspect wheels for correct tightness.
- Make sure that the lights work correctly (if applicable).
- Visually check that the chains are taut.
- Make sure that the start/stop key works correctly.
- Check that the fork arms are in good condition;
- Check that the fork arm control levers work correctly
- Check the fuel filter water trap
- Check engine coolant level.
- Check brake oil level.
- Check transmission oil level.
- Check axle oil level.
- Engine oil level checking procedure
- Check the area under the forklift truck for leaking consumable.
- Check the validity of the fire extinguisher daily. If it approaches the expiring date replace it in time. Make sue the new extinguisher size is same as the original fire extinguisher, and install it on the fire extinguisher bracket(for the truck with fire extinguisher option)
- Check the structure of the overhead guard for no damage and transparent material forms the part of the overhead guard structure shall not exceed 20 mm vertical deformation. Otherwise it shall be replaced accordingly.

⚠ CAUTION

DO NOT use the truck, but call the technical service department, if you notice any malfunctions or if you have any doubts about its correct operation.

Seat belt status and performance checks

DANGER

For safety reasons, the condition and protective ability of the seat belt must be checked on a daily basis.

Do not operate the vehicle with the seat belt removed.

– Check the condition of the belt: pull the seat belt(1) all the way out of the retractor(2) and check the seat belt for damage. ▷

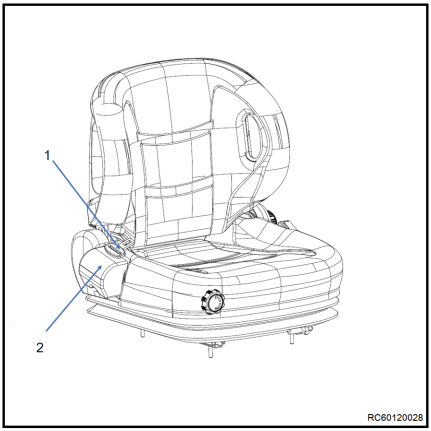

CAUTION

The seat belt must be replaced if it is cracked, worn or has been damaged in an accident.

– Carefully check the connection between the seat belt and the seat.

– Carefully check the connection between the seat and the panel cover below.

NOTE

Only when the driver sits on the seat, the forklift can be operated.

– Push the lever (1)on the front left-hand side of the engine bonnet upwards with your left hand. ▷

– Open the bonnet and raise it around 30°.

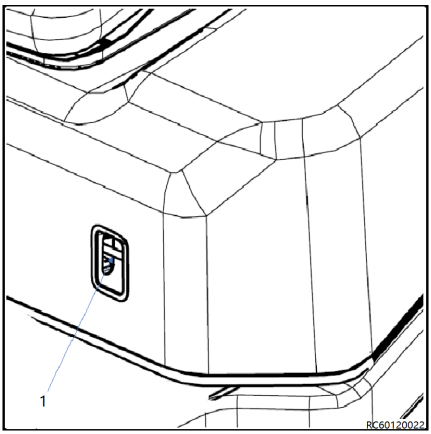

NOTE

The bonnet is held up by the gas spring.

– Try to pull the belt. The automatic blocking mechanism must not allow the belt (1) to come out of the retractor (2).

⚠ CAUTION

A warning sound will be activated when the operator leaves the seat without parking brake applied. The signal will sound even if the truck has been switched off and the key removed.

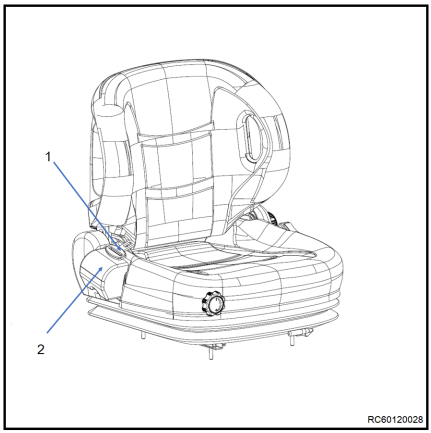

Checking the condition of the tyres

Superelastic tyres

Superelastic tyres must be changed before the profile reaches the maximum wear allowed. The maximum wear of the tyre manufacturer is indicated by a line on the side (1) along the circumference of the tyre.

⚠ DANGER

If the forklift truck is used on wet or slippery surfaces, replace the tyres before the thickness of the tread drops below 1 mm.

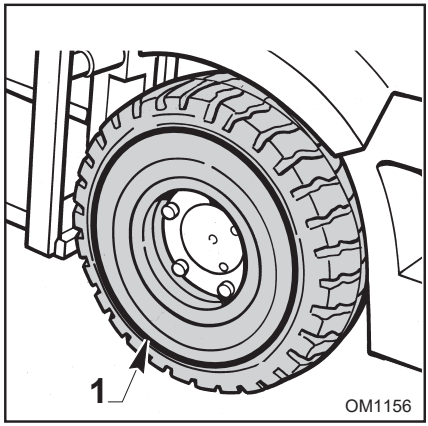

Check the wheel nuts for correct condition

– Visually check the markings in the wheel nuts and rims are correctly attached, re-tighten with torque spanner if necessary.

Tightening torque:

Front tyres (M20X1.5) : 525 N.m±10%

Rear tyres (M20X1.5) : 525 N.m±10%

– Visually check if the column is deformed or whether the hole for the rim is larger, re-tighten with torque spanner if yes. Replace the rim when there is serious deformation.

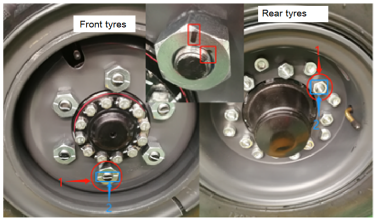

RC60060067

– If the markings are difficult to recognize, check if there is any gap (As the arrows show) between the joint face of the rims and nuts. Re-tighten with torque spanner if gap exits.

– Check the wheels and rims for wear and deformation, change the tyres if there is any deformation.

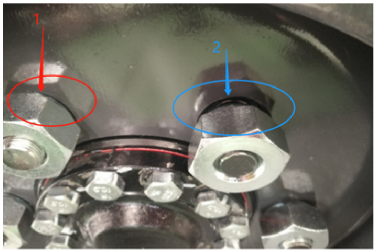

RC60060068

Check the condition and operation of chain

– Check load chains for any distortion before operation. ▷

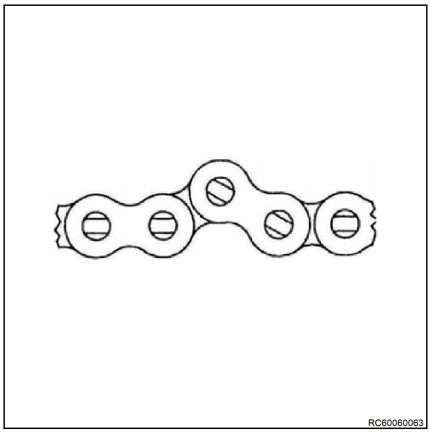

– Stop using the forklift immediately when the hinge pins of chain rotate before operation. ▷

– Lift and lower the lifting mast without load for one round to check the operation of lifting chain for any abnormal sound or block.

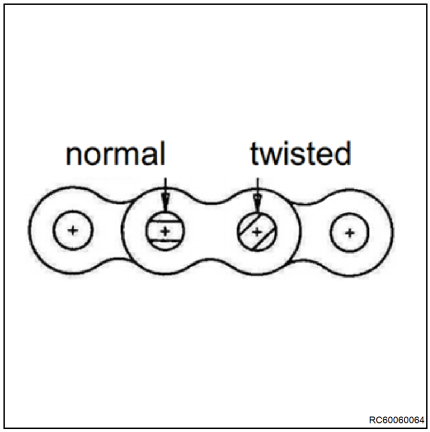

– Contact your authorised dealer if chains are suffering abnormal force. ▷

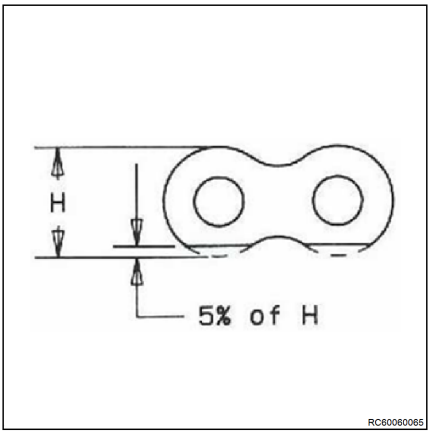

– Keep the chains clean, ensure no excessive dust exits; Immediately lubricate the chains with specified chain spay if chain surfaces are dry. ▷

⚠ CAUTION

For safety reasons, wear safety equipment while working at height.

NOTE

If the truck is used in the food industry, please use lubricating grease in place of spray.

– During operation or maintenance, stop using the forklift if there is any crack of chain plate.

Checking the coolant level

⚠ DANGER

Risk of burns. When the engine is hot, the radiator is under pressure and hot coolant can spray out if the radiator cap is unscrewed.

– Check coolant level when the engine is cold and switched off.

⚠ CAUTION

Risk of engine damage! If there is cooling fluid missing, this indicates leakages in the cooling system.

Check the cooling system for leaks, such as from leaking hose clips.

– Remove the radiator water tank cover by loosening two screws(1). ▷

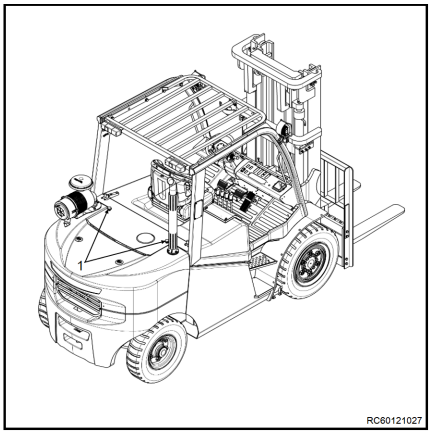

– Carefully unscrew the radiator cap (2). ▷

– Check whether the radiator is filled to the top with coolant.

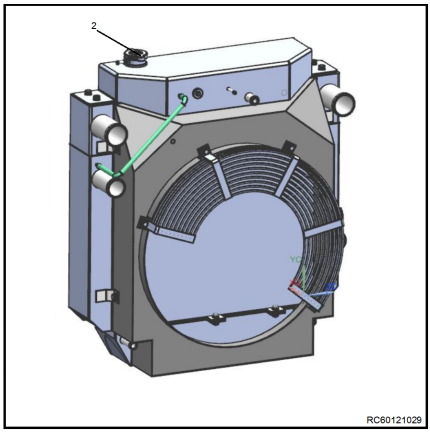

NOTE

To perform this check, the truck must be parked on a level surface.

– If necessary, add coolant in line with the specifications given in the chapter entitled "Supply table".

The radiator is assembled with coolant level sensor. The corresponding light in the display will illuminate while the coolant is too low, fill in the radiator with specified coolant accordingly.

– Screw the radiator cap back on securely.

Checking the engine oil level

– Stop the truck and ensure it is parked on a level surface.

– Open the bonnet.

– Take out the dipstick (1) and wipe with a clean cloth.

– Fully reinsert the dipstick.

– Remove the dipstick. The oil level should be between the upper (2) and lower (3) markings on the dipstick.

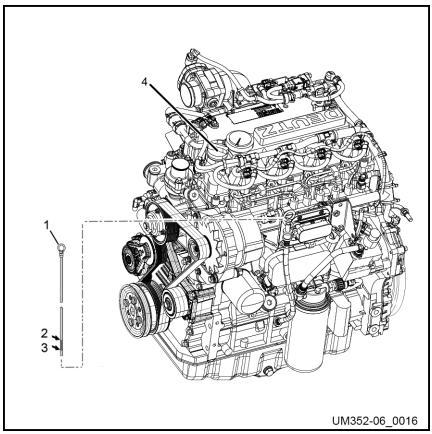

NOTE

If necessary, open the oil filler cap (4) and add oil.

– Fully reinsert the dipstick.

Transmission oil level inspection procedure

NOTE

Check the transmission level with the transmission in neutral, the oil hot (at least 40°C) and with the truck on level ground.

- Ensure the forklift truck is stopped on a level surface.
- Remove the bottom plate.
- Run the truck in neutral for 3-5 minutes.
- Take out the dipstick(1)and wipe with a clean cloth. ▷
- Fully reinsert the dipstick.
- Take out the dipstick. The oil level should be between the upper and lower marks on the dipstick scale. If necessary, add transmission oil via the oil inlet.
- Fully reinsert the dipstick.

DANGER

Take care not to touch moving parts during this operation.

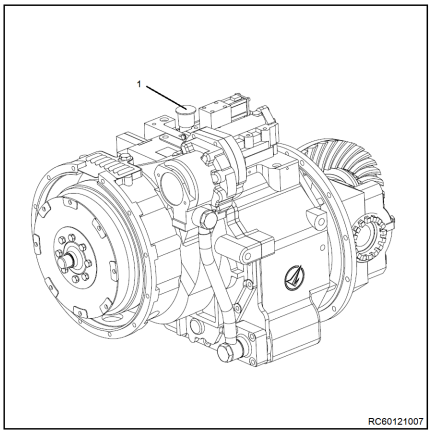

Checking the drive axle gearbox oil ▷

- Unscrew the oil plug at the oil level aperture(1).
- Check the gear shaft oil level to ensure it is near the observation aperture position(around 15mm).
- If necessary, fill the gearbox with gear oil until oil flows out of the oil level aperture.

NOTE

Please refer to the chapter on replacing the drive axle gearbox oil for steps to take when adding gear oil.

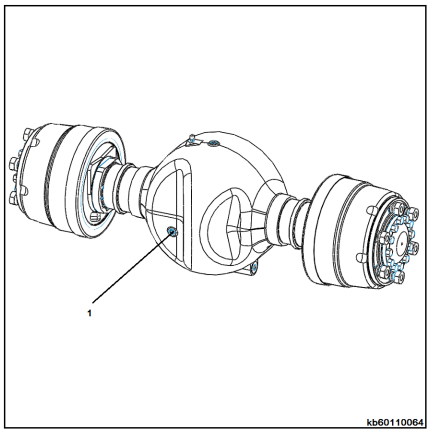

Checking the hydraulic oil level

ENVIRONMENT NOTE

Please follow the instructions for handling/disposal of fluids and lubricants.

NOTE

The oil level should only be checked with the lift mast vertical and the fork carriage lowered.

– Apply the parking brake.

– Open the engine cover.

– Screw the oil cap with dipstick(1). ▷

– Use a clean cloth to dry the dipstick.

– The oil level should be between the upper and lower markings on the dipstick.

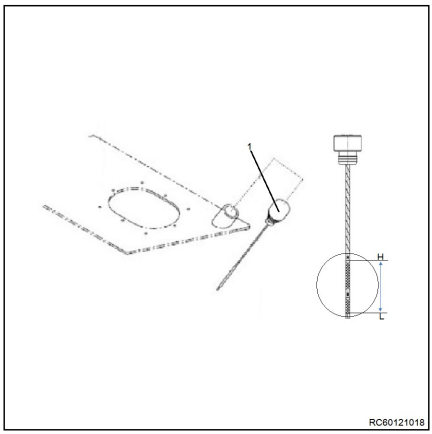

WARNING

The hydraulic oil must be checked while the engine is stopped and the forklift is in horizontal level,

– When required, fill the hydraulic oil up to the upper marking.

– Re-fit the oil dipstick.

– Safely close the engine cover.

Refuelling

⚠ DANGER

Turn off the engine before refuelling. Do not smoke or use naked flames while refuelling.

– Remove the fuel tank cap (1) and refuel.

– Close the fuel tank cap (1).

⚠ CAUTION

Risk of damage to injection system due to entering air.

Do not allow the tank to empty entirely if possible so that no air can enter the injection system.

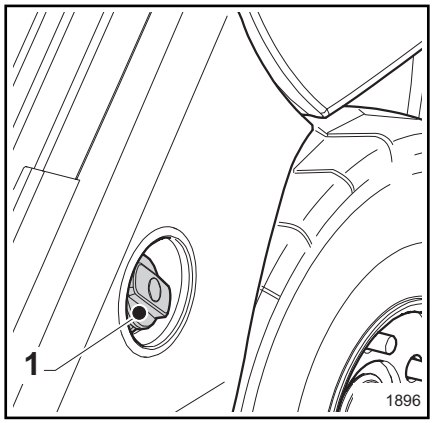

Diesel fuel - Specifications

In order to satisfy the exhaust gas legislation, diesel engines that are equipped with an exhaust after-treatment system may only be operated with a sulphur-free diesel fuel.

The operational reliability and durability of the individual exhaust after-treatment technologies cannot be assured upon failure to comply.

The following fuel specifications are approved:

Diesel fuels

- EN 590 (B7) `sul phur <10 mg/kg`
- ASTM D 975 Grade 1-D S15 `sul phur <15 mg/kg`
- ASTM D 975 grade 2-D S15 `sul phur <15 mg/kg`

Bio-diesel fuel mixtures

- EN 16734 (B10)
- EN 16709 (B20 / B30)
- ASTM D 7467

Synthetic and paraffinic fuels

- EN 15940

Light heating oils

- In EN 590 quality `sul phur <10 mg/kg`

NOTE

Use of products with specifications lower than those shown in the table could cause damage to the truck not covered by the warranty.

The certification measurements for compliance with the legal emission limit values are carried out with the test fuels specified in the laws. These correspond to the diesel fuels described in this operating manual according to EN 590 and ASTM D 975. With the other fuels described in this operating manual, no emission values are guaranteed.

⚠ CAUTION

The respective fuels prescribed by law must be used to comply with the national emission regulations (e.g. sulphur content).

Please contact your authorised dealer.

Winter operation with diesel fuel

Special demands are placed on the cold behaviour (temperature limit value of the filtrability) for winter operation. Suitable fuels are available at fuel stations in winter.

At low ambient temperatures paraffin discharges can lead to blockages in the fuel

system and cause operating faults. Winter diesel fuel must be used at ambient temperatures below 0 °C (up to -20 °C) (this is offered at fuel stations in good time before the start of winter).

NOTE

Special diesel fuels can be used for arctic climates up to -44 C.

Mounting/dismounting

▷

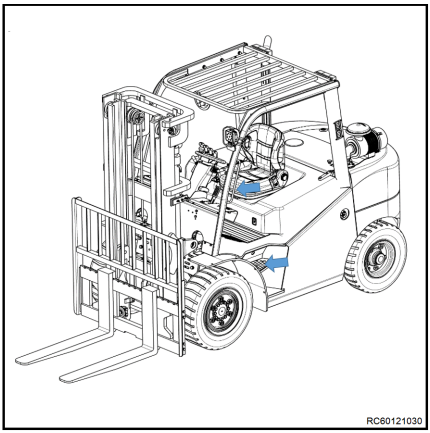

⚠ CAUTION

Always face the vehicle when dismounting the forklift, in order to prevent injury to the legs and back.

NOTE

Do not grip the steering wheel or joysticks when mounting/dismounting the forklift.

– First place your left foot on the step. Grip the handrail or overhead guard beam and mount the truck from the left-hand side.

– Use the step and handrail or overhead guard beam to dismount from the left-hand side.

⚠ CAUTION

Do not mount or dismount the truck from the right hand side unless it is an emergency.

Sealt and seat belt

Seat belt and performance checks

⚠ DANGER

For safety reasons, the condition and protective ability of the seat belt must be checked on a daily basis.

Do not operate the vehicle with the seat belt removed.

⚠ CAUTION

Carefully check that the retractor locking device, the seat belt locking device and the connections between the seat belt/seat and the seat/cover panel are all in good condition.

– Check the state of the seat belt by pulling it all the way out of the retractor and checking for damage.

⚠ CAUTION

The seat belt must be replaced if it is cracked, worn or has been damaged in an accident. When replacing a seat belt, the entire protection system must also be replaced, including the seat belt, latchplate, retractor and locking mechanisms.

– Check the latch locking mechanism: insert the latchplate of the seat belt into the latch until you hear a click. Make sure that locking mechanisms such as latchplates and latches are working properly.
– Carefully check the connection between the seat belt and the seat.
– Carefully check the connection between the seat and the panel cover below.

Adjusting the seat and seat belt

⚠ CAUTION

An incorrect seat setting may cause damage to the driver's back.

The adjustment controls for the driver's seat should not be used during operation.

Before starting the truck and whenever changing drivers, adjust the seat to correspond to the driver's weight and make sure that the settings have all engaged properly.

Do not place any objects in the driver's working area.

Adjusting the seat

- Pull the adjustment handle (1) up to horizontally adjust the seat.
- Slide the seat to find the best operating position relative to the steering wheel, the accelerator and brake pedals, and the joystick.
- Retract the adjustment handle (1).
- The position of the backrest can be adjusted by lifting the handle (2) upwards.
- Adjust backrest in turn until the driver finds the best sitting position.
- Release the handle (2).

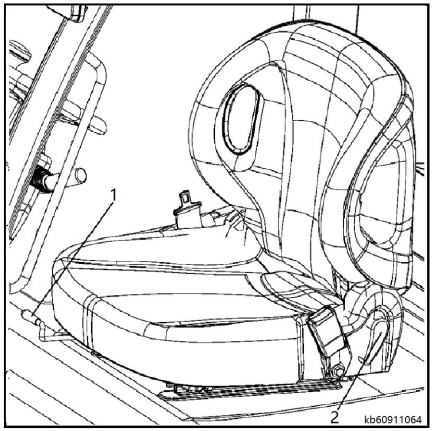

NOTE

Long periods sitting down will put excessive pressure on the spine; take regular gentle exercise to protect the back.

Fastening the seat belt

DANGER

Even when using an approved restraint system, there is some residual risk that the driver might be injured if the truck tips over.

This risk of injury can be reduced through the combined use of the restraint system and the seat belt.

In addition, the seat belt protects against the consequences of rear-end collisions and falling off a ramp.

– We therefore recommend that you also use the seat belt.

DANGER

Only bracket doors or full cabs with closed, sturdy doors constitute a driver restraint system. PVC doors (weather protection) are not a restraint system!

If the doors are open or have been removed, you must use an alternative suitable restraint system (e.g. a seat belt)!

Fastening the seat belt

DANGER

Risk to life when driving without a seat belt!

If the truck tips over or crashes into an obstacle and the driver is not wearing his seat belt, he can be hurled out of the truck. The driver could slide under the truck or collide with an obstacle. There is a risk to life!

– Fasten the seat belt before every trip.
– Do not twist the seat belt when fastening it.
– Only use the seat belt to secure one person.
– Have any malfunctions repaired by authorised dealer.

– Pull the seat belt (2) out of the belt retractor without jerking and fasten closely around the body over the thighs. ▷

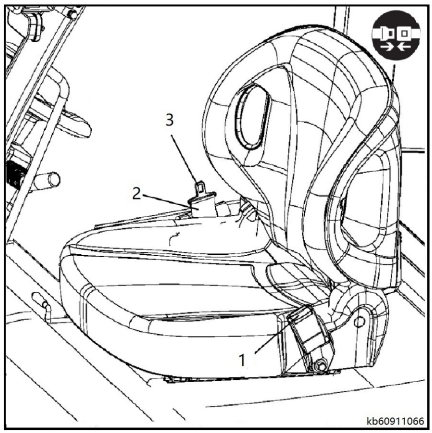

NOTE

Sit as far back as possible so that your back is leaning against the seat backrest. The automatic blocking mechanism permits sufficient freedom of movement on the seat.

– Insert the belt tongue (3) into the seat belt socket (1).

– Check the tension of the seat belt. The belt should fit closely around your body.

Fastening on a steep slope

The automatic blocking mechanism prevents the belt from being extended whenever the truck is on a steep gradient. It is no longer possible to pull the seat belt out of the belt retractor.

– Move away carefully on the slope.

– Fasten the seat belt.

Releasing the seat belt

– Push the red button (4) on the socket (1). ▷

– Manually guide the belt tongue slowly back to the retractor.

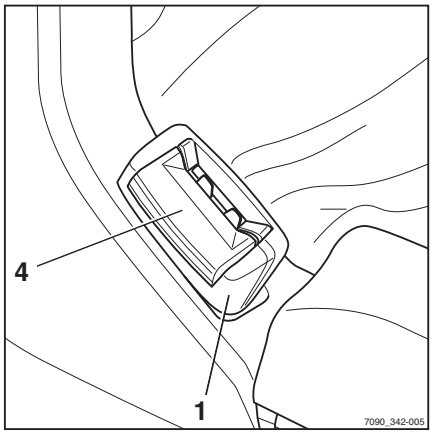

NOTE

Do not allow the seat belt to retract too quickly. The automatic blocking mechanism may be triggered if the belt tongue strikes the housing. It will then no longer be possible to pull the seat belt out with the usual force.

– Using increased force, pull the seat belt around 10-15 mm out of the retractor to disengage the blocking mechanism.

– Slowly allow the seat belt to retract again.

– Protect the seat belt from dirt (for example, by covering it).

Malfunction due to cold weather conditions

– If the buckle or belt retractor is frozen, thaw them out and dry them thoroughly to prevent recurrence.

⚠ CAUTION

Do not subject buckle or belt retractor to excessive heat when thawing out.

– Do not use air warmer than 60 °C when thawing out!

Seat belt monitoring and alarm function ▷

⚠ DANGER

The driver must sit in the driver's seat when operating the forklift truck.

The seat belt must be worn at all times that the truck is driven!

If the forklift truck is started without fastening the seat belt, the LED light shown by the arrow will flash on the display unit and the driver will be warned acoustically within 30s after switch-on of the truck.

NOTE

This function is only applicable for CE certificated forklifts.

Driver presence monitoring ▷

⚠ DANGER

The driver must sit in the driver's seat when operating the forklift truck.

When starting a truck with a driver presence monitoring system, if the drive is not sitting in the driver's seat, the truck will behave as follows:

- The LED indicator in the display unit lights up;
- The buzzer sounds;
- Unable to drive the truck;
- Unable to perform lifting, lowering, tilting etc.
- Unable to operate the attachments.

Switches

Ignition device

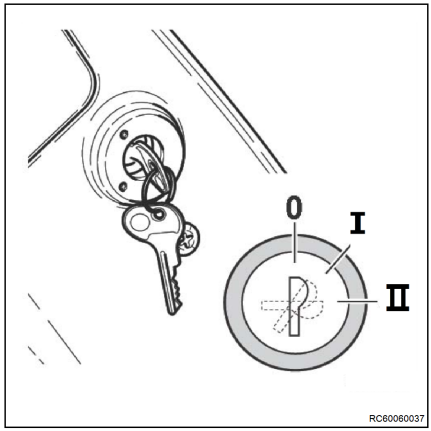

NOTE

The forklift can only be started if the reversing lever is in the centre position (neutral).

The ignition key has three positions:

Position "0"

- Key removal position (no circuit powered except for horn, stop lights; seat and ISO PCB)

Position "I"

- Pre-heating position, all circuits are powered

Position "II"

- Engine starting position

Start-up

– To start the engine, insert the key, turn it to position "II" and release it as soon as the engine starts (the key will go back to position "I").

Starting at cold temperature.

– Insert the key in the switch and turn it to position "I". The pre-heater will start automatically and the warning light (1) will come on.

– Wait for the warning light(1) to go out, then turn the key to position "II" and release it as soon as the engine fires (the key will go back to position "I").

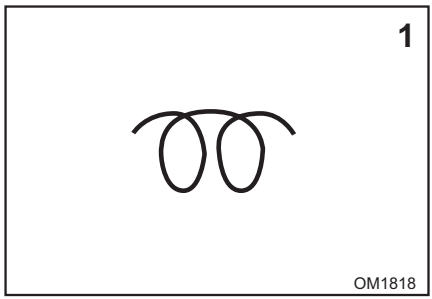

Lighting and turn indicator switch ▷

The turn indicator and the lighting are active if the ignition key is in position "I".

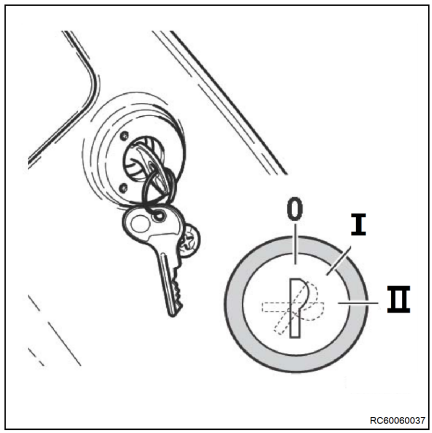

Direction indicators ▷

- When the lever (1) is moved into position "R", the right indicator light lights up.
- When the lever (1) is moved into position "L", the left indicator light lights up.

R	Turn Right
N	Neutral
L	Turn Left

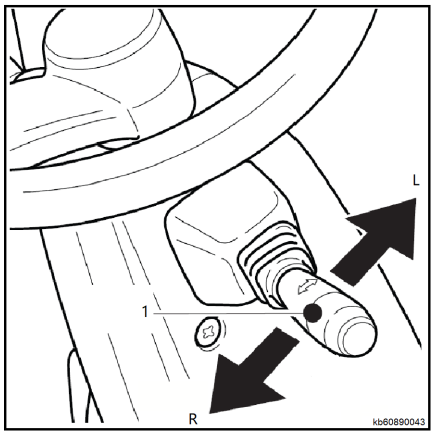

Lighting

– The lighting is switched on by turning knob (3) on the lever:

- Turning the knob to the first click switches on the clearance lights;
- Turning the knob until the second click switches on the clearance lights, front headlights, and also rear lights.

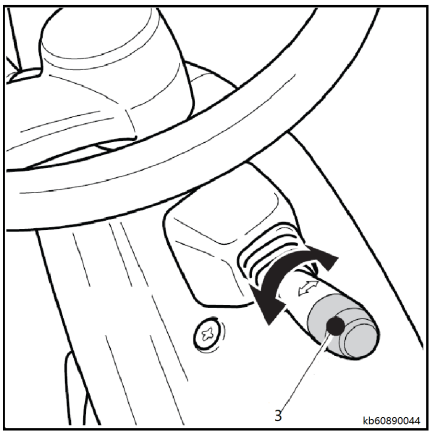

Lamp switch	0(OFF)	1st	2nd
Clearance lamp	OFF	ON	ON
Front headlights	OFF	OFF	ON
Rear combination lights	OFF	OFF	ON

Warning horn;

The horn allows the driver to draw attention to his and his truck's presence if necessary.

– Press the button (1) in the centre of the steering wheel to actuate the horn.

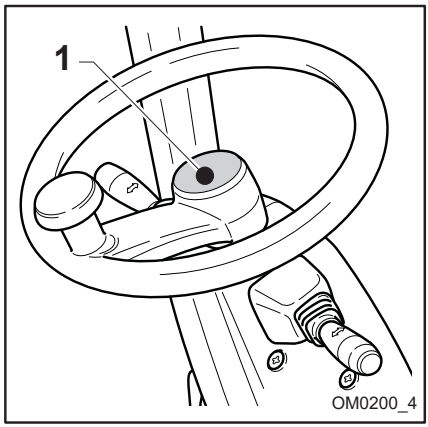

Direction selection lever

Direction selection lever (1) is used to select the required drive direction of the truck or to switch the drive mode to idling. The direction selection lever offers three different positions:

- **FORWARDS** — direction selection lever pushed forwards into position "A"
- **NEUTRAL** — direction selection lever in centre position between "FORWARDS" and "REVERSE"
- **REVERSE** — direction selection lever pulled backwards into position "B"

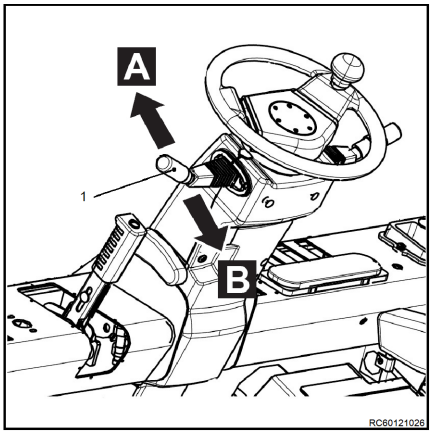

Adjusting the position of steering wheel

⚠ DANGER

Only adjust the steering column when the truck is stationary.

Angle adjustment

– Pull down the handle(1) clockwise.

– Move the steering column into the required position.

– Pull back the handle anti-clockwise to its original position.

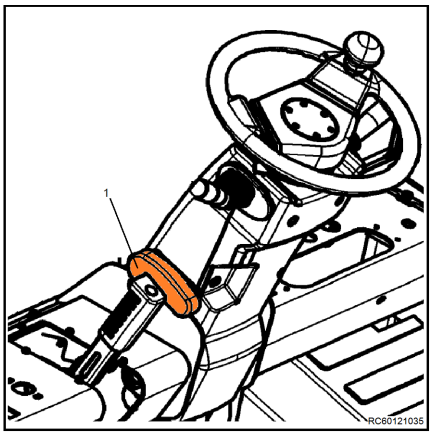

Start the engine

– Sit in the driver's seat and fasten the seat belt. Ensure that the cab doors or the driver restraint system installed on the truck is closed.

– Ensure that the direction selection lever (if present) is in the central position (neutral).

– Insert the switch key (1) and turn it to position "II". Release the switch key as soon as the engine starts. ▷

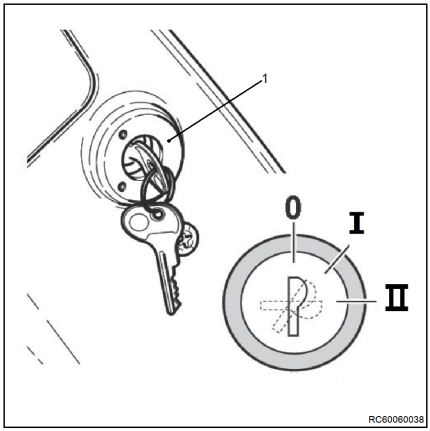

Starting the engine at low temperatures.

– Insert the switch key (1) and turn it to position "I"; hold the switch key in this position until the lamp (2) goes out. ▷

– Turn the switch key to position "II". Release the switch key as soon as the engine starts.

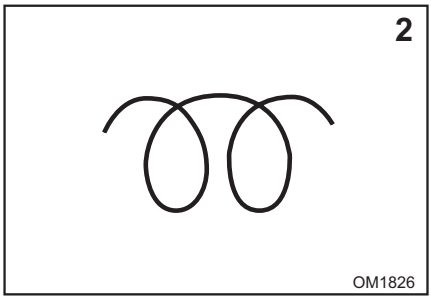

NOTE

If the engine does not start, stop the starting procedure and try again later. Wait at least one minute between start attempts in order to avoid running down the battery. If the engine still does not start after three attempts, do not try to start the engine again. Instead, contact your authorised service centre.

⚠ DANGER

Risk to health from exhaust gases! Exhaust gases from internal combustion engines are harmful to your health. In particular, the soot particles contained in the diesel exhaust gas can cause cancer. Letting the engine idle poses a risk of poisoning from the CO, CH and NO_x components contained in the exhaust gas.

Modern exhaust gas treatment systems (e.g. catalytic converters, particle filters or comparable systems) can clean exhaust gases in a way that reduces the health hazard and risk of poisoning when operating the truck.

– Observe the national laws and regulations when using trucks with an internal combustion engine in entirely or partially enclosed working areas.

– Always ensure sufficient ventilation.

⚠ DANGER

Risk to health from exhaust gases!

Do not leave the truck with the engine running in order to warm up the engine. Warm up the engine by using the truck at a low speed for a few minutes.

Diesel Particulate Filter (DPF)

Diesel oxidation catalytic converter

The diesel oxidation catalytic converter has a catalytic surface which is used to convert the pollutants in the exhaust gas into harmless substances. Here, carbon monoxides and unburned hydrocarbons are made to react with oxygen and converted into carbon dioxide and water. In addition, the nitrogen monoxides are converted to nitrogen dioxides.

Temperature > 250°C are necessary for a high degree of efficiency.

Diesel particle filter

The combustion of diesel fuel results in soot, which is separated in the diesel particle filter. This must be regenerated as the contamination with soot increases. That means that the soot in the diesel particle filter is burned.

The regeneration is based on a continuous regeneration process, which is activated as soon as the exhaust temperature of 250 °C is exceeded at the inlet of the exhaust gas after-treatment system.The filter contamination with soot is monitored continuously by the engine control unit.

Regeneration

The passive particle filter system burns the soot in the filter with the nitrogen oxides in the exhaust which are oxidised in the DOC beforehand. This process runs continuously once the exhaust temperature has exceeded 250 °C. The passive particle filter system does not contain a burner. A prerequisite for the passive continuous regeneration is having a sufficient ratio of nitrogen oxides to soot in the raw exhaust gas of the engine.

Normal operation

Under normal operating conditions (exhaust temperature > 250°C) , the filter contamination with soot remains in a permissible range and no actions are necessary.

The regeneration lamp is off.

Support mode

NOTE

During this operating state, an acoustic change occurs to the running of the engine.

If the operating conditions of the engine do not permit any passive regeneration, the contamination of the diesel particle filter with soot will increase.

A throttle valve controlled via the engine control unit is located in the combustion air inlet. This is used to increase the exhaust gas temperature for regeneration of the diesel particle filter, if this is not reached during normal operation.

This can be the case if:

- The engine only has short operating times.
- The engine workload is not high.

This process is automatically activated by the engine control unit, the operator does not need to perform any actions.

The regeneration lamp is off.

Power reduction

If a serious fault occurs a fault is not remedied, the system reacts by reducing the engine performance. There is one or two stage performance reduction depending on the type of fault.

Power reduction	
Stage 1	Torque reduction
Stage 2	Torque reduction + Engine speed limitation

Standstill regeneration

⚠ WARNING

Temperatures of approx. 600°C occur on the exhaust pipe during regeneration. A special engine operating state becomes active during standstill regeneration and the machine is not allowed to be used during the active standstill regeneration.

Danger of burns!

If the support mode does not attain an adequate reduction of the soot contamination, the filter will continue to become contaminated with soot and a standstill regeneration will be necessary.

– This is displayed by a flashing regeneration lamp(14) in the display unit. ▷

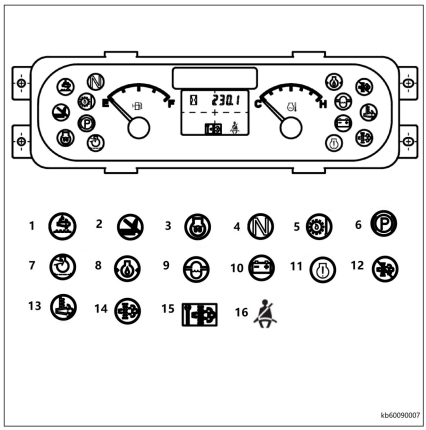

The standstill regeneration must be initiated by the operator.

We recommend carrying out a necessary standstill regeneration as quickly as possible, as otherwise the diesel particle filter will continue to become contaminated with soot.

If the standstill regeneration is not carried out, the engine control unit will activate the specified engine protection functions, depending on the contamination of the diesel particle filter.

Every standstill regeneration slightly dilutes the engine oil with fuel. The number of standstill regeneration is therefore monitored.

Implementation of the standstill regeneration

The engine must be brought into a “safe state” for the regeneration:

– Shut down the engine on an open terrain at a safe distance to flammable objects.

– Warm up the engine : the coolant temperature must reach at least 75 °C.

– Operate the engine in idling.

- Activating the parking brake, and the parking brake indicator light(6)comes on.
- Engaging the gear shift in the neutral position.

– Pressing the regeneration switch(1). ▷

– The regeneration lamp(14) lights up continuously.

– The HEST(high exhaust system temperature)lamp(13) lights up during regeneration period. This light notifies the driver when hot exhaust gas is vented from the engine. Ensure that there is no combustible material around the exhaust pipe.

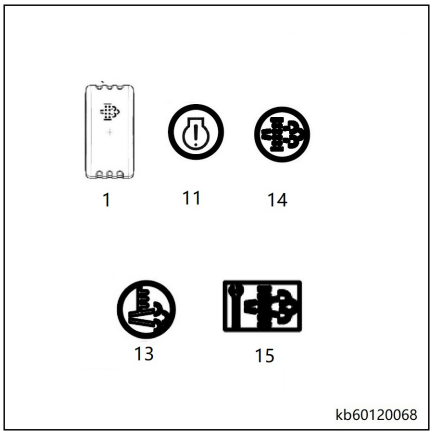

Once the standstill regeneration has been released, the engine automatically increases the speed level. Using the truck during standstill regeneration is prohibited.

The regeneration lasts 35 to 40 minutes on average.

The standstill regeneration can be interrupted at any time by pressing the regeneration button again or by canceling the regeneration release.

Using the truck during standstill regeneration also leads to it being interrupted.

The request for standstill regeneration remains until it is completed without interruption.

Certain engine faults lead to excessive carbon emission which can't be seen due to the diesel particle filter.

In such cases, the diesel particle filter can be loaded very quickly, among other things, to a level which no longer allows a standstill regeneration by the operator.

Very short intervals between two standstill regeneration (< 10 hours) can be an indication of such a defect. Please contact the authorization dealer.

The regeneration lamp goes out when regeneration has been sucessfully completed.

If the standstill regeneration request is not observed and the DPF is overloaded to an impermissible level, then the filter can only be regenerated via the authorization service.

Replacing the diesel particle filter

It may be necessary to replace the diesel particle filter after a high filter running time as

non-combustible residues accumulate in the filter so-called ash.

If the ash loading goes beyond a certain level, this will be indicated by the ash lamp. The diesel particle filter needs to be replaced.

The truck can operate normally until the replacement is carried out by the authorization service.

The time interval between two regeneration requests is shortened in proportion to the run time. Please contact the authorization service.

DEUTZ particle filters come with a catalysing coating, so require a special cleaning procedure to prevent damage to the coating. The DEUTZ filter replacement programme guarantees that the filter medium is properly cleaned, and the medium fully functions and performs as if it were an new part.

Regeneration indication

Display instrument symbols (refer to picture"kb60120068")			Power reduction	Remark
Regeneraton light(14)	Engine error light(11)	Ash condition indicator(15)		
Off	Off	Off		Normal operation
Off	Off	Off		Support mode
Flashes (0.5Hz)	Off	Off		Standstill regeneration required Approval by the operator required
Flashes (1Hz)	Continuous light	Off	Stage 1	Standstill regeneration required Approval by the operator required
Flashes (1Hz)	Flashing	Off	Stage 2	Please contact the authorization service
Continuous light	Off	Off		Standstill regeneration
Off	Off	Continuous light		100% ash load Please contact the authorization service
Off	Off	Flashing		100% ash load Please contact the authorization service

Driving

Driving

⚠ CAUTION

When using mirrors, ensure that the rear-view mirror is only used for monitoring the traffic behind the vehicle. Reverse travel is therefore only permitted when looking directly behind you.

⚠ CAUTION

Always tilt the mast backwards and lower the fork arms to the ground around 300mm.

⚠ CAUTION

Check the safety around the forklift and sound the horn before starting the truck.

NOTE

The drive functions of the truck are only activated when the driver's seat is occupied.

– Sit in the driver's seat and fasten the safety belt.

– Start the engine.

– Release the parking brake (1) , and the corresponding LED(2) will turn off. ▷

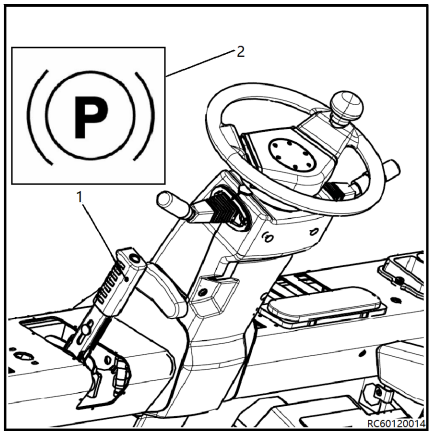

– Move direction selection lever (3) in the required drive direction: (A) FORWARDS, (B) BACKWARDS. ▷

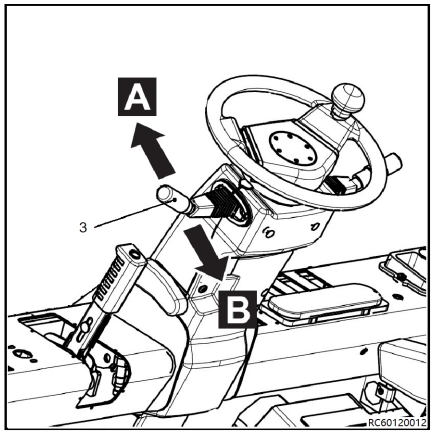

– Gently press the accelerator pedal(4) to set off. ▷

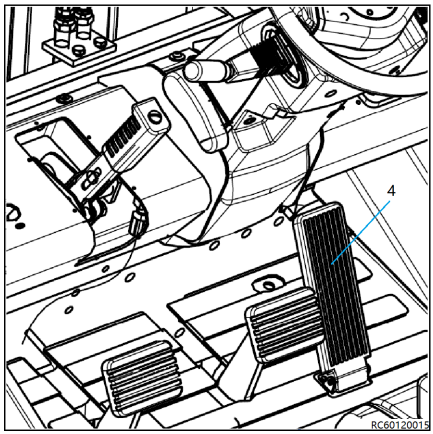

Forward

– Put the direction lever into the forward direction.

– Smoothly press the accelerator pedal

The speed of the forklift truck accelerates in relation to the increase in pedal travel.

Reversing

– Place the direction lever in the reverse direction.

– Steadily press the accelerator pedal

The speed of the forklift truck accelerates in relation to the increase in pedal travel.

Changing direction of travel

– To change direction, release the accelerator pedal (2) . ▷

– Press the service brake pedal (1) until the truck comes to a complete stop.

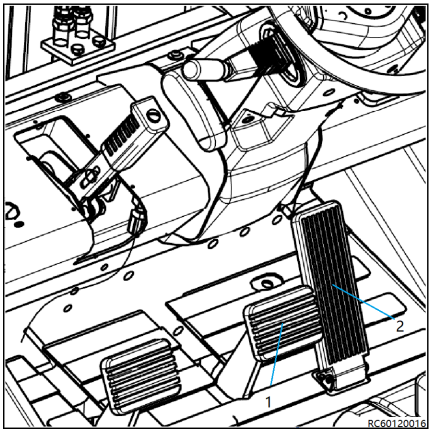

– Move the lever (3) in the opposite direction of travel: (A) FORWARDS, (B) BACKWARDS; then press the accelerator pedal (2) . ▷

The forklift truck will now accelerate in the new drive direction.

⚠ DANGER

Using operating lever to directly reverse the operating direction of the forklift truck during operation is strictly prohibited. Reversing direction during operation will result in damage to the forklift truck.

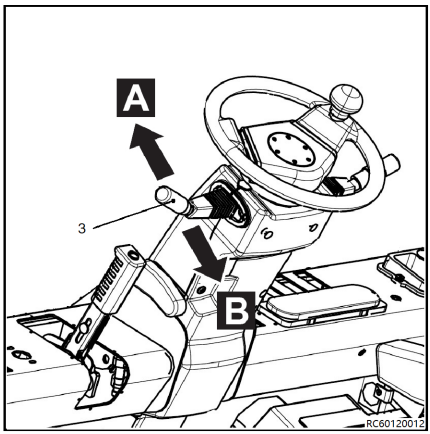

Brake system

Driving brake pedal and inching pedal ▷

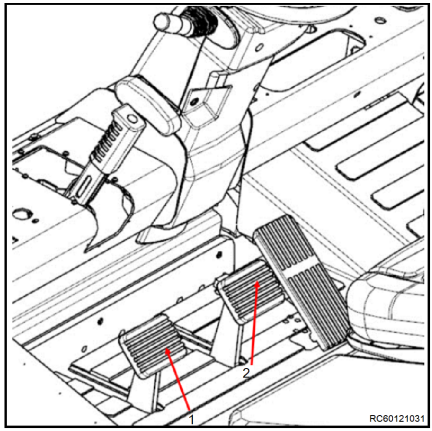

NOTE

We recommend that the driver familiarizes himself with the efficacy of the braking apparatus when the forklift truck is not carrying a load. Operate the forklift truck slowly on an uncrowded road surface to test travelling functions.

Driving brake pedal

Press the brake pedal(2)to slow or stop the truck. At the same time, the brake lights come on.

Inching pedal

- If the inching pedal (1) is depressed, the engine is disengaged at the beginning of the pedal travel. The service brake begins to grip when the pedal is depressed further.
- Small, precise movements of the truck are possible when you actuate the inching pedal (1) lightly if the accelerator pedal is actuated as well. Actuate the pedal (1) in order to move the truck gradually, even if the engine is running at full capacity.

Operating the service brake

Braking and stopping

⚠ DANGER

At speeds that are too high, there is a danger that the truck could slip or overturn!

The braking distance of the truck depends on the weather conditions and the level of contamination on the roadway. Note that the basic braking distance increases with the square of the speed.

- Adapt your driving and braking style to suit the weather conditions and the level of contamination on the roadway.
- Always choose a driving speed that will provide a sufficient stopping distance.

– Take the foot off the accelerator pedal (1).
– Press the brake pedal (2) until the truck is stationary.
– Actuate the parking brake to keep the fork-lift truck braked.

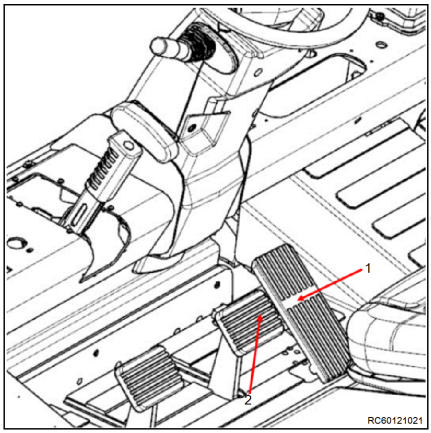

Procedure in the event of failure of the service brake

– Bring the truck to a standstill by actuating the parking brake and park it securely.
– Do not operate the truck again until the service brake has been repaired and is functional.

Parking brake

The parking brake must be actuated every time the driver exits the truck.

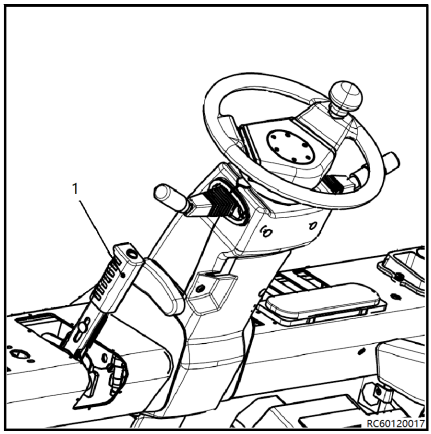

NOTE

If the driver exits the truck without actuating the parking brake, a warning signal sounds. This signal even sounds if the truck has already been switched off and the ignition and stop key has been removed.

Actuating the parking brake:

– Pull down the parking brake lever(1) until the lock position is reached and the parking brake indicator light comes on.

Releasing the parking brake:

– Press the button(1) on the parking brake and release the parking brake lever. The parking brake will return to its original position and the parking brake indicator light will turn off.

DANGER

The forklift truck must not be operated if there are problems with the braking system.

If there is a fault with the braking system or parts of the system have abraded, please contact your authorised dealer.

Lifting system and attachments

Operating the lifting device

⚠ DANGER

When the lifting device or any attachments are moving, there is a danger the driver will be caught between the lifting device and the forklift truck.

Therefore, the driver must not be located at or enter in between the lifting device and the forklift truck. The lifting device and attachments may only be used for their specified uses. The driver must receive training related to the operation of the lifting system and attachments. Keep in mind the maximum lift height.

– Take note of the switching symbols with arrows. ▷

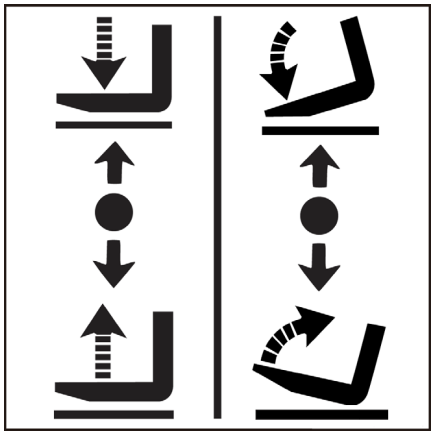

Operation of the control lever must be slow and steady. Lifting, lowering and tilting speeds depend on the range of motion of the control level.The control lever will automatically return to neutral when released.

Lifting the fork carriage ▷

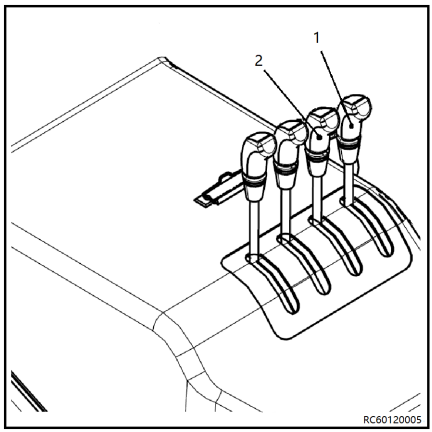

⚠ DANGER

If any danger occurs when raising the lift mast, immediately stop raising the fork arms.

– Push the control lever (1) back.

Lower the fork carriage

– Push the control lever (1) forward.

Tilting the lift mast forward

– Push the control lever (2) forward.

Tilting the lift mast backward

– Push the control lever (2) back.

When transporting a load, tilt the lift mast backwards for better stability.

Operating attachments

Attachments are optional pieces of equipment installed on the forklift truck: (such as sideshift forks, rotators, clips, etc.). Please do not exceed the working pressure of attachments during operation, and ensure that operation is in compliance with datasheets. One or two additional control levers can be installed to operate attachments.

NOTE

Below is a description of attachment operations. The forklift truck can be configured with different operating levers.

– Take note of the switching symbols with arrows ▷

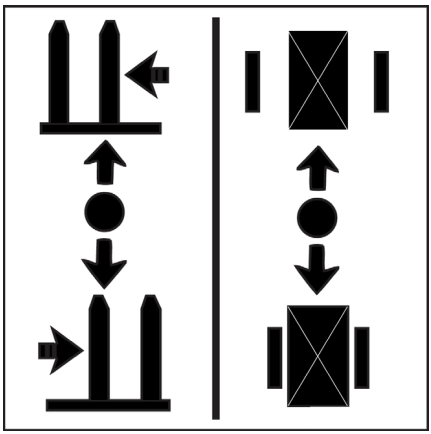

Sideways movement

▷

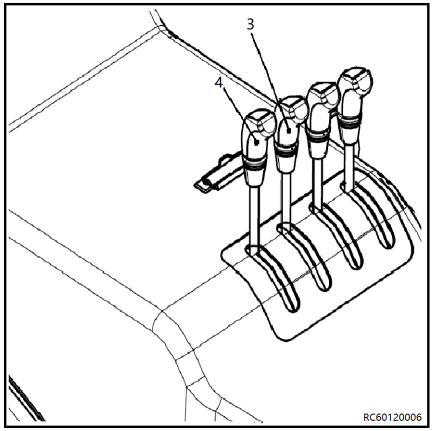

NOTE

In order to prevent damage, do not operate in a sideways direction when the fork arms are on the ground.

– Push the control lever (3) forwards and move to the left.

– Push the control lever (3) backwards and move to the right.

Operating fixtures

– Push the control lever (4) forwards to open the jig.

– Push the control lever (4) backwards to clamp the jig.

Handling loads

Safety regulations when handing loads ▷

The safety regulations for handling loads are shown in the following sections.

⚠ DANGER

There is a risk to life caused by falling loads or if parts of the truck are being lowered.

- Never walk or stand underneath suspended loads or raised fork arms.
- Never exceed the maximum load indicated on the capacity rating plate. Otherwise stability cannot be guaranteed!

⚠ DANGER

Risk of accident from falling or crushing!

- Do not step onto the forks.
- Do not lift people.
- Never grab or climb on moving parts of the truck.

⚠ DANGER

Risk of accident from a falling load!

- When transporting small items, attach a load safety guard (variant) to prevent the load from falling on the driver.
- Use a closed roof covering (variant) in addition.

Load centre distance and load capacity

Before lifting goods, the relationship between the weight, load centre of gravity distance and maximum lift height of the goods must be understood.

Load centre distance refers to the distance between the vertical plane of the fork arms and the centre of gravity of the loads(1).

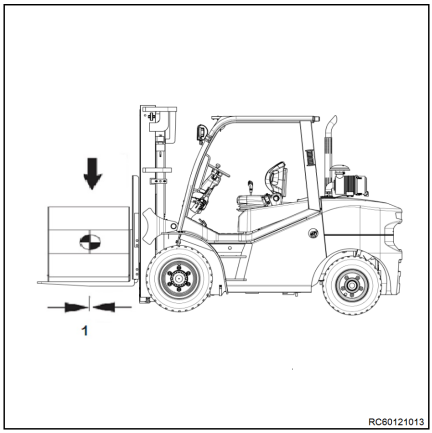

NOTE

The centre of gravity of a load is not necessarily located at the central point of the load itself. The load capacity refers to the weight of goods able to be lifted to a specified height within a given load centre distance.

NOTE

Check the load limits. In the following circumstances, please contact your authorised dealer before operating.

- *Before lifting irregular loads or goods that sway.*
- *Where the load centre of gravity distance is excessively long.*
- *Before using attachments.*

Capacity plate

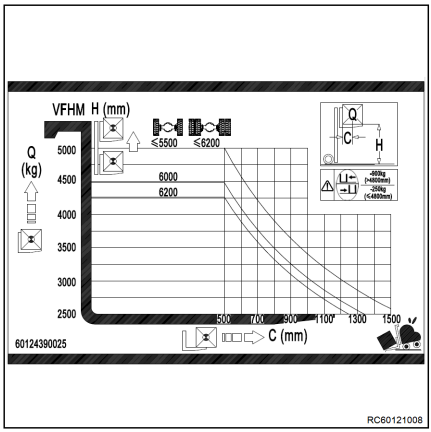

DANGER

The parameters in the load diagram and on the labels apply to compact, uniform loads. These load limits must not be exceeded. Exceeding the load limits will affect the stability of the forklift truck and the strength of the lift mast.

Refer to the CAPACITY CHART before lifting goods. If attachments are fitted, refer to the load rating label for the attachment.

For example:

Truck model: RCD50 with single tyre

Load centre: 500 mm

Lift height: ≤5500 mm

In this case, the maximum load capacity is: 5000 kg

– Before loading, make sure that the dimensions and weight of the load are within the approved standard specified in the “Technical datasheet” chapter and on the load rating plate.

– Before operating an attachment, read the load capacity data plate on the attachment.

Before lifting a load

Before lifting a load, check the load capacity diagram (1) on the engine cover.

The maximum capacity is determined by the lifting height and the load centre distance.

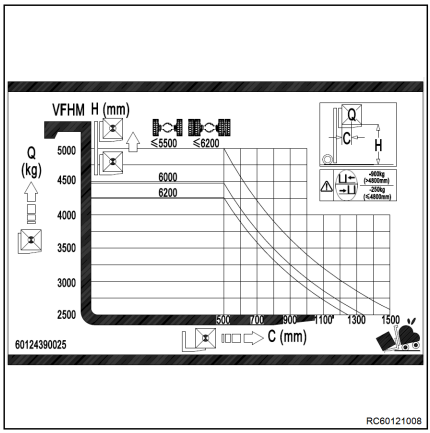

NOTE

Check the load capacity limits and contact your authorised dealer before transporting:

– off-centre or swinging loads

– loads with the mast tilted forwards or the load not near the ground

– loads beyond the centre of gravity

– before operating attachments

– loads at wind force 6 and higher

Transporting pallets

As a rule, loads (e.g. pallets) must be transported individually. Transporting multiple loads at the same time is only permitted:

- when instructed by the supervisor and
- when the technical requirements have been met.

The driver must ensure proper condition of the load. Only safely and carefully positioned loads may be transported.

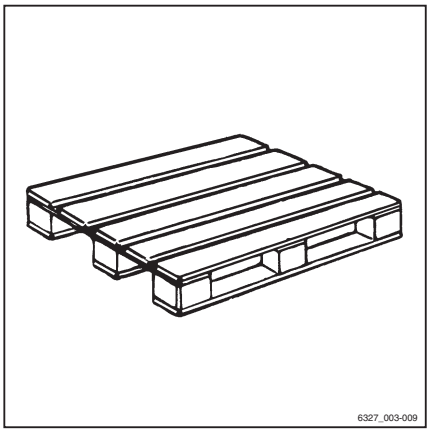

Danger area

The danger area is the area in which people are at risk due to the movements of the truck, its working equipment, its load-carrying equipment (e.g. attachments) or the load. Also

included are the areas where loads could fall or working equipment could fall or be lowered.

⚠ DANGER

Risk of injury!

– Do not step on the fork.

⚠ DANGER

Risk of injury!

– Do not step under the raised forks.

⚠ DANGER

People may be injured in the danger area of the truck!

The danger area of the truck must be completely clear of all personnel, except the driver in his normal operating position. If persons fail to leave the danger area despite warnings:

– Cease work with the truck immediately.

– Secure the truck against use by unauthorised parties.

⚠ DANGER

Danger of death from falling loads!

– Never walk or stand underneath suspended loads.

Transporting suspended loads ▷

Before transporting suspended loads, consult the national regulatory authorities (in Germany, the employer's liability insurance associations).

National regulations may place restrictions on these operations, e.g. in Italy. Contact the relevant authorities.

If there are no country-specific regulations for suspended loads in the country of use, the following instructions for safe handling must be observed.

⚠ DANGER

Suspended loads that begin to swing can result in the following risks:

- Impaired braking and steering movement
- Tipping over the load wheels or drive wheels
- Tipping the truck at right angles to the drive direction
- Risk of crushing of guide persons
- Reduced visibility

⚠ DANGER

Loss of stability!

Slipping or swinging suspended loads can lead to a loss of stability and cause the truck to tip over.

– When transporting suspended loads, observe the following instructions.

Instructions for transporting suspended loads:

- Swinging loads must be prevented by using the proper driving speed and driving style (careful steering, braking).
- Hanging loads must be hooked on to the truck in such a way that the harness cannot shift or release unintentionally and cannot be damaged.
- When transporting suspended loads, suitable aids (e.g. guy wires or supporting poles) must be available so that accompanying persons can guide suspended loads and prevent the loads from swinging.
- Take particular care to ensure that there is no one in the drive direction in the driving lane.
- If, despite this, the load begins to swing, ensure that no person is placed at risk.

⚠ DANGER

Risk of accident!

When transporting suspended loads, never perform or end driving and load movements abruptly.

Never drive on slopes with a suspended load.

Transporting containers holding fluids as hanging loads is not permitted.

Adjusting the fork arm distance

– Raise the knob (2) and rotate it by 90°. ▷

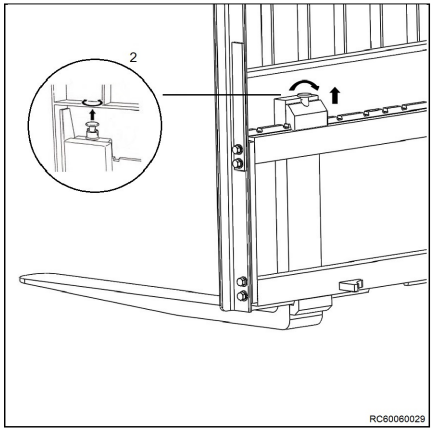

– Adjust the fork arms (1) according to the dimensions of the load to be lifted. ▷
– Ensure that an equal distance is maintained from both fork arms to the centre line of the fork carriage.
– Ensure that the fork arms are locked in one of the grooves on the fork carriage using the knob (2).

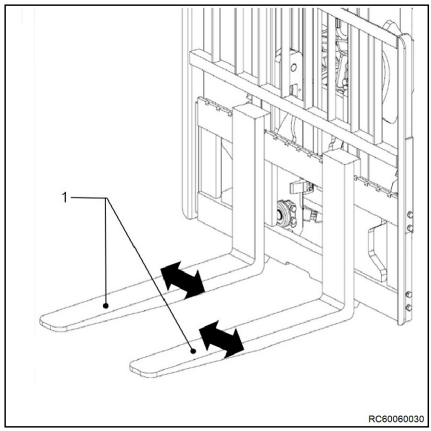

⚠ CAUTION

For greater load stability, the distance between the two fork arms must be as large as possible while remaining consistent with the lifting points of the load, so that the load centre of gravity is between the fork arms.

⚠ CAUTION

For greater load stability, the position of the fork arms must be as symmetrical as possible with respect to the centre of the fork carriage.

Picking up a load

⚠ DANGER

The truck may tip over if the load is too heavy.

Before picking up the load, check that the dimensions and weight of the load lie within the permitted range for the truck. This information can be found on the capacity rating plate.

⚠ DANGER

There is a risk to life caused by a falling load or if parts of the truck are being lowered.

- Never walk or stand underneath suspended loads or raised fork arms.
- Never exceed the maximum load values specified on the capacity rating plate. Otherwise, stability cannot be guaranteed.

- Only store pallets that do not exceed the specified maximum size. Damaged loading equipment and incorrectly formed loads must not be stored.
- Attach or secure the load to the lifting accessory so that the load cannot move or fall.
- Store the load so that the specified aisle width is not reduced by protruding parts.
- Drive carefully towards the racking. ▷

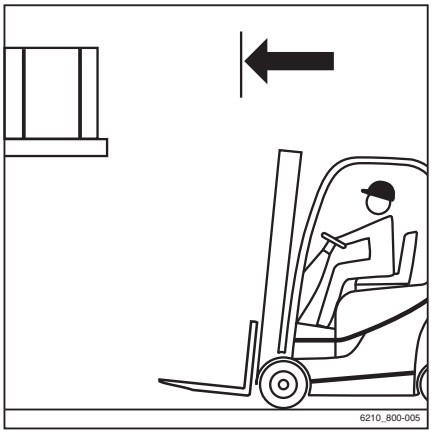

– Position the forks.
– Set the lift mast to vertical.
– Lift the fork carriage to the stacking height.

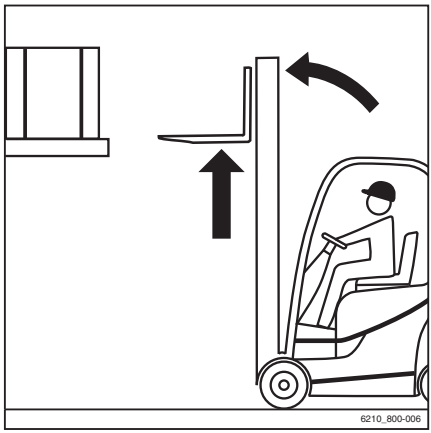

DANGER

Risk of accident due to changed moment of tilt!

If a truck is operated with a forwards tilt (variant) of more than 3°, there is a greater risk of the load slipping when the load is raised or lowered. The load centre of gravity and the moment of tilt change when the load slips. The truck may tip forwards.

– Only tilt the lift mast forwards with a raised lifting accessory when it is directly above the stack.
– When the lift mast is tilted forward, take particular care to ensure that the truck does not tip forwards and that the load does not slip.

CAUTION

Component damage possible!

When inserting the fork into the racking, ensure that the racking and load are not damaged.

– Insert the fork as far under the load as possible using the brake Inching pedal. Stop the truck using the service brake as soon as the fork back is resting against the load. The load centre of gravity must be midway between the fork arms.

– Lift the fork carriage until the load is resting entirely on the fork. ▷

NOTE

The lifting speed can be increased by adjusting the engine speed. Refer to the chapter entitled "Increasing the lifting speed".

DANGER

Risk of accident!

– Beware of any people in the danger area.

CAUTION

Component damage possible!

– Ensure that the roadway behind you is clear.

– Move backwards carefully and slowly until the load is clear of the racking. Brake gently.

DANGER

Never tilt the lift mast with a raised load due to the risk of tipping!

– Lower the load before tilting the lift mast.

– Lower the load while maintaining ground clearance. ▷

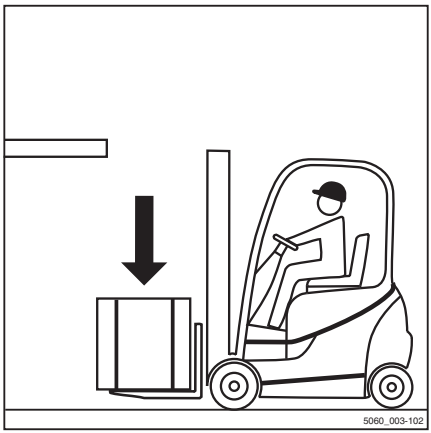

– Tilt the lift mast backwards. The load can now be transported.

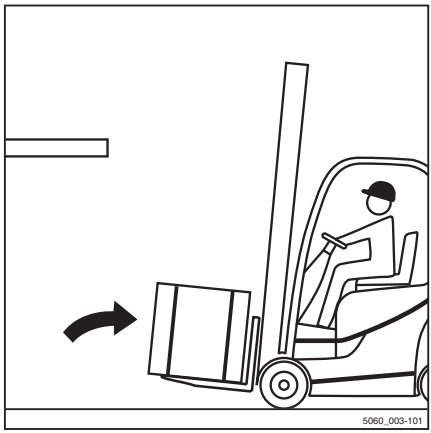

Increasing the lifting speed

– Fully depress the brake Inching pedal (1) and hold it down. The drive wheels are now uncoupled from the engine.

– Pull the "lift" operating lever as far back as possible. The truck begins to lift.

– Depress the accelerator pedal (2) to increase the engine speed. This action increases the lifting speed. In this way, the lifting speed can be controlled using the accelerator pedal.

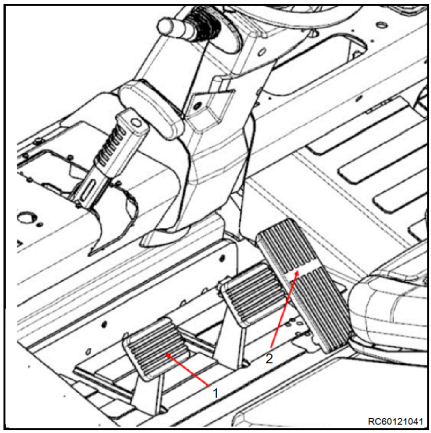

Transporting loads

NOTE

Observe the information in the chapter entitled "Safety regulations when driving".

DANGER

The higher a load is lifted, the less stable it becomes. The truck can tip over or the load can fall, increasing the risk of accident!

Driving with a raised load and the lift mast tilted forward is not permitted.

- Only drive with the load lowered.
- Lower the load until ground clearance is reached (not over 300 mm).
- Only drive with the lift mast tilted backwards.

- Drive slowly and carefully round corners!

NOTE

Observe the information in the chapter entitled "Steering".

- Always accelerate and brake gently!

NOTE

Observe the information in the chapter entitled "Operating the service brake".

– Never drive with a load protruding to the side (e.g. with the sideshift)!

▷

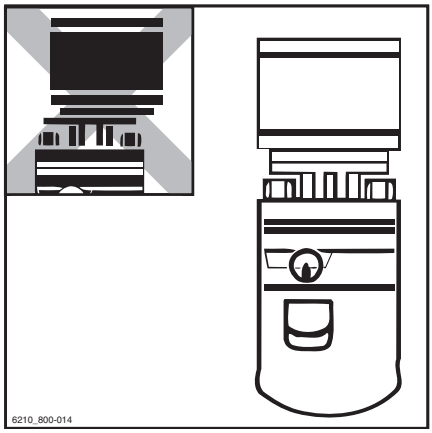

Determining visibility conditions when driving with a load

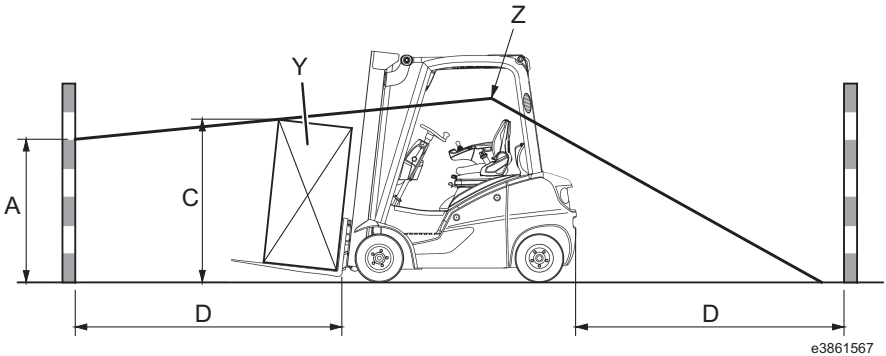

A	Area that is not visible (max. 1085 mm)
C	Load height (in driving position)
D	4000 mm (distance to the front from the rear corner of the load when it is positioned on the fork carriage in the driving position)
Y	Load (varies depending on operator)
Z	Driver's eye level

The driver's field of vision can be severely limited when driving with a larger load or with attachments fitted. In this case, safe operation is no longer guaranteed.

Visibility conditions can be evaluated by determining the size of the area that is not visible (A).

Procedure:

- The driver moves into position in his seat.
- The area that is not visible (A) is determined based on the load (Y) and the length of the route (D).
- If the area that is not visible exceeds 1085 mm (EN16842-2/A3), the visibility conditions are inadequate.

In the case of inadequate visibility conditions, the following measures are possible:

- Reverse travel (see illustration)
- Splitting the loads
- Optimising the transport routes
- Using support staff, e.g. as a guide

The operating company must complete a risk analysis in order to evaluate visibility obstructions that may be encountered during operation.

The risks of poor visibility due to the load must be weighed against the risk of health-related consequences due to the upper body being twisted during reverse travel.

A rotary seat can be used to assist the driver when reversing.

Contact your service partner.

NOTE

Any applicable national regulations must be observed.

Driving on ascending and descending gradients

DANGER

Danger to life!

Driving on ascending and descending gradients carries special dangers!

– Always follow the instructions below.

– On ascending and descending gradients, the load must be carried facing uphill.
– It is only permitted to drive on ascending and descending gradients that are marked as traffic routes and that can be used safely.
– Ensure that the ground to be traversed is clean and provides a good grip.
– Do not turn on ascending and descending gradients.
– Do not drive onto or along ascending and descending gradients at an angle.
– Do not park the truck on ascending or descending gradients.
– In case of emergency, secure the truck with wedges so that the truck does not roll away.
– Reduce the driving speed on descending gradients.

It is not permitted to drive on long ascending and descending gradients greater than 15% due to the specified minimum braking and stability values.

– Before driving on ascending and descending gradients greater than 15%, consult the authorised service centre.

The process of placing loads into stock and removing loads from stock while on an ascending or descending gradient is not permitted!

– Always place loads into stock and remove loads from stock on a horizontal plane.

Driving on lifts

The driver may only use this truck on lifts with a sufficient rated capacity and for which the operating company has been granted authorisation.

⚠ DANGER

There is a risk to life if you are crushed or run over by the truck.

- There must be no personnel already in the lift when the truck is driven into the lift.
- Personnel are only permitted to enter the lift once the truck is secure, and must exit the lift before the truck is driven out.

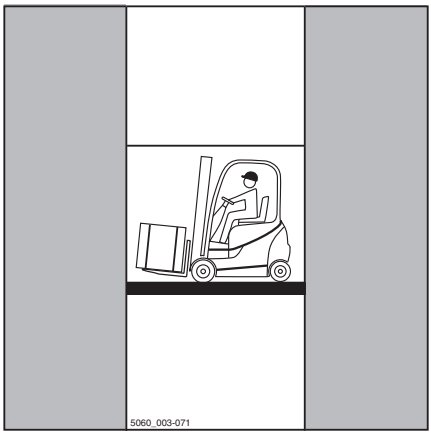

Determining the actual total weight

- Park the truck securely.
- Determine the unit weights by reading the truck nameplate and, if necessary, the attachment (variant) nameplate and, if necessary, by weighing the load to be lifted.
- Add the determined unit weights to obtain the actual total weight of the truck:

  Tare weight (1)

  \+ Ballast weight (variant) (2)

  \+ Attachment net weight (variant)

  \+ Weight of the load to be lifted

  \+ 100 kg allowance for driver

  = Actual total weight

- Drive the truck with the forks forwards into the lift without touching the shaft walls.
- Park the truck securely in the lift to prevent uncontrolled movements of the load or the truck.

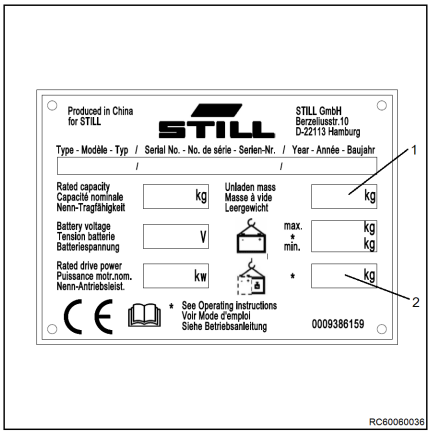

Transport of swinging loads

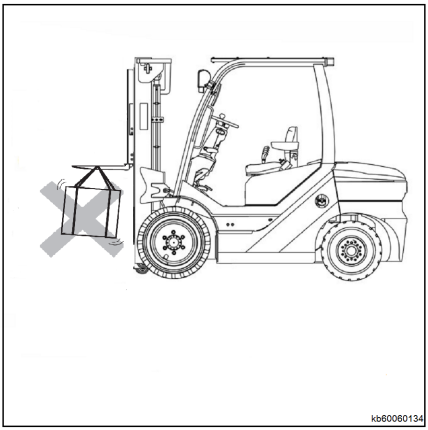

Before transporting suspended loads, consult the national regulatory authorities.

National regulations may place restrictions on these operations. Contact the relevant authorities.

⚠ DANGER

Suspended loads that begin to swing can result in the following risks:

- Impaired braking and steering action
- Tipping over the load wheels or drive wheels
- Tipping the truck at right angles to the direction of travel
- Risk of crushing of guide persons
- Reduced visibility.

⚠ DANGER

Loss of stability.

Slipping or swinging suspended loads can lead to a loss of stability and cause the truck to tip over.

– When transporting suspended loads, observe the following instructions

Instructions for transporting suspended loads:

- Swinging loads must be prevented by using the proper driving speed and driving style (careful steering, braking)
- Hanging loads must be hooked on to the truck in such a way that the harness cannot shift or release unintentionally and cannot be damaged
- When transporting suspended loads, suitable devices (e.g. guy wires or supporting poles) must be available so that accompanying persons can guide suspended loads and prevent the loads from swinging
- Take particular care to ensure that there is no one in the drive direction in the driving lane
- If, despite this, the load begins to swing, ensure that no person is placed at risk

⚠ DANGER

Risk of accidents!

When transporting hanging loads, never perform or end driving and load movements abruptly.

Never drive on slopes with a suspended load.

Transporting containers holding fluids as hanging loads is not permitted.

Driving on loading bridges ▷

⚠ DANGER

Risk of accident if the truck crashes!

Steering movements can cause the tail end to veer off the loading bridge towards the edge. This may cause the truck to crash.

The lorry driver and the truck driver must agree on the lorry's departure time.

- Before driving across a loading bridge, ensure that it is properly attached and secured and has a sufficient load capacity (lorry, bridge etc.).
- Drive slowly and with care on the loading bridge.
- Ensure that the vehicle onto which you will be driving is secured to prevent it from shifting and that it can support the load of the truck.

Determining the actual total weight ▷

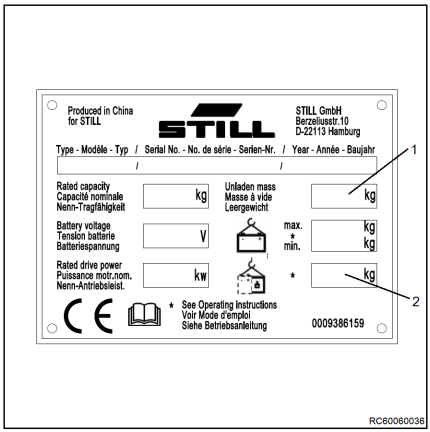

- Park the truck securely.
- Determine the unit weights by reading the truck nameplate and, if necessary, the attachment (variant) nameplate and, if necessary, by weighing the load to be lifted.
- Add the determined unit weights to obtain the actual total weight of the truck:

  Tare weight (1)

  \+ Ballast weight (variant) (2)

  \+ Attachment net weight (variant)

  \+ Weight of the load to be lifted

  \+ 100 kg allowance for driver

  = Actual total weight

Setting down loads

DANGER

Risk of accident due to changed moment of tilt!

Please note that the lift mast can be tilted far enough forwards with a raised load to cause the truck to tip over. The load centre of gravity and the moment of tilt both change when the load slips. The truck may tip forwards.

- Only tilt the lift mast forwards with a raised lifting accessory when it is directly above the stack.
- When the lift mast is tilted forwards, take particular care to ensure that the truck does not tip forwards and that the load does not slip.

NOTE

If the truck is to be used to place a raised load in storage with the lift mast tilted forwards, e.g. in a rack with sloping racking channels, an additional load capacity diagram must be created because the stability will be affected. Please contact the authorised service centre.

WARNING

Risk of accident from a falling load!

If the fork or the load remains suspended during lowering, the load may fall.

- When removing a load from storage, move the truck far enough back so that the load and the fork can be lowered freely.

- Drive up to the stack with the load lowered in accordance with regulations. ▷
- Set the lift mast to vertical.
- Lift the load to the stacking height.
- Drive the truck carefully into the stack. Use the brake Inching pedal at the same time

– Lower the load until it rests securely on the racking.
– Look behind!
– Move the truck back until the fork arms can be lowered without touching the stack.
– Lower the fork to the ground clearance position.
– Tilt the lift mast backwards and drive away.

▷

Towed load

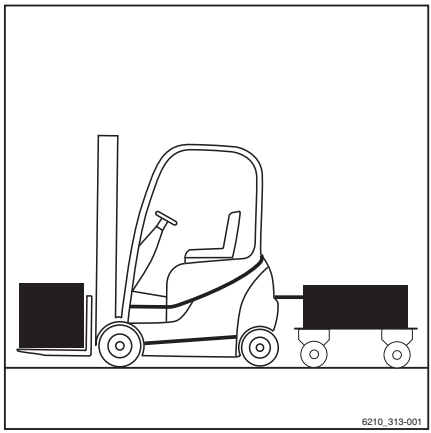

DANGER

There is an increased risk of accident when using a trailer.

Using a trailer changes the truck handling characteristics. When towing, operate the truck such that the trailer train can be safely driven and braked at all times. The maximum permissible speed when towing is 5 km/h.

- Do not exceed the permissible speed of 5 km/h.
- Do not couple the truck in front of rail vehicles.
- The truck must not be used to push any kind of trolley.
- It must be possible to drive and brake at all times.

CAUTION

Risk of damage to components!

The maximum towed load for occasional towing is the rated capacity specified on the nameplate. Overloading can lead to component damage on the truck. The sum of the actual towed load and the actual load on the fork must not exceed the rated capacity. If the existing towed load corresponds to the rated capacity of the truck, no load may be transported on the fork at the same time. The load can be distributed between the fork and the trailer.

- Check the load distribution and adjust it to correspond to the rated capacity.
- Observe the permissible rigidity value of the tow coupling.

CAUTION

Risk of damage to components!

The maximum towed load only applies when towing unbraked trailers on a level surface (maximum deviation +/- 1%) and on firm ground. The towed load must be reduced if towing on gradients. If necessary, notify the authorised service centre of the application conditions. The service centre will provide the required data.

- Inform the authorised service centre.

CAUTION

Risk of damage to components!

A support load is not permitted.

- Do not use trailers with tillers supported by the tow coupling.

This truck is suitable for the occasional towing of trailers. If the truck is equipped with a towing device, this occasional towing must not exceed 2% of the daily operating time. If the truck is to be used for towing on a more regular basis, the manufacturer should be consulted.

Forklift towing

The forklift can be towed, in case of breakdown, using the tow coupling (1) Before towing models with reversing lever on the steering wheel, check that this lever (2) is in the central position.

⚠ CAUTION

During the towing operation, the operator must be on board the forklift in order to perform the steering and braking operations and the engine must be running.

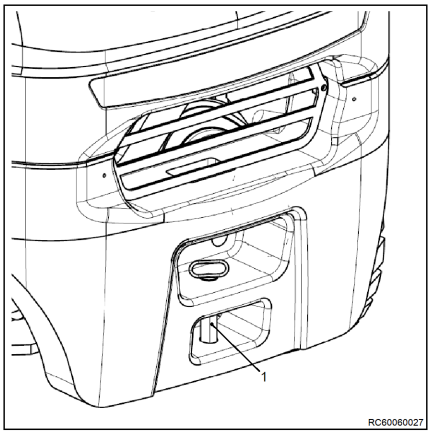

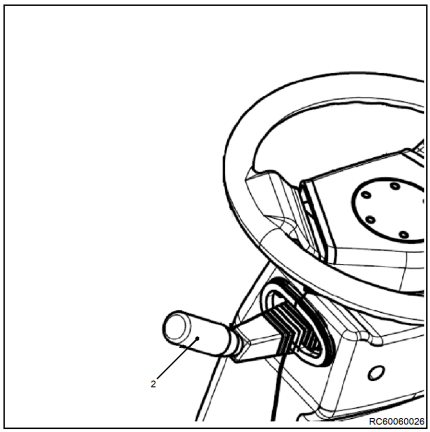

Leaving the truck temporarily

If you want to leave the truck temporarily to perform simple tasks in the vicinity of the truck (for example, order picking, opening the door or hitching a trailer) while keeping the ignition

switched on, you must observe the following precautions:

- Lower the fork carriage. Tilt the mast forward.
- Ensure the direction control lever and all the operating levers in the neutral position.
- Activate the parking brake.
- The parking symbol Ⓟ on the display unit comes on and remains lit. The truck is braked. ▷

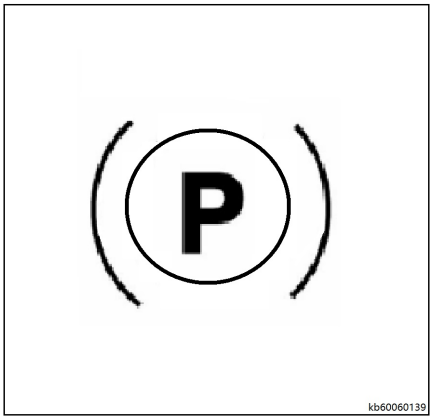

⚠ WARNING

Make sure that the truck does not move.

NOTE

When leaving the truck temporarily, be sure to keep the truck under constant supervision.

Leaving the truck

- Before exiting the truck, lower the forks to the ground, tilt the mast forwards.
- Ensure the direction control lever and all the operating levers in the neutral position.

Leaving the truck

- Apply the parking brake (1). ▷
- Switch off the truck by turning the key from “II” position to the “0” position.
- Remove the ignition key.

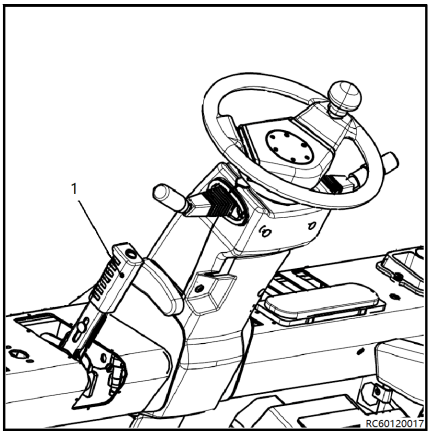

⚠ DANGER

Do not switch off the truck by turning the key when the truck is moving.

⚠ DANGER

NEVER leave the forklift truck without having first applied the parking brake (1) and removed the key. NEVER park the truck on a gradient or slope. The truck may only be parked on a slope in emergency situations. In this case, suitable wheel chocks must be positioned under the front wheels.

Truck storage

Truck Storage

Before storage

Before storing your forklift truck, clean it thoroughly and perform inspection as the following procedures.

- Wipe away grease, oil, etc. covering the body of the truck with waste cloth, if needed
- While washing the body of the truck, check general condition of the truck. Especially check the truck's body for recess or damage and tires for wear and nails or stones in the tread.
- Fill the oil tank with the appointed fuel.
- Check for leakage of hydraulic oil, engine oil, fuel or coolant.
- Apply grease to where needed.
- Check for looseness of hub nuts and cylinder piston rod joints. Check the surface of piston rod for damage.
- Check mast rollers to see that they rotate smoothly.
- Fill up enough oil into the lift cylinders by lifting the lift cylinders fully.
- In winter or cold season, don't drain long-acting antifreeze, while cooling water shall be drained.

Daily storage

- Park the forklift truck at a specified place and block the wheels.
- Place the direction lever in the neutral position and apply the parking brake by depressing the parking brake pedal.
- Turn the ignition key to "OFF" position and turn off the engine, operate joystick of control valve several times to release residual pressure in the hydraulic system.
- Remove the key and keep it in a safe place.

Long-term storage

If use of the truck will be suspended for more than 2 months, it should be parked in a well-ventilated, frost-free, clean and dry place, and the following measures should be taken.

Perform the following service and checks in addition to the "Daily storage" service:

- Clean the truck thoroughly.
- Park the truck in a well-ventilated, frost-free, clean and dry place.
- Both raise and lower the fork carriage and tilt the lift mast forwards and backwards several times. If equipped with attachments, operate the attachments several times.
- Lower the fork onto a support mounting so that the lift chain does not continue to experience stress.
- Apply a light layer of oil or grease to exposed unpainted parts such as piston rods and mast rollers.
- Lubricate the truck per the scheduled maintenance procedure.
- The truck should be operated at least once a week. Check coolant level and replenish if necessary. Start the engine and warm up thoroughly. Move the truck slowly forwards and backwards. Operate the hydraulic controls several times.

⚠ CAUTION

Jack up the forklift truck so that the wheels leave the ground to avoid tyre deformation.

NOTE

Do not use plastic sheeting to cover the forklift truck because this will exacerbate condensation and aggregation.

NOTE

If the forklift truck will be out of use for a period of over 12 months, check the quality of all oils and fluids and replace when necessary. Please consult your authorised dealer for relevant information.

Start-up after storage

- Clean the truck thoroughly.
- Change the engine oil, transmission oil, and gear lubricant.
- Discharge foreign matter and water from the hydraulic reservoir and fuel tank.
- Remove the cylinder cap, the valves and the rocker shafts, check for the clearance in normal data.
- Add cooling fluid to specified level.
- Perform pre-operation checks carefully.
- Check coolant level and replenish if necessary. Start the engine and warm up thoroughly before operation.

WARNING

At any time your lift truck is found to be in need of repair, defective, or in any way unsafe, the condition should be reported to be supervisor immediately, and the truck should be taken out of service until it has been restored to safe operating condition.

Disposal of old trucks

The disposal of old trucks is regulated in directive 2000/53/EC from the European Parliament and Council.

We therefore recommend having this work carried out in an approved recycling plant. If you would like to carry out this work yourself, you must obtain approval from the relevant authorities as per articles 9, 10 and 11 of directive 75/442/EEC.

In addition, the following minimum requirements must be observed:

- The locations in which old trucks are stored before treatment must be areas suited to this task with impervious surfaces. These areas are also to be equipped with collection devices and separators for leaking fluids and degreasing cleaning materials
- The locations for treatment must be areas suited to this task with impervious surfaces. These areas must also be equipped with collection devices and separators for leaking fluids and degreasing cleaning materials. Suitable storage areas must be available for disassembled and partially oil-smeared parts, as well as for tyres including fire protection measures. Suitable storage tanks for fluids such as fuel, AdBlue® (urea solution), engine oil, hydraulic oil, cooling fluid and fluids from air conditioning systems must also be provided
- In order to dispose of harmful substances from the old trucks, the batteries and LPG container must be removed. The following must also be removed, collected and stored separately: fuel, AdBlue® (urea solution), engine oil, cooling fluid, hydraulic oil and fluids from air conditioning systems
- The following parts are to be collected separately and recycled: catalytic converters, metal components containing copper and aluminium, tyres, large plastic components (consoles, fluid containers) and glass

NOTE

The operating company is responsible for adherence to the directives as well as additional country-specific regulations.

Cleaning

Cleaning the truck

– Park the truck securely.

– Switch the electrical system off before cleaning.

⚠ WARNING

There is a risk of injury due to falling when climbing onto the truck!

When climbing onto the truck, you can get stuck or slip on components and fall. Higher points on the truck should only be accessed using the appropriate equipment.

– Strictly adhere to the following steps.

– Use only the steps provided to climb onto the truck.

– Use equipment such as stepladders or platforms to reach inaccessible areas.

Washing the truck exterior

⚠ CAUTION

There is a risk of short circuit if water penetrates the electrical system!

– Strictly adhere to the following steps.

– Prior to cleaning, switch off the power supply to the electrical system.

– Do not spray electrical components and the covers on these components directly with water.

⚠ WARNING

Failure to follow these instructions could result in damaged components!

The engine must be switched off during washing. Water should not be used to clean the area around the central electrical system; instead, only clean with a dry cloth or clean compressed air.

⚠ WARNING

Excessive water pressure or water and steam that are too hot can damage truck components.

– Strictly adhere to the following steps.

– Only use high-pressure cleaners with a maximum output power of 50 bar and at a maximum temperature of 85°C.

– When using high-pressure cleaners, make sure there is a distance of at least 20 cm between the nozzle and the object being cleaned.

– Do not aim the cleaning jet directly at adhesive labels or information signs.

⚠ DANGER

Risk of fire! Deposits/accumulations of combustible materials may ignite in the vicinity of hot components (e.g. exhaust pipes).

– Strictly adhere to the following steps.

– Regularly remove all deposits/accumulations of foreign materials in the vicinity of hot components.

– Do not place combustible materials in the engine compartment.

⚠ DANGER

Risk of fire! Flammable fluids can be ignited by hot components on the truck.

– Strictly adhere to the following steps.

– Do not use flammable fluids for cleaning.

– Observe the manufacturer's guidelines for working with cleaning materials

⚠ CAUTION

Abrasive cleaning materials can damage component surfaces!

Using abrasive cleaning materials that are unsuitable for plastics may dissolve plastic parts or make them brittle. The screen on the display operating unit may become cloudy.

– The procedures outlined below must be followed in all cases.

– Clean plastic parts only with cleaning materials intended for plastic parts.

– Observe the manufacturer's guidelines for working with cleaning materials

⚠ CAUTION

Excessive water pressure or water and steam that are too hot can damage truck components.

– The procedures outlined below must be followed in all cases.

– Clean the truck exterior with water-soluble cleaning materials and water (water jet, sponge, cloth).

– Clean all walk-in areas, the oil filling openings and their surroundings, and the lubricating nipples before lubricating.

NOTE

Please note: The more often the truck is cleaned, the more frequently it must be lubricated.

Cleaning the electrical system ▷

⚠ CAUTION

Cleaning electrical system parts with water can damage the electrical system.

– Cleaning electrical system parts with water is forbidden!

– Use dry cleaning materials in accordance with the manufacturer's specifications.

– Do not remove covers etc.

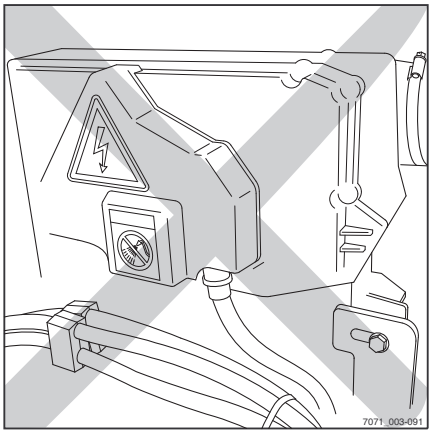

⚠ CAUTION

Possible component damage due to compressed air.

– If components are cleaned with compressed air, the air must have a maximum pressure of 0.15 bar.

This prevents liquids or small solids from being forced through slots or openings inside components and causing damage.

– Clean the electrical system parts with a metal-free brush and blow the dust off with low-pressure compressed air.

Lubricate the lift mast and chains with chain spray

▷

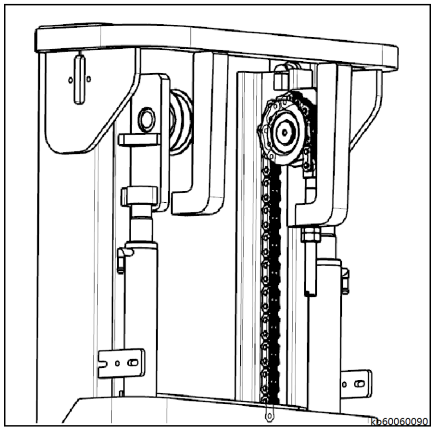

NOTE

If there is excessive dust on the chain affecting the ability of the lubricant to permeate the chain, the lifting chain must be cleaned.

– Place an oil collecting trough under the lift mast

– Carry out cleaning with an alkyl derivative such as an industrial diesel fuel cleaning agent (please comply with the manufacturer's safety instructions).

– Additives may not be used if using a steam nozzle.

– Immediately blow the chain dry after cleaning to remove water both on the chain surface and inside the hinge pins. Move the chain several times during the blow-drying process.

– Immediately apply chain spray and keep the chain moving while doing so.

NOTE

The lifting chains are a safety component. The use of cold cleaning agents, chemical cleaning agents, corrosive liquids or liquids containing acid or chlorine will cause direct damage to the chains.

⚠ CAUTION

For safety reasons, wear safety equipment while working at height.

After washing

▷

- Carefully dry the truck (e.g. with compressed air).
- Sit in the driver's seat and start up the truck in accordance with the regulations.

⚠ CAUTION

Risk of short circuits!

- If any moisture has penetrated into the electrical system despite the precautionary measures taken, the system must first be dried using compressed air.

Decommissioning

General information

This chapter contains information about "**temporary decommissioning**" and "**permanent decommissioning**".

Measures to be implemented when decommissioning

The following tasks must be carried out if the truck is not used for an extended period:

- Clean the truck as described in the chapter entitled "**Cleaning the forklift truck**" and park the truck in a dust-free, dry, frost-free and well-ventilated area.
- Lift the fork carriage to the stop several times.
- Tilt the lift mast forwards and backwards several times and, if fitted, move attachment repeatedly.
- Lower the fork carriage. To relieve the strain on the load chains, lower the fork carriage onto a suitable supporting surface, e.g. a pallet.
- Check hydraulic oil level and top up if required.
- Apply a thin layer of oil or lubricating grease to all unpainted parts as corrosion protection.
- Lubricate all lubrication points listed in the chapter entitled "**Summary table of maintenance operations**".
- Spray all exposed electrical contacts on the battery with a suitable contact spray.
- Remove the battery and store it in a dry and frost-free room.
- Regularly check the charge state of the battery and recharge if necessary.
- Jack up the truck so that the tyres are not touching the ground. This will prevent permanent deformation of the tyres.
- Fill the fuel tank.

- Preserve the engine as specified by the engine manufacturer.
- Cover the truck with a cover that is **NOT** made of plastic.
- If the truck is to be decommissioned for longer periods, contact the authorised service centre to find out about additional measures.

Recommissioning after storage

If the truck has been in storage for longer than six months, it must be carefully checked before being recommissioned. As in the annual inspection, this check should also include all safety items for the truck.

- Clean the truck thoroughly; see the chapter entitled "Cleaning".
- Oil joints and controls.
- Check battery condition and acid density; recharge if necessary.
- Restore engine to normal condition according to regulations of engine manufacturer.
- Check engine oil for condensed water and change if necessary
- Check hydraulic oil for condensation water; change if necessary.
- Carry out the checks and tasks that are to be performed before daily use.
- Put the truck into operation.

During commissioning, the following must be checked in particular:

- Drive, control, steering
- Brakes (service brake, parking brake)
- Lifting system (load-carrying equipment, load chains, mounting)

NOTE

For further information, see the truck workshop manual or contact the authorised service centre.

Permanent decommissioning (scrapping)

The forklift truck must be scrapped in compliance with local regulations. In the event of queries regarding the scrapping of forklift trucks in accordance with regulations, contact the authorised sales network or the recycling companies authorised for scrapping.

ENVIRONMENT NOTE

In particular, batteries, fluids (oils, fuels, lubricants etc.), electrical and electronic components and rubber components must be disposed of in compliance with specific local regulations for each type of material.

5

Maintenance

General information

To keep the forklift truck in a good operating condition, the repair work specified on the following pages must be carried out regularly, at the indicated intervals, and using the consumable material designed for the purpose. A written record must be kept of all work that has been carried out. This is the only way of guaranteeing validity of the warranty.

⚠ CAUTION

Any upcoming maintenance and repair work must be carried out by authorised service engineers in order to guarantee that the truck remains in a good, safe operating condition and that it fulfils all technical specifications.

⚠ CAUTION

The intervals for the various maintenance tasks to be carried out on a regular basis must be shortened accordingly if the truck is used in particularly severe conditions, such as:

- In dusty environments
- At temperatures below zero
- For particularly heavy-duty work

To determine the amended maintenance intervals, please contact your authorised service centre.

NOTE

Please contact your authorised service centre for a maintenance contract that is appropriate for your forklift truck.

Personnel qualifications

Only qualified and authorised personnel are allowed to perform maintenance work. Regular safety checks and checks after unusual incidents must be performed by a competent person. The competent person must conduct their evaluation and assessment from a safety standpoint, unaffected by operational and economic conditions. The competent person must have sufficient knowledge and experience to be able to assess the condition of a truck and the effectiveness of the protective devices in accordance with technical conventions and the principles for testing trucks.

Maintenance work without special qualifications

Simple maintenance work, such as checking the hydraulic oil level, may be carried out by untrained personnel. A qualification such as those held by a competent person is not required to carry out this work. The required tasks are described in the chapter entitled "Remaining ready for operation".

Preliminary maintenance operations

Carry out the following steps before performing maintenance operations:

- Park the truck in an area where it does not obstruct other trucks.
- Park the truck on a flat surface and secure it with wheel chocks behind the wheels to prevent it from rolling away unintentionally.
- Seal off the area where you are performing the maintenance.
- Lower the fork arms to the ground.
- Apply the parking brake.
- Turn off the forklift truck, and remove the ignition and stop key.

Preliminary maintenance operations

⚠ DANGER

Risk of severe electric shock.

Disconnect the negative connecting terminal from the battery before performing any work on the electrical system.

Scheduled truck maintenance

Maintenance — 500 hours

At operating hours										Carried out	
500		1500		2500		3500		4500			
5500		6500		7500		8500		9500		✓	✗
Chassis, bodywork and fittings											
Check the chassis for cracks											
Check the overhead guard/cab and panes of glass for damage											
Check the controls, switches and joints for damage, and apply grease and oil											
Check the driver's seat for correct function and for damage											
Check that the seat belt is in good condition and functions correctly											
Tyres and wheels											
Check that the wheels are securely attached and check the tightening torques of the wheel nuts											
Check the tyres for wear and check the air pressure if necessary											
Check the wheels for damage											
Internal combustion engine											
Change the engine oil and filter											
Check the cooling system for leaks and correct function											
Check the coolant and top up if necessary											
Replace the air filter insert											
Fuel system											
Change the fuel filter											
Check the fuel lines and clips											
Steering and steering axle											
Lubricate the rear wheel bearings											
Lubricate the steering axle and check for leaks											
Brake											
Check the oil level of the brake system											
Hydraulics											
Check hydraulic system for condition, correct function and leaks											
Lift mast											
Check load chains for damage and wear, adjust and lubricate											

At operating hours										Carried out	
500		1500		2500		3500		4500			
5500		6500		7500		8500		9500		✓	✖
Check mast bearings for damage, and lubricate. Check the tightening torque											
Check mast profiles for damage and wear. Lubricate the mast profiles											

Maintenance — 1000 hours

At operating hours										Carried out	
1000		2000		4000		5000		7000			
8000										✓	✗
Chassis, bodywork and fittings											
Check chassis for cracks											
Check overhead guard/cab and panes of glass for damage											
Check controls, switches and joints for damage, and apply grease and oil											
Check driver's seat for correct function and for damage											
Variant: Check the dual pedal for damage and correct function, and lubricate											
Check that the seat belt is in good condition and functions correctly											
Check the signal horn											
Tyres and wheels											
Check that the wheels are securely attached and check the tightening torques of the wheel nuts											
Check tyres for wear and check the air pressure if necessary											
Check wheels for damage											
Torque converter											
Change the gearbox oil for the torque converter											
Replace the gearbox oil filter for converter gear											
Drive axle											
Drive axle: Check mounting, check for leaks, and clean cooling fins											
Change the axle oil											
Internal combustion engine											
Change the engine oil and the engine oil filter											
Check the condition of the internal combustion engine (visual inspection)											
Check the exhaust system for leaks											
Adjust the valve clearance/rocker lever											
Check the cooling system for leaks and correct function											
Check the coolant and top up if necessary											
Replace the V-belt											
Replace the air filter element											
Fuel system											
Change the fuel filter											

At operating hours										Carried out	
1000		2000		4000		5000		7000			
8000										✓	✖
Check the fuel lines and clips											
Steering and steering axle											
Lubricate the rear wheel bearings											
Lubricate the steering axle and check for leaks											
Brake											
Check and adjust the service brake											
Check and adjust parking brake											
Check the oil level of the brake system											
Change the brake oil											
Electrical system											
Check the fuses											
Check lighting and indicator lights											
Check all power cable connections											
Hydraulics											
Check hydraulic system for condition, correct function and leaks											
Replace the filter cartridge for the hydraulic oil											
Check that the hydraulics blocking function (Isolation valve) is working correctly											
Change the hydraulic oil (2000 hours for the first replacement and every 2000 hours thereafter)											
Lift mast											
Check load chains for damage and wear, adjust and lubricate											
Check mast bearings for damage, and lubricate. Check the tightening torque											
Check mast profiles for damage and wear, and lubricate											
Check lift cylinders and connections for damage and leaks											
Check guide pulleys for damage and wear											
Check support rollers and chain rollers for damage and wear											
Check the play between the fork carriage stop and run-out barrier											
Check tilt cylinders and connections for damage and leaks											
Check fork carriage for damage and wear											
Check fork arm interlock for damage and that it is working correctly											
Check that there is a safety screw on the fork carriage or on the attachment											

At operating hours										Carried out	
1000		2000		4000		5000		7000			
8000										✓	✗
Check fork arms for wear and deformation											
Lubricate the rolling tracks and fork carriage runners											
Special equipment											
Heating system: Check the fresh air filter											
Heating system: Check for damage; observe the manufacturer’s maintenance instructions											
Check attachments for wear and damage; observe manufacturer's maintenance instructions											
Check trailer coupling for wear and damage; observe manufacturer's maintenance instructions											

Maintenance - 3000 hours

At operating hours										Carried out	
3000		6000		9000		12000		15000		✓	✗
Chassis, bodywork and fittings											
Check chassis for cracks											
Check overhead guard/cab and panes of glass for damage											
Check controls, switches and joints for damage, and apply grease and oil											
Check driver's seat for correct function and for damage											
Variant: Check the dual pedal for damage and correct function, and lubricate											
Check that the seat belt is in good condition and functions correctly											
Check the signal horn											
Tyres and wheels											
Check that the wheels are securely attached and check the tightening torques of the wheel nuts											
Check tyres for wear and check the air pressure if necessary											
Check wheels for damage											
Torque converter											
Change the gearbox oil for the torque converter											
Replace the gearbox oil filter for converter gear											
Drive axle											
Drive axle: Check mounting, check for leaks, and clean cooling fins											
Change the axle oil											
Internal combustion engine											
Change the engine oil and the engine oil filter											
Check the condition of the internal combustion engine (visual inspection)											
Check the exhaust system for leaks											
Adjust the valve clearance/rocker lever											
Check the cooling system for leaks and correct function											
Check the coolant and top up if necessary											
Change the coolant											
Replace the V-belt											
Replace the air filter element											
Fuel system											

At operating hours										Carried out	
3000		6000		9000		12000		15000		✓	✗
Change the fuel filter											
Check the fuel lines and clips											
Steering and steering axle											
Lubricate the rear wheel bearings											
Lubricate the steering axle and check for leaks											
Brake											
Check and adjust the service brake											
Check and adjust parking brake											
Check the oil level of the brake system											
Change the brake oil											
Electrical system											
Check the fuses											
Check lighting and indicator lights											
Check all power cable connections											
Hydraulics											
Check hydraulic system for condition, correct function and leaks											
Replace the filter cartridge for the hydraulic oil											
Check that the hydraulics blocking function (Isolation valve) is working correctly											
Lift mast											
Check load chains for damage and wear, adjust and lubricate											
Check mast bearings for damage, and lubricate. Check the tightening torque											
Check mast profiles for damage and wear, and lubricate											
Check lift cylinders and connections for damage and leaks											
Check guide pulleys for damage and wear											
Check support rollers and chain rollers for damage and wear											
Check the play between the fork carriage stop and run-out barrier											
Check tilt cylinders and connections for damage and leaks											
Check fork carriage for damage and wear											
Check fork arm interlock for damage and that it is working correctly											
Check that there is a safety screw on the fork carriage or on the attachment											
Check fork arms for wear and deformation											

At operating hours										Carried out	
3000		6000		9000		12000		15000		✓	✖
Lubricate the rolling tracks and fork carriage runners											
Special equipment											
Heating system: Check the fresh air filter											
Heating system: Check for damage; observe the manufacturer’s maintenance instructions											
Check attachments for wear and damage; observe manufacturer's maintenance instructions											
Check trailer coupling for wear and damage; observe manufacturer's maintenance instructions											

Supply table

Unit	Recommended Quantity	Operating material	Specifications
Engine	10L	Engine oil	API CJ-4 SAE 15W-40
Hydraulic transmission gear	22L	Transmission oil	Dexron III/Mobile ATF transmission oil
Hydraulic system	90L for mast below 4500mm mast	Hydraulic oil	≥-5℃:L-HM46 ≥-20℃:L-HV32(For cold storage use)
	95L for mast exceeding 4500mm mast		
Braking system	0.5L	Brake fluid	DOT-3
Bearings, lubricating grease fittings	0.1KG	Lubricating grease	NLGL- 2
Drive axle	8L	Gear oil	-15℃~+49℃: GL-5-85W/90
			-25℃~+49℃:GL-5-80W/90 (For cold storage use)
Cooling system	Radiator water tank: 10.1L	Coolant/water	The DEUTZ cooling system protection agent corresponds to quality class DEUTZ DQC CB-14.
	Reservoir box: 6.3L	Coolant/water	
Fuel	60L	Diesel	See section "Diesel fuel-Specifications"

Providing access to maintenance points

Opening the bonnet

⚠ WARNING

Risk of injury!

Switch off the engine before opening the bonnet!

⚠ CAUTION

When opening the bonnet, the driver's seat may be damaged if it is not in its forward most position.

Slide the driver's seat all the way forwards.

⚠ CAUTION

– Move the steering column (1) as far forwards as possible and secure; see section entitled "Adjusting the steering column".
– Slide the driver's seat (2) all the way forward; see section entitled "Adjustment of the driver’s seat".

▷

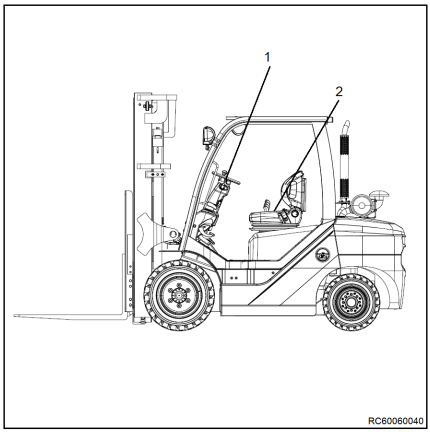

– Push the lever (3)on the engine bonnet upwards with your left hand. ▷

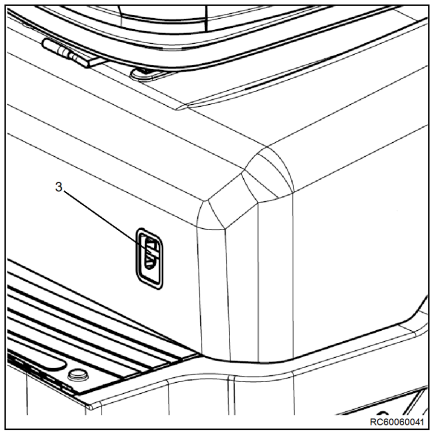

⚠ WARNING

Risk of injury from the bonnet lowering! The bonnet is fitted with a gas spring that holds the bonnet in the open position. When additional load is present, for example heavy objects, strong wind or other persons, the bonnet can lower suddenly. Cold weather and ageing can also reduce the performance of the gas spring and cause the bonnet to lower.

– If the force of the gas spring is deteriorating, replace the gas spring.
– To replace the gas spring, contact the authorised service centre.

Closing the bonnet

⚠ WARNING

When closing the bonnet, there is a risk of crushing!

When closing the bonnet, nothing must come between the bonnet and the edge of the chassis.

– Do not grasp any edges. Always close the bonnet by grasping one of the handles in each hand.

– Press the red button(4). ▷
– Pull down the bonnet until the lock audibly engages.
– Slide the driver's seat (2) all the way forward; see section entitled "Adjustment of the driver's seat".
– Move the steering column (1) as far forwards as possible and secure; see section entitled "Adjusting the steering column".

Installing and removing the bottom plate

Removing the bottom plate

⚠ CAUTION

Risk of short circuit if cables are damaged!

- Check the connection cables for damage.
- When removing and reinstalling the bottom plate, make sure that the connecting cables are not damaged.

NOTE

The bottom plate has a recess into which the operator can insert their fingers in order to lift it. The recess is beneath the rubber mat.

NOTE

The accelerator pedal is attached to the bottom plate and is removed with the bottom plate. The connecting plug for the accelerator is located underneath the bottom plate.

- Open the bonnet.
- Remove the rubber mat (1). ▷
- Raise the bottom plate slightly.
- Pull out the bottom plate under the brake pedal and set it down upright.
- Remove the floor plate and place it in a secure location.

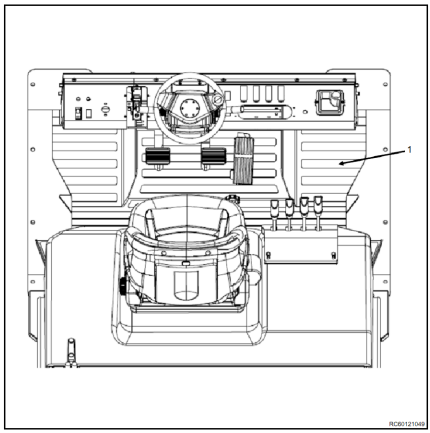

Installing the bottom plate

⚠ WARNING

Risk of crushing between the bottom plate and the frame edge!

If limbs or objects are between the bottom plate and frame edge when the bottom plate is closed, they can be crushed.

- Make sure that, when you close the bottom plate, there is nothing between the bottom plate and the frame edge.

- Set down the bottom plate upright in the foot well.
- Position the bottom plate at the front.

- Carefully guide the bottom plate down and close.
- Insert the rubber mat.
- Close the bonnet.

Maintenance service

Changing the engine oil

⚠ WARNING

Risk of burn injury!

If it is necessary to discharge the engine oil when the oil is still hot, avoid contact with the oil in order to avoid burn injuries. Wear eye protection.

Failure to comply with regulations may result in death or serious injury.

⚠ CAUTION

Use only designated oil. Other types of oil may affect quality of use and shorten the service life of the engine or internal parts.

Avoid contamination of the engine by dirt or dust. Before removing the oil cap, carefully clean the oil cap/dipstick and surrounding areas.

Avoid mixing different brands of oil. Mixing different brands of oil will seriously affect lubrication.

Avoid overfilling. Overfilling may result in white smoke, overspeed or internal damage.

⚠ CAUTION

Be environmentally responsible. Dispose of used oil in accordance with applicable laws and regulations. Failure to comply with laws and regulations will result in serious damage to the environment.

Comply with EPA guidelines or government measures for the correct handling of hazardous materials (such as oil, diesel and engine coolant). Consult the local authorities or recycling facility.

Irresponsible handling of hazardous materials, such as dumping hazardous waste into water channels, on the ground, into groundwater or drainage ditches, is prohibited.

Bleed the oil using the following steps:

- Ensure that the engine is in a level position.
- Start the engine and run until it reaches operating temperature.
- Stop the engine.

– Remove the oil filler cap (1) to ventilate the crankcase. This is beneficial for bleeding the oil.

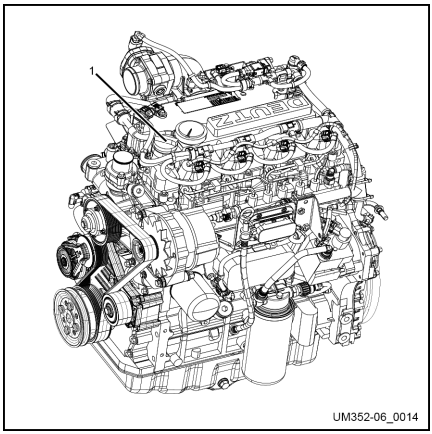

– Place an oil pan (3) under the engine to collect the used oil.

– Remove the oil drain plug (2) and allow the oil to flow into the container. When the oil has been drained completely, replace the oil drain plug (2)

Tightening torque: 14-17 ft lbs(19.6-23.5 N·m, 2.0-2.4 kgf·m).

– Dispose of the used oil properly.

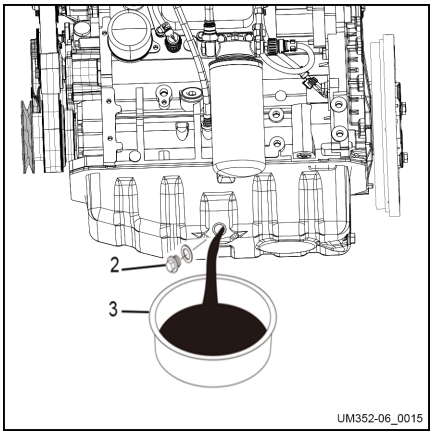

Filling up with engine oil

– Ensure that the engine is in a level position.

– Remove the oil filler cap (1).

– Add the specified amount of oil into the oil inlet on the side of the upper part of the engine.

– Wait three minutes and check the oil level.

– Add more oil as necessary.

– Replace the oil filler cap (1) and tighten by hand. Over-tightening may damage the cap.

Changing the engine oil filter

ENVIRONMENT NOTE

Be environmentally responsible. Dispose of used oil in accordance with applicable laws and regulations. Failure to comply with laws and regulations will result in serious damage to the environment.

– Rotate the engine oil filter (1) anticlockwise with a filter wrench (2). ▷

– Clean the mounting surface of the engine oil filter.

– Lightly coat the new filter sealing ring with a thin layer of engine oil.

– Hand-fit the new filter to the filter cover and turn clockwise until the mounting surface comes into contact with the surface of the filter cover; then tighten 3/4 of a turn using a filter wrench.

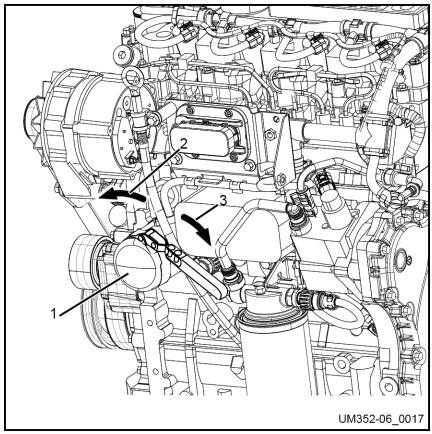

NOTE

Check the spare parts manual to find the part number of usable engine oil filters.

– Fill the engine with engine oil according to the detailed instructions in "Filling engine oil"

Changing the fuel filter cartridge

- Loosen and unscrew filter with tool. ▷
- Collect escaping fuel.
- Clean the sealing surface of the filter carrier with a clean, lint-free cloth.

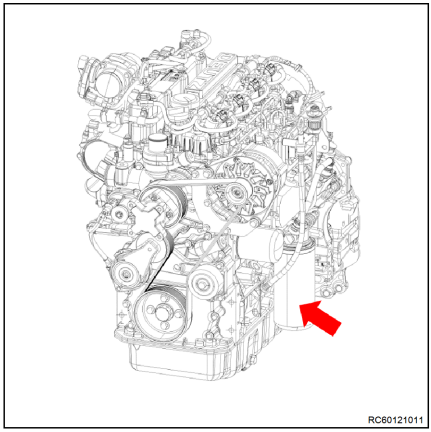

- Oil the seal of the new original spare filter lightly. ▷
- Screw on new filter by hand until the gasket is touching and tighten.

Tightening torque:

10 Nm - 12 Nm

- Vent the fuel system.

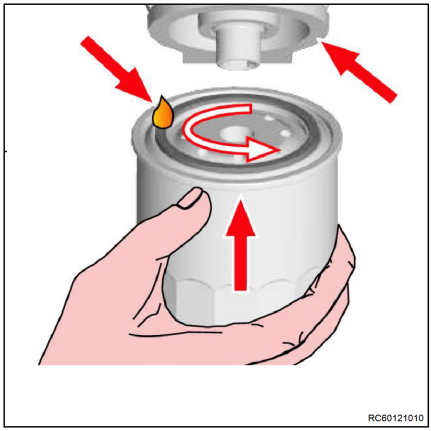

Replacing the water trap

- Turn off the engine and allow it to cool down.
- Close all oil valves.
- Disconnect the water trap sensor connector (4).
- Place a container under the water trap.

- Carefully unscrew the drain plug (3) and allow the fuel to flow out.
- Remove the water trap (2) from the mounting surface (1) by turning it to the left. Wipe up any spilled fuel.
- Put the drain plug to one side to be refitted later.
- Properly dispose of fuel, water trap and O-rings (if replaced). Follow the safety guidelines issued by the EPA or other government bodies.
- Fit the oil drainage plug (3) onto the new water trap (2) by turning it to the right and tighten by hand.

Tightening torque:

1.6Nm±0.3Nm

- Wipe clean the surface (1) of the fuel filter and apply a thin layer of diesel oil to the sealing ring of the new filter.
- Fit the new water trap(2) onto the filter cover. Turn to the right until the surface of the filter makes direct contact with the surface of the cover and tighten 1 further turn.

Tightening torque:

17Nm-18Nm

- Open all oil valves.
- Connect the water trap sensor plug.
- Vent the fuel system.
- Check the fuel filter for leaks.

▷

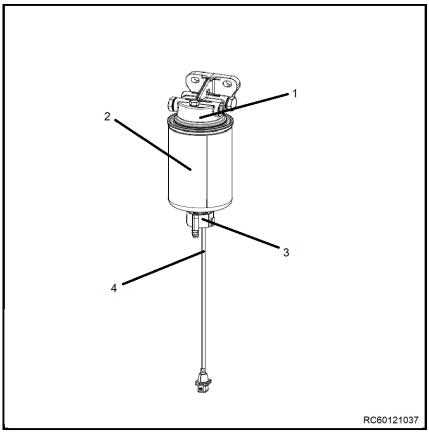

Draining water in the water trap

⚠ DANGER

Risk of fire and explosion!

Diesel fuel is highly flammable and explosive under certain conditions.

When removing and carrying out maintenance on fuel system components (such as when changing the fuel filter), place an oil pan under the engine oil port.

Avoid using workshop rags to collect fuel. Fuel is highly volatile and can easily catch fire or explode.

Wipe away droplets of fuel immediately.

Wear eye protection. The fuel system is pressurised, which means that fuel may spray out when fuel system components are removed.

Failure to comply with regulations may result in death or serious injury.

⚠ WARNING

High pressure hazard!

Avoid fuel spraying onto the skin from fuel system leakages, such as a ruptured fuel injection line. Fuel sprayed onto the skin can cause serious injury. In the event of spray injuries, seek medical attention immediately.

Do not check for fuel leaks with your hands; instead use a wooden board or cardboard. Please contact an authorised engine dealer for maintenance and repairs.

Failure to comply with regulations may result in death or serious injury.

⚠ CAUTION

If no water flows out when the fuel filter/water trap drain plug is open, loosen the air vent screw on the top of the fuel filter/water trap by turning it 2-3 turns.

This situation may occur if the fuel filter/water trap is installed in a position higher than the oil level in the oil tank. After emptying the fuel filter/water trap, make sure to tighten the air vent screw.

⚠ CAUTION

Be environmentally responsible. Dispose of used oil in accordance with applicable laws and regulations. Failure to comply with laws and regulations will result in serious damage to the environment.

Comply with EPA guidelines or government measures for the correct handling of hazardous materials (such as oil, diesel and engine coolant). Consult the local authorities or recycling facility.

Irresponsible handling of hazardous materials, such as dumping hazardous waste into water channels, on the ground, into groundwater or drainage ditches, is prohibited.

If the water separator warning light in the display illuminates before the scheduled maintenance time, this is to alert the operator that the quantity of pollutants and water has been exceeded.

The fuel filter/water trap contains a sensor that detects the quantity of water and contaminants. The sensor will transmit a signal to the alarm lamp in order to alert the operator.

Carry out the following procedure to empty the water trap:

- Place an oil pan under the water trap.
- Unfasten the drain plug (3) at the bottom of the water trap. Empty the water contained inside. ▷
- Hand-tighten the drain plug.
- When finished, make sure to fill the fuel system with diesel. See "Filling the fuel system".

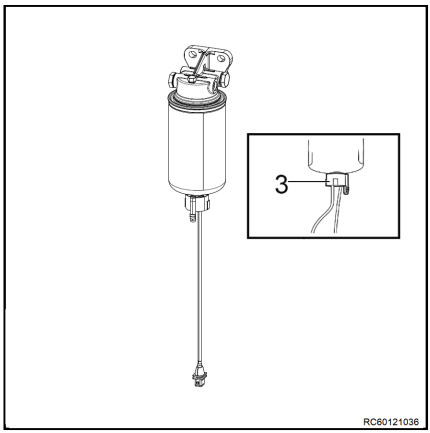

Fuel system air bleeding

⚠ WARNING

Risk of fire and explosion!

Diesel fuel is highly flammable and explosive under certain conditions.

When venting the fuel system, place an oil pan underneath the vent port. Avoid using workshop rags to collect fuel. Wipe away droplets of fuel immediately. After charging, be sure to close the air vent.

Wear eye protection. The fuel system is pressurised, which means that fuel may spray out when you open the vent port.

If the unit is equipped with an electronic fuel pump, turn the key switch to the ON position for 10-15 seconds or until fuel flows from the vent port with no air bubbles, which indicates that filling is complete.

Failure to comply with regulations may result in death or serious injury.

⚠ CAUTION

Be environmentally responsible. Dispose of used oil in accordance with applicable laws and regulations. Failure to comply with laws and regulations will result in serious damage to the environment.

Comply with EPA guidelines or government measures for the correct handling of hazardous materials (such as oil, diesel and engine coolant). Consult the local authorities or recycling facility.

Irresponsible handling of hazardous materials, such as dumping hazardous waste into water channels, on the ground, into groundwater or drainage ditches, is prohibited.

The fuel system requires air bleeding under the following circumstances:

- Before starting the engine for the first time.
- After running out of fuel and adding fuel to the tank.
- After carrying out maintenance on the fuel system, such as changing the fuel filter/water trap, or replacing fuel system components.

To vent engine fuel systems with an electronic fuel pump:

– Place an oil pan underneath the vent port.

- Loosen the vent port (2) by rotating 2-3 turns.
- Turn the key to the ON position and fill the electronic fuel pump (1) for 10-15 seconds or until fuel flows from the vent port with no air bubbles.
- Tighten the vent port.
- Wipe away splashes and handle fuel properly.
- Do not vent the fuel system by using the starter motor to rotate the crankshaft. Doing so may overheat the starter motor and damage the coil, pinion and/or ring gear.

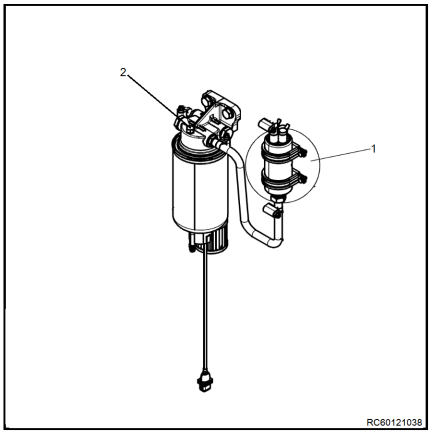

Changing the coolant

⚠ DANGER

Risk of burn injury!

Do not open the radiator cap when the engine is at working temperature. Steam and hot engine coolant will spurt out and cause serious burns. Allow the engine to cool down before you attempt to remove the radiator cap. Securely tighten the radiator cap after you check the radiator. Steam can spurt out during engine operation if the cap is loose.

Failure to comply with the above operating guidance may result in death or serious injury.

⚠ CAUTION

Risk of freezing injury!

Wear eye protection and rubber gloves when handling long-life or extended-life engine coolant. If contact with the eyes or skin should occur, flush eyes and wash immediately with clean water.

Failure to comply may result in injury.

ENVIRONMENT NOTE

Be environmentally responsible. Please follow this procedure to dispose of hazardous waste. Failure to follow this procedure will severely damage the environment.

- *Handle hazardous waste such as engine oil, diesel or engine coolant appropriately according to guidelines from the Environmental Protection Agency or other government organizations. Consult the local authorities or recycling facility.*
- *Irresponsible handling of hazardous materials, such as dumping hazardous waste into water channels, on the ground, into groundwater or drainage ditches, is prohibited.*

NOTE

Engine coolant contaminated with rust or scale reduces the cooling effect. Even when extended-life engine coolant is properly mixed, the engine coolant becomes contaminated as its ingredients deteriorate. Drain, flush and refill the cooling system with new coolant every 4000 hours or every two years, whichever comes first.

– Remove the radiator cap (1). ▷

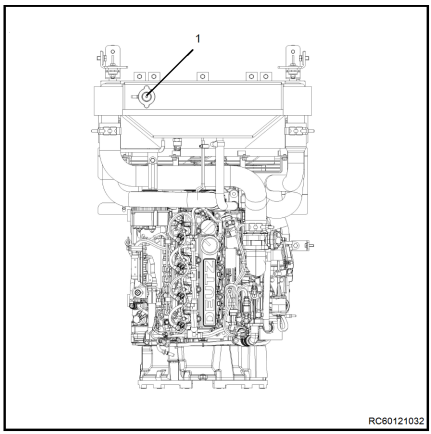

– Open the drain plug (2) on the engine block and drain the coolant. ▷

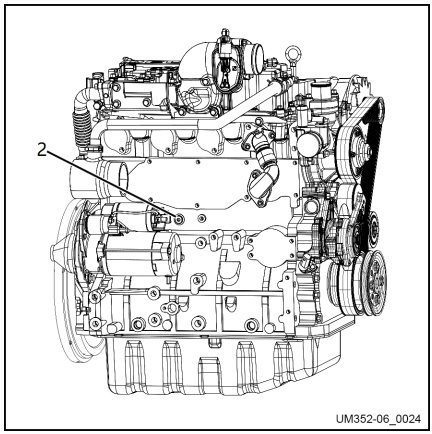

– After draining the engine coolant, flush the radiator and engine block to remove any rust, scale and contaminants. Reinstall and tighten the engine block drain plug.

– Fill the radiator with engine coolant.

Filling the radiator with coolant

Follow the procedure below to fill the radiator with engine coolant. This procedure applies when filling the radiator for the first time or when refilling it after flushing.

– Check to ensure that the engine cylinder block drain plug (2) has been tightened.

Tightening torque: 26Nm

– Open the radiator cap (1).

– Slowly pour the engine coolant into the radiator, then reinstall the cap.

– Start the engine and run until it reaches operating temperature.

– Shut down engine.

– Check coolant level in the cooled engine and top up if necessary.

Checking the V-belt tensioning

Belt Tension

Tension needs not be adjusted separately since an auto tensioner is applied that automatically controls the tension of the belt.

- A daily check is required to see if the pointer of the auto tensioner indicates that it needs to be replaced. If so, the belt must be replaced with a new one.
- The belt shall also be replaced in case it is damaged or worn out due to other external causes. It is required to check if the micro V belt has any issues associated with crack, oiling, overheating, or abrasion.
- Tension needs not be measured separately since an auto tensioner is applied that automatically controls the tension of the belt. If necessary, tension measurement shall

be conducted as chapter entitled “Tension measurement

- The fixed lower part of the auto tensioner has a minimum/maximum indicator.
- If the indicator is found to be beyond the minimum/maximum range upon visual inspection, the belt layout components must be checked.

Tension measurement

– Lower indicator arm (1) into the measuring device.

– Place guide (3) between two belt pulleys on the V-belt (2). The stop must be at the side.

– Press the button (4) at right angles to the V-belt (2) evenly until you hear or feel the spring snap in.

– Lift the measuring device carefully without altering the position of the indicator arm (1).

– Read the measured value at the point of intersection (arrow), scale (5)and indicator arm (1).

– Retighten and repeat the measurement if necessary.

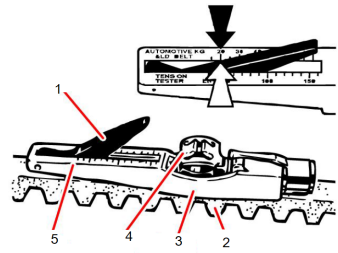

RC60121014

Replacing the V-belt

– Press tensioning roller with socket wrench in the direction of the arrow until a retaining pin can be fixed in the assembly bore. The V-ribbed belt is now tension free

– First pull the V-ribbed belt off the smallest roller or off the tensioning roller.

– Mount new V-ribbed belt.

– Retain tensioning pulley (1) using the pin wrench and remove the holding pin.

– Tension V-ribbed belt using the tensioning roller and socket wrench. Check whether the V-ribbed belt is correctly in its guide.

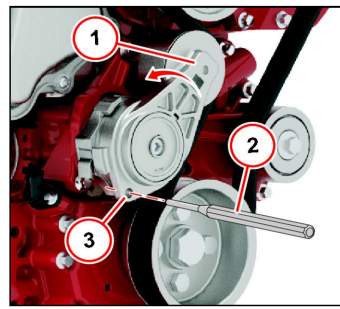

RC60121015

1 Tension pulley
2 Retaining pin
3 Assembly bore

Cleaning the air filter

Clogged filter inserts may have an adverse impact on engine performance. Make sure to periodically clean the air filter insert.

– Open the buckle(1) and remove the air filter head cover(2). ▷

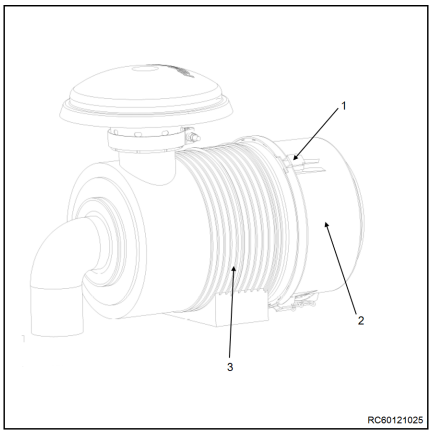

– Pull out the outer air filter(4). ▷

– Remove dust from the filter by blowing outward through the outer filter using compressed air(5). Remove dust using minimum air pressure in order to avoiding damaging the insert.

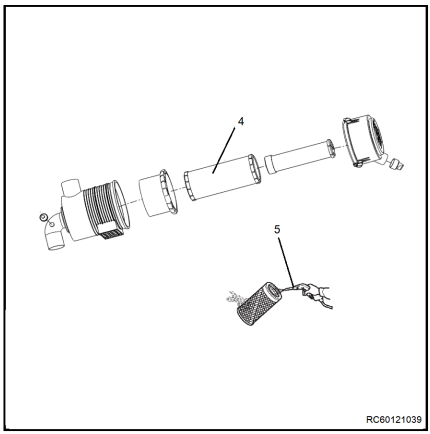

⚠ CAUTION

Flying object hazard!

Wear eye protection when carrying out maintenance on the engine and using compressed air or pressurised water jets, in order to prevent dust, flying debris, compressed air or pressurised water or gas from damaging your eyes.

Failure to follow this instruction may result in injury.

– Clean the air filter element.

– If the filter insert is damaged, heavily soiled or oily, replace it with a new insert.

⚠ CAUTION

The air filter insert requires more frequent cleaning when the engine is running in dusty environments.

– Clean the inside of the air filter head cover(2).
– Fit the filter(4)in the air filter housing(3).
– Refit the air filter cover, and tighten the air filter head cover onto the air filter housing.

Changing the air filter

– Open the buckle(1) and remove the air filter head cover(2). ▷

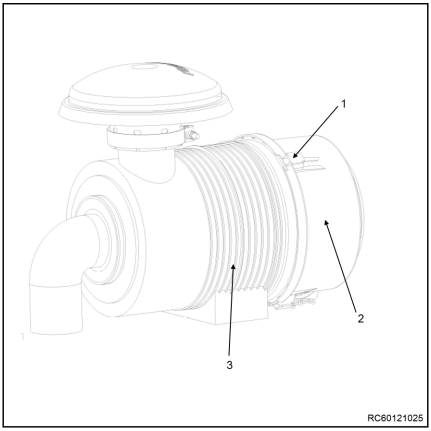

– Pull out the outer air filter(4) and inner filter insert (5) in sequence. ▷

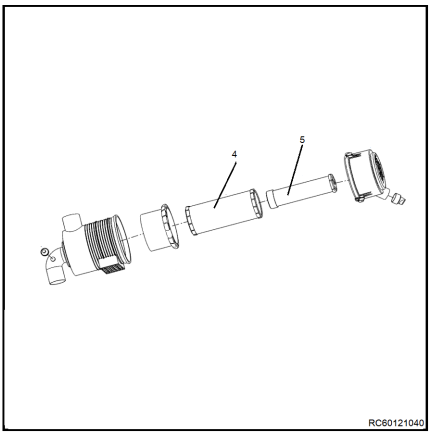

NOTE

Thoroughly clean the inside of the filter casing. Do not use compressed air to clean the filter casing.

– Ensure that the filter is not damaged during installation and that it is installed in the correct direction.
– Install the outer air filter (4) and inner air filter insert (5) back into the air filter housing(3).
– Reinstall the air filter head cover.
– Disconnect the inlet hose form the air inlet.
– When the engine is running, cover the intake opening (e.g. using cardboard or a metal plate). The air filter blockage warning light in the display should light up. To prevent damage, do not continue to block the

intake opening after the warning light illuminates.

Changing the hydraulic transmission crude oil filter

ENVIRONMENT NOTE

Please follow the instructions for disposal of fluids and lubricants.

NOTE

Place a container under the crude oil filter to collect oil flowing out of the transmission.

- Remove the floor plate.
- Unscrew the fastening screws and washers on the crude oil filter.
- Slowly pull out the crude oil filter so that the oil flows into the container.
- Unscrew the crude oil filter from the oil filter seat.
- Unscrew the fastening nut on the crude oil filter; then remove the filter insert. ▷
- Replace it with a new crude oil filter insert. Fit the filter insert followed by the bottom cover onto the filter spindle; then tighten the nut.
- Refit the crude oil filter to the gearbox using the fastening screws.
- Refit the floor plate.

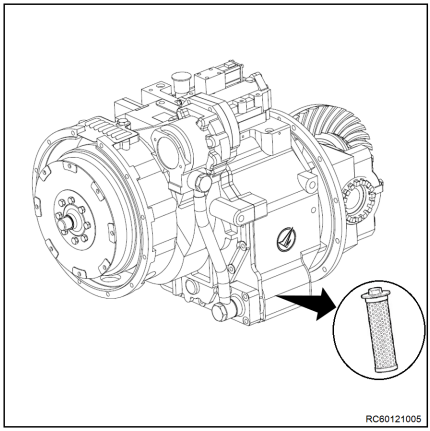

Changing the oil of the hydraulic transmission ▷

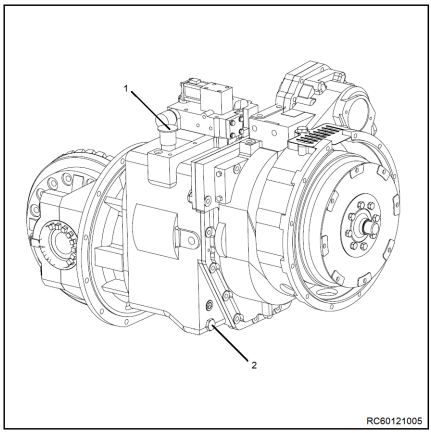

ENVIRONMENT NOTE

Observe precautions for handling fuel and lubricants.

- Place a container under the right side of the truck chassis.
- Remove the floor plate.
- Unscrew the oil drain plug (2).
- Fully drain the oil of the gearbox transmission gear.
- Wipe the drain plug area clean.
- Refit the drain plug and washer.

ENVIRONMENT NOTE

Properly dispose of the waste hydraulic oil.

- Unscrew the filler cap (1).
- Add transmission oil through a filler pipe.
- Use the dipstick to check the transmission oil level, which should reach the upper mark on the dipstick.
- Reinstall the floor plate.
- Start the engine and run it in neutral for a while. After the engine stops running, recheck the oil level, which should be between the upper and lower marks on the dipstick. Also check the leak resistance of the oil tank.

NOTE

The filler cap also functions as a vent cap.

Wheel replacement procedure

Rear wheel replacement procedure

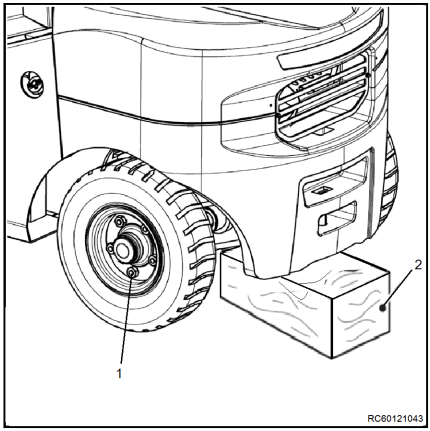

- Turn off the truck and perform the preliminary maintenance operations.
- Partially loosen the wheel fastening nuts (1).
- Raise the back of the truck by jack and arrange supports (2) under the ballast.
- Lower the truck so that it rests on the supports.
- Completely unscrew the nuts (1) and pull off the wheel.
- Fit the new wheel, positioning it in such a way that any inflation valve is always on the outside.
- Tighten the fastening nuts, following the three-stage sequence indicated in the relevant paragraph:
- Tighten the nuts slightly so that the wheel rests well on the hub.
- Tighten the nuts to 50% of the prescribed torque.
- Raise the truck to free the supports.
- Remove the supports.
- Lower the truck to the ground.
- Tighten the wheel nuts to full torque (see corresponding paragraph).
- When changing wheels with tyres, inflate to the prescribed pressure.

Front wheel change

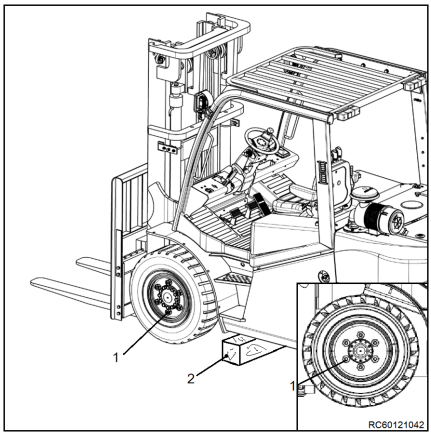

- Lift the fork arms to at least 1 m above the ground.
- Turn off the truck and perform the preliminary maintenance operations.
- Partially loosen the wheel fastening nuts (1).
- Insert a jack under the fixed stand of the lift or under the chassis frame on the side where the wheel is to be replaced.
- Block the rear wheels with wedges in order to avoid accidental movements of the truck in the reverse direction.
- Lift the front end of the truck with the jack and arrange supports (2) on the side of the wheel to be replaced.
- Lower the truck resting it on stable and solid supports (2) . Be careful not to rest it on the cylinder feed pipes.
- Completely unscrew the nuts (1) and pull off the wheel.
- Fit the new wheel, positioning it in such a way that any inflation valve is always on the outside.
- Tighten the fastening nuts, following the three-stage sequence indicated in the relevant paragraph:
- Tighten the nuts slightly so that the wheel rests well on the hub.
- Tighten the nuts to 50% of the prescribed torque.
- Raise the truck off the supports (2) .
- Remove the supports (2) .
- Lower the truck to the ground.
- Tighten the wheel nuts to full torque (see corresponding paragraph).
- When changing wheels with tyres, inflate to the prescribed pressure.

Checking the drive axle gearbox oil ▷

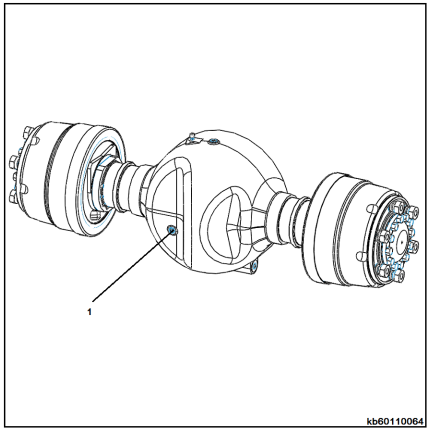

- Unscrew the oil plug at the oil level aperture(1).
- Check the gear shaft oil level to ensure it is near the observation aperture position(around 15mm).
- If necessary, fill the gearbox with gear oil until oil flows out of the oil level aperture.

NOTE

Please refer to the chapter on replacing the drive axle gearbox oil for steps to take when adding gear oil.

Fill up the hydraulic oil

- Unscrew the oil cap (1)assembly. ▷
- Fill up with hydraulic oil through the oil inlet:

90L for mast below 4500mm mast

95L for mast exceeding 4500mm mast

- Use the dipstick to check the oil level. The oil level should reach the upper marking on the dipstick.
- Close the bonnet.
- Start the engine and run it for a while. Check the oil level again. Check the seals.

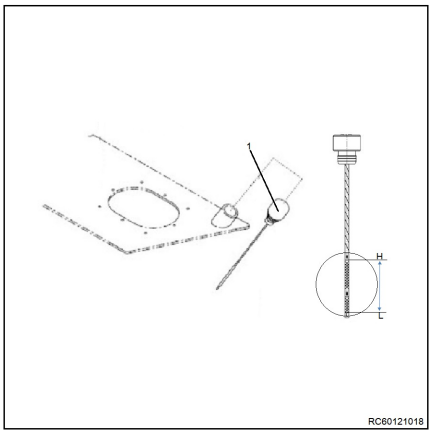

Changing the suction filter and return filter

ENVIRONMENT NOTE

Please follow the instructions for disposal of fluids and lubricants.

NOTE

The hydraulic oil will flow out. Place an oil pan under the filter.

– Open the engine cover.
– Remove the pedal pad and bracket.
– Slacken off the fastening bolts and washers on the cover assembly, then remove the cover assembly.
– Slowly pull out the cover assembly so that the oil flows back into the tank.
– Unscrew the suction filter (2) and return filter (3) from the cover assembly. ▷
– Screw in the new intake filter until tightened.
– Refit the cover assembly to the frame using the fastening screws.
– Refit the bracket and pedal pad.
– Refit the engine cover.

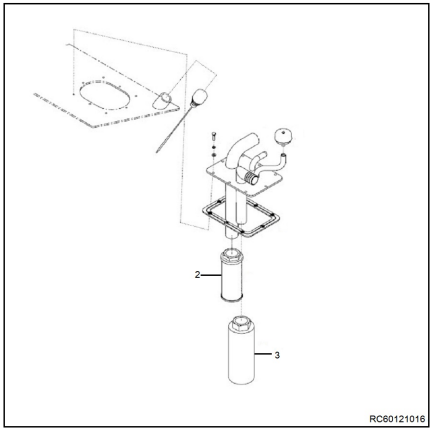

Replacing the breather filter

ENVIRONMENT NOTE

Please handle liquids and lubricating oil in accordance with instructions.

– Open the bonnet.

– Unscrew the breather filter (1) and dipstick and remove.
– Remove the dipstick and balls on the dipstick base from the breather filter and mount onto the new the breather filter.
– Screw the breather filter and dipstick back into position.
– Close the bonnet.

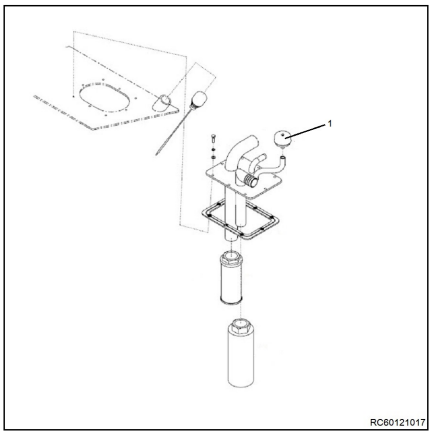

NOTE

Respirators may need to be replaced more frequently in dusty environments.

Removing the forks

WARNING

Manual handling risk. The forks are heavy.

Care should be taken when removing the forks.

– Apply parking brake.
– Tilt the mast fully forward and lower the forks to approximately 150 mm from the ground.
– Remove the fork carriage centre stop bolt.
– Release the fork latch (1) and slide fork to centre groove of carriage.
– Carefully lower the fork onto suitable wooden pallet, make sure it detaches from the top of the carriage plate.
– Release the parking brake and drive truck slowly away from the fork, first ensuring that it is clear of the fork carriage.
– Repeat procedure for the other fork.

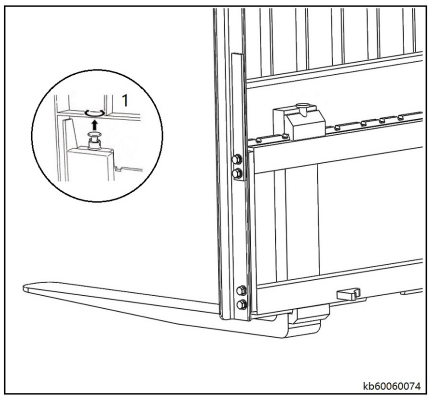

NOTE

It will assist with sliding the forks along the carriage, to lightly grease its top and bottom faces.

Fitting the forks

- Loosen the centre stop bolt.
- Tilt the mast forward until the fork is attached to the centre groove of the carriage.
- Apply the parking brake.
- Tilt back the mast and raise the fork carriage slowly with the fork located on the carriage.
- Ensure that it is secured before sliding it along the carriage.
- Release the fork latch (1) and slide the fork to the required position. ▷
- Refit the knob by engaging it in one of the notches on the fork carriage.
- Repeat the operation for the other fork and fit the centre stop bolt.

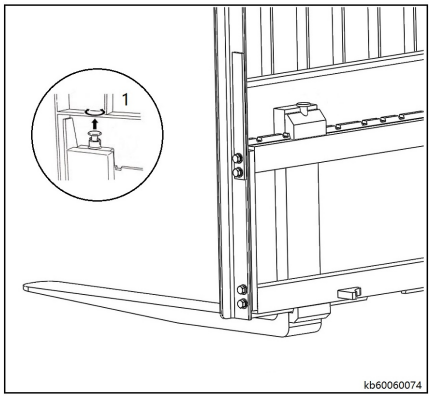

NOTE

The forks must be equidistant from the centre-line of the fork carriage.

Checking the fork arms for wear and deformation

CAUTION

The fork arm check must be carried out thoroughly by expert personnel, in order to detect all damage, breakage, deformation, etc., which could reduce safety in use.

- Check the thickness of the fork arm blade at a point between the end of the taper and heel of the fork arm.
- Measure the sample section (ZC) as indicated in the drawing and compare it with sections A, B, C. Maximum wear permitted at points A, B, C, is 10% compared with the sample section.

The forks should be withdrawn from service if the blade has been worn to 90% of it's original thickness.

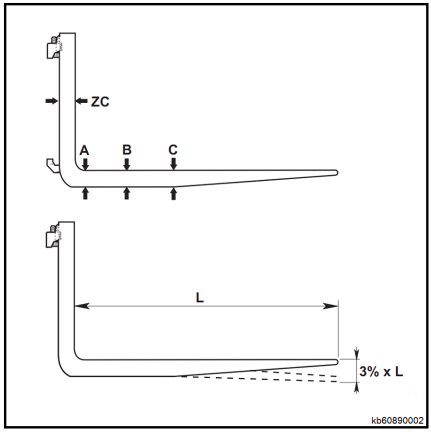

NOTE

The shank of the fork can be used as a guide to it's original thickness. It is advisable to use a wear gauge to assist in this measurement.

- With the fork arms mounted on the plate in the working position, check that the height difference of the tips is not greater than 3% of the length of the same. E.g.: length (L) cm 120 = (120 x 3/100) = 3.6cm.
- Visually check that there are no cracks on the fork arms, especially in the fork heel and attachment areas. In case of doubt, check using a dye penetrant test.
- Replace damaged parts if necessary.

Checking the operation and installation of the lift mast, lifting chain and limit block

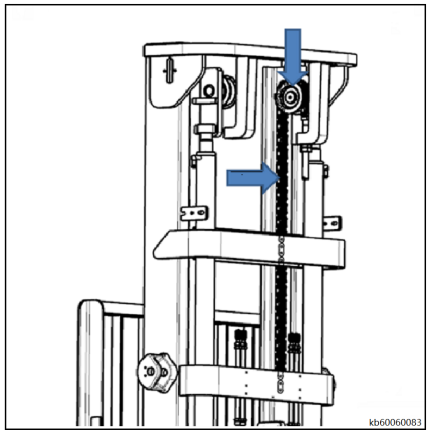

- Clean the mast channel and lifting chains.
- Check the working status of the lifting chains, along with any signs of abrasion, paying particular attention to the area around the chain wheels.
- Check that the chain fixed pins are secure.
- Replace damaged lifting chains.
- Check the status and tightness of the lift mast column, mast channel surfaces and roller.
- Check the status and working condition of the limit block.

– Check the tightness of the elastic retaining rings at the piston rod connections on top of the lift mast.

Lubricate the lift mast and chains with chain spray

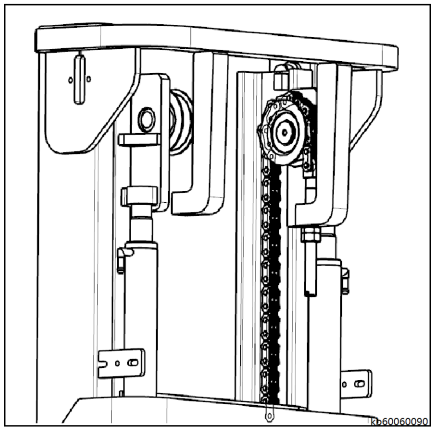

NOTE

If there is excessive dust on the chain affecting the ability of the lubricant to permeate the chain, the lifting chain must be cleaned.

– Place an oil collecting trough under the lift mast

– Carry out cleaning with an alkyl derivative such as an industrial diesel fuel cleaning agent (please comply with the manufacturer's safety instructions).

– Additives may not be used if using a steam nozzle.

– Immediately blow the chain dry after cleaning to remove water both on the chain surface and inside the hinge pins. Move the chain several times during the blow-drying process.

– Immediately apply chain spray and keep the chain moving while doing so.

NOTE

The lifting chains are a safety component. The use of cold cleaning agents, chemical cleaning agents, corrosive liquids or liquids containing acid or chlorine will cause direct damage to the chains.

⚠ CAUTION

For safety reasons, wear safety equipment while working at height.

Lubricating the lift mast and tilt cylinder bearings

NOTE

Lubricate using lubricating grease only.

– Lower the fork carriage fully.

– Using lubricating grease, lubricate the grease nipples (1)on the left and right tilt cylinder pivots at the drive axle from above. ▷

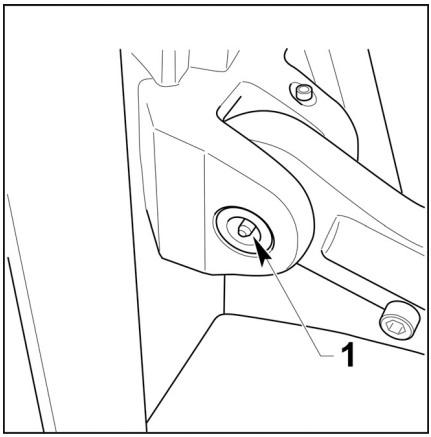

– Using lubricating grease, lubricate the grease nipples (2)on the left and right tilt cylinder pivots at the chassis from above. ▷

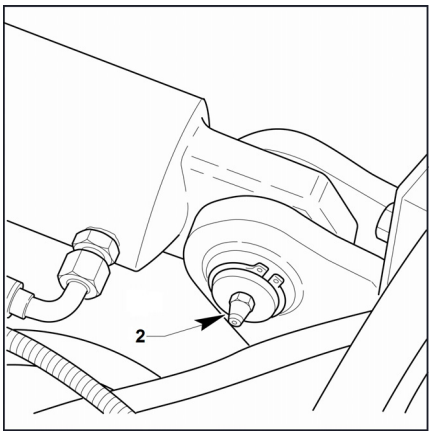

– Inject grease into the lift mast grease nozzles on the left and right sides of the frame (3).

– Lubricate using a grease gun until fresh grease comes out of the bearings.

– Refit the floor plate and then the engine cover.

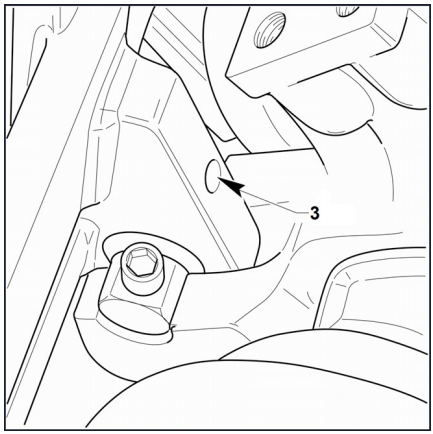

Adjusting the length of the lift chains, and lubricating using chain spray

Adjusting the length of the lift chains*

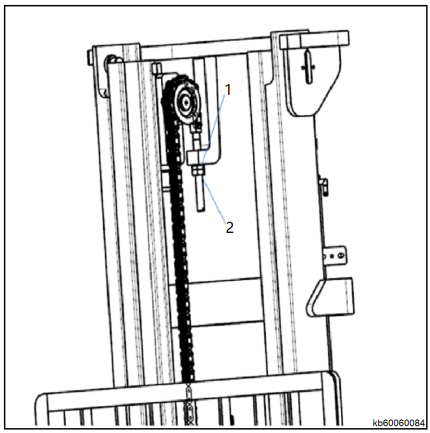

NOTE

As lift chains stretch with use, they must be adjusted, both on the left and right hand side.

– Completely lower the mast.

– Loosen the locknut (2).

– Adjust chain length with the adjusting nut (1) at the chain anchor.

NOTE

While the mast is in vertical position, and the forks is lowered to the ground, ensure the lifting chain is in tight state. If not, adjust it until rectified.

– Tighten the locknut (2).

– Also adjust the second chain.

* Standard mast only

⚠ CAUTION

For safety reasons, wear safety equipment while working at height.

Adjusting the length of the lift chains* ▷

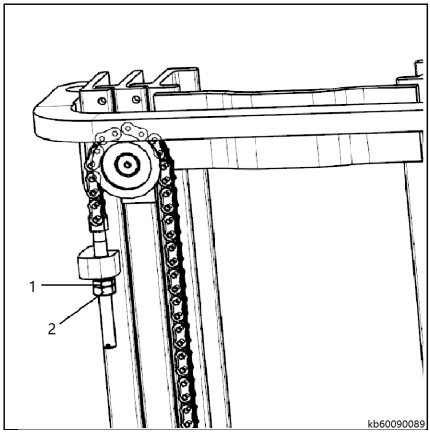

NOTE

Use over time will cause the lift chains to stretch, therefore it is necessary to check and adjust their lengths.

– Completely lower the mast.

– Loosen the locknut (2).

– Adjust chain length with the adjusting nut (1) at the chain anchor.

NOTE

While the mast is in vertical position, and the forks is lowered to the ground, ensure the lifting chain is in tight state. If not, adjust it until rectified.

– Tighten the locknut (2).

* Completely free lifting and triplex masts only

⚠ CAUTION

For safety reasons, wear safety equipment while working at height.

Lubricating the chains with chain spray

– Use specified chain spray to coat the chains and channel surfaces.

NOTE

If the truck is used in the food industry, please use lubricating grease in place of spray.

Checking the structure of the overhead guard

NOTE

Modification in overhead guard is not allowed without getting the approval from the manufacturer.

Check the structure of the overhead guard for no damage and transparent material forms the part of the overhead guard structure shall not exceed 20 mm vertical deformation. Otherwise it shall be replaced accordingly. The replacement shall be done by authorized service.

6

Technical datasheet

Dimensions

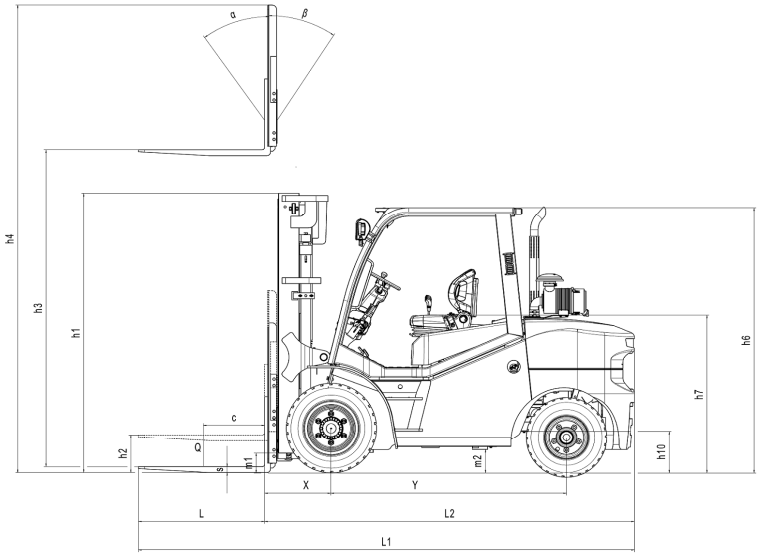
α
β
h4
h3
h1
h2
c
Q
s
m1
X
Y
m2
L
L2
L1
h7
h6
h10

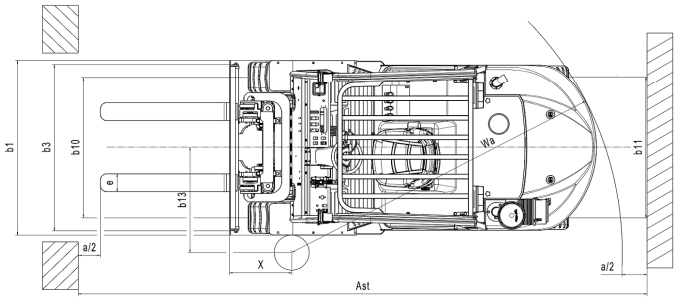
b1
b3
b10
e
b13
a/2
X
Ast
Wa
b11
a/2

VDI Datasheet for RCD40

NOTE

This VDI data sheet specifies only the technical values of the truck version with standard equipment. Different tyres, lift masts, additional units etc. may produce different values.

Characteristics		
Manufacturer		STILL
Model		RCD40
Power type : Electric-Diesel-Petrol-LPG-Network Power (Electric)		Diesel
Operation Type:Hand-stand on-Driver seated		Seated
Load Capacity	Q (kg)	4000
Load centre of gravity distance	c (mm)	500
Axle centre to fork face	x (mm)	562
Wheel Base	y (mm)	2000
Weights		
Service Weight	Kg	6800
Axle loading, laden front/rear	Kg	9627/1243
Axle loading, unladen front/rear	Kg	2731/3676
Wheels, chassis frame		
Tyres:SE-Super elastic PN-Pneumatic		SE
Front Tyres Size		300-15/20PR
Rear Tyres Size		7.00-12/12PR
Front Track Width	b10 [mm]	1180
Rear Track Width	b11 [mm]	1190
Dimension and overall sizes		
Mast lift, forward/backward	α/β	6°/12°
Mast Minimum Overall Height	h1 [mm]	2390
Free lift	h2 [mm]	150
Lift height	h3 [mm]	3000
Mast Maximum Overall Height	h4 [mm]	4275
Overhead Guard Height	h6 [mm]	2260
Seat Height relating to SIP/standard height	h7 [mm]	1315
Drawbar Height	h10 [mm]	380
Overall Length	l1 (mm)	4180
Lenght to Face of Forks	l2 (mm)	3110
Overall Width	b1 [mm]	1485
Fork Arm Dimensions	s/e/l (mm)	50/150/1070

Fork Carriage in Compliance with ISO 2328 Class/Form A,B		III A
Fork Carriage Width	b3 (mm)	1380
Ground Clearance below Mast(laden)	m1 (mm)	145
Ground Clearance at Centre of Wheelbase(laden)	m2 (mm)	180
Working aisle width with pallet 1000 x 1200 cross-ways****	Ast (mm)	4552
Working aisle width with pallet 800 x 1200 crossways****	Ast (mm)	4752
Turning Radius	Wa (mm)	2790
Turning Point Minimum Distance from the Truck Center Line	b13 (mm)	900
Performance data		
Driving speed (with/without load)	km/h	24/25
Lifting speed (with/without load)	m/s	0.44/0.53
Lowering speed (with/without load)	m/s	0.42/0.29
Drawbar Pull Tractive Effort (at 2km/h) with/without load	KN	25/23
Gradeability (at 2km/h) laden/unladen	%	20
Service Brake		Mechanical/Hydraulic
Engine		
Engine Type		Deutz TCD2.9 L4
Engine Power in compliance with ISO 1585	kW	55.4
Rated Number of Revolutions	rpm	2300
Cylinder Number/Displacement	cm^3	4/2900
On-board voltage		12
Others		
Drive Control Type		Hydraulic torque con-verter
Volume fuel tank	L/Kg	90/75
Towing coupling, type DIN		PIN

VDI Datasheet for RCD50

Characteristics		
Manufacturer		STILL
Model		RCD50
Power type : Electric-Diesel-Petrol-LPG-Network Power (Electric)		Diesel
Operation Type:Hand-stand on-Driver seated		Seated
Load Capacity	Q (kg)	5000
Load centre of gravity distance	c (mm)	500
Axle centre to fork face	x (mm)	567
Wheel Base	y (mm)	2000
Weights		
Service Weight	Kg	7340
Axle loading, laden front/rear	Kg	11000/1420
Axle loading, unladen front/rear	Kg	3120/4200
Wheels, chassis frame		
Tyres:SE-Super elastic PN-Pneumatic		SE
Front Tyres Size		300-15-20PR
Rear Tyres Size		7.00-12-12PR
Front Track Width	b10 [mm]	Diesel
Rear Track Width	b11 [mm]	Seated
Dimension and overall sizes		
Mast lift, forward/backward	α/β	6°/12°
Mast Minimum Overall Height	h1 mm]	2390
Free lift	h2 [mm]	150
Lift height	h3 mm]	3000
Mast Maximum Overall Height	h4 mm]	4275
Overhead Guard Height	h6 mm]	2260
Seat Height	h7 mm]	1315
Drawbar Height	h10 mm]	380
Overall Length	l1 (mm)	4230
Lenght to Face of Forks	l2 (mm)	3160
Overall Width	b1 [mm]	1485
Fork Arm Dimensions	s/e/l mm)	50/150/1070
Fork Carriage in Compliance with ISO 2328 Class/Form A,B		III A
Fork Carriage Width	b3 (mm)	1380
Ground Clearance below Mast(laden)	m1 (mm)	145
Ground Clearance at Centre of Wheelbase(laden)	m2 (mm)	180
Working aisle width with pallet 1000 x 1200 crossways****	Ast mm)	4597
Working aisle width with pallet 800x1200 crossways****	Ast mm)	4797

Turning Radius	Wa (mm)	2830
Turning Point Minimum Distance from the Truck Center Line	b13 (mm)	900
Performance data		
Driving speed (with/without load)	km/h	24/25
Lifting speed (with/without load)	m/s	0.44/0.53
Lowering speed (with/without load)	m/s	0.44/0.53
Drawbar Pull Tractive Effort (at 2km/h) with/without load	KN	25/23
Gradeability (at 2km/h) laden/unladen	%	20
Service Brake		Mechanical/Hydraulic
Engine		
Engine Type		Deutz TCD2.9 L4
Engine Power in compliance with ISO 1585	kW	55.4
Rated Number of Revolutions	rpm	2300
Cylinder Number/Displacement	cm^3	4/2900
On-board voltage		12
Others		
Drive Control Type		Hydraulic torque converter
Volume fuel tank	L/Kg	90/75
Towing coupling, type DIN		PIN

Mast specification

NOTE

This data would be changed under different working condition.

4T MAST SPECIFICATIONS

Mast type	Max. height	Rated capacity load center 500mm		height		free-lift height		mast angle
		4T	double tyres	closed height	height with carriage	without carriage	with carriage	front/ back
VM Standard wide-view	3000	4000	4000	2390	4275	150	150	6/12
	3300	4000	4000	2540	4575	150	150	
	3500	4000	4000	2640	4775	150	150	
	4000	4000	4000	2940	5275	150	150	6/6
	4500	4000	4000	3190	5775	150	150	
	5000	4000	4000	3440	6275	150	150	
VFM Full free duplex	3000	4000	4000	2390	4275	1544	1165	6/12
	3300	4000	4000	2540	4575	1694	1315	
	3500	4000	4000	2640	4775	1794	1415	
	4000	4000	4000	2890	5275	2044	1665	6/6
VFHM Full free triplex	3620	4000	4000	2145	4895	1299	920	6/6
	3920	4000	4000	2245	5195	1399	1020	
	4350	4000	4000	2390	5625	1544	1165	
	4500	4000	4000	2441	5775	1595	1216	
	4700	4000	4000	2507	5975	1661	1282	
	4800	4000	4000	2540	6075	1694	1315	
	5000	4000	4000	2640	6275	1794	1415	
	5400	4000	4000	2765	6675	1919	1540	3/6
	5500	4000	4000	2807	6775	1961	1582	
	6000	3480	4000	3005	7275	2159	1780	
	6200	3250	3750	3093	7475	2247	1868	

5T MAST SPECIFICATIONS

Mast type	Max. height	Rated capacity load center 500mm		height		free-lift height		mast angle
		5T	double tyres	closed height	height with carriage	without carriage	with carriage	front/ back
VM Standard wide-view	3000	5000	5000	2390	4275	150	150	6/12
	3300	5000	5000	2540	4575	150	150	
	3500	5000	5000	2640	4775	150	150	
	4000	5000	5000	2940	5275	150	150	6/6
	4500	5000	5000	3190	5775	150	150	
	5000	5000	5000	3440	6275	150	150	
VFM Full free duplex	3000	5000	5000	2390	4275	1544	1165	6/12
	3300	5000	5000	2540	4575	1694	1315	
	3500	5000	5000	2640	4775	1794	1415	
	4000	5000	5000	2890	5275	2044	1665	6/6
VFHM Full free triplex	3620	5000	5000	2145	4895	1299	920	6/6
	3920	5000	5000	2245	5195	1399	1020	
	4350	5000	5000	2390	5625	1544	1165	
	4500	5000	5000	2441	5775	1595	1216	
	4700	5000	5000	2507	5975	1661	1282	
	4800	5000	5000	2540	6075	1694	1315	
	5000	5000	5000	2640	6275	1794	1415	
	5400	5000	5000	2765	6675	1919	1540	3/6
	5500	5000	5000	2807	6775	1961	1582	
	6000	4480	5000	3005	7275	2159	1780	
	6200	4250	4750	3093	7475	2247	1868	

Numbers and Symbols

4T MAST SPECIFICATIONS. 177
5T MAST SPECIFICATIONS. 178

A

Additional capacity rating plate for attachments. 33
Address of manufacturer and contact details. I
Adjusting the length of the lift chains, and lubricating using chain spray. 167
Adjusting the position of steering wheel. . 73
Adjusting the seat and seat belt. 65
After washing. 120
Attachments
Fitting. 31
Hydraulic connection. 31
Mechanical connection. 31

B

Battery acid. 27
Before lifting a load. 92
Belt Tension. 152
Brake diagram. 190

C

Capacity plate. 91
Changing direction of travel. 84
Changing the air filter. 155
Changing the coolant. 150
Changing the engine oil. 142
Changing the engine oil filter. 144
Changing the fuel filter cartridge. 145
Changing the hydraulic transmission crude oil filter. 156
Changing the oil of the hydraulic transmission. 157
Changing the suction filter and return filter. 160
Checking condition and performance. . . . 64
Checking the coolant level. 57
Checking the drive axle gearbox oil. . 60, 160
Checking the engine oil level. 59
Checking the fork arms for wear and deformation. 163
Checking the hydraulic oil level. 61
Checking the operation and installation of the lift mast, lifting chain and limit block. 164
Checking the structure of the overhead guard. 169
Checking the V-belt tension. 152
Check the condition and operation of chain. 56
Check the wheel nuts for correct condition. 55
Cleaning the air filter. 154
Cleaning the electrical system. 118
Cleaning the truck. 116
Closing the bonnet. 139
Competent person. 15
Conformity marking. 6
Consumables. 29
Disposal. 28
Safety information for handling battery acid. 27
Safety information for handling oils. . . 26
Safety information for hydraulic fluid. . 27

D

Daily checks before use. 52
Danger area. 92
Definition of terms used for responsible persons. 15
Description of use and climatic conditions. . 4
Determining visibility conditions when driving with a load. 101
Diesel fuel - Specifications. 62
Diesel oxidation catalytic converter. 76
Diesel particle filter. 76
Dimensions. 172
Direction selection lever. 73
Display unit. 39
Disposal of old trucks. 115
Disposing of components and batteries. . . 29
Draining water in the water trap. 147
Driver presence monitoring. 69
Drivers. 16
Driving. 82
Ascending gradients. 103
Descending gradients. 103
Driving brake pedal and inching pedal. . . . 85
Driving on lifts. 104
Driving on loading bridges. 106

E

EC declaration of conformity in accordance with the Machinery Directive. 8
Electric schematic diagram. 188

EMC – Electromagnetic compatibility. 7
Emergency exit from driver's cab with windows. 34
Emissions. 30

F

Fastening the seat belt. 66
Fill up the hydraulic oil. 160
Fire extinguisher. 13
Fitting the forks. 163
Forklift towing. 110
Forward. 83
Front wheel change. 159
Fuel system air bleeding. 149

G

General front view. 36
General information. 2
General rear view. 37

H

Handling consumables. 29
Handling gas springs and accumulators. . 24
Hydraulic diagram. 189
Hydraulic fluid. 27

I

Ignition device. 70
Improper use. 4, 18
Installing the bottom plate. 140
Insurance cover on company premises. . . . 2
Intended use. 3

L

Leaving the truck. 111
Leaving the truck temporarily. 110
Lifting the truck with a crane. 50
Lighting and turn indicator switch. 71
Load
Transporting. 100
Load centre distance and load capacity. . 90
Location of the decals. 43
Lubricate the lift mast and chains with chain spray. 119, 165
Lubricating the lift mast and tilt cylinder bearings. 166

M

Maintenance - 3000 hours. 134
Maintenance work without special qualifications. 127
Maintenance — 1000 hours. 131
Maintenance — 500 hours. 129
Manually lowering the fork arms. 33
Mast specification. 177
Modifications to the truck. 5

N

Nameplate. 40

O

Oils. 26
Opening the bonnet. 138
Operating attachments. 88
Operating company. 15
Operating permit. 2
Operating safely. 12
Operating the lifting device. 87
Operating the service brake. 85
Overview of the driver’s compartment. . . . 38

P

Packaging. 30
Parking brake. 86
Personnel qualifications. 127
Picking up a load. 96
Pre-shift checks. 52

R

Rear wheel replacement procedure. 158
Recommissioning after storage. 122
Regeneration. 76
Regeneration indication. 81
Regular inspections. 18
Regular safety inspection. 12
Regulations. 12
Removing the bottom plate. 140
Removing the forks. 162
Removing the mast. 48
Replacing the breather filter. 161
Replacing the V-belt. 153
Replacing the water trap. 145
Residual risks. 21
Reversing. 83

S

Safety guidelines. 12

Safety information
Active medical equipment. 14
Gas springs. 13
Non-ionising radiation. 14
Speed reduction. 13
Welding work. 13
Safety inspection. 18
Safety regulations when driving. 23
Safety regulations when handing loads. . . 90
Seat belt
Fastening. 66
Fastening on a steep slope. 67
Malfunction due to cold weather conditions. 68
Releasing. 67
Seat belt monitoring and alarm function. . 68
Seat belt status and performance checks. 53
Serial number. 40
Stability. 21
Start the engine. 74
Storage
Recommissioning. 122
Supply table. 137
Symbols. 5

T

Tension measurement. 153
Tip-over of the truck. 22
Towed load. 109
Transmission oil level inspection procedure. 60
Transporting pallets. 92
Transporting suspended loads. 93
Transport of swinging loads. 105
Truck Storage. 113

U

UK-Importer. 41
Use a truck or flatbed trailer to carry the forklift truck. 48

V

VDI Datasheet for RCD40. 173
VDI Datasheet for RCD50. 175

W

Warnings. 5
Wheel replacement procedure. 158

STILL GmbH

60128011601 EN - 04/20223 - 08

Original instructions

Diesel forklift truck

RCD40
RCD50

4231 4233

first in intralogistics

60128011601 EN - 04/20223 - 08

7

Diagrams

Electric schematic diagram

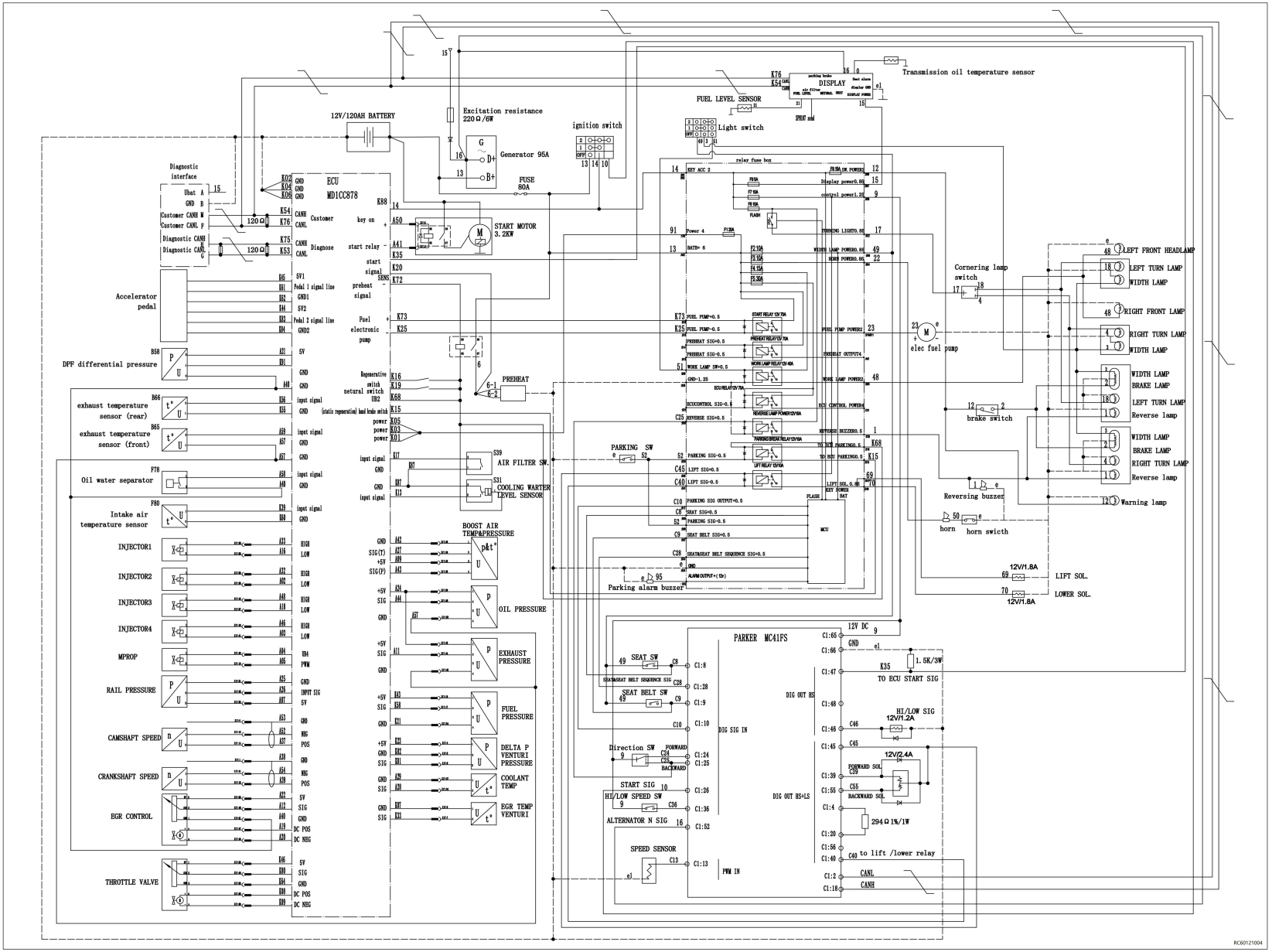

Hydraulic diagram

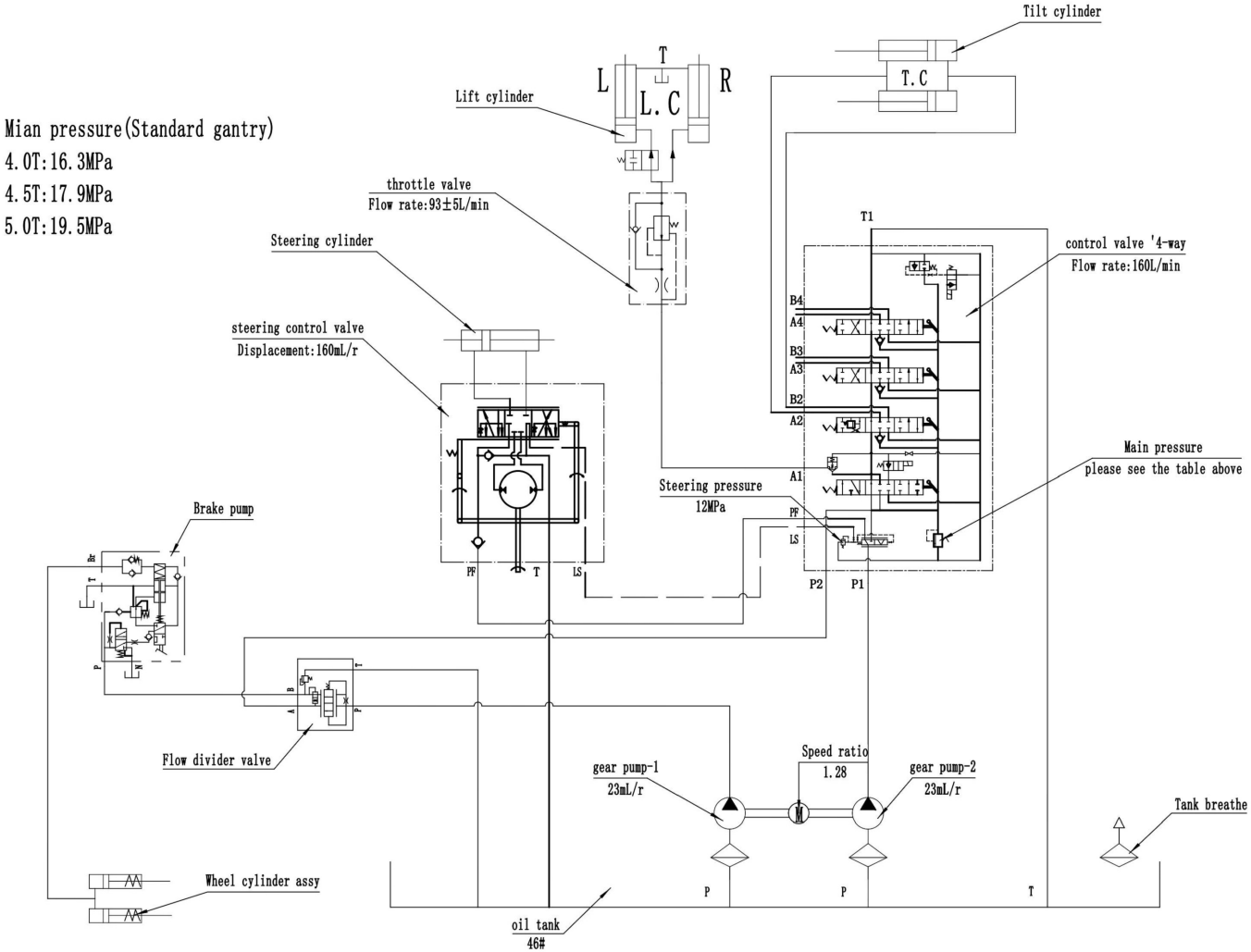

Brake diagram

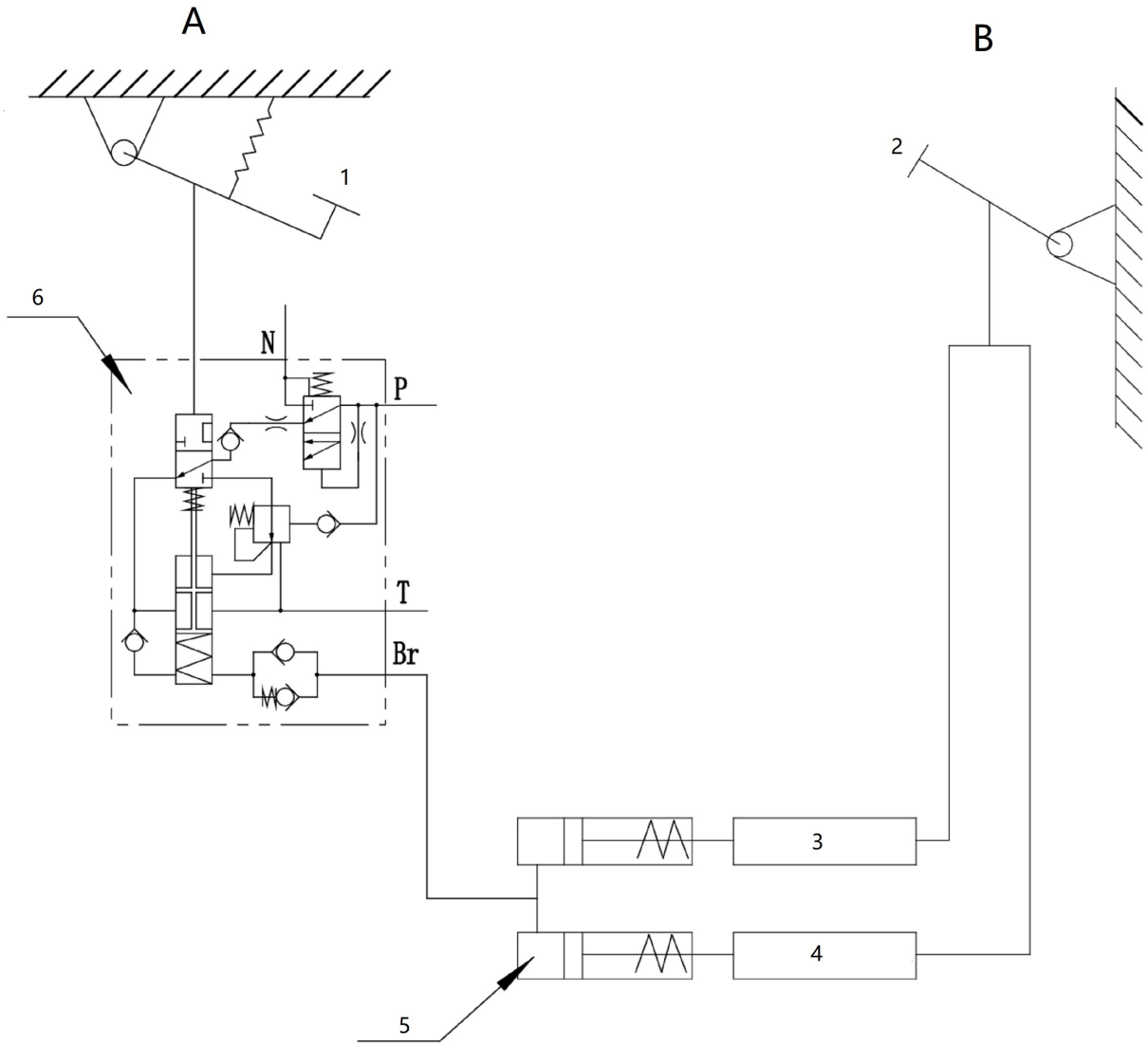

A	Driving brake	1	Driving brake pedal	3	Wheel brake	5	Wheel cylinder
B	Parking brake	2	Parking brake lever/pedal	4	Wheel brake	6	Master cylinder

STILL GmbH

60128011601 EN - 04/20223 - 08