Original instructions

# Electric Truck

RCE16P Li-Ion
RCE20P Li-Ion
RCE15 Li-Ion
RCE16 Li-Ion
RCE20 Li-Ion

5430 5431 5433 5434 5436

first in intralogistics

1292 801 1591 EN - 10/2024 - 05

## Address of manufacturer and contact details ▷

STILL GmbH
Berzeliusstraße 10
22113 Hamburg, Germany
Tel. +49 (0) 40 7339-0
Fax: +49 (0) 40 7339-1622
Email: info@still.de
Website: http://www.still.de

Made in China

## Rules for the operating company of industrial trucks

In addition to these operating instructions, a code of practice containing additional information for the operating companies of industrial trucks is also available.

This guide provides information for handling industrial trucks:

- Information on how to select suitable industrial trucks for a particular area of application
- Prerequisites for the safe operation of industrial trucks
- Information on the use of industrial trucks
- Information on transport, initial commissioning and storage of industrial trucks

### Internet address and QR code ▷

The information can be accessed at any time by pasting the address **https://m.still.de/vdma** in a web browser or by scanning the QR code.

## Spare parts list

You can request to download the spare parts list by copying and pasting the address **https://sparepartlist.still.eu** into a web browser or by scanning the QR code shown to the side.

On the web page, enter the following password: **Spareparts24!**

On the next screen, enter your email address and truck serial number to receive an email with the link and download the spare parts list.

2511

# 1 Introduction

**Your industrial truck** . . . . . 2
Technical description . . . . . 2
General . . . . . 4
Conformity marking . . . . . 5
Declaration that reflects the content of the declaration of conformity . . . . . 6
Nameplate . . . . . 7
Serial number . . . . . 7

**Using the truck** . . . . . 8
Commissioning . . . . . 8
Intended use . . . . . 9
Improper use . . . . . 10
Precautions . . . . . 11
Description of use and climatic conditions . . . . . 12
Parking in temperatures below -10 °C . . . . . 12
Using working platforms . . . . . 12

**Information about documentation** . . . . . 13
Documentation scope . . . . . 13
Supplementary documentation . . . . . 13
Issue date and topicality of the operating instructions . . . . . 14
Copyright and trademark rights . . . . . 14
Explanation of signal terms used . . . . . 15
Date of edition and latest update of this manual . . . . . 16
List of abbreviations . . . . . 16
Definition of directions . . . . . 18
Illustrations . . . . . 18

**Environmental considerations** . . . . . 19
Packaging . . . . . 19
Disposal of components and batteries . . . . . 19

# 2 Safety

**Safety guidelines** . . . . . 22

**Special notes for using lithium-ion batteries** . . . . . 25

**Stability** . . . . . 27

**In the case of tip-over** . . . . . 27

**Definition of terms used for responsible persons** . . . . . 28
Specialist . . . . . 28
Operating company . . . . . 28
Drivers . . . . . 29

**Basic principles for safe operation** . . . . . 31
Insurance cover on company premises . . . . . 31
Modifications and retrofitting . . . . . 31
Changes to the overhead guard and roof loads . . . . . 33
Warning regarding non-original parts . . . . . 33
Damage, faults . . . . . 33
Medical devices . . . . . 34
Battery connection cables . . . . . 34
Wheels and tyres . . . . . 34
Damage, defects and misuse of safety systems . . . . . 35
Length of the fork arms . . . . . 35
Exercise caution when handling gas springs and accumulators . . . . . 36

**Residual risks** . . . . . 37
Residual dangers, residual risks . . . . . 37
Special risks associated with using the truck and attachments . . . . . 38
Overview of hazards and countermeasures . . . . . 40
Danger to employees . . . . . 42

**Safety tests** . . . . . 44
Carrying out regular inspections on the truck . . . . . 44
Insulation testing . . . . . 44

**Safety regulations for handling consumables** . . . . . 46
Permissible consumables . . . . . 46
Hydraulic fluid . . . . . 46
Battery acid . . . . . 46
Disposal of consumables . . . . . 47

**Noise level** . . . . . 47

**Frequency characteristics for vibrations imparted to the human body** . . . . . 48

**Emergency exit from driver's cab with windows** . . . . . 49

**Manually lowering the fork arms with ISO** . . . . . 50

**Safety guidelines for using the truck** . . . . . 50

**Safety regulations when driving** . . . . . 51

**Safety regulations in case of accidental lateral tipping** . . . . . 52

## 3 Overview

**General view** . . . . . 54

**Steering axle type** . . . . . 55

**General view of driver's compartment** . . . . . 57

Warning Label Diagram . . . 58
Display unit . . . 60
Switch panel . . . 61
Relays and fuses overview . . . 62

4 Operation

Service plan before first start . . . 66
Instructions for running-in . . . 66
Pre-shift checks . . . 66
Daily inspection items . . . 68
Periodic inspection items . . . 69
Troubleshooting guide . . . 69
Mounting/dismounting . . . 71
Seat belt status and performance checks . . . 72
Checking condition and performance . . . 72
Adjusting the seat and seat belt . . . 72
Seat belt monitoring and alarm function . . . 76
Operating the horn . . . 77
Checking the brake system for correct function . . . 78
Checking the steering system for correct function . . . 81
Adjusting the steering column . . . 81
Emergency off switch . . . 82
Turn on and off lithium battery . . . 84
Switching the truck on and off . . . 85
Setting the display unit . . . 87
Performance mode . . . 89
Driving . . . 90
Driving . . . 90
Forward travel . . . 91
Reverse travel . . . 92
Changing the drive direction . . . 92
Brake system . . . 93
Brake system information . . . 93
Foot brake/emergency brake . . . 93

Electronic regenerative braking . . . 94
Parking brake . . . 95

**Checking battery level** . . . 96

**Battery cover — Open - Closed** . . . 97

**Battery hood gas spring** . . . 99

**Safety regulations for handling the lithium-ion battery** . . . 99

**Connecting the rechargeable battery to an external charger** . . . 102

**Check rechargeable battery condition (lithium-ion battery).** . . . 103

**Lifting devices and attachments** . . . 104
Operating the lifting device . . . 104
Operating attachments . . . 105

**Transporting loads** . . . 107
Load centre distance and load capacity . . . 107
Capacity rating plate . . . 107
Additional capacity rating plate . . . 110
Adjusting the fork spacing . . . 111
Picking up a load . . . 112
Determining visibility conditions when driving with a load . . . 113
Transporting pallets . . . 114
Transporting suspended loads . . . 114
Picking up a load . . . 115
Transporting loads . . . 119
Setting down loads . . . 120
Driving on ascending and descending gradients . . . 122
Driving onto lifts . . . 123
Driving on loading bridges . . . 124
Tow coupling . . . 125
Leaving the truck temporarily . . . 125
Before exiting the truck . . . 126

**Operation in special operating situations** . . . 128
Transport . . . 128
Towing . . . 130
Crane loading . . . 132

**Storing the truck** . . . 136
Taking the truck out of operation . . . 136

**Disposal of old trucks** . . . 138

## 5 Maintenance

**Safety information for inspection and maintenance work** . . . . . 140

**Working at the front of the truck** . . . . . 140

**Lifting and jacking up** . . . . . 141

**Inspection and maintenance data** . . . . . 142

**Recommended fuels and oils** . . . . . 145

**Regular maintenance** . . . . . 148

**Service plan table** . . . . . 149

**1000 hour service plan** . . . . . 150

**3000 hour service plan** . . . . . 152

**Drive mechanism and transmission system** . . . . . 153
Checking the oil level of the reduction gearbox . . . . . 153
Checking the reduction gearbox for leaks . . . . . 153
Change the reduction gearbox oil . . . . . 154
Check for leaks and check the mounting between the reduction gearbox and the drive motor . . . . . 155
Checking the wheels . . . . . 155
Check the tyre inflation pressure . . . . . 157
Tightening the wheel nuts . . . . . 157
Changing wheels . . . . . 158
Checking the condition of the antistatic belt . . . . . 160
Clean and lubricate the steering axle . . . . . 160
Checking the brake system . . . . . 161

**Chassis and bodywork** . . . . . 163
Checking the connecting bolts of the drive axle and lift mast . . . . . 163
Checking the battery cover locking devices . . . . . 163

**Driver's cab** . . . . . 164
Checking the pedal group for ease of movement and lubricating as required . . . . . 164
Checking other bearings and connections and lubricating . . . . . 164
Adjust joysticks . . . . . 164
Checking the joystick bellows . . . . . 165

**Electrics/electronics** . . . . . 166
Checking the control module for dirt . . . . . 166
Checking the main contactor . . . . . 166
Inspecting and maintaining the lithium-ion battery . . . . . 167
Removing battery safety devices . . . . . 167

**Hydraulics** . . . . . 168
Checking the hydraulic system for leaks . . . . . 168
Checking the hydraulic oil level . . . . . 169
Checking the breather filter is working normally . . . . . 171
Checking installation of the tilt cylinder . . . . . 172
Lubricating tilt cylinder bearings . . . . . 173

**Lifting system** . . . . . 174
Changing the fork arms . . . . . 174
Check the fork arms and the fork arm quick-release apparatus . . . . . 176
Checking the working condition and installation of the lift mast, lifting chains and lift cylinder . . . . . 177
Adjusting the length of the lifting chains and lubricating using chain spray . . . . . 178
Lubricating the lift mast and chains with chain spray . . . . . 179

**Special equipment** . . . . . 181
Checking the preload of the double hoses (if equipped with attachments) . . . . . 181
Cleaning and lubricating the sideshift forks* and checking connections . . . . . 181

## 6 Technical datasheet

**Technical datasheet(RCE15 Li-Ion, RCE16 Li-Ion, RCE20 Li-Ion)** . . . . . 184
Dimensions overview . . . . . 184
Technical datasheet . . . . . 185

**Technical datasheet(RCE16P Li-Ion, RCE20P Li-Ion)** . . . . . 188
Dimensions overview . . . . . 188
Technical datasheet . . . . . 189

**Eco-design requirements for electric motors and variable speed drives** . . . . . 191

# 1

# Introduction

# Your industrial truck

## Technical description

The truck benefits from a compact design and good visibility characteristics. It offers optimum stability and safe turning during hard cornering. The truck has an electric drive unit and an electric motor with a hydraulic pump for the steering and working hydraulics.

This forklift range includes the following models:

| Electric forklift trucks in this range: | |
|---|---|
| Three wheels models ( 3W ) | RCE15 Li-Ion、RCE16 Li-Ion、RCE20 Li-Ion |
| Four wheels models ( 4W ) | RCE16P Li-Ion、RCE20P Li-Ion |

The three wheels models (3W) is fitted with a compact steering axle. The compact steering axle offers low energy consumption, while tyre wear is minimal due to mutual compensation by the dual rear wheels. Body width is small and steering light and flexible, making it especially suitable for working in narrow spaces.

The four wheels models (4W) is fitted with a swing steering axle. The swing steering axle ensures that the entire axle has a larger swing range, stronger grip and increased driving safety, making it especially suited to use on uneven road surfaces.

If you require further information on the different versions, contact your authorised service partners.

### Drive

The front wheels are directly driven by the drive axle, which uses a built-in driving motor and has a water resistance rating of IP67. The drive axle uses a wet braking system, which is friction-free. The ability to climb and stay on a slope can reach 20% without loads and 18% with loads.

The power required is supplied by the power battery installed in the truck.

## Steering

Steering wheel operation effortlessly controls the steering cylinder of the power steering system, allowing the truck to turn.

A compact steering axle allows the truck to perform tight and stable corning on the spot.

## Hydraulic system

The hydraulic system consists of an electric motor with a hydraulic pump (for steering and mast lifting), tilt cylinders for the lift mast, a breather filter, oil return filter and hydraulic oil tank as well as a suction filter.

## Operations

The drive motor is controlled by the forward pedal and reversing switch. Forward and reverse speeds can be adjusted between standstill and maximum speed.

The driver uses both hands to control steering and various operations,

thereby enabling quick direction changes and efficient stacking.

One control lever is used to control the lifting and lowering movements. One control lever is used to control the tilting movements. One or two additional lever can be installed to operate other attachments.

## Brake

Service braking of the truck can be achieved using the brake pedal. When the accelerator pedal is released, the truck performs electrical braking using braking controls. This truck is equipped with an energy recovery system. When driving, braking, or when the accelerator pedal is not pressed, energy is transformed into electrical energy and recharges the power battery.

The parking brake is actuated using the foot brake.

### Electrical system

The well-protected electronic system is located on the inside of the interior trim panel, on the back side of the truck.

The required power is supplied by the power battery built into the chassis.

## General

The industrial truck described in these operating instructions conforms with the applicable standards and safety regulations.

The industrial truck is fitted with state-of-the-art technology. Following these operating instructions will allow the industrial truck to be handled safely. By complying with the specifications in these operating instructions, the functionality and the approved features of the industrial truck will be retained.

Get to know the technology, understand it and use it safely - these operating instructions provide the necessary information and help to avoid accidents and to keep the truck ready for operation beyond the warranty period.

Therefore:

– Before commissioning the industrial truck, read the operating instructions and follow the instructions.

– Always follow all the safety information contained in the operating instructions and on the industrial truck.

## Conformity marking

The manufacturer uses the conformity marking to document the conformity of the industrial truck with the relevant directives at the time of placing on the market:

- CE: in the European Union (EU)
- UKCA: in the United Kingdom (UK)
- EAC: in the Eurasian Economic Union

The conformity marking is applied to the nameplate. A declaration of conformity is issued for the EU and UK markets.

An unauthorised structural change or addition to the industrial truck can compromise safety, thus invalidating the declaration of conformity.

▷

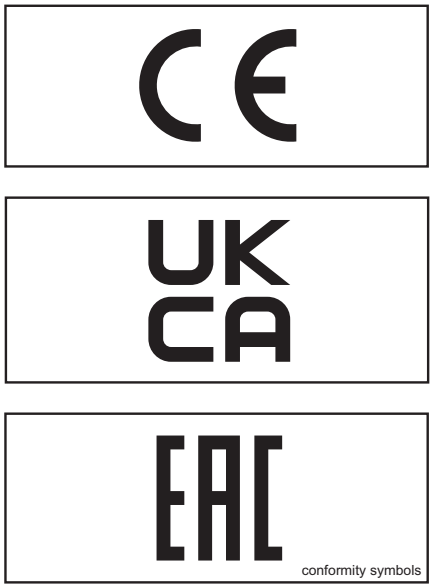

conformity symbols

# Declaration that reflects the content of the declaration of conformity

**Declaration**

STILL GmbH
Berzeliusstraße 10
22113 Hamburg Germany

We declare that the specified machine conforms to the most recent valid version of the directives specified below:

| | |
|---|---|
| Industrial truck type | **corresponding to these operating instructions** |
| Model | **corresponding to these operating instructions** |

– "Machinery Directive 2006/42/EC" [1)]
– "Supply of Machinery Safety Regulations 2008, 2008 No. 1597" [2)]

Personnel authorised to compile the technical documents:

See declaration of conformity

STILL GmbH

[1)] For the markets of the European Union, the EU candidate countries, the EFTA States and Switzerland.
[2)] For the United Kingdom market.

The declaration of conformity document is supplied with the industrial truck. The declaration shown explains the conformity with the provisions of the EC Machinery Directive and the Supply of Machinery Safety Regulation 2008, 2008 No. 1597.

An unauthorised structural change or addition to the industrial truck can compromise safety, thus invalidating the declaration of conformity.

The declaration of conformity must be carefully stored and made available to the responsible authorities if necessary. It must also be handed over to the new owner if the industrial truck is sold on.

## Nameplate

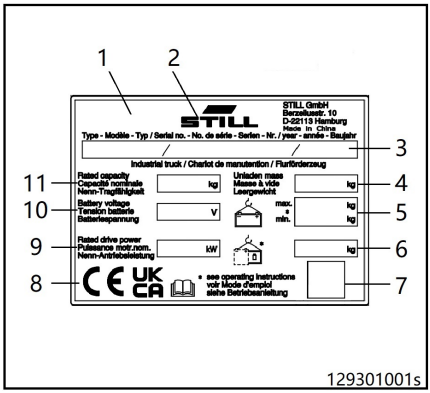


1 Nameplate
2 Manufacturer
3 Model/Product no./Year of manufacture
4 Unladen mass
5 Battery weight (max./min.)
6 Service weight
7 Placeholder for "Data matrix code"
8 Conformity marking:
**CE mark** for the markets of the EU, the EU candidate countries, the EFTA States and Switzerland
**UKCA mark** for the United Kingdom market
**EAC mark** for the Eurasian Economic Union market
9 Rated drive power
10 Battery voltage
11 Rated capacity

**NOTE**

- *It is possible for there to be multiple conformity markings on the nameplate.*
- *The EAC mark may also be located in the immediate vicinity of the nameplate.*

## Serial number

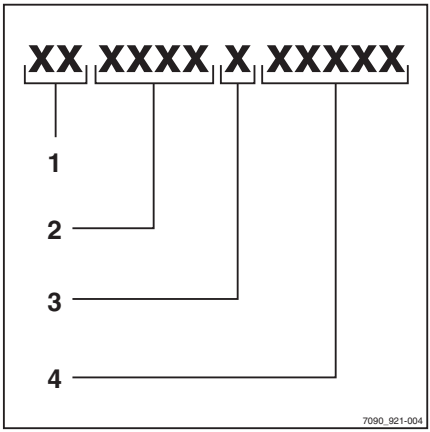


The serial number is used to identify the truck. The serial number is shown on the nameplate. Quote the serial number for all technical questions.

The serial number contains the following coded information:

1 Production location
2 Model
3 Year of manufacture
4 Sequential number

# Using the truck

## Commissioning

Commissioning is the initial intended use of the truck.

The necessary steps for the commissioning vary depending on the model and equipment of the truck. These steps require preparatory work and adjustment work that cannot be performed by the operating company. See also the chapter entitled "Definition of responsible persons".

– To commission the truck, contact the authorised service centre.

## Intended use

The industrial truck may be used only for its intended purpose.

The industrial truck is intended for moving and lifting the loads specified on the capacity rating plate while observing the instructions given in these operating instructions.

### Damage and faults

Damage or other faults on the industrial truck or the attachment must be immediately reported to supervisory personnel. Industrial trucks and attachments that are not operationally safe must not be used until they are properly repaired.

Do not remove or deactivate safety systems and switches. Fixed set values may only be changed with the approval of the manufacturer.

### Danger area

The danger area is the area within which people may be at risk due to the movements of the industrial truck, its working equipment, its lifting accessories (e.g. attachments) or the goods that are carried. This also includes the area that can be affected by falling cargo or by lowering or falling working equipment.

People must not stand in the danger area of an industrial truck.

### Working area

It is only permitted to drive on routes authorised for traffic by the operating company or its representatives. Traffic routes must be free from obstacles. Loads may only be set down and stored in the designated areas provided for this purpose.

### Roadways

Roadways must be sufficiently firm, level and free from objects. Drainage channels, level crossings and similar obstacles must be evened out and, if necessary, ramps must be provided so that trucks can drive over these obstacles with as few bumps as possible.

Industrial trucks may only be used on roadways that do not have bends that are too sharp, gradients that are too steep or entrances that are too narrow or low.

Gradients may not exceed the values given in the operating instructions and must have a sufficiently rough surface. The top and bottom of the gradient must feature smooth and gradual transitions to prevent the load from scraping the ground and the undercarriage from being damaged.

Industrial trucks must not be parked on surfaces with a gradient. If this cannot be avoided, the industrial truck must be secured using wheel chocks in addition to the activated parking brake.

Do not exceed the permitted area load and point load of the roadway. There must be sufficient distance between the highest points of the industrial truck or the load and the fixed elements of the surrounding area.

Within the EU, the current version of directive 89/654/EEC (minimum safety and health requirements for the workplace) must be observed. The respective national guidelines apply for areas outside the EU.

Hazardous areas on roadways must be safeguarded or indicated by the standard road traffic signs and, if applicable, by additional warning signs.

When driving on public roads, the national regulations pertaining to drivers and industrial trucks must be observed. Observe country-specific restrictions for winter road conditions.

### Fire protection

The operating company must ensure that suitable fire protection is available for the relevant application in the surroundings of the industrial truck. Depending on the application, additional fire protection on the industrial truck may be necessary. If in doubt, the responsible fire brigade can be contacted.

NOTE

*If the truck is equipped with a fire extinguisher, the driver must fully understand how to use it. Instructions for use are provided on the fire extinguisher.*

### Attachments

Attachments may only be used for their intended purpose. Drivers must be taught how to operate the attachments.

Attachment operating instructions are enclosed for industrial trucks that are delivered from the factory with an attachment. Before commissioning an industrial truck with an attachment, check that loads are handled safely. Depending on the type of attachment, it may be necessary to make adjustments, e.g. pressure settings or adjusting stops and operating speeds. Corresponding instructions can be found in the operating instructions for the attachment.

If attachments are not supplied with the industrial truck, the specifications of the industrial truck manufacturer and the attachment manufacturer must be observed.

Mounting the attachment and connecting the energy supply for power-driven attachments must only be performed by authorised personnel in accordance with the information provided by the manufacturers. After each installation, the attachment must be checked for correct function prior to initial commissioning.

The permissible load capacity of the attachment and the permissible load (load capacity and load moment) of the industrial truck must not be exceeded by the combination of attachment and payload, see additional capacity rating plate.

Modifications, in particular attachments or conversions, are not permitted to be made to the industrial truck without the manufacturer's approval.

## Improper use

The operating company or driver, and not the manufacturer, is liable if the truck is used in a manner that is not permitted.

**WARNING**

One of the main causes of accidents is the driver ignoring or being unaware of the basic safe operating practices of the truck.

The following basic safe operating practices must be observed to ensure the safety of operators and others.

**DANGER**

**High risk of injury, death and property damage.**

Avoid the use of prohibited substances.

The list below is merely illustrative and not exhaustive.

Never operate the truck in environments with a potentially explosive atmosphere.

Do not carry another passenger (unless a "two-person seat" is installed).

Do not overload the truck (by exceeding the rated load indicated on the load designation plate). Overloading can affect braking distances, truck stability and the strength of the lift mast.

Do not pick up an off-centre load.

Do not stand on the fork arms when they are lifting.

Do not increase the load capacity of the truck, by adding extra weight, for example.

Do not stack loads or turn when driving on a ramp.

Do not operate the truck on loose or greasy surfaces.

Do not drive on uneven or obstructed surfaces.

Never park the truck in a place that may obstruct fire extinguishers, fire escapes or aisles.

Do not dismount from the truck while it is moving.

Do not leave the truck unattended when the load is raised.

Never leave the vehicle unattended on a ramp.

When driving, do not place any part of your body outside the confines of the truck, lean on the edge of the truck or attempt to jump onto another truck or object.

Do not use the forks or any other part of the truck to push, pull or support items, unless the design permits this.

### Operating steps

Adjust your driving style based on the conditions of the route, especially in hazardous work areas and when transferring loads.

**Always** look in the direction of travel.

Look out for pedestrians, to prevent the possibility of them becoming trapped between the truck and fixed obstacles.

Always sound the horn when approaching blind spots.

The truck and attachments must only be used for authorised applications.

Follow the instructions in the user manual when transporting loads.

On a ramp: Ensure that the truck has sufficient ground clearance to avoid striking the surface of the ramp. • Fully raise the load to avoid striking the surface of the ramp.

Drive a loaded truck forward when going uphill.

Drive a loaded truck in reverse when going downhill.

When raising a spreader, ensure that there is enough clearance.

When working near overhead power lines, observe the safety distances set by the competent authorities.

Only travel on surfaces that can withstand the combined weight of the truck and load.

Before leaving the operator's driving position, turn off the ignition and make sure you have applied the parking brake.

When driving, maintain a safe stopping distance from any vehicle or pedestrians in front of you.

Drivers should move off, brake, turn and reverse smoothly. Avoid sudden stops, sharp turns and overtaking at dangerous or blind spots.

Ensure that there is adequate ventilation when using the truck in enclosed or partially enclosed areas.

### Summary

A safe, competent operator is one who takes pride in the way they operate their truck, respects the goods they handle and follows the correct operating procedures. **They never take risks**.

## Precautions

– Do not drive on steep slopes, to prevent the load from slipping off.

– The truck must be switched off when left unattended. Key (or key code) must be removed when the truck is unattended to prevent unauthorised use.

– When using this truck, pay attention to the surroundings and do not become distracted.

– Please pay attention to the moving parts of the truck to prevent your hands from being crushed.

## Description of use and climatic conditions

- Standard truck should run continuously in ambient temperature of: -10°C to 40°C.
- The minimum ambient temperature for a short period of time (not more than 1 hour) using theforklift under normal outdoor conditions -35°C
- The maximum ambient temperature for a short period of time (not more than 1 hour) usingthe forklift under normal outdoor conditions is 50°C.

## Parking in temperatures below -10 °C

**⚠ CAUTION**

Batteries may freeze or switch off!

If the truck is parked in an ambient temperature of below -10°C for an extended period, the batteries will cool down.

Some types of lithium-ion batteries switch off at a certain temperature. These batteries cannot be switched on again until the operating temperature is reached.

The truck is then not ready for operation.

- At ambient temperatures of below -10°C, only park the truck for short periods of time.
- Pay attention to the equipped battery and the corresponding operating instructions.

## Using working platforms

**⚠ WARNING**

The use of working platforms is regulated by national law. The use of working platforms is only permitted by virtue of the jurisdiction in the country of use.

- Observe national legislation.
- Before using working platforms, consult the national regulatory authorities.

# Information about documentation

## Documentation scope

- Operating instructions
- Operating instructions for attachment parts (special equipment)
- Spare parts list

These operating instructions describe all measures necessary for the safe operation and proper maintenance of the truck in all possible variants at the time of printing. Special designs to meet customer requirements are documented in separate operating instructions. If you have any questions, please contact your service centre.

Enter the production number and the year of production located on the nameplate in the field provided:

**Production no. .....**

**Year of production .....**

Please quote these numbers for all technical enquiries.

Operating instructions are provided with each truck. These instructions must be stored carefully and must be available to the driver and operator at all times.

If the operating instructions are lost, the operator must immediately request a replacement from the manufacturer.

The spare parts list can be reordered there as a spare part.

Personnel responsible for operating and maintaining the equipment must be familiar with these operating instructions.

The operating company (see the chapter “Definition of responsible persons”) must ensure that all operators have received, read and understood these instructions.

Thank you for reading and complying with these operating instructions. If you have any questions or suggestions for improvements, or if you have found any faults, please contact your service centre.

## Supplementary documentation

This industrial truck can be fitted with a **C**ustomer **O**ption (**CO**) that deviates from the standard equipment and the variants.

This CO may consist of:

- Special sensors
- A special attachment
- A special towing device
- Customised attachments

When fitted with a CO, the industrial truck is provided with additional documentation. This may take the form of an insert or separate operating instructions.

The original operating instructions for this industrial truck are valid for the operation of standard equipment and variants without restriction. The operational and safety

information in the original operating instructions continues to be valid in its entirety unless it is countermanded in this additional documentation.

The requirements for the qualification of personnel as well as the time for maintenance may vary. This is defined in the additional documentation.

– If you have any questions, contact your authorised service centre.

## Issue date and topicality of the operating instructions

The issue date and the version of these operating instructions can be found on the title page.

STILL is constantly engaged in the further development of trucks. These operating instructions are subject to change, and any claims based on the information and/or illustrations contained in them cannot be asserted.

Please contact your authorised service centre for technical support relating to your truck.

## Copyright and trademark rights

These instructions, including excerpts thereof, must not be reproduced, translated or made accessible to third parties, except with the express written approval of the manufacturer.

## Explanation of signal terms used

**DANGER**

**Indicates procedures that must be strictly adhered to in order to prevent the risk of fatalities.**

**WARNING**

Indicates procedures that must be strictly adhered to in order to prevent the risk of injuries.

**CAUTION**

Indicates procedures that must be strictly adhered to in order to prevent material damage and/or destruction.

**NOTE**

*For technical requirements that require special attention.*

**ENVIRONMENT NOTE**

*To prevent environmental damage.*

## Date of edition and latest update of this manual

The publication date of these operating instructions is printed on the cover sheet.

The manufacturer makes continuous efforts to improve its industrial trucks with modifications. The manufacturer reserves the right to make such additions to the contents of the truck's operating instructions in a timely manner.

To receive technical assistance, please contact the service centre authorised by your closest manufacturer.

## List of abbreviations

This list of abbreviations applies to all types of operating instructions. Not all of the abbreviations that are listed here will necessarily appear in these operating instructions.

| Abbreviation | Meaning | Explanation |
|---|---|---|
| ArbSchG | Arbeitsschutzgesetz | German implementation of EU occupational health and safety directives |
| Betr-SichV | Betriebssicherheitsverordnung | German implementation of the EU working equipment directive |
| BG | Berufsgenossenschaft | German insurance company for the company and employees |
| BGG | Berufsgenossenschaftlicher Grundsatz | German principles and test specifications for occupational health and safety |
| BGR | Berufsgenossenschaftliche Regel | German rules and recommendations for occupational health and safety |
| DGUV | Berufsgenossenschaftliche Vorschrift | German accident prevention regulations |
| CE | Communauté Européenne | Confirms conformity with product-specific European directives (CE labelling) |
| CEE | Commission on the Rules for the Approval of the Electrical Equipment | International commission on the rules for the approval of electrical equipment |
| DC | Direct Current | Direct current |
| DFÜ | Datenfernübertragung | Remote data transfer |
| DIN | Deutsches Institut für Normung | German standardisation organisation |
| EG | European Community | |
| EN | European standard | |
| FEM | Fédération Européene de la Manutention | European Federation of Materials Handling and Storage Equipment |

| Abbreviation | Meaning | Explanation |
|---|---|---|
| $F_{max}$ | maximum Force | Maximum power |
| GAA | Gewerbeaufsichtsamt | German authority for monitoring/issuing regulations for worker protection, environmental protection, and consumer protection |
| GPRS | General Packet Radio Service | Transfer of data packets in wireless networks |
| ID no. | Identification number | |
| ISO | International Organization for Standardization | International standardisation organisation |
| $K_{pA}$ | Uncertainty of measurement of sound pressure levels | |
| LAN | Local Area Network | Local area network |
| LED | Light Emitting Diode | Light emitting diode |
| $L_p$ | Sound pressure level at the workplace | |
| $L_{pAZ}$ | Average continuous sound pressure level in the driver's compartment | |
| LSP | Load centre of gravity | Distance of the centre of gravity of the load from the front face of the fork backs |
| MAK | Maximum workplace concentration | Maximum permissible air concentrations of a substance at the workplace |
| Max. | Maximum | Highest value of an amount |
| Min. | Minimum | Lowest value of an amount |
| PIN | Personal Identification Number | Personal identification number |
| PPE | Personal protective equipment | |
| SE | Super-Elastic | Superelastic tyres (solid rubber tyres) |
| SIT | Snap-In Tyre | Tyres for simplified assembly, without loose rim parts |
| StVZO | Straßenverkehrs-Zulassungs-Ordnung | German regulations for approval of vehicles on public roads |
| TRGS | Technische Regel für Gefahrstoffe | Ordinance on hazardous materials applicable in the Federal Republic of Germany |
| UKCA | United Kingdom Conformity Assessed | Confirms conformity with the product-specific directives that apply in the United Kingdom (UKCA labelling) |
| VDE | Verband der Elektrotechnik Elektronik Informationstechnik e. V. | German technical/scientific association |
| VDI | Verein Deutscher Ingenieure | German technical/scientific association |

| Abbreviation | Meaning | Explanation |
|---|---|---|
| VDMA | Verband Deutscher Maschinen- und Anlagenbau e. V. | German Mechanical Engineering Industry Association |
| WLAN | Wireless LAN | Wireless local area network |

## Definition of directions

The directions "forwards" (1), "backwards" (3), "right" (2) and "left" (4) refer to the installation position of the parts as seen from the driver's compartment; the load is to the front.

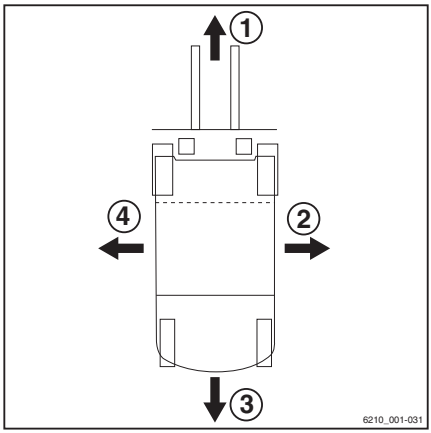


## Illustrations

At many points in this documentation the (mostly sequential) operation of certain functions or operating procedures is explained. To illustrate these operations, schematic representations of an truck are used.

NOTE

*These schematic representations do not represent the design state of the documented truck. They only serve to illustrate operating procedures.*

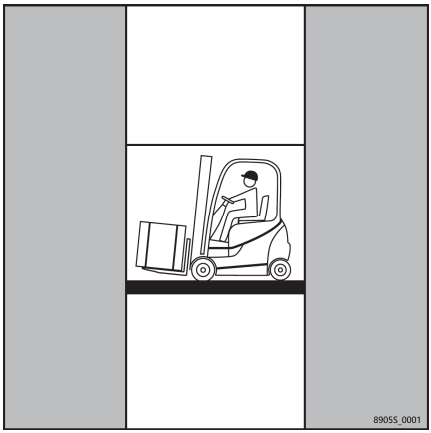

# Environmental considerations

## Packaging

During delivery of the truck, certain parts are packaged to provide protection during transport. This packaging must be removed completely prior to initial start-up.

ENVIRONMENT NOTE

*The packaging material must be disposed of properly after delivery of the truck.*

## Disposal of components and batteries

The truck is composed of different materials. If components or batteries need to be replaced and disposed of, they must be:

- disposed of,
- treated or
- recycled in accordance with regional and national regulations.

NOTE

*The documentation provided by the battery manufacturer must be observed when disposing of batteries.*

ENVIRONMENT NOTE

*We recommend working with a waste management company for disposal purposes.*

# 2

# Safety

# Safety guidelines

The operating company or the person it has commissioned must ensure that the driver understands all safety information and that all directives and safety regulations are observed.

During training, drivers must familiarise themselves with the following:

- The operating conditions of the working area
- The specific technical characteristics of the industrial truck
- The operation of attachments

Driving, control and steering operations must be practised with an unladen industrial truck until they are completely mastered. Only then may a laden industrial truck be used for practice.

## Operating safely

**⚠ DANGER**

**The industrial truck must not be used by unauthorised persons.**

Only persons who are trained, authorised and commissioned to operate the industrial truck may have access to the industrial truck.

Controlled access is possible via the switch key or an input unit with a keypad or with a transponder.

**⚠ DANGER**

**Risk of fatal injury due to insufficient visibility.**

Trucks may only be operated if the driver has sufficient visibility.

– Ensure that there is sufficient light in the working area or use working spotlights.

– Glare caused by lighting (e.g. clipboard lighting). If necessary, adjust or switch off the lighting accordingly.

– The windscreen, rear window, roof panel and side windows as well as the rear-view mirror and lighting must be cleared of misting and, if necessary, dirt, ice and snow before driving off.

– For trucks with a driver's cab without a heating system or without air conditioning, the driver must ensure that they have a clear view by ventilating the cab during operation.

**⚠ DANGER**

**Safety systems (e.g. the seat switch) are in place to ensure safety.**

Under no circumstances may any safety systems be disabled.

**⚠ CAUTION**

Various pieces of special equipment are connected to the "speed reduction" special function. This is purely an assistance function, and the driver must not rely solely on this function during operation.

The driver is always responsible for safe operation.

**NOTE**

*If the truck is equipped with a fire extinguisher, make sure that you familiarise yourself with how to use it in the event of an emergency. Instructions for use are provided on the fire extinguisher.*

## Working on the truck

**⚠ DANGER**

**Any additional bores or welding on the overhead guard will compromise its rigidity.**

It is therefore strictly prohibited to drill bores in the overhead guard or to perform welding work on it.

**⚠ WARNING**

In trucks with an accumulator, serious injuries may occur if the accumulator is handled incorrectly.

Before starting work on the accumulator, it must be depressurised.

Contact your service partner.

**⚠ CAUTION**

Welding operations on other parts of the truck can cause damage to the electronics.

Therefore, always disconnect the battery and all connections to the electronic controls before performing any welding work.

**⚠ CAUTION**

Various functions are supported by gas springs. Gas springs are subjected to a high internal pressure of up to 300 bar.

Gas springs may be removed only when they are not under tension, and must never be opened without prior instruction. Any kind of damage, lateral forces, buckling, temperatures in excess of 80°C and heavy contamination must be avoided under all circumstances.

Damaged or defective gas springs must be replaced immediately.

Contact your service partner.

## Safety information for electromagnetic compatibility

**⚠ WARNING**

In operating areas with magnetic fields that have a magnetic flux density greater than 5 mT, unintentional truck movements and lift mast movements cannot be entirely excluded in unfavourable circumstances.

For magnetic fields with magnetic flux densities greater than 5 mT, components developed especially for this purpose must be used.

Contact your service partner.

Magnetic flux densities greater than 5 mT can occur in induction furnaces for metal smelting (e.g. aluminium), with resistance welders for seam or spot welding, or on strong demagnetisation coils, for example. However, as the flux densities reduce to a fraction as the distance increases by e.g. 50 cm, actual influences are not known to occur in practice.

Electromagnetic radiation emitted by the industrial truck is far below the permissible limit values in Europe. The immunity to electromagnetic radiation is above the minimum legal values.

**⚠ WARNING**

If a driver has active medical equipment such as a pace maker, defibrillator, cochlear implant, insulin pump or hearing aid, there is a possibility that the capabilities of the driver could be impaired.

The operating company must take drivers whose capabilities are restricted due to implanted or body-worn medical equipment into account in the hazard assessment. The instructions of the physician and of the manufacturer of the medical equipment must be followed.

**⚠ WARNING**

Risk from non-ionising radiation from retrofitted devices (e.g. radio transmitter).

Persons with active or non-active implanted medical equipment must not be exposed to excessive non-ionising radiation from the electromagnetic fields of retrofitted devices.

The guidelines from the respective device manufacturer must be followed. If necessary, fit a notice warning about non-ionising radiation within the field of vision of the driver.

## Special notes for using lithium-ion batteries

**⚠ DANGER**

**Risk of explosion!**

Heating to over 80°C, mechanical stress and incorrect use may lead to the battery exploding.

- Never heat the battery to over 80°C or expose it to naked flames.
- Do not subject the battery to excessive mechanical loads.
- Do not climb on the battery.
- Avoid impacts.
- Do not open the battery.
- Never short-circuit the battery connectors.
- Do not connect the battery with the polarity reversed.

## Permissible lithium-ion batteries

– Use only lithium-ion batteries that have been approved by STILL for use with this truck.

## Declaring the use of lithium-ion batteries

We recommend that the operating company informs the local fire brigade of the planned use of trucks fitted with lithium-ion batteries.

The health and safety representative and the workforce must also be informed that trucks with lithium-ion batteries are being used.

## Hazard assessment

In accordance with §3 of the German Ordinance on Industrial Safety and Health (BetrSichV), the operating company is obliged to perform a separate hazard assessment in order to assess the risks posed to the company by lithium-ion batteries.

– Observe the national regulations for the country in which the truck is being used.

## Driver qualification

In addition to the prerequisites set out in the chapter entitled "Definition of responsible persons", in the section entitled "Driver", please observe the following:

- The driver must be instructed in how to operate the lithium-ion battery.
- This truck must only be driven by drivers who have received instruction on the operation and the dangers of the lithium-ion batteries.

## Procedure in the event of a fire

Damaged lithium-ion batteries pose an increased fire hazard. In the event of a fire, large quantities of water are the best option to cool the battery.

– Evacuate the location of the fire as quickly as possible.

– Ventilate the location of the fire well, as the resulting combustion gases are corrosive if inhaled.

– Inform the fire brigade that lithium-ion batteries are affected by the fire.

– Observe the information provided by the battery manufacturer regarding the procedure in the event of a fire.

Water can be used to cool down an incipient fire.

### Transport

In certain circumstances, transporting the lithium-ion battery outside the premises may require a special transport container.

– Contact the authorised service centre for more information.

## Stability

Stability is guaranteed if your industrial truck is used according to its intended use.

The following actions may jeopardise stability:

- Driving with a raised load
- Cornering at excessive speeds
- Driving with a load that is protruding to the side (e.g. sideshift)
- Turning on and driving diagonally across descents or ascents
- Driving on descents or ascents with the load on the downhill side
- Loads that are too wide
- Driving with a swinging load
- Driving over ramp edges or steps

## In the case of tip-over

d3921101

- Stay buckled up
- Don't jump
- Hold on tight
- Brace feet
- Lean away

The stability of your industrial truck is ensured if used properly and as intended. Should the industrial truck tip over during an unapproved application or due to incorrect operation, always follow the instructions depicted above.

# Definition of terms used for responsible persons

## Specialist

A qualified person is defined as a service engineer or a person who fulfils the following requirements:

- A completed vocational qualification that demonstrably proves their professional expertise. This proof should consist of a vocational qualification or a similar document.
- Professional experience indicating that the qualified person has gained practical experience of industrial trucks over a proven period during their career During this time, this person has become familiar with a wide range of symptoms that require checks to be carried out, such as based on the results of a hazard assessment or a daily inspection
- Recent professional involvement in the field of the industrial truck test in question and an appropriate further qualification are essential. The qualified person must have experience of carrying out the test in question or of carrying out similar tests. Moreover, this person must be aware of the latest technological developments regarding the industrial truck to be tested and the risk being assessed

## Operating company

The operating company is the natural or legal person or group who operates the truck or on whose authority the truck is used.

The operating company must ensure that the truck is only used for its proper purpose and in compliance with the safety regulations set out in these operating instructions.

The operating company must ensure that all users read and understand the safety information.

The operating company is responsible for the scheduling and correct performance of regular safety checks.

We recommend that the national performance specifications are adhered to.

## Drivers

This truck may only be driven by suitable persons who are at least 18 years of age, have been trained in driving, have demonstrated their skills in driving and handling loads to the operating company or an authorised representative, and have been specifically instructed to drive the truck. Specific knowledge of the truck to be operated is also required.

The training requirements under §3 of the Health and Safety at Work Act and §9 of the plant safety regulations are deemed to have been satisfied if the driver has been trained in accordance with BGG (General Employers' Liability Insurance Association Act) 925. Observe the national regulations for your country.

### Driver rights, duties and rules of behaviour

The driver must be trained in his rights and duties.

The driver must be granted the required rights.

The driver must wear protective equipment (protection suit, safety footwear, safety helmet, industrial goggles and gloves) that is appropriate for the conditions, the job and the load to be lifted. Solid footwear should be worn to ensure safe driving and braking.

The driver must be familiar with the operating instructions and have access to them at all times.

The driver must:

- have read and understood the operating manual
- have familiarised himself with safe operation of the truck
- be physically and mentally able to drive the truck safely

**⚠ DANGER**

**The use of drugs, alcohol or medications that affect reactions impair the ability to drive the truck!**

Individuals under the influence of the aforementioned substances are not permitted to perform work of any kind on or with the truck.

## Prohibition of use by unauthorised persons

The driver is responsible for the truck during working hours. He must not allow unauthorised persons to operate the truck.

When leaving the truck, the driver must secure it against unauthorised use, e.g. by pulling out the key.

# Basic principles for safe operation

## Insurance cover on company premises

The company premises are very often restricted public traffic areas.

NOTE

It is advisable to review the operational liability insurance so that insurance covers the truck with respect to third parties in the event of damage caused in restricted public traffic areas.

## Modifications and retrofitting

If the industrial truck will be used for work that is not listed in the directives or in these instructions, the industrial truck must be converted or retrofitted for this purpose as required. Any structural modification can impair the handling and stability of the industrial truck, and can result in accidents.

Any modifications that adversely affect stability, load capacity and the circumferential view from the industrial truck require written approval by the manufacturer.

The following components may only be modified with prior written approval from the manufacturer:

- Brakes
- Steering
- Operating devices
- Safety systems
- Equipment variants
- Attachments

The industrial truck may be converted only with written approval by the manufacturer. If necessary, obtain approval from the relevant authorities.

– Only the authorised service centre is permitted to perform welding work on the industrial truck.

We warn against installing and using restraint systems that have not been approved by the manufacturer.

– Contact the authorised service centre before converting or retrofitting the truck.

Only the authorised service centre is permitted to perform welding work on the industrial truck.

**⚠ DANGER**

**Risk of explosion from additional holes in the area surrounding the battery!**

Explosive gases can escape and can lead to potentially fatal injuries if they explode. Sealing bores with plugs is not sufficient to prevent gas from escaping.

– Do not drill holes in the area surrounding the battery.

The operating company is permitted to make modifications to the industrial truck independently only if the manufacturer goes into liquidation and is not taken over by another legal person.

The operating company must also fulfil the following prerequisites:

- Design documents, test documents and assembly instructions associated with the modification must be permanently archived and remain accessible at all times.
- The capacity rating plate, the decal information, the hazard warnings and the operating instructions must be checked to ensure that they are consistent with the modifications and must be amended if required.
- Modifications must be designed, checked and implemented by a design office that specialises in industrial trucks. The design office must comply with the standards and directives valid at the time that modifications are made.

Decal information with the following data must be permanently affixed to the industrial truck so that it is clearly visible:

- Type of modification
- Date of modification
- Name and address of the company that carried out the modification

## Changes to the overhead guard and roof loads

**⚠ DANGER**

**In the event of the overhead guard failing due to a falling load or the truck tipping over, there are potentially fatal consequences for the driver. There is a risk to life!**

Welding and drilling on the overhead guard changes the material characteristics and the structural design of the overhead guard. Excessive forces caused by falling loads or the truck tipping over may result in buckling of the modified overhead guard and no protection for the driver.

– Do not perform welding on the overhead guard.
– Do not perform drilling on the overhead guard.

**⚠ CAUTION**

Heavy roof loads damage the overhead guard!

To ensure the stability of the overhead guard at all times, a roof load may only be mounted on the overhead guard if the structural design has been tested and the manufacturer has given approval.

– Seek advice from the authorised service centre for the mounting of roof loads.

## Warning regarding non-original parts

Original parts, attachments and accessories are specially designed for this truck. We draw your attention to the fact that parts, attachment parts and accessories supplied by other companies have not been tested or approved by STILL.

**⚠ CAUTION**

The installation or use of such products may have a negative impact on the design of the truck and thus impair active or passive driving safety.

We recommend that you obtain approval from the manufacturer and, if applicable, from the relevant regulatory authorities before installing such parts. The manufacturer accepts no liability for any damage caused by the use of non-original parts and non-original accessories.

## Damage, faults

Any damage or faults observed on the truck or the accessories must be reported immediately to the responsible personnel. The truck and accessories must never be used before they are correctly reconditioned as they cannot be guaranteed to be safe for operating or driving.

The safety mechanisms and switches must never be removed or disabled. The predefined setpoint values must not be modified.

Work on the electric installation (e.g. connecting a radio, additional lights or other accesso-

ries) is permitted only with the approval of the manufacturer.

## Medical devices

The operation of medical devices, for example pacemakers or hearing aids, can be impaired. Check with your doctor or manufacturer if the medical devices are sufficiently protected against electromagnetic interference.

## Battery connection cables

**⚠ CAUTION**

Using sockets with NON-ORIGINAL battery connection cables can be dangerous (see purchase references in the parts catalogue)

## Wheels and tyres

**⚠ DANGER**

**Risk to stability!**

Failure to observe the following information and instructions can lead to a loss of stability. The truck may tip over — risk of accident!

The following factors can lead to a loss of stability and are therefore **prohibited**:

- Wheels not approved by the manufacturer
- Excessive wear to the tyres
- Tyres of inferior quality
- Changes to the wheel rims
- Combination of wheels from different manufacturers

The following rules must be observed to ensure stability:

- Only use wheels with equal and permitted levels of wear to the tyres.
- Only use tyres of the original tyre type.
- Only use wheels approved by the manufacturer.
- Only use high-quality products.

When changing wheels, always ensure that this does not cause the truck to tilt to one side

(e.g. always replace right and left wheels at the same time). Changes must only be made following consultation with the manufacturer.

Wheels approved by the manufacturer can be found on the spare parts list. If other wheels are to be used, authorisation from the manufacturer must be obtained beforehand.

– Contact your authorised service centre regarding this matter.

## Damage, defects and misuse of safety systems

Damage or other defects on the truck or attachment must be reported to the supervisor or responsible fleet manager immediately so that they can have the defect rectified.

Trucks and attachments that are not functional or safe to drive may not be used until they have been properly repaired.

Do not remove or deactivate safety systems and switches.

Fixed set values may only be changed with the approval of the manufacturer.

Work on the electrical system (e.g. connecting a radio, additional headlights etc.) is only permitted with the manufacturer's written approval. All electrical system interventions must be documented.

Even if they are removable, roof panels may not be removed, as they are designed to protect against small falling objects.

## Length of the fork arms

**⚠ DANGER**

**Risk of accident due to the incorrect selection of fork arms!**

– The fork arms must match the depth of the load.

If the fork arms are too short, the load may fall off the arms after it has been picked up. In addition, be aware that the load centre of gravity may shift as a result of dynamic forces, such as braking. A load that is otherwise resting

safely on the fork arms may move forwards and fall.

If the fork arms are too long, they can catch on loading units behind the load that is to be picked up. These other loading units then fall over when the load is raised.

– For help with selecting the correct fork arms, contact the authorised service centre.

## Exercise caution when handling gas springs and accumulators

**⚠ WARNING**

Gas springs are under high pressure. Improper removal results in an elevated risk of injury.

For ease of operation, various functions on the truck can be supported by gas springs. Gas springs are complex components that are subject to high internal pressures (up to 300 bar). They may under no circumstances be opened unless instructed to do so, and may be installed only when not under pressure. If required, the authorised service centre will depressurise the gas spring in accordance with the regulations before removal. Gas springs must be depressurised before recycling.

– Avoid damage, lateral forces, buckling, temperatures over 80°C and heavy contamination.
– Damaged or defective gas springs must be changed immediately.
– Contact the authorised service centre.

**⚠ WARNING**

Accumulators are under high pressure. Improper installation of an accumulator results in an elevated risk of injury.

Before starting work on the accumulator it must be depressurised.

– Contact the authorised service centre.

# Residual risks

## Residual dangers, residual risks

Despite working with care and complying with the standards and regulations, the possibility of other dangers arising when using the truck cannot be ruled out.

The truck and all other system components comply with current safety requirements. Even when the industrial truck is used in accordance with its intended use and all instructions provided are followed, some residual risk cannot be excluded.

A residual risk cannot be excluded even beyond the narrow limits of the danger area that the truck itself represents. In order to be able to react immediately in the event of a malfunction, an incident, a breakdown etc., persons in the danger area must pay increased attention to the truck.

**⚠ WARNING**

All persons in the danger area of the truck must be aware of the dangers posed by the truck.

In addition, your attention is drawn to the safety regulations given in these operating instructions.

Risks can include:

- Escape of consumables due to leakages, rupture of lines and containers etc.
- Risk of accident when driving over difficult ground such as gradients, very smooth or uneven surfaces, or with poor visibility etc.
- Falling, tripping etc. on the truck, especially in wet weather, with leaking consumables or on icy surfaces
- Risk of fire and explosion from the batteries and electrical voltages
- Human error resulting from failure to observe the safety regulations
- Unrepaired damage or faulty and worn components
- Insufficient maintenance and testing
- Use of incorrect consumables
- Exceeding test intervals

If the operating company negligently or intentionally fails to comply with these require-

ments, this can lead to an accident. In this case, the manufacturer is exempt from liability.

### Stability

The stability of the truck has been tested to the latest technological standards. If the truck is used in the proper manner and in accordance with its intended use, the stability of the truck is guaranteed. These standards only take into account the dynamic and static tipping forces that can arise when used in accordance with the specified operating rules and intended use. The danger of exceeding the moment of tilt and losing stability due to improper or incorrect operation can never be ruled out.

The loss of stability can be avoided or minimised by complying with following principles:

- Always secure the load against slipping, e.g. by lashing.
- Always transport unstable loads in suitable containers.
- Always drive slowly when cornering.
- Drive with the load lowered.
- On trucks fitted with a sideshift, align and transport loads such that the load centre of gravity is positioned centrally to the truck.
- Avoid turning and diagonally driving across slopes or gradients.
- Never have the load facing downhill when travelling on slopes or gradients.
- Always take great care when transporting suspended loads.
- Do not drive over ramp edges or steps.

## Special risks associated with using the truck and attachments

Approval from the manufacturer and attachment manufacturer must be obtained each time the truck is used in a manner that falls outside the scope of normal use, and in cases where the driver is not certain that he can

use the truck correctly and without the risk of accidents.

## Overview of hazards and countermeasures

NOTE

*This table is intended to help evaluate the hazards in your facility and applies to all drive types. It does not claim to be complete.*

– Observe the national regulations for the country in which the truck is being used.

| Hazard | Course of action | Check note<br>√ done<br>- Not applicable | Notes |
|---|---|---|---|
| Truck equipment does not comply with local regulations | Testing | O | If in doubt, consult the responsible factory inspectorate or employers' liability insurance association |
| Driver's lack of skills or qualifications | Driver training (sit-on and stand-on) | O | DGUV principle 308-001<br>VDI 3313 driver's licence |
| Usage by unauthorised persons | Access with key only for authorised persons | O | |
| Truck not safe for operation | Periodic inspection and rectification of defects | O | German Ordinance on Industrial Safety and Health (BetrSichV) |
| Risk of falling when using working platforms | Compliance with national regulations (different national laws) | O | German Ordinance on Industrial Safety and Health (BetrSichV) and employer's liability insurance associations |
| Impaired visibility due to load | Application planning | O | German Ordinance on Industrial Safety and Health (BetrSichV) |
| Contamination of breathable air | Assessment of diesel exhaust gases | O | Technical Regulations for Hazardous Substances (TRGS) 554 and the German Ordinance on Industrial Safety and Health (BetrSichV) |
| | Assessment of LPG exhaust gases | O | German threshold limit values list (MAK-Liste) and the German Ordinance on Industrial Safety and Health (BetrSichV) |

| Hazard | Course of action | Check note<br>√ done<br>- Not applicable | Notes |
|---|---|---|---|
| Impermissible usage (improper usage) | Provide operating instructions | O | German Ordinance on Industrial Safety and Health (BetrSichV) and German Health and labour protection law (ArbSchG) |
| | Written notice of instruction to driver | O | German Ordinance on Industrial Safety and Health (BetrSichV) and German Health and labour protection law (ArbSchG) |
| | German Ordinance on Industrial Safety and Health (BetrSichV), observe the operating instructions | O | |
| When fuelling | | | |
| a) Diesel | German Ordinance on Industrial Safety and Health (BetrSichV), observe the operating instructions | O | |
| b) LPG | DGUV regulation 79, observe the operating instructions | O | |
| When charging the drive battery | German Ordinance on Industrial Safety and Health (BetrSichV), observe the operating instructions | O | VDE 0510-47<br>(= DIN EN 62485-3): In particular<br>- Ensure adequate ventilation<br>- Insulation value within the permissible range |
| When using battery chargers | German Ordinance on Industrial Safety and Health (BetrSichV), DGUV rule 113-001 and observe the operating instructions | O | German Ordinance on Industrial Safety and Health (BetrSichV) and DGUV rule 113-001 |
| When parking LPG trucks | German Ordinance on Industrial Safety and Health (BetrSichV), | O | German Ordinance on Industrial Safety and Health (BetrSichV) and DGUV rule 113-001 |

| Hazard | Course of action | Check note<br>√ done<br>- Not applicable | Notes |
|---|---|---|---|
| | DGUV rule 113-001 and observe the operating instructions | | |
| When operating driverless transport systems | | | |
| Roadway quality inadequate | Clean/clear roadways | O | German Ordinance on Industrial Safety and Health (BetrSichV) |
| Loading equipment incorrect/slipped | Reposition load on pallet | O | German Ordinance on Industrial Safety and Health (BetrSichV) |
| Unpredictable driving behaviour | Employee training | O | German Ordinance on Industrial Safety and Health (BetrSichV) |
| Routes blocked | Mark routes<br>Keep roadways clear | O | German Ordinance on Industrial Safety and Health (BetrSichV) |
| Routes intersect | Announce right-of-way rule | O | German Ordinance on Industrial Safety and Health (BetrSichV) |
| No person detection when placing goods into stock and removing goods from stock | Employee training | O | German Ordinance on Industrial Safety and Health (BetrSichV) |

## Danger to employees

According to the German Ordinance on Industrial Safety and Health (BetrSichV) and labour protection law (ArbSchG), the operating company must determine and assess hazards during operation, and establish the labour protection measures required for employees (BetrSichVO). The operating company must therefore draw up appropriate operating instructions (§ 6 ArbSchG) and nominate a person who is responsible for these operating instructions. Drivers must be informed of the operating instructions that apply to them.

**NOTE**

*Please note the definition of the following responsible persons: "operating company" and "driver".*

The design and equipment of the truck comply with the standards and directives required for CE conformity. The design and equipment also comply with the standards and directives necessary for the UKCA compliance that is required in the United Kingdom. The design and equipment are therefore not part of the required scope of the hazard assessment. The same applies to attachments with their own CE labelling and UKCA labelling. The operating company must, however, select the type and equipment of the trucks so as to comply with the local provisions for deployment.

The result of the hazard assessment must be documented (§ 6 ArbSchG). In the case of truck applications involving similar hazard situations, the results may be summarised. Refer to the chapter entitled "Overview of hazards and countermeasures", which provides advice on complying with this regulation. The overview specifies the primary hazards that, in the event of non-compliance, are the most frequent causes of accidents. If other major hazards are present as a result of the specific operating conditions, these hazards must also be taken into consideration.

The conditions of use for trucks are broadly similar in many plants, so the hazards can be summarised in one overview. Observe the information provided by the relevant employers' liability insurance association on this subject.

# Safety tests

## Carrying out regular inspections on the truck

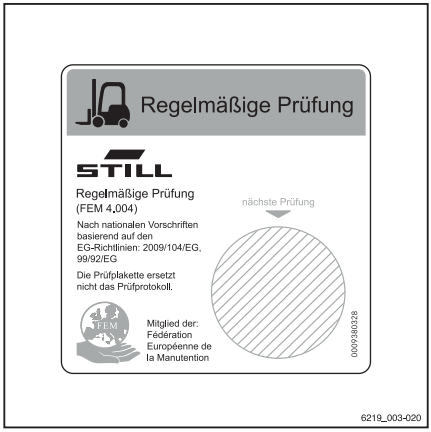


The operating company must ensure that the truck is checked by a specialist at least once a year or after particular incidents.

As part of this inspection, the technical condition of the truck must be completely tested with regard to accident safety. In addition, the truck must be thoroughly checked for damage that may have been caused by improper use. A test log must be created. The results of the inspection must be retained at least until a further two inspections have been carried out.

The inspection date is indicated by an adhesive label on the truck.

– Arrange for the authorised service centre to perform regular testing on the truck.
– Observe the guidelines for tests carried out on the truck in accordance with FEM 4.004.

The operating company is responsible for ensuring that any defects are remedied without delay.

– Notify your authorised service centre.

**NOTE**

*In addition, observe the national regulations for the country of use.*

## Insulation testing

The insulation of the truck must have sufficient insulation resistance. For this reason, insulation testing in accordance with DIN EN 1175 and DIN 43539, VDE 0117 and VDE 0510 must be conducted at least once yearly as part of the FEM testing.

The insulation testing results must be at least the test values given in the following two tables.

– For insulation testing, contact the authorised service centre.

The exact procedure for this insulation testing is described in the workshop manual for this truck.

**NOTE**

*The truck's electrical system and drive batteries must be checked separately.*

## Test values for the drive battery

| Component | Recommended test voltage | Measurements | | Nominal voltage $U_{Batt}$ | Test values |
|---|---|---|---|---|---|
| Battery | 50 VDC | Batt+<br>Batt- | Battery tray | 24 volts | > 1200 Ω |
| | 100 VDC | | | 48 volts | > 2400 Ω |
| | 100 VDC | | | 80 volts | > 4000 Ω |

## Test values for the entire truck

| Nominal voltage | Test voltage | Test values for new trucks | Minimum values over the duration of the service life |
|---|---|---|---|
| 24 volts | 50 VDC | Min. 50 kΩ | > 24 kΩ |
| 48 volts | 100 VDC | Min. 100 kΩ | > 48 kΩ |
| 80 volts | 100 VDC | Min. 200 kΩ | > 80 kΩ |

# Safety regulations for handling consumables

## Permissible consumables

**⚠ WARNING**

Consumables can be dangerous.

It is necessary to follow the safety regulations when handling these substances.

Refer to the maintenance data table for the permissible substances necessary for operation.

## Hydraulic fluid

**⚠ WARNING**

During operation of the forklift truck, hydraulic fluids are pressurised and are hazardous to your health.

- Do not spill these fluids!
- Follow the statutory regulations
- Do not allow the fluids to come into contact with hot motor parts.
- Do not allow to come into contact with the skin.
- Avoid inhaling the spray
- Penetration of pressurised fluids into the skin is particularly dangerous if these fluids escape at high pressure due to leaks in the hydraulic system. In case of such injury, seek medical advice immediately.
- To avoid injury, use appropriate personal protective equipment (e.g. protective gloves, industrial goggles, skin protection and skin care products).

**ENVIRONMENT NOTE**

Hydraulic fluid is a water-polluting substance!

Always store hydraulic fluid in containers complying with the regulations.

Avoid spilling.

Spilt hydraulic fluid should be removed with oil-binding agents at once and disposed of according to the regulations.

Dispose of old hydraulic fluid according to regulations.

## Battery acid

**⚠ WARNING**

Battery acid contains dissolved sulphuric acid. This is toxic.

- Avoid touching or swallowing the battery acid at all costs.
- In case of injury, seek medical advice immediately.

**⚠ WARNING**

Battery acid contains dissolved sulphuric acid. This is corrosive.

- When working with battery acid, use appropriate PSA (rubber gloves, apron, protection goggles).
- When working with battery acid, never wear a watch or jewellery.
- Do not allow any acid to get onto clothing or skin or into the eyes. If this does happen, rinse immediately with plenty of clean water.
- In case of injury, seek medical advice immediately.
- Immediately rinse away spilt battery acid with plenty of water.
- Follow the statutory regulations.

**ENVIRONMENT NOTE**

- Dispose of used battery acid in line with the applicable regulations.

## Disposal of consumables

**ENVIRONMENT NOTE**

*Materials that have to be disposed of following maintenance, repair and cleaning must be systematically collected and disposed of in accordance with regulations. Observe the national regulations for your country. Work may only be carried out in areas designated for this purpose. Take care to minimise, as far as possible, any impact on the environment.*

- Any spillage of fluids such as hydraulic oil, brake fluid or gear lubricant oil must be immediately soaked up with an oil-binding agent.
- The regulations for disposal of used oil are applicable.
- Any spillage of battery acid must be neutralised immediately.

## Noise level

This value has been determined based on EN12053 driving, lifting and idle test methods.

Noise level at the driver's ear:

| | 3-wheel model (3W) | 4-wheel model (4W) |
|---|---|---|
| 1.5–2.0 tonne model (without driver's cab) | $L_{pAZ}$ = 68.0 dB(A) | $L_{pAZ}$ = 66.0 dB(A) |
| Uncertainty | $K_{PA}$ = 4 dB(A) | $K_{PA}$ = 4 dB(A) |

NOTE

*The noise level may be higher or lower than this value when operating the forklift truck. Differing tasks and external factors may lead to an increase in noise levels.*

# Frequency characteristics for vibrations imparted to the human body

This value has been determined from experiments using standard equipment based on technical data in the EN13059 and EN12096 standards (driving over test course with bumps).

Whole-body vibration transmitted to driver with standard seat:

| | 3W | 4W |
|---|---|---|
| $a_{W,ZS}$(m/s$^2$) | 1.5 | 1.5 |
| Uncertainty K (m/s$^2$) | 0.5 | 0.5 |

NOTE

*The indicated vibration frequency imparted to the human body cannot be used to determine the actual frequency load when operating the truck. This frequency load depends on operating conditions (road surface conditions, operating modes etc.) and must therefore be determined according to site conditions, if necessary.*

# Emergency exit from driver's cab with windows

**⚠ CAUTION**

If the truck is equipped with a driver's cab with doors, DO NOT open the doors until the load is placed on the floor.

**NOTE**

*If the truck has a driver's cab with a door, a window and glass, it is difficult for the driver to open the door from the side when the truck encounters a fault in narrow passages. In the event of such dire danger, the driver can exit the truck via the rear window.*

– Unlock the rear window of the driver's cab. ▷

– Push the window outwards until it opens.

– Climb out carefully.

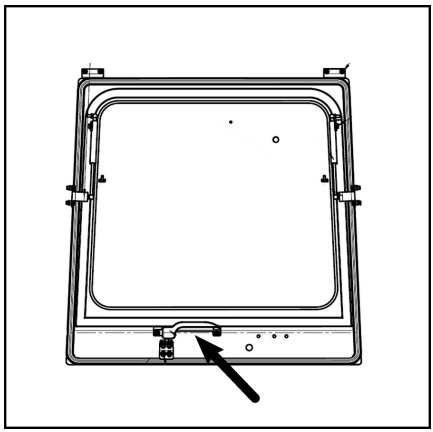

## Manually lowering the fork arms with ISO

The control valve is equipped with an emergency lowering screw (1) for manual lowering of the fork carriage. This may be required if a malfunction occurs in the hydraulic system. The control valve is located under the control lever on the right-hand side of the truck and is equipped with an emergency lowering screw.

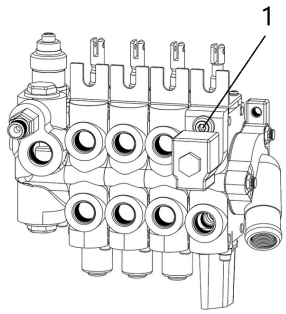

E129304016

**⚠ DANGER**

**Do not stand in the vicinity of the forks when the fork arms are being lowered.**

During lowering, leave the socket wrench on the screw on the valve block to enable lowering to be stopped at any time.

- Remove the foot plate and the joystick base cover.
- Slowly turn the emergency lowering screw about 1.5 turns anticlockwise using a hexagon socket wrench.
- Gently push the joystick until the forks are completely lowered.
- After it is lowered, turn back the emergency lowering screw clockwise with 40 Nm tightening torque. Otherwise, you cannot use the joystick to operate the fork carriage.
- Refit the foot plate and the joystick base cover.

## Safety guidelines for using the truck

- The operator must be trained and qualified according to national regulations. The operator must have knowledge of the operation and performance of the truck. The operator must use the truck with due care in accordance with their driving ability and experience.
- Any defect (squeaking, leaks etc.) must be promptly reported because, if neglected, it could cause more serious malfunctions.
- Carry out the checks indicated in the "Daily checks" chapter.

**ENVIRONMENT NOTE**

*Report any oil and/or battery fluid leaks: they are dangerous and highly polluting.*

**⚠ CAUTION**

If you notice a burning smell, stop the truck and press the emergency stop button.

# Safety regulations when driving

## Driving conduct

The driver must follow the public rules of the road when driving in company traffic.

The speed must be appropriate to the local conditions.

For example, the driver must drive slowly around corners, in tight passageways, when driving through swing-doors, at blind spots, or on uneven surfaces.

The driver must always maintain a safe braking distance from vehicles and persons in front, and must always have the truck under control. Stopping suddenly, turning quickly and overtaking at dangerous or blind spots must be avoided.

– Initial driving practice must be carried out in an empty space or on a clear roadway.

The following are forbidden during driving:

- Allowing arms and legs to hang outside the truck
- Leaning the body over the outer contour of the truck
- Climbing out of the truck
- Moving the driver's seat
- Adjusting the steering column
- Releasing the seat belt
- Disabling the restraint system
- Raising the load higher than 300 mm above the ground (with the exception of manoeuvring processes during the placement into stock/removal from stock of loads)
- Using electronic devices, for example radios, mobile phones etc.

**⚠ WARNING**

The use of multimedia and communication equipment as well as playing these devices at an excessive volume during travel or when handling loads can affect the operator's attention. There is a risk of accident!

– Do not use devices during travel or when handling loads.

– Set the volume so that warning signals can still be heard.

**⚠ WARNING**

In areas where use of mobile phones is prohibited, use of a mobile phone or radio telephone is not permitted.

– Switch off the devices.

### Visibility when driving

The driver must look in the drive direction and have a sufficient view of the driving lane.

Particularly for reverse travel, the driver must be sure that the driving lane is clear.

When transporting goods that impair visibility, the driver must drive the truck in reverse.

If this is not possible, a second person acting as a guide must walk in front of the truck.

In this case the driver must only move at walking pace and with extra care. The truck must be stopped immediately if eye contact with the guide is lost.

Rear-view mirrors are only to be used for observing the road area behind the truck and not for reverse travel. If visual aids (mirror, monitor) are necessary to achieve sufficient visibility, it is necessary to practise using them. For reverse travel using visual aids, extra care should be taken.

When using attachments, special conditions apply; see the chapter entitled "Fitting attachments".

Any glass (variant, e.g. windscreen) and mirrors must always be clean and free of ice.

## Safety regulations in case of accidental lateral tipping

If as a result of incorrect manoeuvring the truck appears to be tipping over sideways, carefully follow the instructions below:

a) Do not leave the forklift truck.

b) Tilt your head forward and move your body in the opposite direction to which the forklift is tipping.

c) Remain firmly seated, grip the steering wheel and dig your heels in. Wait until the truck has reached a stable position before leaving the truck.

# 3

# Overview

# General view

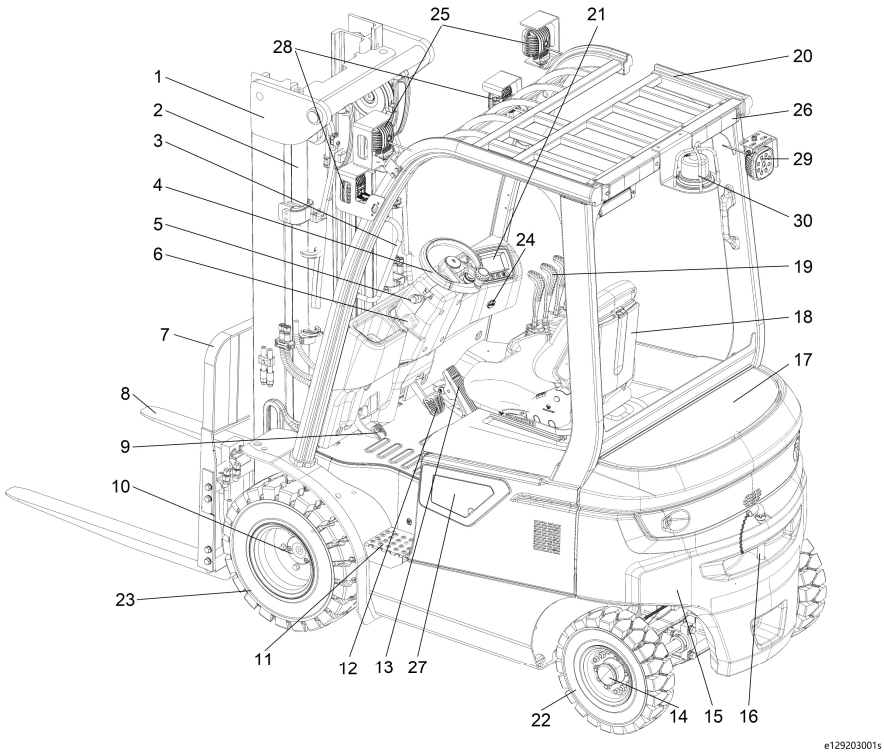


| | |
|---|---|
| 1 | Lift mast |
| 2 | Lift cylinder |
| 3 | Handhold |
| 4 | Steering wheel |
| 5 | Reversing handle |
| 6 | Steering column adjustment screw |
| 7 | Fork carriage |
| 8 | Forks |
| 9 | Parking brake pedal |
| 10 | Drive axle |
| 11 | Non-slip tread |
| 12 | Brake pedal |
| 13 | Accelerator pedal |
| 14 | Steering axle |
| 15 | Counterweight |
| 16 | Towing pin |
| 17 | Rear cover |
| 18 | Driver's seat |
| 19 | Multilever |
| 20 | Overhead guard |
| 21 | Display unit |
| 22 | Rear wheel |
| 23 | Front wheel |
| 24 | USB interface |
| 25 | LED headlights |
| 26 | Tail lights |
| 27 | Charging port (*for lithium-ion battery model ) |
| 28 | Headlights, turn signal lights |
| 29 | LED rear lights |
| 30 | Flashing light |

## Steering axle type

As shown in the figure on the right, the number (1) shows a 4 wheel (4W) counterweight trucks, and the number (2) shows a 3 wheel (3W) counterweight trucks.

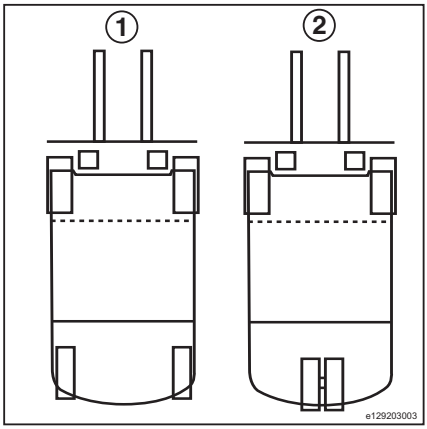


– 3 wheel (3W) Counterweight forklift equipped with a compact steering axle as shown on the right.

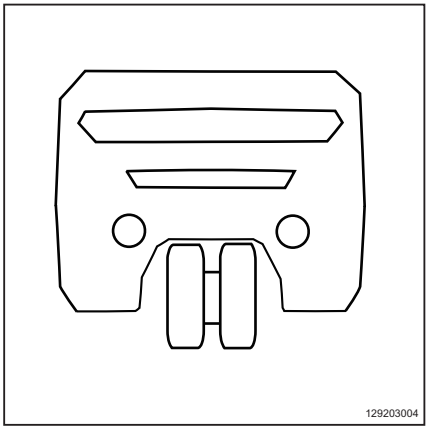

## Steering axle type

– 4 wheel (4W) Counterweight forklift equipped with a swing steering axle as shown on the right. ▷

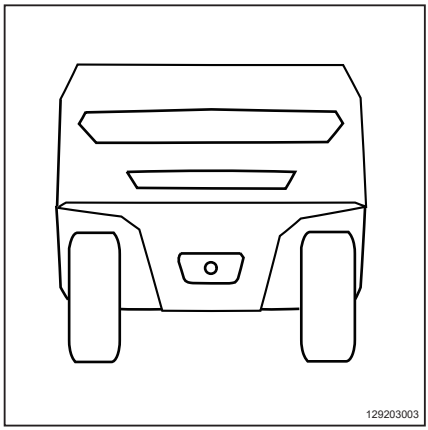

# General view of driver's compartment

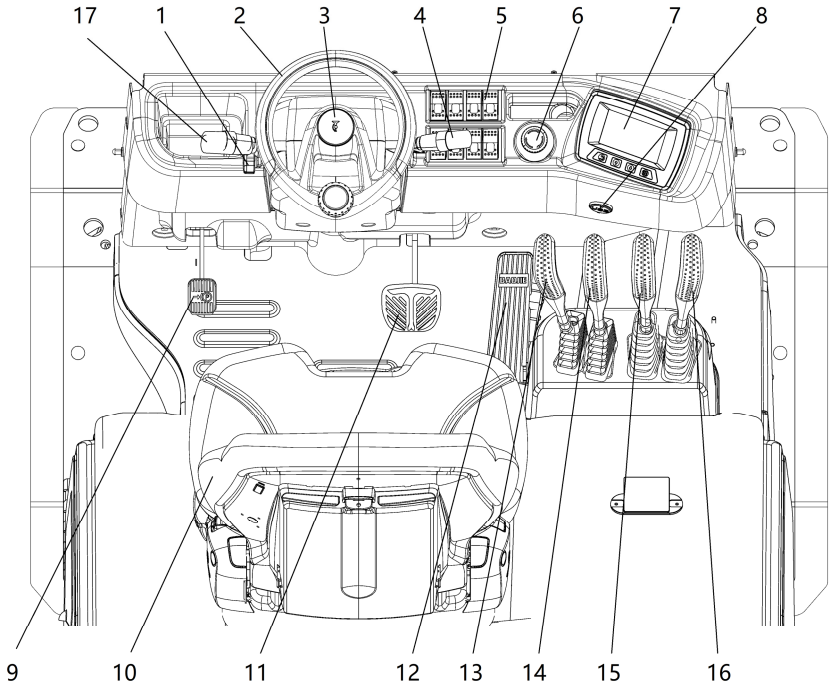


e129203002s

| | |
|---|---|
| 1 | Steering column adjustment screw |
| 2 | Steering wheel |
| 3 | Horn button |
| 4 | Lighting control handle |
| 5 | Switch panel |
| 6 | Emergency off switch |
| 7 | Display unit |
| 8 | USB interface |
| 9 | Parking brake pedal |
| 10 | Driver's seat |
| 11 | Brake pedal |
| 12 | Accelerator pedal |
| 13 | Lifting device lever |
| 14 | Tilting device lever |
| 15 | Attachment lever (optional) |
| 16 | Attachment lever (optional) |
| 17 | Drive direction selection lever |

# Warning Label Diagram

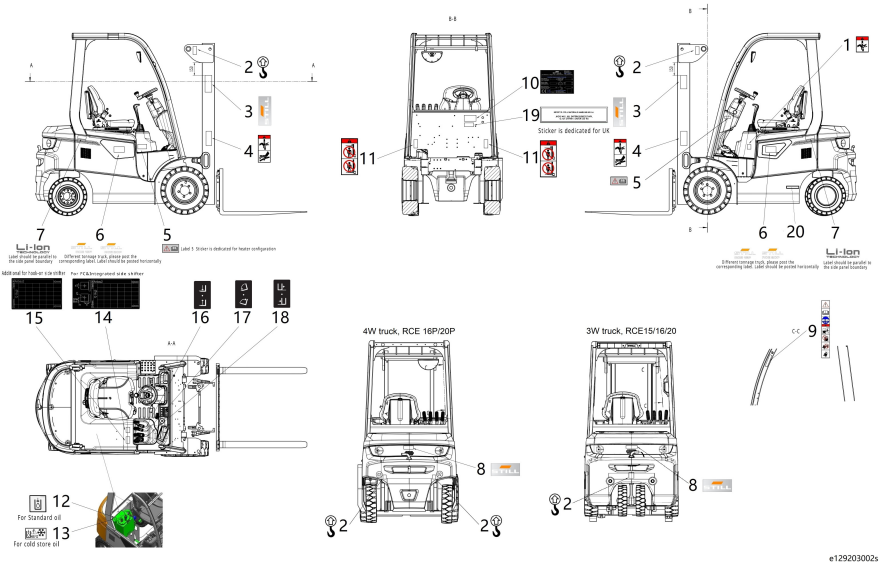


| | | | |
|---|---|---|---|
| 1 | Label, Anti-pinch | 11 | Label, Do not stand above or below the fork. |
| 2 | Label, Hoisting points | 12 | Label, Fill hydraulic oil (standard oil) |
| 3 | Label text, Still | 13 | Label, Fill hydraulic oil (cold store oil) |
| 4 | Label Anti-pinch / Prevent high pressure oil shooting injury. | 14 | Label, capacity rating plate ( For FC&Integrated side shifter ) |
| 5 | Label, Read the operating manual ( For heater configuration) | 15 | Label, capacity rating plate ( For hook-on side shifter ) |
| 6 | Label text, Still + RCE16P/RCE20P | 16 | Label, Lifting/Lowering |
| 7 | Label,Li-ion technology (*Li-ion truck) | 17 | Label,Side shifting |
| 8 | Label text, Still | 18 | Label, Lifting/Lowering/Tilting |
| 9 | Label, Driving warning | 19 | Label, UK-Importer (for use in UK only) |
| 10 | Label, Nameplate | 20 | Chassis number |

1

2

3

4

5

6


7


8

10 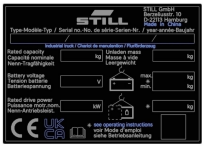

11

9


12


For Standard oil

13


For cold store oil

14 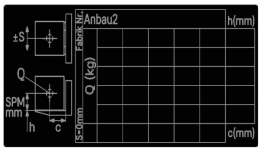


Additional for hook-on side shifter

15


For FC&Integrated side shifter

16

17

18

19


e129203003s

# Display unit

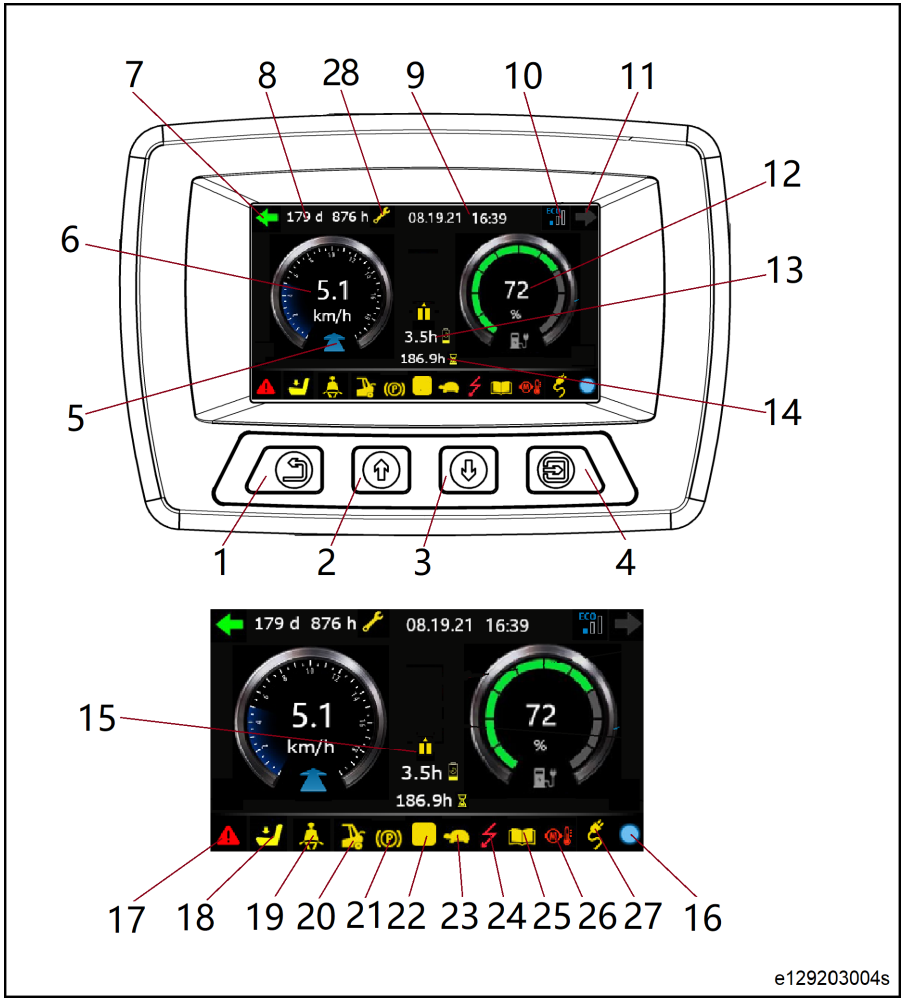


1 Back button
2 Up button
3 Down button
4 Enter/modify button
5 Direction
6 Speed
7 Left turn indicator (the green arrow appears when the drive direction selection lever is in left turn position).
8 Maintenance time
9 Date
10 Performance mode (PER: Performance, EFF: Efficiency, ECO: Economy)
11 Right turn (the green arrow appears when the drive direction selection lever is in right turn position).
12 Battery
13 Remaining battery run time
14 Hour meter
15 Rear tyre direction (steering angle display for 3W truck)

16 CAN communication symbol (Blue - normal CAN communication; red - abnormal CAN communication)
17 Error symbol
18 Operator symbol (When this symbol lights up, it indicates that the driver should sit in the seat )
19 Fasten seat belt symbol
20 Battery cover open symbol
21 Parking brake symbol
22 Neutral yellow warning (Lights up whenever an operating element ins not in the neutral position when the truck key switch is opened.)
23 Creep speed mode
24 Control unit failure
25 Refer to truck documentation
26 Motor temperature too high (yellow)/overheated (red)
27 Battery charging symbol
28 Maintenance indicator (lights up when maintenance is due)

# Switch panel

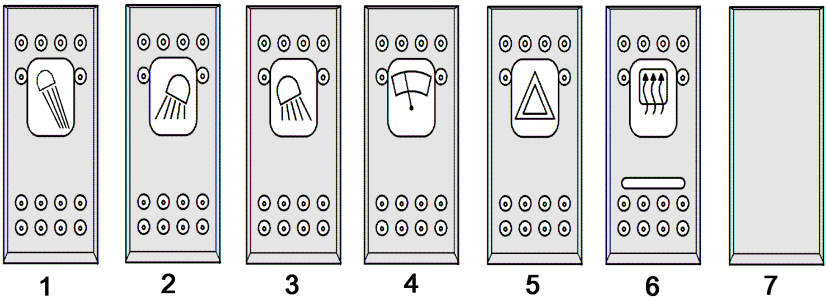


1 Blue light
2 Front working spotlight
3 Rear working spotlight
4 Front windscreen wiper/rear window wiper - interval/on/wipe-wash
5 Warning lights
6 Screen heating push button
7 Others are unassigned

**⚠ CAUTION**

The above switches may be displayed, depending on your actual configuration.

# Relays and fuses overview

## Relay

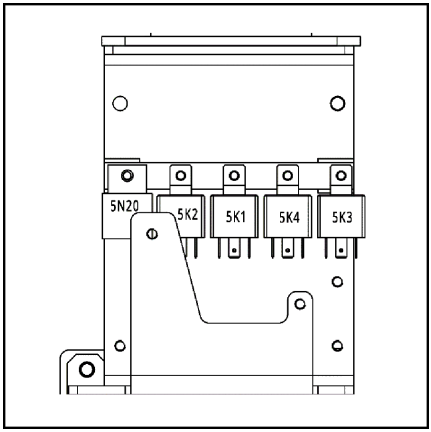


| Signs | Function |
|---|---|
| 5N20 | Flasher |
| 5K2 | Reversing relay |
| 5K1 | Parking relay |
| 5K4 | Motor fan relay |
| 5K3 | Module fan relay |

## Fuses

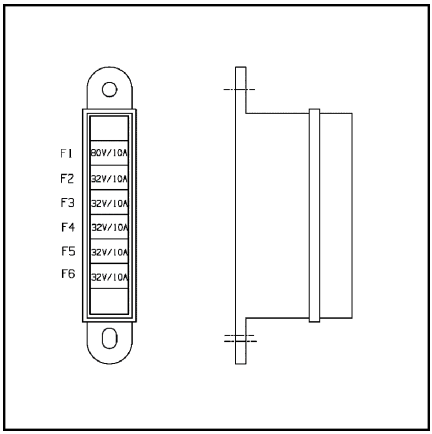


| Signs | Specifications | Function |
|---|---|---|
| F1 | 80V/10A | Key and main contactor signal |
| F2 | 32V/10A | Module control unit and drive motor speed sensor |
| F3 | 32V/10A | Display unit, diagnostics |
| F4 | 32V/10A | Horn, fan, flasher |
| F5 | 32V/10A | Brake lights, USB charging port, reversing lights, reversing beeper, combination switch |
| F6 | 32V/10A | BMS auxiliary battery |

# 4

# Operation

# Service plan before first start

| |
|---|
| **Drive mechanism and transmission system** |
| Check the drive axle/transmission gear oil level. |
| Check and tighten the wheel nuts. |
| Check the tyre pressure (if fitted with optional pneumatic tyres). |
| Check the functionality of the service brake and parking brake. |
| Check the drive functions (forward and reverse). |
| Check steering system functionality. |
| Check the brake fluid level. |
| **Electrical system** |
| Check rechargeable battery condition, electrolyte level and specific gravity. For the lithium-ion battery (*option), refer to the lithium-ion battery operating instructions supplied with the forklift truck. |
| Check electrical systems (e.g. lighting, warning equipment and other special equipment). |
| Check the emergency off switch. |
| **Hydraulics** |
| Check the hydraulic oil level. |
| **Lifting system** |
| Check the functionality of the lift mast and attachments. |

# Instructions for running-in

The truck can be operated immediately.

However, when driving during the first 50 operating hours, avoid subjecting both the working hydraulics and the drive unit to high continuous loads.

# Pre-shift checks

Carrying out the following checks as part of your daily routine will help to keep the forklift truck in good condition. These checks are supplemental and do not replace periodic maintenance work.

**NOTE**

*If, when carrying out the daily checks, you discover a defect or you are unsure whether the truck will function properly, do not use the truck and contact the technical service department.*

# Daily inspection items

| |
|---|
| **Drive mechanism and transmission system** |
| Check the tyre and rim (for damage to the profile and outer section). |
| Check the drive axle/transmission gear oil level. |
| Check the tyre pressure (if fitted with optional pneumatic tyres). |
| Test the functionality of the service brake and parking brake. |
| Check the steering. |
| Check the brake fluid level. |
| **Driver's cab** |
| Check the condition and functionality of the driver's seat and seat belt. |
| Check the seat switch is working normally. |
| Check the steering column adjustment is secure. |
| **Electrical system** |
| Check the battery according to the manual provided by the battery manufacturer. |
| Check electrical systems (e.g. lighting, warning equipment and other special equipment). |
| Check the operating state of the key switch. |
| Check the contacts. |
| Have damaged battery male connectors replaced by the authorised service partners. |
| Inspect the battery male connector and the plug connection for moisture or any foreign objects that may have become lodged and remove as necessary, e.g. using compressed air. |
| Perform a visual inspection for integrity of the battery cable. Have a damaged battery cable replaced by the authorised service partners. |
| **Hydraulic system** |
| Check the oil level. |
| Visually inspect the truck for leaks. |
| **Lifting system** |
| Check the safety fittings on the fork arms and carriage. |
| **Special equipment** |
| Check wear and functionality of the sideshift and attachments (in accordance with the procedures stipulated by the manufacturer). |
| Check the condition of the antistatic belt and earth (only when using tyres that are not antistatic). |
| **Subsequent tasks** |
| Carry out a functional test and test drive |

# Periodic inspection items

**⚠ CAUTION**

Carrying out periodic inspections of the vehicle is supplemental to periodic servicing work and plays an important role in keeping the vehicle in good working order.

Please carry out periodic inspections according to the content of the **"Table of first service checks"** chapter (except for changing the gear oil).

It is recommended to perform an inspection every 1000 hours. This interval can be shortened accordingly based on the operating conditions.

**NOTE**

*If, when carrying out checks, you discover a defect or you are unsure whether the truck will function properly, do not use the truck, and contact your authorised service partners.*

# Troubleshooting guide

**NOTE**

*The table below only lists some common faults and is not an exhaustive list. When a fault occurs on the truck, we recommend that you contact an authorised service partners to fix the fault as soon as possible.*

| Fault | Possible reason | Solution |
|---|---|---|
| Unable to drive the truck | 1. The battery plug is not connected. | 1. Check the battery plug and connect it if necessary. |
| | 2. The emergency off switch is pressed. | 2. Pull up the emergency off switch. |
| | 3. The key switch is in position "0". | 3. Put the key switch to position "1". |
| | 4. The seat switch is not closed. | 4. Check the seat switch and contact an authorised deal if necessary. |
| | 5. The fuse is blown. | 5. Check the fuse and replace if necessary. |
| | 6. The fault indicator of the display unit lights up and an error code is shown. | 6. Contact your authorised service partners. |
| Unable to lift a load | 1. The truck is not ready for operation. | 1. Perform all the fixes listed in the section "Unable to drive the truck". |
| | 2. The hydraulic oil level is too low. | 2. Check the hydraulic oil level and top up. |
| | 3. The load weight is excessive. | 3. Respect the rated load. |
| Truck driving at low speed | 1. The parking brake is not released. | 1. Check if the parking brake is fully released. |
| | 2. The foot brake is not released. | 2. Check if the foot brake is stuck and lubricate the foot brake connection points. |
| | 3. The battery level is low | 3. Check the battery level and charge the battery if necessary. |
| | 4. The fault indicator of the display unit lights up and an error code is shown. | 4. Contact your authorised service partners. |

# Mounting/dismounting

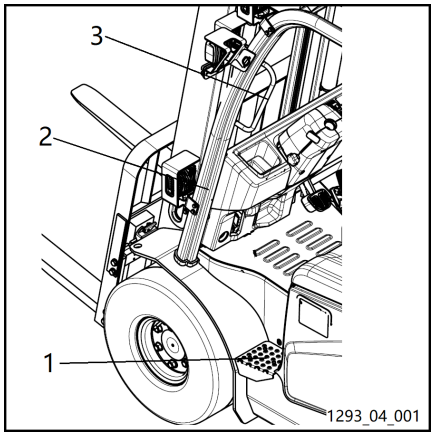


**⚠ WARNING**

Always face the vehicle when climbing off the forklift to prevent injury to legs and back.

**NOTE**

*Do not grip the steering wheel or joysticks when climbing on/off the forklift.*

After completing the daily checks on the forklift truck, carry out the following procedure to begin using it:

- First place your left foot on the non-slip tread (1). Grip the handhold (3) or overhead guard beam (2), and mount the truck from the left-hand side.
- Use the non-slip tread (1) and handhold (3) or overhead guard beam (2) to dismount from the left-hand side.

**⚠ WARNING**

Do not mount or dismount the truck from the right-hand side unless it is an emergency.

**⚠ CAUTION**

For safety reasons, it is not advisable to operate the forklift when the non-slip tread and floormat are removed or missing. Please ensure that the non-slip tread and floormat are clean.

# Seat belt status and performance checks

## Checking condition and performance

**⚠ DANGER**

**For safety reasons, the condition and protective ability of the seat belt must be checked on a daily basis.**

Do not operate the vehicle with the seat belt removed.

**⚠ CAUTION**

Carefully check that the retractor locking device, the seat belt locking device and the connections between the seat belt/seat and the seat/cover panel are all in good condition.

– Check the condition of the belt: pull the seat belt all the way out of the retractor and check the seat belt for damage.

**⚠ CAUTION**

The seat belt must be replaced if it is cracked, worn or has been damaged in an accident. When replacing a seat belt, the entire protection system must also be replaced, including the seat belt, latchplate, retractor and locking devices.

– Check the buckle locking device by inserting the latchplate of the seat belt into the buckle until you hear a click. Ensure that the latchplate, buckle and other locking devices are functioning properly.

– Carefully check the connection between the seat belt and the seat.

– Carefully check the connection between the seat and the panel cover below.

## Adjusting the seat and seat belt ▷

**⚠ CAUTION**

An incorrect seat setting may cause damage to the driver's back.

The adjustment controls for the driver's seat should not be used during operation.

Before starting the truck and whenever changing drivers, adjust the seat to correspond to the driver's weight and make sure that the settings have all engaged properly.

Do not place any objects in the driver's working area.

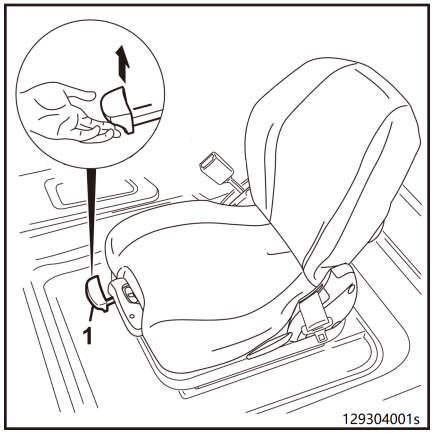

**⚠ WARNING**

Risk of accident from sudden adjustment of the seat or of the seat backrest! The inadvertent adjustment of the seat or of the seat backrest can lead to uncontrolled movements by the driver. The steering or the operating devices can then be actuated unintentionally. This may cause uncontrolled movements of the truck or of the load.

- Do not adjust the seat or the seat backrest while the truck is in motion.
- Adjust the seat and the seat backrest so that all operating devices can be actuated safely.
- Ensure that the seat and the seat backrest are securely engaged.

## Adjusting the seat longitudinally

**⚠ CAUTION**

There is a risk of crushing the hand if the lever is grasped fully during adjustment.

Only grasp the handle by the guide provided for this purpose.

- Pull the adjustment handle (1) up.
- Move the seat forwards or backwards along the seat guide until the optimum position between driver, steering wheel, accelerator pedal and operating levers is found.
- Retract the adjustment handle (1).

## Setting the driver's weight

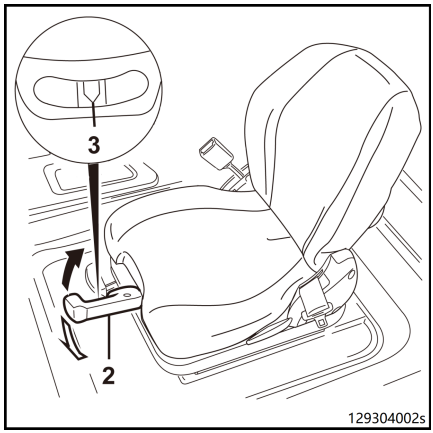


**NOTE**

*The individual driver's weight must be set with the driver sitting in the seat.*

- Pull out the adjustment handle (2).

Move the adjustment handle and set the suspension spring in accordance with the driver's weight.

- The correct driver's weight has been selected when the arrow is in the centre of the inspection window (3).

Move up the adjustment handle (2) to increase the set weight.

Move down the adjustment handle (2) to decrease the weight.

NOTE

*Sitting for long periods of time puts a lot of pressure on the spine. Try to compensate for this by performing regular simple gymnastic movements.*

## Adjusting the seat backrest

▷

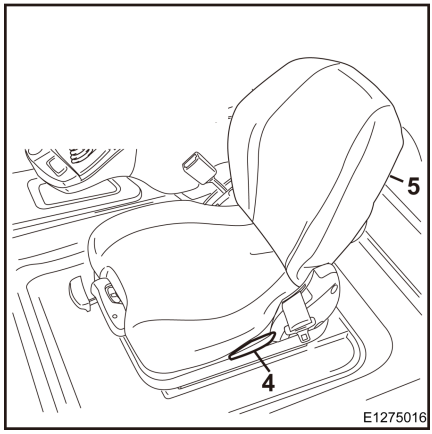


- Adjust the backrest using the seat backrest adjuster (4).
- Pull up the seat adjuster (4) and fix in place.
- Move the seat backrest (5) forwards or backwards until a comfortable position for the driver is found.
- Release the seat adjuster (4) to return the seat backrest (5) to its original position.

## Fastening the seat belt

**DANGER**

**There is a risk to life if the driver loses control of the vehicle.**

The seat belt must be worn at all times that the truck is driven!

The seat belt must only be used by one person at any time.

**CAUTION**

The seat belt must be in working order.

Ensure that the seat belt is not twisted, stuck or knotted.

Protect the buckle and retractor to prevent foreign objects or dirt entering and to prevent damage.

**NOTE**

*Even for the driver's cab to fully comply with driver safety systems, the driver should also wear the seat belt all the time.*

- *When the truck is on a steep incline, the automatic latch on the seat belt will engage, which will prevent the wearer from unfastening the belt.*
- *The only way to disengage the automatic latch on the seat belt is to carefully level the truck.*
- *When the forklift truck is being operated (when driven or during lifting etc.), the driver should remain in the seat and lean back onto the backrest.*
- *The automatic latch in the retractor will ensure that the driver has sufficient freedom of movement when operating the truck.*

– Slowly pull the seat belt (3) out from the retractor (1).

– Place the seat belt around the waist, no higher than the abdomen.

– Press the seat belt latch plate (2) into the latch (4).

– Check the tightness of the seat belt; the belt should firmly hug the body.

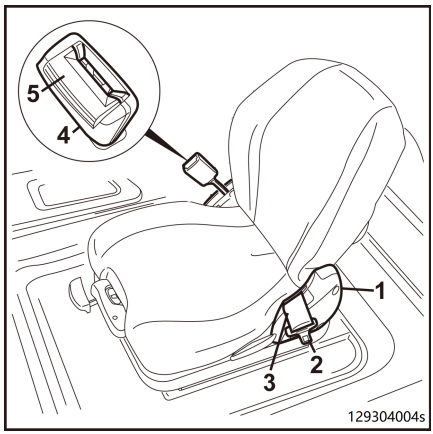


**DANGER**

**Do not fasten the seat belt over hard or fragile items in the driver's pockets as this may result in accidents.**

Do not place objects between the body and the belt.

## Unfastening the seat belt

– Press the red button (5) on the seat belt latch (4) to release the seat belt.

– Manually feed the seat belt latchplate (2) into the retractor (1).

**NOTE**

*Moving the seat belt too quickly may cause the latchplate to catch on the automatic latch and housing, thus engaging the automatic lock. In this case, the seat belt cannot be pulled out using normal force.*

## Seat belt monitoring and alarm function ▷

**DANGER**

**The driver must sit in the driver's seat when operating the forklift truck.**

The seat belt must be worn at all times that the truck is driven!

If the forklift truck is started without fastening the seat belt, the LED light shown by the arrow will flash on the display unit and the forklift truck can continue driving.

If the seat belt is unfastened while the forklift truck is travelling, the LED light shown by the arrow in the display unit will flash. If the vehicle speed is above 4 km/h at this time, the beeper will also sound.

Different monitoring modes can be set using the diagnostic software so that the forklift truck gradually slows down to a standstill (0 km/h) or is restricted to creep speed (2 km/h).

**NOTE**

*The seat belt monitoring mode can be set using the diagnostic software. Please contact your authorised service partners.*

**CAUTION**

This function is supported by trucks with conformity certification.

# Operating the horn

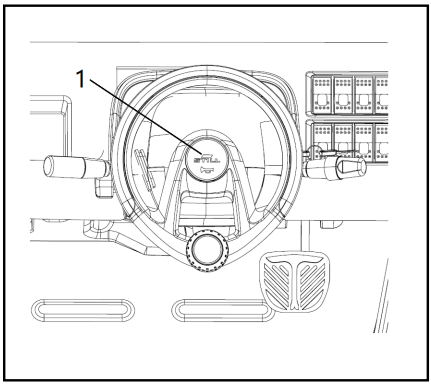


Sound the horn as a warning signal when working on roads or intersections with low visibility.

– Press the horn button (1) on the steering wheel to sound the horn.

# Checking the brake system for correct function

**⚠ DANGER**

**Risk of accident in the event of failure of the brake system!**

If the brake system fails, the truck will be insufficiently braked.

– Do **not** operate the truck if the brake system is faulty.

## Checking the electric brake

▷

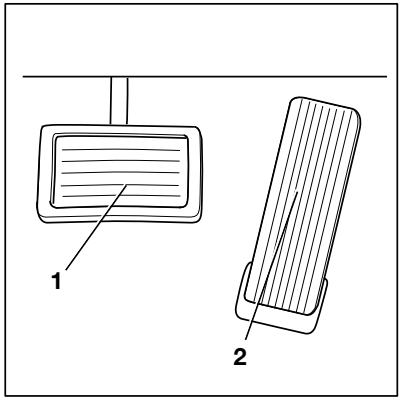


**⚠ DANGER**

**Risk of accident if the braking effect of the electric brake is inadequate!**

The braking effect of the electric brake may be insufficient for emergency braking.

– Always actuate the brake pedal (1) for emergency braking.

**⚠ DANGER**

**Risk of accident due to excessive speed!**

Depending on the charge state of the battery, regenerative braking may be insufficient when driving downhill, meaning that the maximum permissible speed of the truck is exceeded.

– Press the brake pedal (1).

If the driving speed is restricted or if the opposite drive direction is selected, the truck is braked using the electric brake.

– To actuate this, release the accelerator pedal (2).

The truck must decelerate and remain stationary.

– If the truck does not slow down, press the brake pedal (1).

## Checking the service brake

– Release the parking brake.

– Press the brake pedal (1).

There must be a slight pedal clearance and then a noticeable brake pressure point.

– Accelerate the unladen truck in a clear area.

– Press the brake pedal (1) firmly.

The truck must decelerate noticeably.

## Checking the parking brake on a gradient or a lorry ramp

**⚠ DANGER**

**Risk to life if the truck rolls away!**

If the parking brake is not applied, the truck could run people over.

– Do not leave the truck until the parking brake has been applied.

– Stop the truck on a steep gradient (e.g. a HGV ramp) and actuate the parking brake.

The parking brake must hold the truck on the incline.

– If the truck rolls away despite the parking brake being applied, stop the truck using the service brake.

– In an emergency, secure the truck with wedges on the downhill-facing side to prevent it from rolling away.

– Have the parking brake checked and repaired by the authorised service centre.

## Checking the parking brake on a level surface

**⚠ WARNING**

Risk of accident from abrupt deceleration!

The truck will decelerate abruptly if the parking brake is applied.

– Fasten the seat belt.

– Use the available restraint systems.

– Find a sufficiently large and open area in which nobody will be endangered or obstructed.

– Accelerate the truck to walking speed.

– Press the emergency off switch.

NOTE

*When the emergency off switch is actuated, note the following:*

- *The electric brake is disabled. The truck no longer responds to the command issued by the accelerator pedal.*
- *The power steering is no longer available. Steering forces are increased due to the remaining emergency steering function.*

– Release the accelerator pedal.

– Apply the parking brake.

The electric parking brake slows the truck with a low level of deceleration.

– To increase the level of deceleration, either press and hold the actuating button for longer or press it several times.

The truck must decelerate and remain stationary.

NOTE

*To release the parking brake, unlock the emergency off switch.*

– If the truck only coasts and does not decelerate or decelerates only slightly, stop the truck using the service brake.

– Secure the truck with chocks so that the truck does not roll away.

– Have the parking brake checked and repaired by the authorised service centre.

# Checking the steering system for correct function ▷

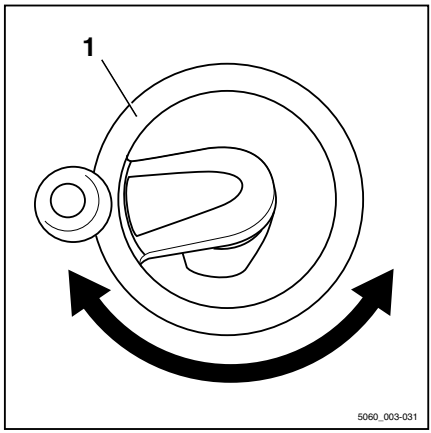


**⚠ DANGER**

**If the hydraulics fail, there is a risk of accident as the steering characteristics have changed.**

– Do not operate the truck if it has a defective steering system.

– Operate steering wheel (1). The steering play while stationary must not be more than two finger widths.

**NOTE**

*If the truck is switched on with the steering wheel turned, the maximum driving speed is limited. Travel speed limitation is removed as soon as the steering wheel is moved out of a cornering position into the straight-ahead position. This requires a change in steering angle of about half a revolution.*

# Adjusting the steering column

**⚠ DANGER**

**Safe driving is not guaranteed with the clamping screw open.**

Only adjust the steering column when the truck is stationary.

### Adjusting the angle

- Loosen the clamping screw (1) anti-clockwise.
- Move the steering column into the required position.
- Tighten the clamping screw (1) clockwise.

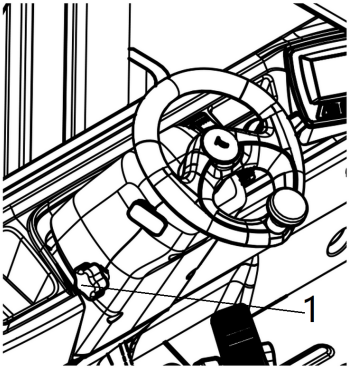

E129304005

## Emergency off switch

**DANGER**

**This switch button is the primary power switch. Do not disconnect this switch when performing an emergency stop.**

### Pressing the emergency off switch

- Press the emergency off switch (1) and release. This will completely shut down the truck's electrical system.

e129304006

**CAUTION**

In order to completely cut power to the truck (e.g. for maintenance work), the battery male connector must be removed.

## Pulling up the emergency off switch

– Pull up the emergency off switch (1). This will cause the truck's electrical system to start conducting. The truck is ready for use. ▷

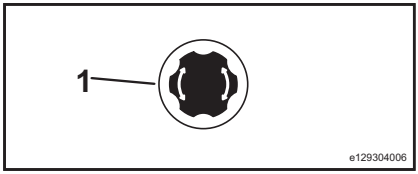


NOTE

*The truck is only operational after correctly pulling up the emergency off switch.*

## In the following situations, press the emergency off switch before operating:

First, disconnect the key switch, then press the emergency off switch.

- When preparing to recharge
- Before lifting the battery cover
- Before routine maintenance checks

NOTE

*When starting the forklift truck, first pull up the emergency off switch, if necessary, and then turn the key switch.*

**⚠ DANGER**

**Non-standard operation of the emergency off switch can easily cause accidents and damage to the power module.**

# Turn on and off lithium battery

## Turn on the lithium battery ▷

– Open the lithium battery cover as described in chapter"Opening and closing the lithium battery".

– Press the power switch button (1) of the lithium battery, and the button will light up with a blue backlight.

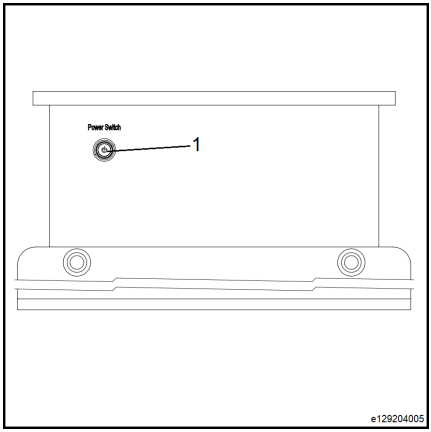


## Turn off the lithium battery ▷

– Open the lithium battery cover as described in chapter"Opening and closing the lithium battery".

– Press the power switch button (1) of the lithium battery, and the blue backlight of the button is extinguished.

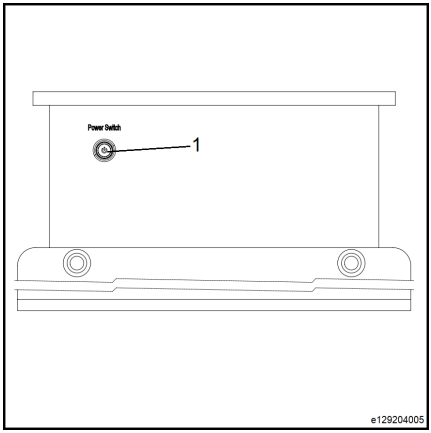


NOTE

*If the truck is not used for a long time, please turn off the lithium battery to prevent the self-discharge of the lithium battery from causing too low power.*

# Switching the truck on and off

## Starting the truck

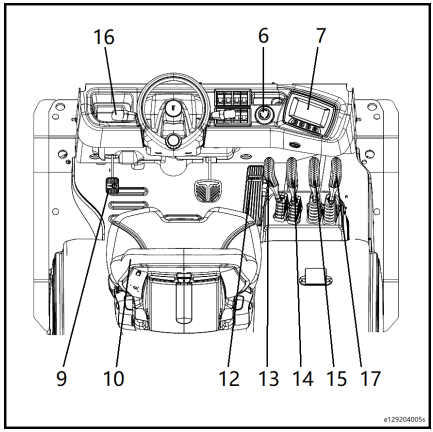


– If the truck is a lithium battery model, it is necessary to turn on the lithium battery switch first, for specific steps, see the "**Turn on and off the Lithium battery**"chapter.

– Sit on the driver's seat (10).

– Fasten the seat belt.

**NOTE**

- *The single-pedal reversing control lever (16) must be in the neutral position. The joysticks (13), (14) and (15) must be in the neutral position.*
- *Joysticks (13), (14) and (15) must be in the neutral position.*

– Pull up the emergency off switch (6) if necessary.

**NOTE**

*The forklift truck can only work when the emergency off switch is pulled up.*

– Make sure that the parking brake pedal (9) is actuated.

**NOTE**

*The truck can be started regardless of whether or not the parking brake pedal is actuated. For safety reasons, it is recommended to actuate the parking brake pedal before starting the truck.*

– Insert the key in the key switch and turn clockwise from position zero to position "I".

The electrical system is switched on.

– Depress the parking brake pedal (9). The pedal will rebound and the parking brake will disengage.

– Observe the display unit (7).

NOTE

*Ensure that the parking brake is fully disengaged. The truck cannot be driven until the parking symbol Ⓟ on the display unit has gone out.*

The truck is now ready for use.

NOTE

*Once the key switch has been switched on, a self-test of the display unit (7) is performed. The indicator lights at the bottom of the display light up for approx. 4 seconds before going out. The joysticks and/or accelerator pedals must not be used until all indicator lights have gone out. Otherwise, the truck will not function. To restart: switch the key switch off and on again.*

## Switching off the truck

▷

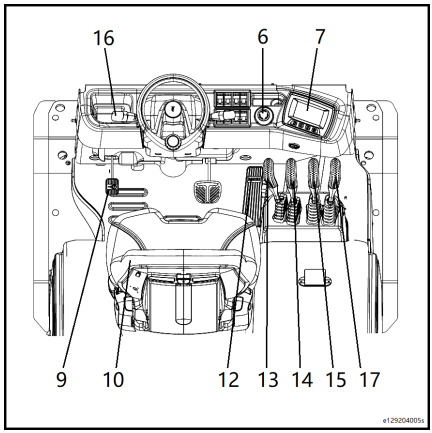


- Lift foot off the accelerator pedal (12).
- The single-pedal reversing control lever (16) must be in the neutral position. Joysticks (13), (14) and (15) must be in the neutral position.

▷

- Depress the parking brake pedal (9) to actuate the parking brake. Observe whether the parking symbol Ⓟ remains lit on the display unit (7).
- Turn the switch key anticlockwise to the zero position.
- Remove the key when leaving the vehicle.
- Push down the emergency off switch (6) if necessary.

* = Optional

# Setting the display unit

## Setting the main interface

– Long press the Enter/Modify button on the display unit to access the settings page.

– The settings page contains the following four setting items:

- Display settings
- Error codes
- Supervisor login
- Service login

Press the up/down buttons on the display unit to select "Settings" on the toolbar.

Through the "Settings" interface, users and technicians can configure more settings.

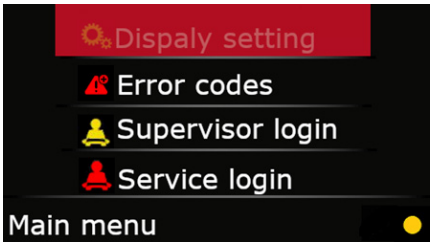


## Display settings

Press the Enter button to open the "Settings" menu, press the up/down buttons to select "Display settings", then press OK to enter the next level submenu.

– Access the "Language" settings menu to change the language. (e.g. English, Chinese, Spanish etc.)

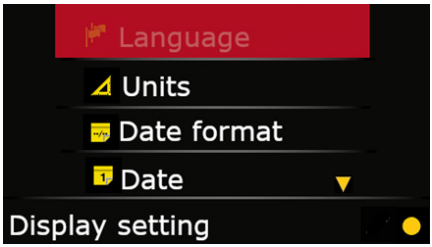


– Access the "Units" settings menu to change the measurement system. (Metric/Imperial)

## Setting the display unit

– Access the "Date format" settings menu to change the date format. (month.day.year 24-hour, day.month.year 24-hour, month/day/year 12-hour) ▷

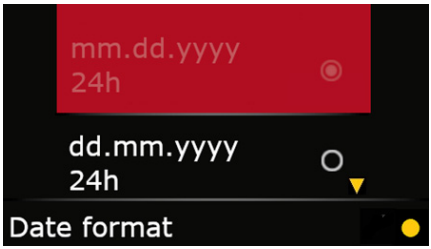


– Access the "Date" settings menu to change the date. ▷

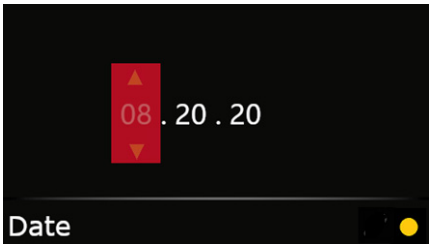


– Access the "Time" settings menu to change the time. ▷

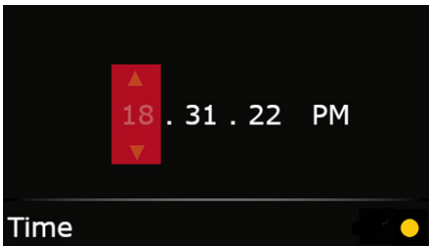


– Access the "Backlight" settings menu to adjust the display brightness. ▷

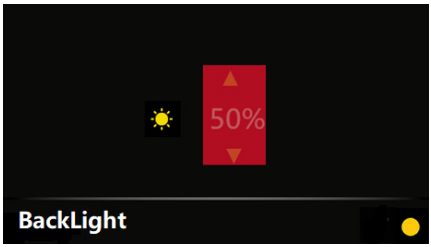

– Access the "system information" to read the system information of the display unit, such as the vehicle model and the software version of the display unit.

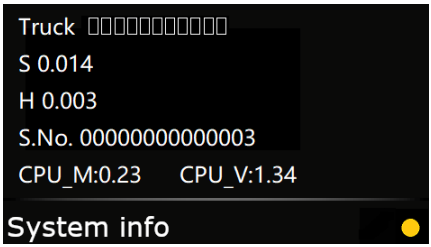


NOTE

*The "Display settings" are settings for use by customers, whereas the other settings are for use by technicians.*

## Performance mode

The truck have three performance mode.

You can confirm which performance mode the truck is in by looking at the symbol in the upper right corner of the display.

- PER: Performance
- EFF: Efficiency
- ECO: Economy

– The difference between the three modes:

- Power performance: **Performance** > **Efficiency** > **Economy**
- Power consumption: **Performance** > **Efficiency** > **Economy**

If you want to change the performance mode of the truck, please contact your authorized service partner.

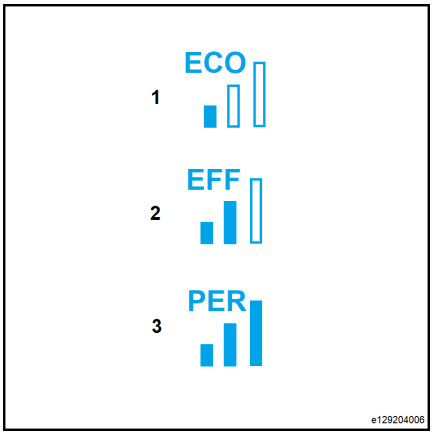

# Driving

## Driving

**⚠ CAUTION**

For reasons of stability and minimum braking distance, do not use the forklift truck on a long slope with a gradient of more than 15%. If you need to use the forklift truck on slopes with higher gradients, please first consult your authorised service partners. The gradeabilities given in the type sheet are calculated based on the truck's pulling force and are only applicable to situations in which the truck must surmount small obstacles or when driving on fairly even road surfaces.

The operating mode should suit road surface conditions (undulating, uneven, etc.), especially in dangerous working areas and when transporting loads.

**⚠ CAUTION**

Please note that the rear-view mirror must be used only to monitor rear traffic conditions.

Reversing is only permitted using direct rear view.

**NOTE**

*Certain forklift trucks (e.g. those with a special container roof or a rotary seat) have a reduced clearance between the seat and overhead guard. For this reason, trucks should only be used by persons whose normal operating posture is such that there is a minimum of 30 mm clearance between their head and the overhead guard.*

**NOTE**

*The truck can only be driven with the driver's seat under load.*

**NOTE**

*Before starting the truck, joysticks (13), (14), (15)and (17) must be in the neutral position. The reversing lever (16) must be in the neutral position.*

– Sit down on the driver's seat (10) (Only then is the seat switch under the driver's seat activated).

– Fasten the seat belt.

– Pull up the emergency off switch (6) if necessary.

– Make sure that the parking brake pedal (9) is actuated.

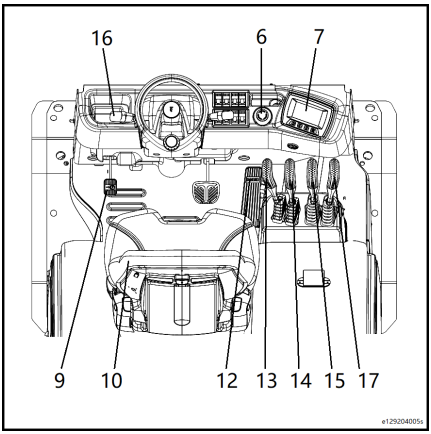


**NOTE**

*The truck can be started regardless of whether or not the parking brake pedal is actuated. For safety reasons, it is recommended to engage the parking brake pedal first.*

– Insert the key in the key switch and turn clockwise from position zero to position "I".

Observe the display screen (7).

All indicator lights at the bottom of the display light up. (The indicator lights go out after approx. 4 seconds)

– Lift the forks slightly and tilt the lift mast backwards.

– Depress the parking brake pedal (9). The pedal will rebound and the parking brake will disengage.

# Forward travel

## Forward travel

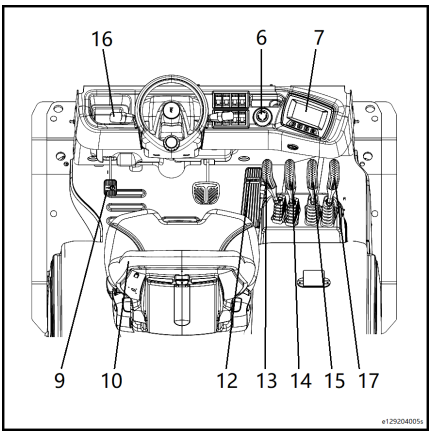


– Set the reversing handle (16) to the forward position.

– Smoothly depress the right-hand accelerator pedal (12).

The display unit shows the symbol of the preceding line.

Driving speed accelerates in relation to the increase in pedal travel.

**NOTE**

*Rapidly depressing the pedal will not change the acceleration, as the maximum acceleration is controlled automatically.*

## Reverse travel

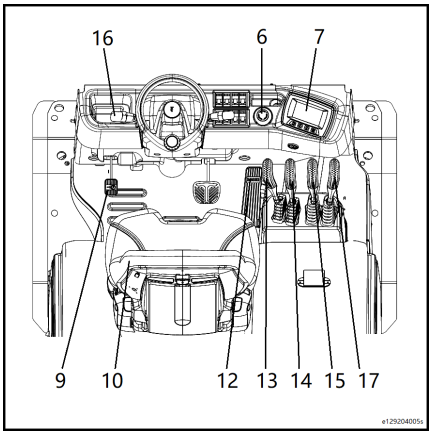


- Set the reversing handle (16) to the reverse position.
- Smoothly depress the right-hand accelerator pedal (12).

The display unit displays the reversing symbol.

Driving speed accelerates in relation to the increase in pedal travel.

**NOTE**

*Rapidly depressing the pedal will not change the acceleration, as the maximum acceleration is controlled automatically.*

## Changing the drive direction

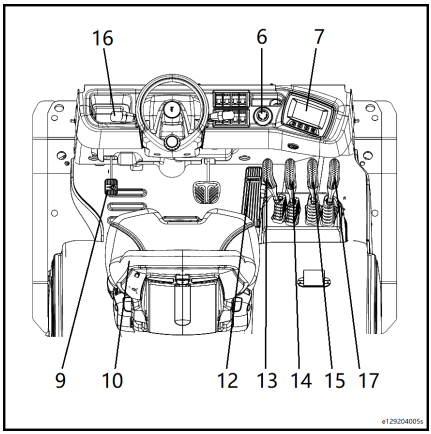


- Release the accelerator pedal (12).
- Pull the reversing handle (16) in the opposite direction.
- Depress the accelerator pedal (12) again to reverse acceleration.

The reversing handle can switch directly from forward to reverse without the accelerator pedal being released. The truck will slow to a halt using electrical braking and then accelerate in the selected direction.

**NOTE**

*Rapidly depressing the pedal will not change the acceleration, as the maximum acceleration is controlled automatically.*

# Brake system

## Brake system information

**⚠ WARNING**

Risk of accident or casualties if brake system is faulty.

Your truck should not be used under any circumstances if the brake system is faulty. Should you notice any defects in or wear to the brake system, please contact your authorised service partners immediately.

**⚠ WARNING**

The braking characteristics of the truck are influenced by the viscosity of the oil, among other things. Using a different oil (with a different viscosity) to that prescribed by the manufacturer will affect braking characteristics and increase the risk of accidents and risk to life.

Therefore, only use the oil specified by the manufacturer (see Recommendations for consumables).

Please contact your authorised service partners.

## Foot brake/emergency brake

– For emergency braking, depress the brake pedal (2) on the left side of the accelerator pedal. This will bring the forklift truck to a complete stop. ▷

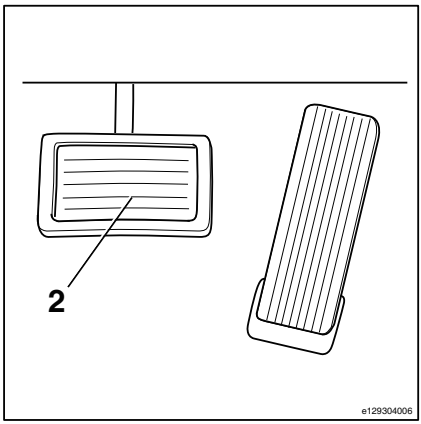


**NOTE**

*We recommend that drivers familiarise themselves with the efficacy of the brake system when the forklift truck is not carrying a load. Operate the forklift truck slowly on an uncrowded road surface to test travelling functions.*

If the foot brake fails, use the parking pedal to perform emergency braking and bring the vehicle to a standstill.

**⚠ CAUTION**

After performing an emergency stop using the parking brake, the parking braking system should be inspected for wear.

## Electronic regenerative braking ▷

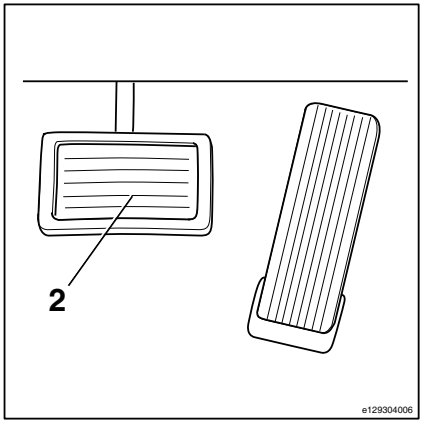


– Release the accelerator pedal (1) so that the pedal returns to the neutral position. Energy is recovered and a braking effect is produced.

This truck is equipped with the automatic brake control system. Slowly or quickly releasing the accelerator pedals to the neutral position allows the braking effect to be sensitively controlled, from gentle to hard braking.

**NOTE**

*If required, this function can be adjusted via a diagnostic program so that the effect is greater or less. Contact your local authorised service partners.*

**NOTE**

*Regenerative braking increases the braking performance. For emergency braking, depress the foot brake pedal (1), which is located next to the accelerator pedal.*

**DANGER**

**Danger of accidents**

The foot brake pedal (1) is generally used to perform an emergency stop.

**CAUTION**

Risk of accident

Depending on the battery charge state, the effect of electric regenerative braking may be diminished. In this case, to avoid excessive braking distance, the foot brake pedal should be used for braking, and the vehicle speed should be reasonably controlled according to the usage scenario.

For technical reasons, regenerative braking will not work if the battery is fully charged. In this situation, use the foot brake pedal to achieve braking.

# Parking brake

**⚠ WARNING**

If there is a fault with the braking system or system parts are worn, contact your authorised authorized service partners.

The forklift truck must not be operated if there are problems with the braking system.

## Applying the parking brake

**NOTE**

*The truck can be started regardless of whether or not the parking brake is applied. For safety reasons, it is recommended to start the truck with the parking brake applied.*

– Depress the parking brake pedal (1) until it reaches the locked position. ▷

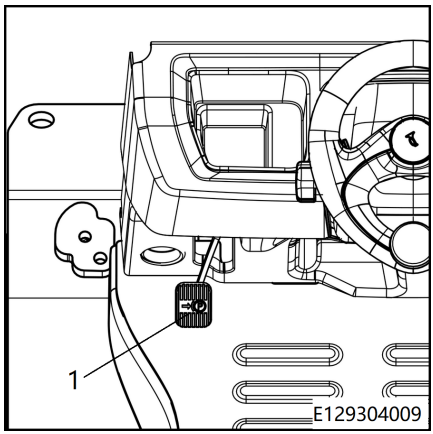


– The parking symbol Ⓟ on the display unit comes on and remains lit. The truck is braked. ▷

## Releasing the parking brake

– Depress the parking brake pedal and then release. The parking brake will return to its original position.

– The parking symbol Ⓟ on the display unit goes out. The truck is ready for operation.

NOTE

*Ensure the parking brake is fully disengaged. The truck cannot be driven until the parking symbol Ⓟ on the display unit has gone out.*

# Checking battery level

## General

The battery's discharge status is shown by an LED bar display on the display unit.

The green LEDs go out one after another as the battery discharges (each bar represents 10% of the battery capacity).

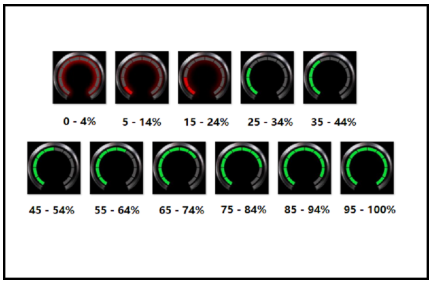


**CAUTION**

Repeated deep discharging of the battery can cause irreparable damage.

When the red LED flashes, the battery must be charged immediately.

- Pull up the emergency off switch if necessary.
- Insert the switch key into the switch lock and turn clockwise to the start position.
- Check the battery charge status on the discharge indicator (marked by the red arrow) on the display unit.

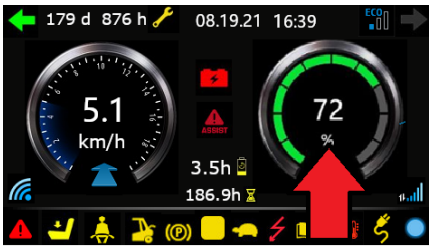

# Battery cover — Open - Closed

NOTE

*This vehicle has been designed to avoid interference with the upper rear section of the overhead guard when the battery cover is opened in the following situations:*

- *The steering column is at the limit position, close to the driver's cab.*
- *The driver's seat is adjusted forward to the limit position.*

CAUTION

In some special cases, the battery cover may interfere with the upper rear section of the overhead guard. Please adjust the seat or steering column to prevent this.

**The battery cover must be opened during the following procedures:**

- Servicing the battery

## Opening the battery cover

NOTE

*Before doing this, be sure to remove any loose items from the battery cover or from under the driver's seat.*

NOTE

*If necessary, adjust the steering column and driver's seat when opening the battery cover.*

– Pull the latch handle on the battery cover to the left to open the latch. The battery cover will automatically open. ▷

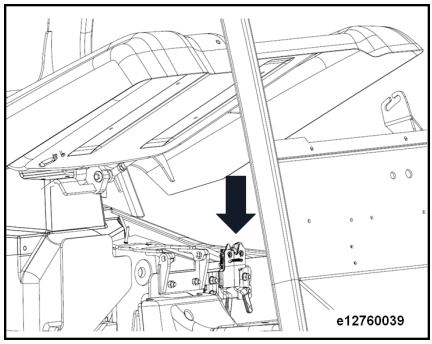


**⚠ CAUTION**

Do not lean too close to the battery cover, as it will spring open to a certain height.

– Push up the battery cover until it engages in the limit position.

**NOTE**

*When replacing the battery, make sure that the battery cover is fully opened.*

**NOTE**

*If a fully enclosed driver's compartment (*optional) is installed, the battery cover must be opened for battery replacement and similar operations, and the rear window of the driver's compartment must first be opened. This is to avoid the seat striking the rear window.*

**⚠ CAUTION**

After opening the battery cover, make sure that the gas spring is free from faults to prevent the battery cover from accidentally closing and causing personal injury in the event that the gas spring fails.

## Closing the battery cover

**⚠ CAUTION**

Do not sit on the battery cover: risk of injury or damage.

To avoid injury, ensure that personnel are far enough away before closing the battery cover.

– Lock the latch by pressing the battery cover down until the latch makes a locking sound.

# Battery hood gas spring

**⚠ CAUTION**

The battery hood gas spring comes with locking function. The battery hood will automatically lock after opening, to prevent the battery hood from closing suddenly and causing accident or injury.

– For vehicles with this function, when you need to close the battery hood, press the orange plastic unlock button on the gas spring of the battery hood.

– The battery cover can then be closed.

▷

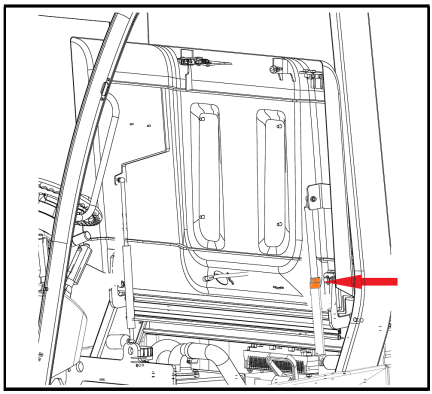

# Safety regulations for handling the lithium-ion battery

## First-aid measures

**⚠ WARNING**

Risk of injury!

Escaping gases can lead to breathing difficulties.

### Course of action required if gases or liquids escape

– Immediately ventilate the area or go out into the fresh air; in more serious cases, call a doctor immediately.

Skin irritation can occur in the event of contact with the skin.

– Thoroughly wash the skin with soap and water.

Eye irritation can occur in the event of contact with the eyes.

– Immediately rinse eyes thoroughly with water for 15 minutes, then consult a doctor.

## Maintenance personnel

The lithium-ion battery is virtually maintenance-free and can be charged by the driver.

– If you have any questions, please contact your authorised service centre.

– The handling instruction for the battery and the operating instructions for the battery charger must be followed.

– Observe the following safety regulations when maintaining, charging the battery.

**⚠ WARNING**

Risk of crushing/shearing!

The battery is very heavy. There is a risk of serious injury if any parts of the body are caught under the battery.

If parts of the body are wedged between the battery door and the edge of the chassis when the battery door is closed, this could lead to injuries.

– Only close the battery door if there is no part of the body between the battery door and the edge of the chassis.

– When charging and maintaining the battery, observe the manufacturer's maintenance instructions for the battery and battery charger.

## Fire protection measures

**⚠ DANGER**

**There is a risk of damage, short circuiting and explosion!**

– Do not place any metal objects or tools on the battery.

– Keep away from naked flames and do not smoke.

**⚠ DANGER**

**Increased risk of fire!**

Damaged lithium-ion batteries pose an increased fire hazard.

In the event of a fire, large quantities of water are the best option to cool the battery.

- Evacuate the location of the fire as quickly as possible.
- Ventilate the location of the fire well, as the resulting combustion gases are corrosive if inhaled.
- Inform the fire brigade that lithium-ion batteries are affected by the fire.
- Observe the information provided by the battery manufacturer regarding the procedure in the event of a fire.

## Battery weight and dimensions

- Do not remove or change the position of ballast weights.
- Observe the battery weight.

## General safety regulations for lithium-ion batteries

The following safety regulations generally apply to operating lithium-ion batteries.

- Comply with the specifications stated in the safety data sheets of the battery manufacturer.
- Protect the battery against mechanical damage to prevent internal short circuits.
- If batteries have even the slightest external damage, dispose of them in accordance with national regulations for the country in which they are being used.
- Do not expose batteries directly to continuously high temperatures or heat sources, such as direct sunlight.
- Train employees in how to handle lithium-ion batteries correctly.

# Connecting the rechargeable battery to an external charger

**⚠ CAUTION**

The charging current for the battery must not exceed 250 A. If you are using a charger with a high charging current, please contact your authorized service partners.

Certain requirements must be strictly followed when charging the battery using an external charger:

- Only use the battery charger and charging characteristic curve permitted in the battery specifications.

– Lower the fork carriage fully.

The fork arms must touch the ground.

– Apply the parking brake by depressing the parking brake pedal (1).

– Turn the key switch off.

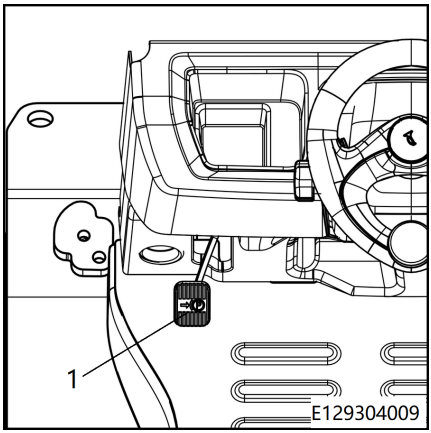


– Press the emergency off switch (1).

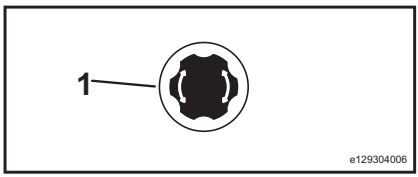

### lithium battery

– Open the battery charging port baffle. ▷

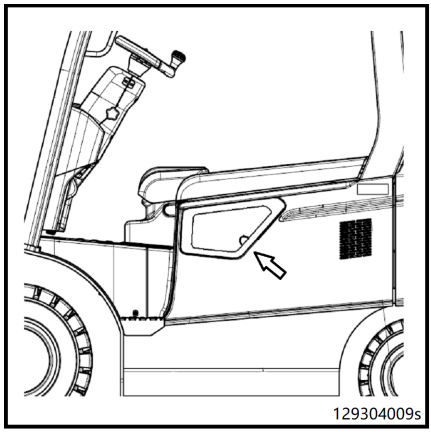


– Connect the external charger plug to the lithium battery connector (1). ▷
– Switch on charger.

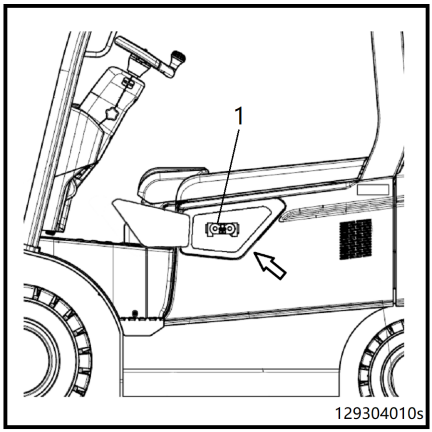


**⚠ CAUTION**

When inserting the battery plug, make sure that the plug is fully seated.

## Check rechargeable battery condition (lithium-ion battery).

**⚠ CAUTION**

Always use and maintain the lithium-ion battery in accordance with instructions from the manufacturer.

# Lifting devices and attachments

## Operating the lifting device

**⚠ WARNING**

There is a risk of being trapped between parts due to the movement of the lift mast or attachments.

Never stand near or enter the lift mast, or the area between the lift mast and the truck.

Use the lift mast and attachments in an appropriate and correct manner.

The driver must be trained in the use of the lift mast and attachments.

Be aware of the maximum lift height of the mast.

The control lever must be operated slowly and steadily.

Lifting, lowering and tilting speeds depend on the control lever's range of motion.The control lever will automatically return to neutral position once released.

**NOTE**

*For trucks fitted with optional ISO functionality, the lifting system and attachments only function when the truck is switched on and the driver's seat is occupied (seat switch is actuated).*

– Take note of the operating symbols marked with arrows. ▷

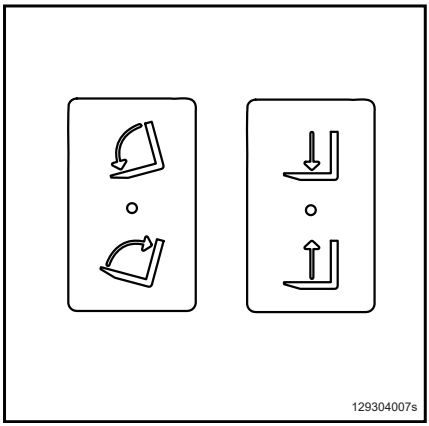

### Lifting the fork carriage

– Push lever (1) back.

### Lowering the fork carriage

– Push lever (1) forwards.

### Tilting the lift mast forward

– Push the lever (2) forwards.

### Tilting the lift mast backwards

– Pull lever (2) back.

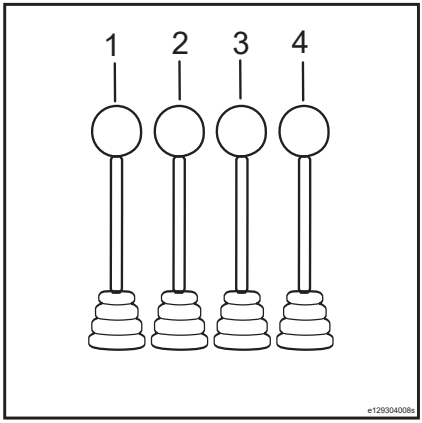


**⚠ DANGER**

**There is an increased risk of falling and tilting when the lift mast is lifted.For this reason, do not step onto the raised fork carriage.**

**⚠ CAUTION**

Do not stand on the fork arms during lifting.

Danger of falling or being hit.

## Operating attachments

Attachments are fitted to the truck as optional extras:(sideshift forks, rotators and tensioning devices etc.).Do not exceed the working pressure of the attachments during operation. Comply with operating instructions for the use of the attachments.One or two additional control levers can be fitted to operate the attachments.

**NOTE**

*Below is a description of attachment operations. The forklift truck can be configured with different joysticks.*

NOTE

*After installing each attachment, a label should be attached to the battery cover specifying the truck's load capacity after the installation. An attachment operating note should also be attached to the back of the attachment operating lever.*

– Take note of the operating symbols with arrows. ▷

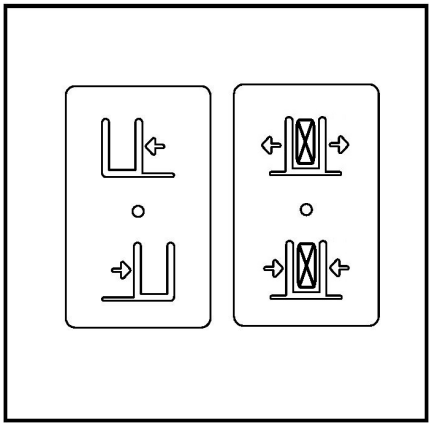

## Sideshift operation

– Push the control lever (3) forwards to move the fork carriage to the left. ▷
– Pull the control lever (3) back to move the fork carriage to the right.

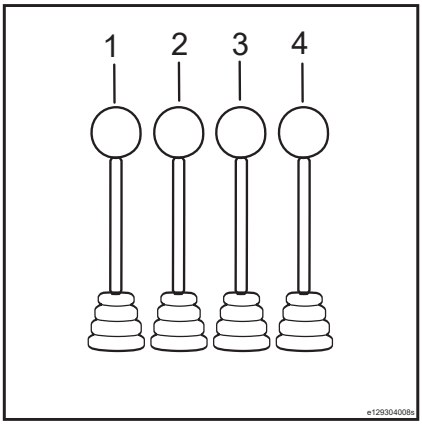


## Operating the clamp

– Push the control lever (4) forwards to release the clamp.
– Pull the control lever (4) back to engage the clamp.

**⚠ CAUTION**

If the attachment was not supplied with the truck, it can be used only if verified by your authorized service partners, and if safe operation, in terms of load capacity and stability after installation, is guaranteed.

# Transporting loads

## Load centre distance and load capacity

Before lifting goods, the relationship between the weight, load centre of gravity distance and maximum lift height of the goods must be understood.

– Load centre distance refers to the distance between the vertical plane of the fork arms and the centre of gravity of the loads (1).

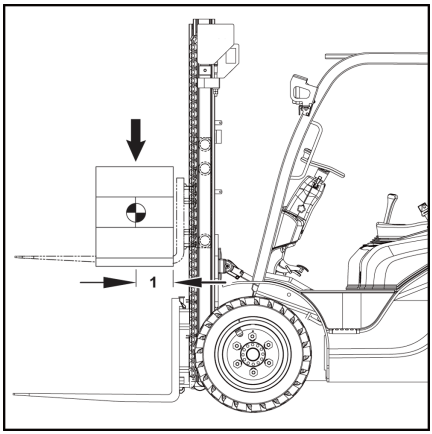


NOTE

*The centre of gravity is not necessarily located at the centre of the load.Load capacity refers to the weight of loads that can be safely lifted to a required height within the given load centre distance.*

## Capacity rating plate

### Before loading

Before lifting any load, please read the information on the truck's capacity rating plate.

**DANGER**

**Risk of loss of stability.**

The parameters on the capacity rating plate apply to compact, uniform loads. These load limits must not be exceeded. Exceeding the load limits will affect the stability of the forklift truck and the strength of the fork arms and lift mast.

If the truck is equipped with attachments, please read and follow the information on the additional capacity rating plate of each attachment (refer to the "Additional capacity rating plate" chapter for details).

## Transporting loads

The load capacity of a truck depends on:

- Type of the lift mast (standard, duplex, triplex)
- Lifting height of the installed lift mast
- Tyres of the front axle
- Whether attachments or additional equipment are used
- Maximum permissible backward tilting angle of the lift mast
- Size and load capacity of the fork arms
- Size of load, offset in gravitational or geometric centre

If one of these parameters is changed, this can have a considerable effect on the load capacity.

If the truck has been modified, the load capacity rating must be determined again, and it may be necessary to replace the capacity rating plate.

– Please contact your authorised service partners.

NOTE

*The truck's load capacity will also be restricted under the following circumstances:*

- *Transporting loads in level 6 or greater winds*

The maximum permissible load capacity is dependent on the load centre of gravity distance (the distance between the load's gravity centre and the vertical plane of the fork arms), the height of the gravity centre and the lift height.

NOTE

*The capacity rating plate below is only an example.*

## Capacity rating plate

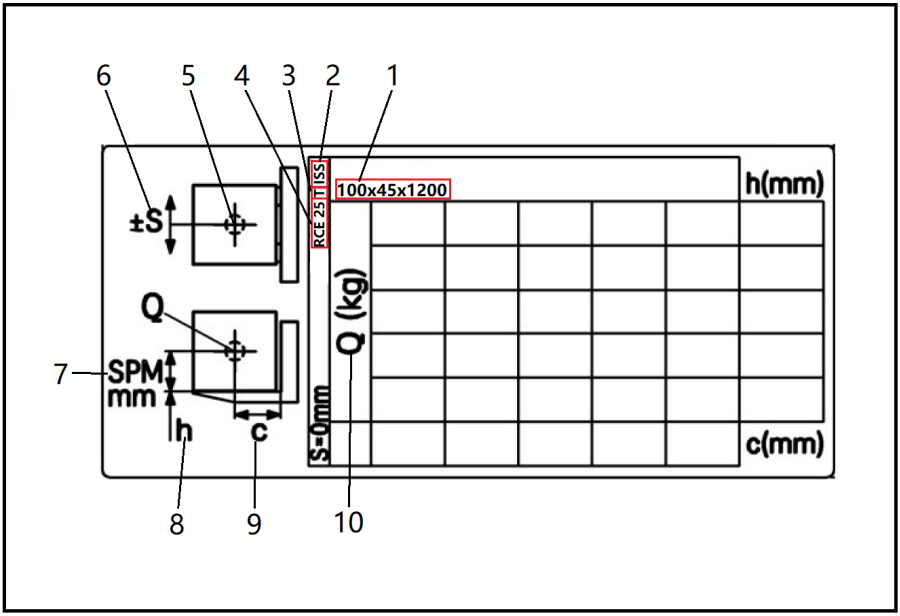


| | |
|---|---|
| 1 | Fork arms dimensions: Maximum width, maximum thickness and maximum length, in mm<br>Note: If larger fork arms are used, an additional capacity rating plate is required. Please contact your authorised service partners. |
| 2 | Identification of attachments: Integral sideshift (ISS), suspended sideshift (SS) |
| 3 | Lift mast types: Standard lift mast S, duplex lift mast D, triplex lift mast T |
| 4 | Truck model name |
| 5 | Symbol of load gravity centre |
| 6 | Maximum permissible side shift |
| 7 | Height from the load's gravity centre to the bottom edge of the load, in mm |
| 8 | Lift height (unit: mm) |
| 9 | Load centre of gravity distance refers to the distance between the vertical plane of the fork arms and the centre of gravity of the loads in millimetres. |
| 10 | Maximum load in kg |

### Load capacity example:

Load centre of gravity distance: 600 mm (9).

Load lift height: 4145 mm (10).

– Locate the intersection of the column of the 600 mm load centre of gravity distance and the row of the 4145 mm lift height.

In this example, the maximum permissible load capacity is 2000 kg (11).

Follow the same steps for other lift heights and load centre of gravity distances. The determined value is based on two fork arms and uniformly distributed central loads.

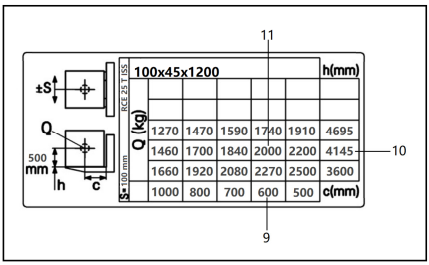


NOTE

*It is permitted to use a calculated (interpolated) value between two known adjacent values. It is not permitted to use H, Q and c values that are greater than the speficied value or c values that are smaller than the speficied value. If you need to use out-of-range values, please contact your authorised service partners.*

## Additional capacity rating plate

**DANGER**

**Risk of loss of stability.**

Using attachments will restrict the load capacity. Therefore, an additional capacity rating plate must be attached to a position that is visible to the driver.

If the plate is missing, or if any information about the truck, attachments and load capacity does not match the actual value, please contact your service partner.

Using attachments may affect the permitted maximum driving speed. When replacing attachments, be sure to always check the permitted maximum driving speed and make necessary adjustments. Alternatively, you can set the truck to permanently drive at the lowest allowable speed.

If preassembled fork carriage is used, then the relevant values on the additional capacity rating plate should be further reduced.

– Please contact an authorised service partners to determine the truck's new load capacity.

NOTE

*The additional capacity rating plate has different data for different truck series, lift mast series, and attachments. Please refer to the "Capacity rating plate" chapter on how to read the additional capacity rating plate.*

## Adjusting the fork spacing ▷

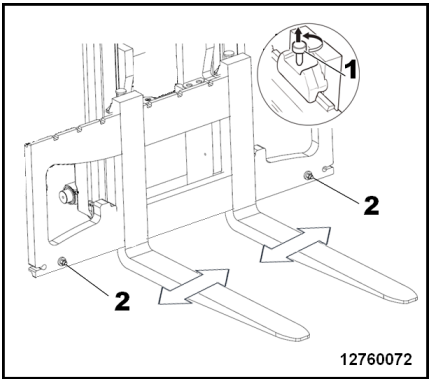


**DANGER**

**If the fork arms/locking bolts are not fully engaged, the fork arms may come off unexpectedly.**

**DANGER**

**There is a risk of death from falling fork arms.**

- If there are mounting screws (2), tighten the locking screw every time the fork arms (2) are replaced.
- Do not drive or transport loads without locking the screws (2).

- Lift the pallet locking bolts and turn them (1) 90° to unlock the bolts. The fork arm spacing can then be adjusted.
- Adjust the fork arm spacing based on the load dimensions.
- Note that the forks must be equidistant from the centreline of the fork carriage.
- After adjusting, return the fork arm lock bolts to their original positions and fit into the notches on the fork carriage, so that the fork arms are unable to move.

**CAUTION**

The fork arms are heavy! Exercise extreme caution when handling them.

When adjusting fork arm spacing, lean against the shelf. When you are standing securely, push the forks with your feet to adjust them. Do not adjust the forks using your hands.

NOTE

*The load must be centred between the forks.*

# Picking up a load

**⚠ DANGER**

**Fall and crush hazard**

Standing on the fork arms is strictly prohibited.

It is strictly prohibited to use the forks, pallets or other devices for lifting people (as required by Chinese regulations).

National regulations for the location of use must be observed. The truck can be equipped with an approved working platform for lifting people, if permitted by national regulations in the location of use. Please contact your local authorised service partner.

**⚠ DANGER**

**Danger due to falling load. Risk of fatal injury in the extension area of the lift mast.**

When transporting loads, there must be no one in the danger area.

When stacking and unstacking, people must not stand or walk under a raised load.

Always keep the load lowered and the mast tilted backwards when driving forklift trucks. Look out for people.

**⚠ DANGER**

**When a load is raised, it is not permitted for anyone to stand beneath the suspended load.**

**⚠ DANGER**

**Incorrectly positioned loads pose a risk of falling.**

Loads should be arranged so that they do not project beyond the truck loading area and cannot slip, topple over or fall off. If there is a risk of small-sized loads falling between the crossmembers of the overhead guard, use an appropriate load backrest or install a guard grille on the overhead guard.

Make sure that there is sufficient room for extension above the lift mast.

**⚠ DANGER**

**There is a risk of crushing as the lift mast or attachments may move.**

For this reason, never reach into or enter the lift mast, or the area between the lift mast and the forklift.

The lifting system and attachments should only be used for their intended purpose.

Drivers must be instructed in the operation of the lifting system and attachments.

Take note of the maximum lift height.

**⚠ DANGER**

**Overloading and tipping hazard**

Strictly adhere to the permissible load indicated on the load rating plate.

**⚠ DANGER**

**Risk of tipping!**

– Do not tilt the lift mast backwards with the load raised and when the lift height is high.

# Determining visibility conditions when driving with a load

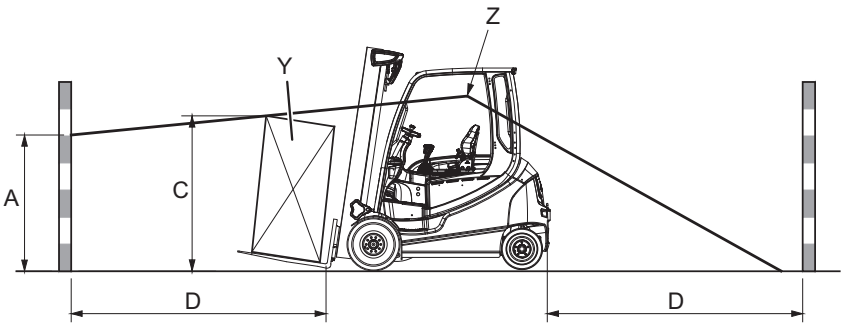


| | | | |
|---|---|---|---|
| A | Area that is not visible (max. 1085 mm) | Y | Load |
| C | Load height (in driving position) | Z | Driver's eye level |
| D | 4000 mm (distance to the front from the rear corner of the load when it is positioned on the fork carriage in the driving position) | | |

The driver's field of vision can be severely limited when driving with a larger load (Y) or with attachments fitted. In this case, safe operation is no longer guaranteed.

Visibility conditions can be evaluated by determining the size of the area that is not visible (A).

If the area that is not visible exceeds 1085 mm (EN16842-2/A3), the visibility conditions are inadequate.

Procedure:

– Sit down on the driver's seat and adopt the seat position.

– Determine the area that is not visible (A) using the load height (C) and the length of the route (D) = 4000 mm.

This area that is not visible (A) must not exceed 1085 mm.

– If the area that is not visible (A) exceeds 1085 mm, take one of the following measures:

- Drive backwards.
- Divide the loads so that the load height (C) is reduced and the area that is not visible (A) becomes smaller than 1085 mm.

## Transporting pallets

As a rule, loads (e.g. pallets) must be transported individually. Transporting multiple loads at the same time is only permitted:

- when instructed by the supervisor and
- when the technical requirements have been met.

The driver must ensure proper condition of the load. Only safely and carefully positioned loads may be transported.

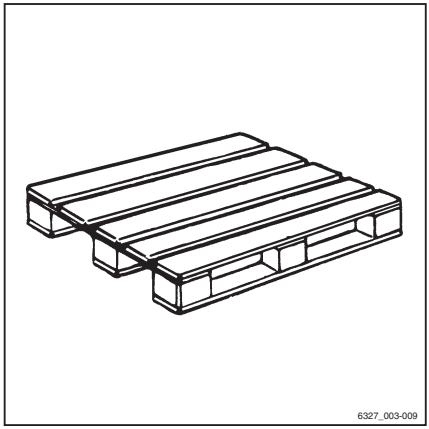


## Transporting suspended loads

Before transporting suspended loads, consult the national regulatory authorities (in Germany, the employer's liability insurance associations).

National regulations may place restrictions on these operations, e.g. in Italy. Contact the relevant authorities.

If there are no country-specific regulations for suspended loads in the country of use, the following instructions for safe handling must be observed.

**⚠ DANGER**

**Suspended loads that begin to swing can result in the following risks:**

- Impaired braking and steering movement
- Tipping over the load wheels or drive wheels
- Tipping the truck at right angles to the drive direction
- Risk of crushing of guide persons
- Reduced visibility

**⚠ DANGER**

**Loss of stability!**

Slipping or swinging suspended loads can lead to a loss of stability and cause the truck to tip over.

– When transporting suspended loads, observe the following instructions.

**Instructions for transporting suspended loads:**

- Swinging loads must be prevented by using the proper driving speed and driving style (careful steering, braking).
- Hanging loads must be hooked on to the truck in such a way that the harness cannot shift or release unintentionally and cannot be damaged.
- When transporting suspended loads, suitable aids (e.g. guy wires or supporting poles) must be available so that accompanying persons can guide suspended loads and prevent the loads from swinging.
- Take particular care to ensure that there is no one in the drive direction in the driving lane.
- If, despite this, the load begins to swing, ensure that no person is placed at risk.

**⚠ DANGER**

**Risk of accident!**

When transporting suspended loads, never perform or end driving and load movements abruptly.

Never drive on slopes with a suspended load.

Transporting containers holding fluids as hanging loads is not permitted.

## Picking up a load

**⚠ DANGER**

**There is a risk to life caused by a falling load or if parts of the truck are being lowered.**

– Never walk or stand underneath suspended loads or raised fork arms.

– Never exceed the maximum load values specified on the capacity rating plate. Otherwise, stability cannot be guaranteed.

– Only store pallets that do not exceed the specified maximum size. Damaged loading

equipment and incorrectly formed loads must not be stored.

– Attach or secure the load to the lifting accessory so that the load cannot move or fall.

– Store the load so that the specified aisle width is not reduced by protruding parts.

– Approach the rack carefully, brake gently and stop just in front of the rack.

▷

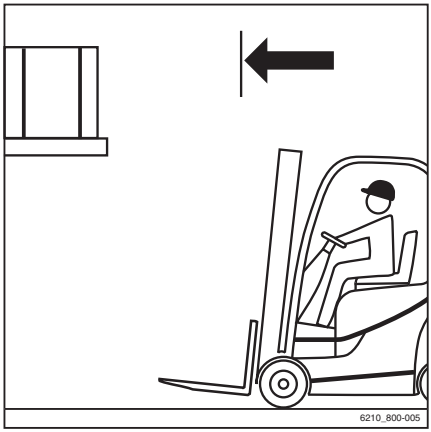


– Position the forks.

▷

**NOTE**

*The tilt speed of the lift mast in this truck is significantly higher than for previous products in this series. This is signalled by a warning message shown on the display and operating unit after the key switch has been switched on.*

– Set the lift mast to vertical.

– Lift the fork carriage to the stacking height.

**CAUTION**

Risk of component damage!

When inserting the fork into the rack, ensure that the rack and load are not damaged.

– Insert the fork as far under the load as possible. Stop the truck as soon as the fork back is resting on the load. The load centre of gravity must be midway between the fork arms. ▷

– Lift the fork carriage until the load is resting entirely on the fork. ▷

**⚠ DANGER**

**Risk of accident!**

– Beware of any people in the danger area.

**⚠ CAUTION**

Risk of component damage!

– Ensure that the roadway behind you is clear.

– Reverse carefully and slowly until the load is clear of the rack. Brake gently.

**⚠ DANGER**

**Due to the risk of tipping, never tilt the lift mast with a raised load!**

– Lower the load before tilting the lift mast.

– Lower the load while maintaining ground clearance. ▷

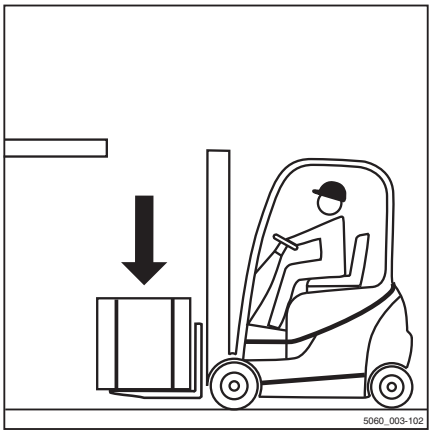


– Tilt the lift mast backwards. ▷

The load can be transported.

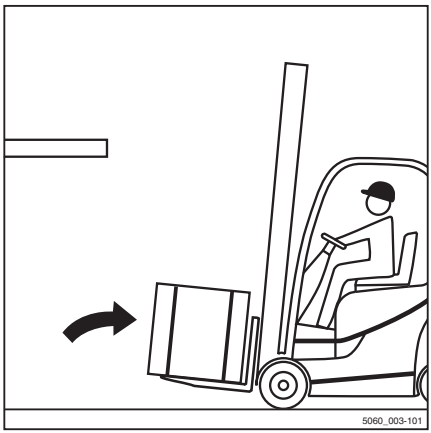

# Transporting loads

NOTE

*Observe the information in the chapter entitled "Safety regulations when driving".*

**DANGER**

**The higher a load is lifted, the less stable it becomes. The truck can tip over. The load can fall. There is an increased risk of accidents.**

Driving with a raised load and the lift mast tilted forward is not permitted.

- Only drive with the load lowered.
- Lower the load until ground clearance is reached (not over 300 mm).
- Only drive with the lift mast tilted backwards.

- Drive slowly and carefully around corners.

NOTE

*Observe the information in the chapter entitled "Steering".*

- Always accelerate and brake gently.

NOTE

*Observe the information in the chapter entitled "Operating the service brake".*

– Never drive with a load protruding to the side (e.g. with the sideshift)! ▷

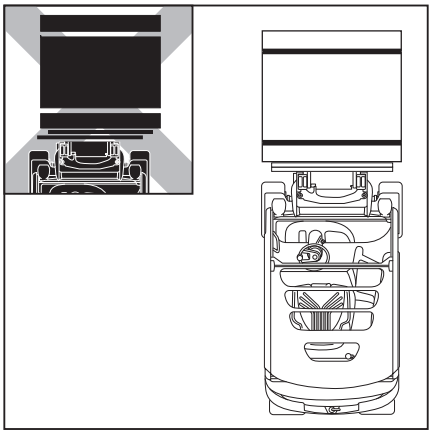

## Setting down loads

**⚠ DANGER**

**Risk of accident due to changed moment of tilt!**

Please note that the lift mast can be tilted far enough forward with a raised load to cause the truck to tip over.

The load centre of gravity and the moment of tilt both change when the load slips. The truck may tip forwards.

– Only tilt the lift mast forwards with a raised lifting accessory when it is directly above the stack.
– When the lift mast is tilted forwards, take particular care to ensure that the truck does not tip forwards and that the load does not slip.

**⚠ WARNING**

Risk of accident from falling load!

If the fork or the load remains suspended during lowering, the load may fall.

– When removing from stock, move the truck far enough back so that the load and the fork can be lowered freely.

- Drive up to the stack with the load lowered in accordance with regulations.
- Set the lift mast to vertical.
- Lift the load to the stacking height.
- Approach the rack at a moderate speed.

**NOTE**

*The tilt speed of the lift mast in this truck is significantly higher than for previous products in this series. This is signalled by a warning message shown on the display and operating unit after the key switch has been switched on.*

- Lower the load until it rests securely on the rack.
- Look behind you!
- Move the truck back until the fork arms can be lowered without touching the stack.
- Lower the fork to the ground clearance position.
- Tilt the lift mast backwards and drive away.

## Driving on ascending and descending gradients

**⚠ DANGER**

**Risk of fatal injury!**

Driving on ascending and descending gradients carries special dangers!

– Always follow the instructions below.

– On ascending and descending gradients, the load must be carried facing uphill.
– It is only permitted to drive on ascending and descending gradients that are marked as traffic routes and that can be used safely.
– Ensure that the ground to be traversed is clean and provides a good grip.
– Do not turn on ascending and descending gradients.
– Do not drive onto or along ascending and descending gradients at an angle.
– Do not park the truck on ascending or descending gradients.
– In case of emergency, secure the truck with wedges so that the truck does not roll away.
– Reduce the driving speed on descending gradients.
– Do not drive downhill faster than the truck can drive uphill on the same gradient.
– Determine the maximum permissible speed with a test drive uphill, if necessary.

It is not permitted to drive on long ascending and descending gradients greater than 15% due to the specified minimum braking and stability values.

– Before driving on ascending and descending gradients greater than 15%, consult the authorised service centre.

The process of placing loads into stock and removing loads from stock while on an ascending or descending gradient is not permitted!

– Always place loads into stock and remove loads from stock on a horizontal plane.

## Driving onto lifts

▷

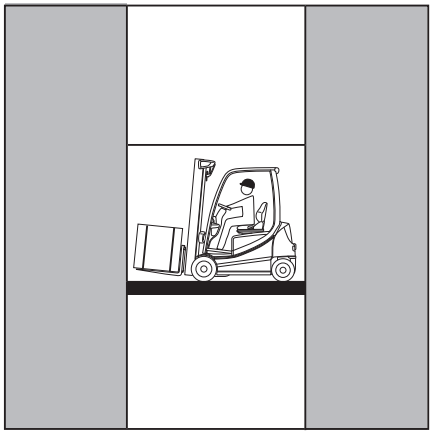

The driver may only use this truck on lifts with a sufficient load capacity and for which the operating company has been granted authorisation (refer to the section entitled "Definition of responsible persons").

**⚠ DANGER**

**There is a risk of fatal injury from being crushed or run over by the truck.**

– There must not be any persons already in the lift when the truck is driven into the lift.

– Persons are only permitted to enter the lift once the truck is secure, and must exit the lift before the truck is driven out.

## Determining the total actual weight

▷

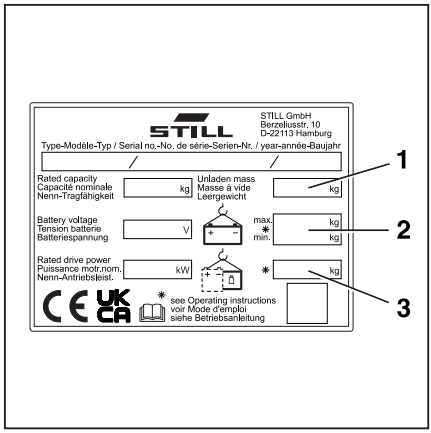


– Park the truck securely and switch it off.

– Determine the unit weights by reading the truck nameplate and, if necessary, the nameplate on the attachment (variant) and/or by weighing the load to be lifted.

– Add together the determined individual weights to obtain the total weight of the truck:

Net weight (1)
+ Max. permissible battery weight (2)
+ Ballast weight (variant) (3)
+ Net weight of attachment (variant)
+ Weight of the load to be lifted
+ 100 kg allowance for driver
= Total actual weight

– Drive the truck into the lift with the forks facing forwards. Make sure not to touch the shaft walls.

– Park the truck securely in the lift and switch it off to prevent uncontrolled movements of the load or the truck.

## Driving on loading bridges

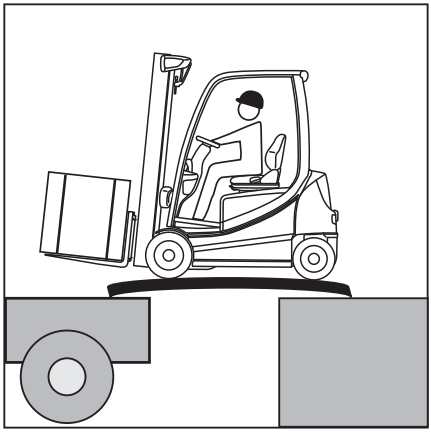

**⚠ DANGER**

**Risk of accident from the truck crashing!**

Steering movements can cause the rear of the truck to veer off the loading bridge towards the edge. This may cause the truck to crash.

For three-wheel trucks, the useable area of the loading bridge must be enclosed so that the rear drive wheel does not fall through.

The lorry driver and the forklift truck driver must agree on the departure time of the lorry.

– Establish the departure time of the lorry.
– Determine the total actual weight of the truck.
– Before driving over a loading bridge, observe the company directive for the loading bridge.
– Make sure that the loading bridge is properly attached and secured and has a sufficient load capacity (e.g. lorry, bridge).
– Ensure that the lorry onto which you will be driving is secured to prevent it from shifting and that it can support the load of the truck.

## Determining the total actual weight

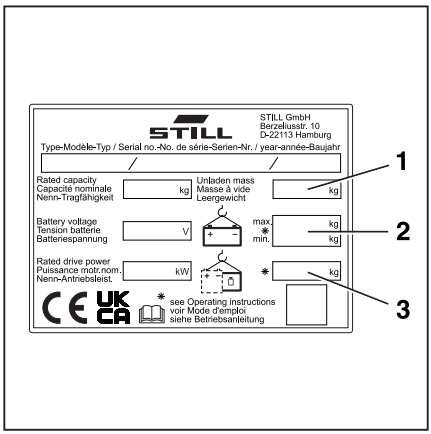


– Park the truck securely.
– Determine the unit weights by reading the truck nameplate and, if necessary, the nameplate on the attachment (variant) and/or by weighing the load to be lifted.
– Add together the determined individual weights to obtain the total weight of the truck:

Net weight (1)
\+ Max. permissible battery weight (2)
\+ Ballast weight (variant) (3)
\+ Net weight of attachment (variant)
\+ Weight of the load to be lifted
\+ 100 kg allowance for driver
= Total actual weight

– Drive slowly and carefully on the loading bridge.

## Tow coupling

If the truck breaks down, it can be towed using the tow coupling.

The tow coupling can only be used for hauling light loads in factory areas. (Pay attention to accident prevention and comply with technical safety regulations)

– Lift out the towing pin (1).

– Place the towing pin into the connector tube.

– Insert the towing pin into the lock aperture.

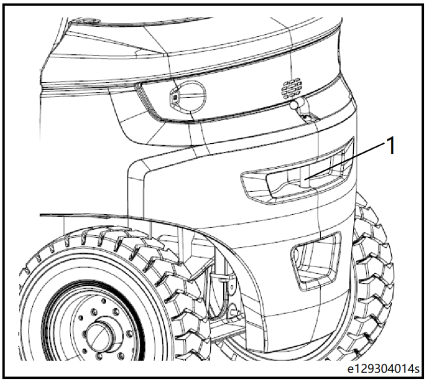


NOTE

*When towing, the driver must be sitting in the seat to steer the truck, actuate the brakes and operate other controls.*

NOTE

*For IC counterbalanced forklift trucks, if there is no fault with the engine, we recommend starting the engine before towing the truck. This way, the hydraulic steering system can be used, which will facilitate steering.*

## Leaving the truck temporarily

If you want to leave the truck temporarily to perform simple tasks in the vicinity of the truck (for example, order picking, opening the door or hitching a trailer) while keeping the ignition switched on, you must observe the following precautions:

– Lower the fork carriage.

– Tilt the lift mast forwards slightly.

**⚠ CAUTION**

If the truck moves, there is danger of accidents.

- Never park the truck on an uphill or downhill slope with a gradient greater than 8%. If necessary, the truck should also be secured on the side facing downhill.
- The parking brake should be applied on the truck.
- Check that the truck is stationary before leaving the truck.

**NOTE**

*Apply the parking brake on the truck as described in the section "**Parking Brake**."*

**⚠ WARNING**

Make sure that the truck will not move.

**NOTE**

*When leaving the truck temporarily, be sure to keep the truck under constant supervision.*

## Before exiting the truck

- Select a location that is secure and as clean as possible.
- Set down the load/lower the fork carriage completely.
- Tilt the mast forwards slightly.
- Lower the fork arms until they touch the ground.
- Apply the parking brake until it reaches the locked position.
- Switch off the truck by turning the key to the 0 position.
- Remove the key.

**⚠ DANGER**

Do not switch off the truck by turning the key when the truck is moving.

**⚠ DANGER**

The handbrake must be applied and the key removed before exiting the vehicle. Do not leave the truck on a ramp except in emergency situations. In such case, place chocks (3) under the front wheels to immobilise the vehicle.

▷

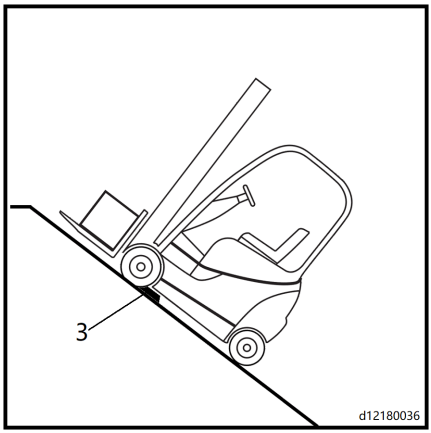

# Operation in special operating situations

## Transport

**⚠ CAUTION**

Danger of material damage from overloading!

If the truck is driven onto a means of transport, the load capacity of the means of transport, the ramps and loading bridges must be greater than the actual total weight of the truck. Components may become permanently deformed or damaged due to overloading.

– Determine the actual total weight of the truck.
– Only load the truck if the load capacity of the means of transport, the ramps and loading bridges is greater than the actual total weight of the truck.

### Determining the actual total weight

▷

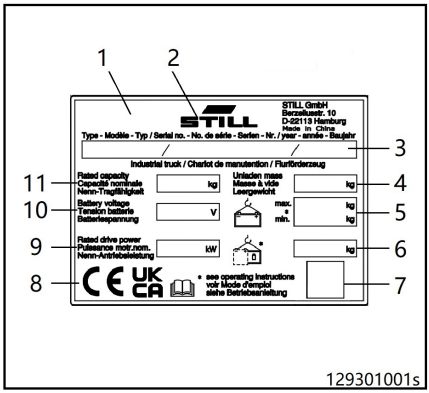


Tare weight (4)
+ Max. permissible battery weight (5)
+ Ballast weight (variant) (6)
+ Attachment net weight (variant)
+ 100 kg allowance for driver
= Actual total weight

**⚠ DANGER**

**Risk of accident from the truck crashing!**

Steering movements can cause the tail end to veer off the loading bridge towards the edge. This may cause the truck to crash.

- Before driving over a loading bridge, ensure that it is installed and secured properly.
- Ensure that the transport vehicle to be driven onto has been sufficiently secured against moving.
- Maintain a safety distance from edges, loading bridges, ramps, working platforms etc.
- Drive slowly and carefully onto the transport vehicle.

## Setting chocks

- Secure the truck from rolling away by placing a wheel chock in front of each front wheel and behind each back wheel (1).
- Park the truck securely.

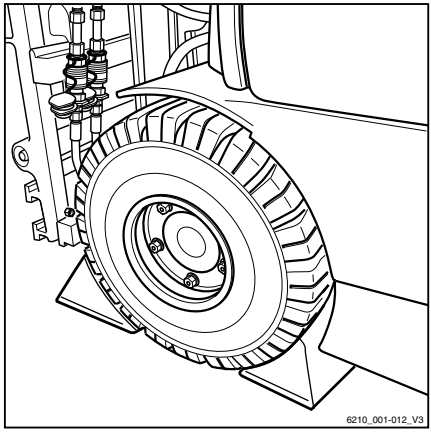


**⚠ CAUTION**

Risk of component damage!

If you remove the battery male connector when the key switch is switched on (under load), an arc will be produced. This can lead to erosion at the contacts, which considerably shortens their service life.

- Switch off the key switch before the battery male connector is disconnected.
- Only disconnect the battery male connector with the key switch switched on in an emergency.

- Ensure that the key switch is switched off.
- Disconnect the battery male connector.

**NOTE**

*If the electric parking brake (variant) cannot be triggered electrically, it must be applied manually; see the chapter entitled "Emergency operation of the electric parking brake".*

# Towing

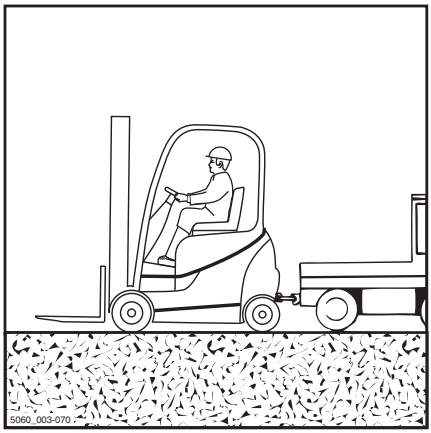


**DANGER**

**The brake system on the towing vehicle may fail. There is a risk of accident!**

If the brake system of the towing vehicle is not adequately sized, the vehicle may not brake safely or the brakes may fail. The towing vehicle must be able to absorb the pulling and braking forces from the unbraked towed load (total actual weight of the truck).

– Check the pulling and braking forces of the towing vehicle.

**DANGER**

**The truck could drive into the towing vehicle when the towing vehicle brakes. There is a risk of accident!**

If a rigid connection has not been used for power transmission in two directions during towing, the truck may drive into the towing vehicle when the towing vehicle brakes. For safety reasons, only a tested tow bar may be used.

– Use a tested tow bar.

**CAUTION**

If the drive of the truck between the drive motor and the drive axle is not interrupted, the drive may be damaged.

– Place the drive direction switch in the neutral position.

**CAUTION**

Risk of component damage!

If you remove the battery male connector with the key switch switched on (under load), an arc will be produced. This can lead to corrosion at the contacts, which considerably shortens their service life.

– Do not disconnect the battery male connector while the key switch is switched on.

**⚠ DANGER**

**People can be crushed between the truck and towing vehicle during manoeuvring. There is danger of death!**

The towing vehicle may only be manoeuvred and the tow bar may only be attached using a second person as a guide. This ensures that the driver of the towing vehicle and the mechanic attaching the tow bar are aware of possible risks.

– Only manoeuvre with a guide.

**⚠ CAUTION**

Steering is stiff! There is no power steering if the hydraulics fail!

– The selected towing speed must allow the truck and towing vehicle to be effectively braked and controlled at all times.

**⚠ CAUTION**

If the truck is not steered while it is being towed, it may veer out in an uncontrolled manner!

– The truck being towed must also be steered by a driver.
– The driver of the truck being towed must sit in the driver's seat and fasten the seat belt before towing.
– Where possible, activate the restraint systems provided.

– Set down load and lower fork arms close to the ground.
– Place the drive direction switch in the neutral position.
– Apply the parking brake.
– Switch off the key switch.
– Disconnect the battery male connector.
– Check the pulling and braking forces of the towing vehicle.
– With the help of a guide, attach the towing vehicle to the truck.
– Secure the tow bar to the tow coupling of the towing vehicle and the truck.
– Sit in the driver's seat in the truck to be towed, and fasten the safety belt.

- Where possible, activate the restraint systems provided.
- Release the parking brake.
- Select a towing speed that allows the truck and towing vehicle to be effectively braked and controlled at all times.
- Tow the truck.
- After towing, secure the truck from rolling away (e.g. by applying the parking brake or using chocks).
- Remove the tow bar.

## Crane loading

Crane loading is only intended for transporting the complete truck, including the lift mast, for its initial commissioning. For application conditions that require frequent loading or that are not presented here, please contact the manufacturer with regard to special variants.

Only those persons with sufficient experience of suitable harnesses and hoists may load up forklift trucks.

### Determining the actual total weight ▷

- Park the forklift truck securely; see .
- Determine the unit weights by reading the truck nameplate and, if necessary, the attachment (variant) nameplate.
- Add the determined unit weights to obtain the actual total weight of the truck:

  Tare weight (4)

  \+ Max. permissible battery weight (5)

  \+ Ballast weight (variant) (6)

  \+ Attachment net weight (variant)

  = Actual total weight

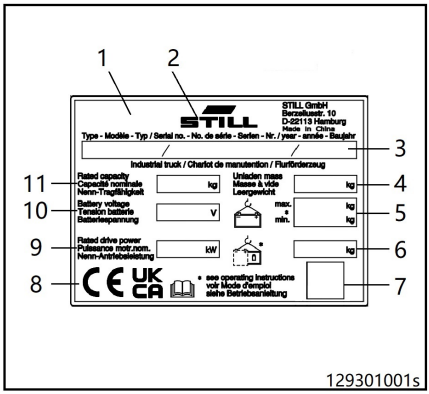

## Hooking on the lifting straps

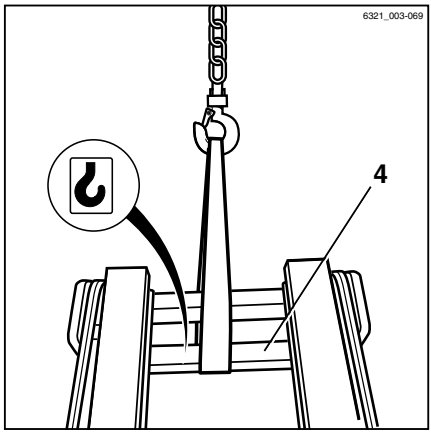


**⚠ CAUTION**

Harnesses may damage the truck's paintwork!

Harnesses may damage paintwork by chafing and pressing on the surface of the truck. Particularly hard or sharp-edged harnesses, such as wires or chains, can quickly damage the surface.

– Use textile harnesses, e.g. lifting straps, with edge protectors or similar protective devices if necessary.

**⚠ DANGER**

**There is risk of being hit if the hoists and harnesses fail and cause the truck to fall, with potentially fatal consequences!**

– Only use hoists and harness with sufficient load capacity for the actual total weight of the truck.
– Only use the truck's designated lifting points.
– Make sure that harnesses such as hooks, shackles, belts etc. are only used in the indicated load direction.
– The harnesses must not be damaged by truck parts.

– Loop the lifting straps around the main traverse (4) on the outer mast of the lift mast.

**NOTE**

*The lifting points of the truck are marked with the hook symbol.*

– In trucks with swing axles, loop the crane belts around counterweight (5), as shown.

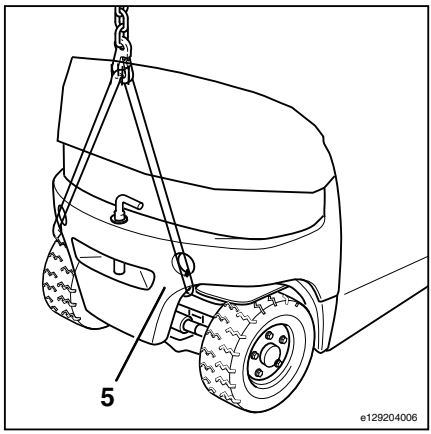

– Set the length of the harnesses so that the lifting eye (6) is vertically above the truck's centre of gravity.

This ensures that the forklift truck hangs level when lifting it.

– Connect the lifting straps to the lifting eye and insert the safety device (7).

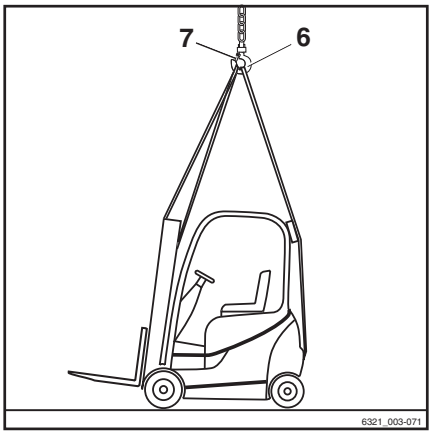


– In trucks with steering turntable axles, loop the crane belts around towing pin.

– Determine the truck's centre of gravity.

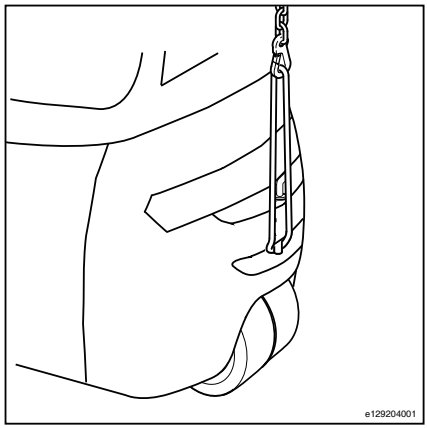

– Set the length of the harnesses so that the lifting eye (6) is vertically above the truck's centre of gravity.

This ensures that the forklift truck hangs level when lifting it.

– Connect the lifting straps to the lifting eye and insert the safety device (7).

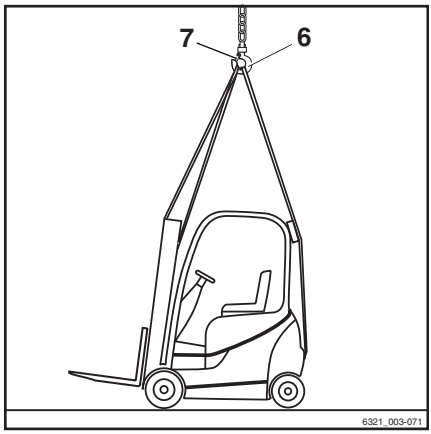


**⚠ CAUTION**

Incorrectly fitted harnesses may damage attachment parts!

Pressure from the harnesses can damage or destroy attachment parts when the truck is lifted. If attachment parts are in the way (e.g. lighting, rear window, trademark emblem etc.), these must be removed before loading. Ask your service centre about this.

– Secure harnesses in such a way that they do not touch any attachment parts.

## Loading the truck

**⚠ DANGER**

**If the raised truck swings in an uncontrolled fashion, it may crush people. There is a risk to life!**

– Never walk or stand underneath suspended loads.

– Do not allow the truck to bump into anything whilst it is being lifted, or allow it to move in an uncontrolled way.

– If necessary, hold the truck using guide ropes.

– Carefully lift the truck and take care when setting it down at the intended location.

# Storing the truck

## Taking the truck out of operation

If the truck will not be used for over two months, place it in a very well ventilated, frost-free, clean and dry room. Additionally, the steps below should be followed:

### Steps to be taken before putting the truck temporarily out of use

- Clean the truck thoroughly.
- Lift and lower the fork carriage to its full extent and tilt the lift mast forwards and backwards several times. Repeat the same operation several times on attachments, if fitted.
- Lower the fork carriage onto the support block to release the load on the chain.
- Check the hydraulic oil level and refill if necessary.
- Apply a thin coat of oil or grease to the surfaces of all exposed components.
- Lubricate the truck.
- Check the condition of the battery and the electrolyte level. Apply non-acidic grease to the terminal. (Should comply with manufacturer's instructions)
- Check the lithium-ion battery* (option) status. (Should comply with manufacturer's instructions)
- Spray all the electrical contacts with the appropriate contact spray.

**⚠ CAUTION**

Erect and fix the forklift truck to prevent permanent tyre deformation.

**NOTE**

*Do not cover the truck with plastic film as it may accumulate water vapour.*

**NOTE**

*If the forklift truck is not in use for over 6 months, contact your authorised service partners in order to take further measures.*

### Bringing the truck back into use

- Clean the truck thoroughly.
- Lubricate the truck.
- Apply non-acidic grease to the battery terminal.
- Check the battery condition and electrolyte level. (Should comply with manufacturer's instructions)
- Check the lithium-ion battery* (option) status. (Should comply with manufacturer's instructions)
- Check if the hydraulic oil contains any water and change the oil if necessary.
- Check the brake fluid level and replace or top up if necessary.
- Conduct all maintenance as required for first use.
- Using the truck.

General Knowledge

Proper functioning of the forklift truck can only be maintained by carrying out periodic maintenance and checks according to the operating guidance and tips set out in the user guide. Checking and maintenance work may only be performed by technicians accredited by the manufacturer. This work can be performed by your authorised service partners according to the Maintenance Contract.

If you wish to maintain and service the forklift truck yourself, we recommend that maintenance is carried out by the authorised service partners's appointed technicians for at least the first three times. Your maintenance personnel should also be present in order to receive appropriate training.

During the maintenance process, please make sure that the forklift truck is stationary on flat ground and that it does not slide.

Lower the fork carriage and slowly tilt the lift mast forward until the truck is stationary. Apply the parking brake. Press the power isolation switch and remove the key. When working on a truck with a raised carriage or lift mast, the carriage or lift mast must be secured to prevent it falling.

Ensure that the carriage and lift mast will not fall suddenly when raised.

When carrying out maintenance on the back of the truck, the lift mast must be secured to prevent backwards tilting.

Modifying or installing additional equipment on the forklift truck is prohibited without the agreement of the manufacturer.

**⚠ CAUTION**

Lost or damaged dataplates and warning labels must be replaced. **Refer to user manuals for position and part numbers.**

A functional test and trial run should be performed after every maintenance check.

**NOTE**

*If the forklift truck is used in an extreme environment (such as excessive heat, excessive cold or areas with high dust concentrations), the time intervals given in the maintenance tables should be reduced accordingly.*

**⚠ CAUTION**

Follow the manufacturer's safety regulations and disposal methods regarding oil, lubricating grease and cleaning fluids.

## Maintenance intervals

**NOTE**

*If the forklift truck is used in a designated environment, the time intervals in the maintenance table can be changed. The inspection and maintenance intervals depend on the operating and service conditions of the forklift truck.* ***We recommend shortening the maintenance intervals for forklift trucks operating in harsh environments. If you have any questions, please contact an authorised service partners.***

# Disposal of old trucks

The disposal of old trucks is regulated in directive 2000/53/EC from the European Parliament and Council.

We therefore recommend having this work carried out in an approved recycling plant. If you would like to carry out this work yourself, you must obtain approval from the relevant authorities as per articles 9, 10 and 11 of directive 75/442/EEC.

In addition, the following minimum requirements must be observed:

- The locations in which old trucks are stored before treatment must be areas suited to this task with impervious surfaces. These areas are also to be equipped with collection devices and separators for leaking fluids and degreasing cleaning materials
- The locations for treatment must be areas suited to this task with impervious surfaces. These areas must also be equipped with collection devices and separators for leaking fluids and degreasing cleaning materials. Suitable storage areas must be available for disassembled and partially oil-smeared parts, as well as for tyres including fire protection measures. Suitable storage tanks for fluids such as fuel, AdBlue® (urea solution), engine oil, hydraulic oil, cooling fluid and fluids from air conditioning systems must also be provided
- In order to dispose of harmful substances from the old trucks, the batteries and LPG container must be removed. The following must also be removed, collected and stored separately: fuel, AdBlue® (urea solution), engine oil, cooling fluid, hydraulic oil and fluids from air conditioning systems
- The following parts are to be collected separately and recycled: catalytic converters, metal components containing copper and aluminium, tyres, large plastic components (consoles, fluid containers) and glass

**NOTE**

*The operating company is responsible for adherence to the directives as well as additional country-specific regulations.*

# 5

# Maintenance

# Safety information for inspection and maintenance work

The industrial truck will only remain ready for operation at all times if the maintenance and inspection tasks are performed at regular intervals and in accordance with the information in the operating instructions.

Maintenance work may be performed only by competent persons. You can agree to have this work performed on the basis of a maintenance contract concluded with your service partner.

Whenever performing maintenance work, the industrial truck should be parked on a level surface and secured so that it cannot roll away.

The industrial truck must be switched off completely, and the battery male connector and switch key must be removed.

When working with the fork carriage and/or lift mast raised, make sure they are secured against accidental dropping.

Whenever work is carried out around the front of the truck, the lift mast must be secured to prevent it tilting backwards.

No modifications, in particular attachments or conversions, should be made to your industrial truck without the manufacturer's approval.

All servicing work should be followed by a function check and a test run performed on the industrial truck.

**⚠ WARNING**

Any side doors fitted could fall shut during maintenance work and trap staff.

For this reason, both doors should be opened and secured in place during servicing.

**⚠ CAUTION**

The industrial truck must always be properly labelled.

Missing or damaged identification plates and/or adhesive labels must be replaced. For the warehouse and order number, please consult the spare parts catalogue.

**ENVIRONMENT NOTE**

*Observe information about working with consumables.*

## Maintenance intervals

The inspection and maintenance intervals depend on the operating and application conditions of the industrial truck.

In the case of operation in extreme conditions (e.g. heat, cold or dust), the maintenance intervals must be reduced.

Contact your service partner.

# Working at the front of the truck

**⚠ DANGER**

**Risk of accident due to an unsecured lift mast.**

If the lift mast or fork carriage is raised, no work may be performed on the lift mast or at the front of the truck unless the appropriate safety measures are put in place.

- When securing, only use chains with sufficient load-bearing capacity.
- Contact the authorised service centre regarding this matter.

**⚠ CAUTION**

Possibility of damage to the ceiling!

– Note the maximum lift height of the lift mast.

### Securing the lift mast against tilting backwards

**⚠ DANGER**

**Risk of accident!**

This work must only be performed by an authorised service technician.

– To secure the lift mast against tilting back, contact the authorised service centre.

### Removing the lift mast

**⚠ DANGER**

**Risk of accident!**

This work must only be performed by an authorised service technician.

– Commission the authorised service centre to remove the lift mast.

### Securing the lift mast against falling off

**⚠ DANGER**

**Risk of accident!**

This work must only be performed by an authorised service technician.

– To secure the lift mast against falling, contact the authorised service centre.

## Lifting and jacking up

**⚠ DANGER**

**There is a risk to life if the truck tips over!**

If not raised and jacked up properly, the truck may tip over and fall off. Only the hoists specified in the workshop manual for this truck are allowed and are tested for the necessary safety and load capacity.

– Only have the truck raised and jacked up by the authorised service centre.

– Only jack the truck up at the points specified in the workshop manual.

The truck must be raised and jacked up for various types of maintenance work. The authorised service centre must be informed that this is to take place. Safe handling of the truck and the corresponding hoists is described in the truck's workshop manual.

# Inspection and maintenance data

## Inspection and maintenance data (3W)

| No. | Components | Consumable/equipment | Filling quantity/settings |
|---|---|---|---|
| 1 | Battery | Distilled water<br>Acid-free grease | As required<br>As required |
| 2 | Motor: Traction motor hydraulic motor | Cleaning apparatus for electrical equipment | As required |
| 3 | Hydraulic system standard, duplex and triplex masts — all lift heights | Hydraulic oil | Hydraulic oil (standard 3000 lift mast), 15L<br>Hydraulic oil (standard 5000 lift mast and duplex mast), 18.5L<br>Hydraulic oil (triple mast), 21L |
| 4 | Wheels | Drive wheel<br>Steering wheel | Torque value 210Nm<br>Torque value 210Nm |
| 5 | Disc wheel | Front disc wheel<br>Rear disc wheel | Front Wheels: 18×7-8 (1.5t), 200/50-10 (1.8t, 2.0t)<br>Rear Wheels: 15 × 4 1/2 -8 (1.5t), 140/55-9 (1.8t), 16 × 6-8 (2.0t) |
| 6 | Drive axle | Gear oil | Total oil volume: 1.6L (0.8L left, 0.8L right) |
| 7 | Steering axle, drive motor splines, tilt cylinder | Lubricating grease | As required |
| 8 | Lift mast and chain guide | Chain spray | As required |
| 9 | Installation of the drive axle | Hexagon head bolt M22x1,5x70-8.8-ZLS | Tightening torque 570 Nm |
| 10 | Drive axle connection to lift mast | Hexagon head bolt, M16×1.5x80-8.8 | Tightening torque 200 Nm |
| 11 | Installation of the tilt cylinder | Socket head screw M12x25-10.9-ZNS | Tightening torque 110 Nm |
| 12 | Chassis-overhead guard | Hexagon head bolt, M16x40-8.8-ZNS | Tightening torque 195 Nm |
| 13 | Chassis-counterweight | Hexagon head bolt, M30x130-8.8 | Tightening torque 1200 Nm |

**⚠ WARNING**

Unless approved by the manufacturer, customers are prohibited from disassembling the bolts of the overhead guard.

## Inspection and maintenance data (4W)

| No. | Components | Consumable/equipment | Filling quantity/settings |
|---|---|---|---|
| 1 | Battery | Distilled water<br>Acid-free grease | As required<br>As required |
| 2 | Motor: Traction motor hydraulic motor | Cleaning apparatus for electrical equipment | As required |
| 3 | Hydraulic system standard, duplex and triplex masts — all lift heights | Hydraulic oil | Hydraulic oil (standard 3000 mast), 16L<br>Hydraulic oil (standard 5000 mast, duplex mast), 19L<br>Hydraulic oil (triplex mast), 21.5L |
| 4 | Wheels | Drive wheel<br>Steering wheel | Torque value 210Nm<br>Torque value 210Nm |
| 5 | Pneumatic tyre inflation pressure | Drive wheel<br>Steering wheel | 1030 kPa<br>1000 kPa |
| 6 | Disc wheel | Front disc wheel<br>Rear disc wheel | Front: 6.5-10/14PR (1.8t/1.5t), 23*9-10/16PR (2.0t)<br>Rear: 5.0-8/10PR |
| 7 | Drive axle | Gear oil | Total oil volume: 3.3L (1.9L for the differential side, 1.4L for the braking pad side) |
| 8 | Steering axle, drive motor splined shaft, tilt cylinder | Lubricating grease | As required |
| 9 | Lift mast and chain guide | Chain spray | As required |
| 10 | Installation of the drive axle | Hexagon head bolt M22x1,5x70-8.8-ZLS | Tightening torque 570 Nm |
| 11 | Drive axle connection to lift mast | Hexagon head bolt, M16×1.5x80-8.8 | Tightening torque 200 Nm |
| 12 | Installation of the tilt cylinder | Socket head screw M12x25-10.9-ZNS | Tightening torque 110 Nm |
| 13 | Chassis-overhead guard | Hexagon head bolt, M16x40-8.8-ZNS | Tightening torque 195 Nm |
| 14 | Chassis-counterweight | Hexagon head bolt, M24X170-10.9 / M24X110-10.9 | Tightening torque 930 Nm |

**⚠ WARNING**

Unless approved by the manufacturer, customers are prohibited from disassembling the bolts of the overhead guard.

# Recommended fuels and oils

## Recommended fuels and oils (3W)

### ENVIRONMENT NOTE

*Follow recommendations regarding the use of consumables.*

| Component name | Quantity | | Original oil/fluid | International standard |
|---|---|---|---|---|
| | L | kg | | |
| Drive axle | 1.6 (0.8 on left and right) | | Gear oil | SAE80W-90 API-GL5 |
| | 0.2 | | Brake oil | Shell Spirax S4 ATF HDX |
| Hydraulic system | 15 | | Hydraulic oil (standard 3000 mast) | HLP 46 hydraulic oi<br>*Cold store option : HVLP32 hydraulic oil |
| | 18.5 | | Hydraulic oil (standard 5000 mast, duplex mast) | |
| | 21 | | Hydraulic oil (triplex mast) | |
| Hydraulic components such as tilt cylinder, etc. | As required | | Lubricating grease | KPF2N-20 |
| Pedals, joints | As required | | Lubricating grease | NLGI-2 |
| Chains | As required | | Chain spray | For the standard chain spray spare part no., see the spare parts catalogue |

### NOTE

*Using oil of a lower grade than that specified in the table may damage the truck and will void the warranty.*

### NOTE

*The brake fluid ShellSpirax S4 ATF HDX for the 3W model is maintenance-free for life.*

## Recommended fuels and oils (4W)

### ENVIRONMENT NOTE

*Follow recommendations regarding the use of consumables.*

| Component name | Quantity | | Original oil/fluid | International standard |
|---|---|---|---|---|
| | L | kg | | |
| Drive axle | 1.4 | | Gear oil (braking pad side) | SAE80W-90 API-GL5 |
| | 1.9 | | Gear oil (differential side) | SAE80W-90 API-GL5 |
| Hydraulic system | 16 | | Hydraulic oil (standard 3000 mast) | HLP 46 hydraulic oi<br>*Cold store option : HVLP32 hydraulic oil |
| | 19 | | Hydraulic oil (standard 5000 mast, duplex mast) | |
| | 21.5 | | Hydraulic oil (triplex mast) | |
| Hydraulic components such as tilt cylinder, etc. | As required | | Lubricating grease | KPF2N-20 |
| Pedals, joints | As required | | Lubricating grease | NLGI-2 |
| Chains | As required | | Chain spray | For the standard chain spray spare part no., see the spare parts catalogue |

### NOTE

*The drive axle gear oil filling quantity in the table above is the theoretical filling quantity once the gear oil has been completely drained. Given that it is not possible to drain the residual gear oil inside the drive axle during maintenance or when replacing the oil, it is recommended to fill the drive axle as follows: 1.7L on the differential side and 1.3L on the brake pad side.*

**NOTE**

*Using oil of a lower grade than that specified in the table may damage the truck and will void the warranty.*

# Regular maintenance

The following maintenance will help in improving the truck condition and ensure its functionality.

The user need complete this work as regularly as possible, in accordance with the operating environment.

- Clean the truck (as required).
- Check and tighten the wheel fastener (Please refer to the section **"Tightening the wheel nuts"**).
- **Clean and lubricate the steering axle (every two weeks as recommended, or at least every month).**
- Clean the lift mast chain and apply chain spray.
- Clean and lubricate the sideshift and attachments and check functionality and state of wear (in accordance with the procedures stipulated by the manufacturer).

# Service plan table

| Maintenance precautions |
| --- |
| Servicing work requires specialised knowledge and special tools.<br>Please contact your authorised service partners immediately. |

| Preparations |
| --- |
| Clean the truck (as required). |
| Check that all labels are complete and legible. |
| Read and delete error content. |
| Reset the maintenance interval. |

# 1000 hour service plan

| At operating hours | | | | | | | | | | Carried out | |
|---|---|---|---|---|---|---|---|---|---|---|---|
| 1000 | | 2000 | | 4000 | | 5000 | | 7000 | | | |
| 8000 | | 10000 | | 11000 | | 13000 | | 14000 | | ✓ | ✖ |
| **Drive mechanism and transmission system.** | | | | | | | | | | | |
| Check for leaks and check the mounting between the reduction gearbox and the traction motor. | | | | | | | | | | | |
| Change the reduction gearbox oil. Clean magnetic plugs, if necessary. (Perform once after 1000 operating hours, again after 3000 operating hours and then every 3000 operating hours) | | | | | | | | | | | |
| Check the installation of the transmission gear and tighten if necessary. | | | | | | | | | | | |
| Check the installation of the drive axle and tighten if necessary. | | | | | | | | | | | |
| Check wheel fittings and tighten, if necessary. | | | | | | | | | | | |
| Check tyres for wear and foreign objects. (Visual inspection) | | | | | | | | | | | |
| Clean and lubricate the steering axle. | | | | | | | | | | | |
| Clean the drive motor. | | | | | | | | | | | |
| **Chassis and bodywork** | | | | | | | | | | | |
| Check the mounting and tightness of the chassis, counterweight, overhead guard, drive axle, steering axle, tilt cylinder and tilt cylinder support. | | | | | | | | | | | |
| Check the tightness of the bolts connecting the lift mast onto the drive axle, and tighten if necessary. | | | | | | | | | | | |
| Check the side panel installation device and tension lock of the battery cover, and adjust if necessary. | | | | | | | | | | | |
| **Driver's cab** | | | | | | | | | | | |
| Check that the brake system (foot brake, parking brake, electric regenerative brake) is working properly and adjust if necessary. | | | | | | | | | | | |
| Check that the horn is working correctly. | | | | | | | | | | | |
| Check the pedal group for ease of movement, and lubricate. | | | | | | | | | | | |
| Lubricate the driver's seat guide. | | | | | | | | | | | |
| Check seat belt condition and correct operation. | | | | | | | | | | | |
| Check the joystick bellows and replace if damaged. | | | | | | | | | | | |
| **Electrical system** | | | | | | | | | | | |
| Check the working condition of the fan and clean the fan. | | | | | | | | | | | |
| Check the power module for dirt and clean if necessary. | | | | | | | | | | | |
| Check whether the main contactor cable is tightly installed and undamaged, and replace it if necessary. | | | | | | | | | | | |

| At operating hours | | | | | | | | | | Carried out | |
|---|---|---|---|---|---|---|---|---|---|---|---|
| 1000 | | 2000 | | 4000 | | 5000 | | 7000 | | | |
| 8000 | | 10000 | | 11000 | | 13000 | | 14000 | | ✓ | ✗ |
| Check the truck battery in accordance with manufacturer guidelines. | | | | | | | | | | | |
| Check that the seat switch and seat belt monitoring function are working normally. | | | | | | | | | | | |
| Check whether the module terminals are loose, and re-tighten if necessary. | | | | | | | | | | | |
| Check the condition and secure positioning of electric cables, plug connectors and cable connections. | | | | | | | | | | | |
| Check the fuses. | | | | | | | | | | | |
| **Hydraulic system** | | | | | | | | | | | |
| Clean the hydraulic pump motor. | | | | | | | | | | | |
| Check the tilt cylinder bearing for wear, and replace as required. | | | | | | | | | | | |
| Lubricate tilt cylinder bearings. | | | | | | | | | | | |
| Check that the tilt cylinder is firmly connected and tighten if necessary. | | | | | | | | | | | |
| Check the leak resistance of the hydraulics (visual inspection). | | | | | | | | | | | |
| Check the hydraulic oil level. | | | | | | | | | | | |
| **Lifting system** | | | | | | | | | | | |
| Check the working condition and installation of the lift mast, lifting chains and lifting cylinders, adjust the length of the lift mast chains if necessary, and clean and apply chain spray. | | | | | | | | | | | |
| Clean and lubricate the lift mast. | | | | | | | | | | | |
| Check the fork arms and the fork arm quick-release apparatus. | | | | | | | | | | | |
| Adjust length of the lift chain, clean and apply chain spray. | | | | | | | | | | | |
| Check the fork carriage stops (if installed). | | | | | | | | | | | |
| **Special equipment** | | | | | | | | | | | |
| Clean and lubricate the sideshift and attachments and check functionality and state of wear (in accordance with the procedures stipulated by the manufacturer). | | | | | | | | | | | |
| Check the preload of the double hoses for the attachments and adjust if necessary. | | | | | | | | | | | |
| Check the condition of the antistatic belt and earth (only when using tyres that are not antistatic). | | | | | | | | | | | |

# 3000 hour service plan

| At operating hours | | | | | | | | | | Carried out | |
|---|---|---|---|---|---|---|---|---|---|---|---|
| 3000 | | 6000 | | 9000 | | 12000 | | 15000 | | | |
| 18000 | | 21000 | | 24000 | | 27000 | | 30000 | | ✓ | ✖ |
| **This servicing work to be performed every 3000 hours or every 3 years.** | | | | | | | | | | | |
| | | | | | | | | | | | |
| **Carry out all 1000-hour maintenance work.** | | | | | | | | | | | |
| | | | | | | | | | | | |
| **Drive mechanism and transmission system.** | | | | | | | | | | | |
| Change the reduction gearbox oil (The first time was 1,000 hours, and then every 3,000 hours). Clean magnetic plugs, if necessary. | | | | | | | | | | | |
| **Hydraulic system** | | | | | | | | | | | |
| Replace the breather filter. | | | | | | | | | | | |
| Replace the suction filter insert. | | | | | | | | | | | |
| Change the return oil filter. | | | | | | | | | | | |
| Change the hydraulic oil. | | | | | | | | | | | |
| **Subsequent tasks** | | | | | | | | | | | |
| Check and adjust the date and time of the display unit. | | | | | | | | | | | |
| Carry out a functional test and test drive. | | | | | | | | | | | |
| Attach a maintenance sticker. | | | | | | | | | | | |

# Drive mechanism and transmission system

## Checking the oil level of the reduction gearbox ▷

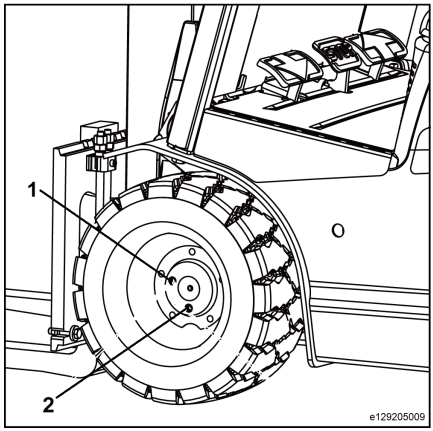


– Drive the truck until the oil plug (2) is in the lower, vertical down position ("6 o'clock" position). The oil level plug(1) should then be located obliquely above the oil plug (2).

– Apply the parking brake and switch off the truck.

– Clean the areas surrounding the oil level plug (1).

– Unscrew the oil level plug (1).

The oil level must reach the lower edge of the oil level plug hole. If necessary, top up with gearbox oil.

– Screw the oil level plug (1) back.

**NOTE**

- *Note that the retarders on the two sides of the drive axle are different, so you need to check the oil levels separately.*
- *Refer to the* ***Inspection and maintenance data*** *chapter for the tightening torque of the oil level plug*

## Checking the reduction gearbox for leaks ▷

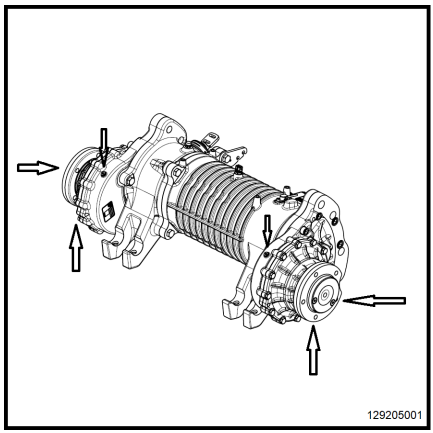


– Jack the truck at the front on the right or left side.

– Use wooden blocks to secure the truck.

– Check the fuelling ports on both sides of the speed reduction gearbox and the leak resistance of the oil drain plug and housing cover.

**NOTE**

*If there is leakage, please contact your authorised service partners.*

# Change the reduction gearbox oil

## Change the gearbox oil (remove the wheels)

NOTE

*Follow the regulations for the safe handling of oil and lubricating grease.*

– Operate the truck until the retarder is slightly warm. ▷

– Drive the truck until the oil plug(2)is in the lower, vertical down position ("6 o'clock" position).

– Jack the truck on either the right or left side, and secure the wheels with wooden blocks.

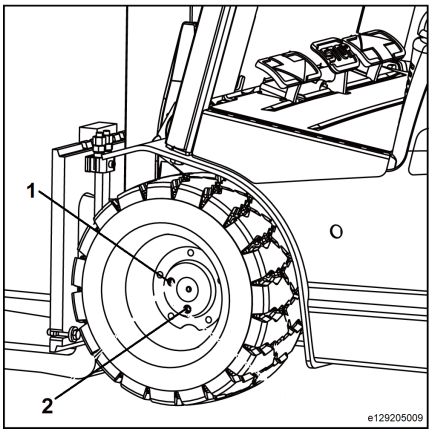


– Remove the wheels (see the ""Changing wheels"" section). ▷

– Remove the two wheels and lay them flat to drain the gear oil completely.

– Clean the oil level plug (1), the oil drain plug (3) and the fill plug (4) and surrounding areas.

– Place a container under the oil drain plug (3).

– Remove the oil level plug (1), the oil drain plug (3) and the fill plug (4) and surrounding areas. Drain the gear oil completely.

– Clean the magnet on the oil drain plug (3).

– Reinstall and tighten the magnetic oil drain plug (3).

– From the filling opening, pour gear oil into the retarder until oil reaches the lower edge of the oil level port (1).

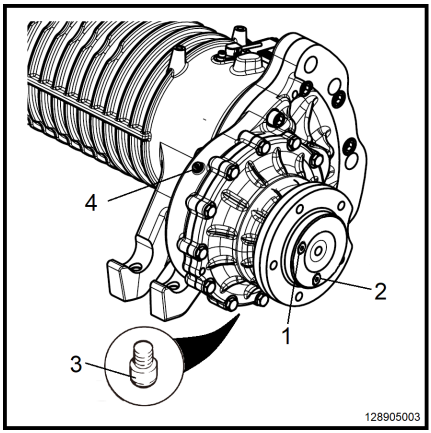

– Tighten the oil level port (1) and the fill plug (4).

– Change the gear oil in the reduction gearbox on the other side.

– Fit the wheels and lower the truck.

NOTE

*Refer to the **Inspection and maintenance data** chapter for the screw torque and gear oil filling quantity*

## Check for leaks and check the mounting between the reduction gearbox and the drive motor

– Raise the truck using hydraulic jacks at the front left-hand side and right-hand side of the truck.

– Place square timbers underneath.

– Check for leaks between the reduction gearbox and the traction motor.

– Check whether the fastening bolts connecting the reduction gearbox and the traction motor are tight enough and tighten if necessary.

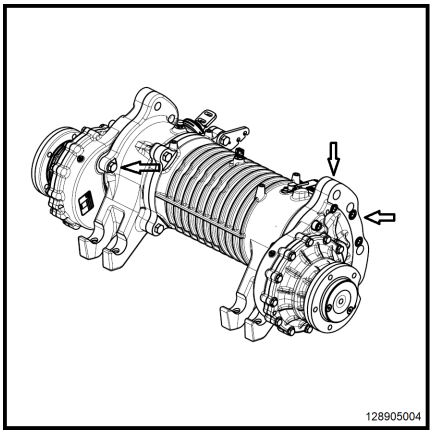


NOTE

*If there is leakage, please contact an authorised service partner if necessary. Refer to the **Inspection and maintenance data** section for the bolts' tightening torque.*

## Checking the wheels

### Checking for tyre damage
### Checking for foreign objects in the tyre

Secure the truck to prevent movement.

– Apply the parking brake.

– Put chocks behind the wheels that do not require lifting.

– Raise the truck using a jack until the wheels are off the ground.

– Prop up using a square timber.
– Check that the wheels are able to turn freely and remove all obstructions. ▷
– Change abraded or damaged tyres.

A minimum tread depth is not required with solid rubber tyres.

The wear of tyres on the same wheel shaft must be the same.

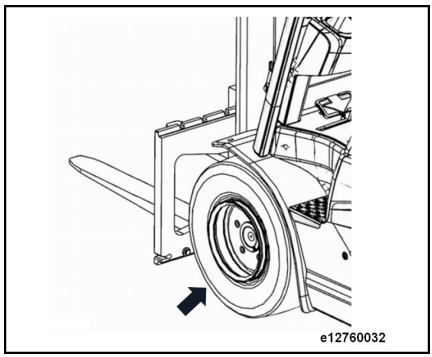


## Antistatic tyres ▷

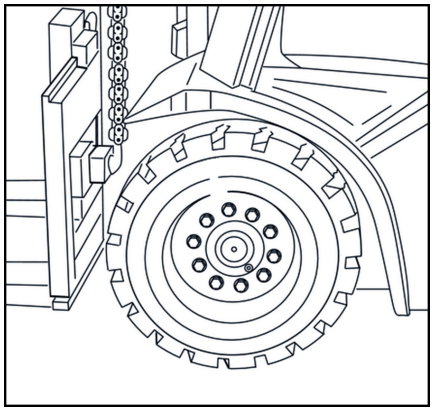

NOTE

*Under certain circumstances, the truck may become electrostatically charged. The charge level depends on a number of factors, such as the type of tyre, air humidity, floor covering etc.*

- *Excessive electrostatic charge is noticed when the electrostatic charge is discharged to the ground via the body of a person who touches the truck (electric shock) or when a spark passes from the truck to an earthed part (e.g. a metal shelf).*
- *With standard types of tyre (black pneumatic or solid rubber tyres), the high graphite content means that electrostatic charging is relatively rare. However, if non-mark tyres (light-coloured tyres) are used and the truck is driven into an area with a sealed floor, this electrostatic charge effect will frequently occur.*

**⚠ DANGER**

Risk of fire and explosion possible with electrostatic discharging.

Safety warning: Tyres are not electrically conductive.

The truck must always be earthed with an antistatic belt.

The antistatic belt must be in permanent contact with the ground.

Electrostatic charging is prevented by means of an antistatic belt, which is attached to the chassis under trucks with light-coloured tyres (non-marking tyres), while its free end trails along the ground.

Antistatic belts are made of a synthetic conductive material.

## Check the tyre inflation pressure

**NOTE**

*Low pneumatic pressure will reduce the service life of the tyres and the stability of the forklift.*

– Check the specific inflation pressures of the tyres.

– When necessary, inflate and deflate using the inflation valve.

**NOTE**

*See the "**Inspection and maintenance data**" chapter for the specified tyre inflation pressures.*

## Tightening the wheel nuts

Tighten the wheel fastenings before initial commissioning and whenever wheels are dismantled and installed or repairs are performed to the wheel fastenings.

Then re-tighten the wheel fastenings at the latest after 100 operating hours.

– Check the specific torque of the tyre hook-up and tighten them in a crosswise sequence if necessary.

**NOTE**

*Refer to the "**Inspection and maintenance data**" chapter for the tightening torque.*

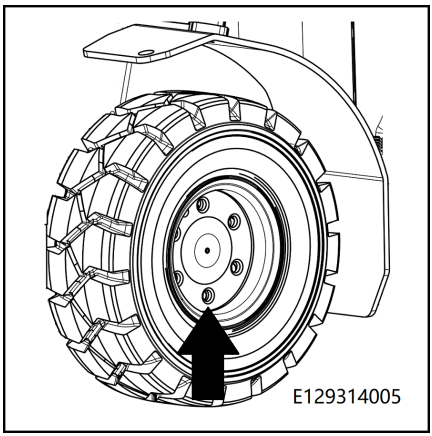

# Changing wheels

**⚠ DANGER**

**Risk of tipping.**

Tyres must be the same type, from the same manufacturer and have identical dimensions and profiles.

**⚠ CAUTION**

Note the weight of the truck.

Only use hydraulic jacks with a load capacity at least equal to the weight of the forklift truck.

**⚠ CAUTION**

When using wheels that are not antistatic, pay attention to the antistatic belt.

When changing wheels that are not antistatic, the truck must be equipped with an antistatic belt as these wheels are not electro conductive.

The antistatic belt must be in permanent contact with the ground.

Contact your local authorised service partners.

## Changing wheels

– Place a jack (1) to the front left-hand or right-hand side of the lift mast fixing or below the undercarriage. ▷

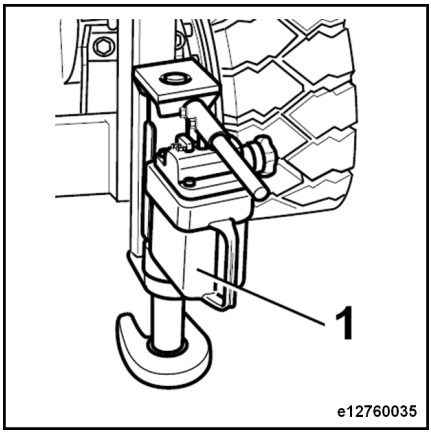

– Position a jack in the middle of the rear end of the counterweight.

Only jack up the truck from these lifting points.

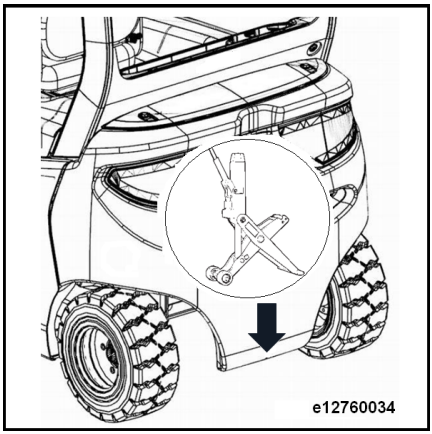


– Loosen all nuts on the wheel to be changed.

– Lift the truck with a hydraulic jack until the wheel is off the ground.

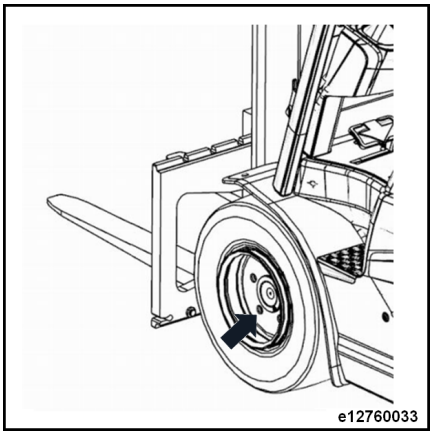


NOTE

*If front wheels are to be changed, place a chock behind the rear wheels to prevent the truck sliding backwards.*

– Use a hardwood strut to support the mast, undercarriage or counterweight, and then remove load from the jack.

– Unscrew the wheel nuts.

– Change the wheel.

– Fit the wheel nuts and tighten manually.

– Lift the truck, remove the supports and then lower the truck back down to the ground.

– Tighten front and rear wheel nuts.

NOTE

*Refer to the "Inspection and maintenance data" chapter for the tightening torque.*

## Checking the condition of the antistatic belt

**⚠ DANGER**

**Risk of fire and explosion possible in the event of electrostatic discharging.**

Non-marking tyres are not electrically conductive and must always be earthed with an antistatic belt.

The antistatic belt must be in permanent contact with the ground.

Under certain circumstances, the truck may become electrostatically charged. To avoid electrostatic charging, an antistatic belt made from conductive plastic must be fitted to the base of the chassis.

Information on electrostatic charging:

- The charge level depends on a number of factors, such as the type of tyre, air humidity, floor covering etc.
- Excessive electrostatic charging is noticeable when the electrostatic charge is discharged to the ground via the body of a person who touches the truck (electric shock) or when a spark passes from the truck to an earthed part (e.g. a metal shelf)
- With standard types of tyre (black pneumatic or solid rubber tyres), the high graphite content means that electrostatic charging is relatively rare
- If non-marking tyres (light-coloured tyres) are used and the truck is driven in an area with a sealed floor, this electrostatic charging effect will frequently occur
- Non-marking tyres are identified by the safety information on the tyre wall.

– **Check that the antistatic belt is securely seated on the base of the chassis, check the condition and check for wear.**

– **If the antistatic belt is damaged, replace the antistatic belt.**

## Clean and lubricate the steering axle

### Cleaning the steering axle

– Lower the fork carriage fully.

– Press the emergency off switch.

– Thoroughly clean the steering axle with water or a cold-water detergent.

**NOTE**

*After cleaning with a steam jet, lubrication is always recommended.*

**ENVIRONMENT NOTE**

*Follow recommendations regarding the use of consumables.*

### Lubricating the steering axle

NOTE

*Lubricate with lubricating grease. Please refer to the "**Recommended fuels and oils table**" chapter.*

– Lubricate the connecting rods and steering knuckles by adding grease via the grease nipples.

– Fill grease gun with grease until fresh grease overflows.

NOTE

*Regularly greasing in small amounts is better than greasing in large amounts on an infrequent basis.*

▷

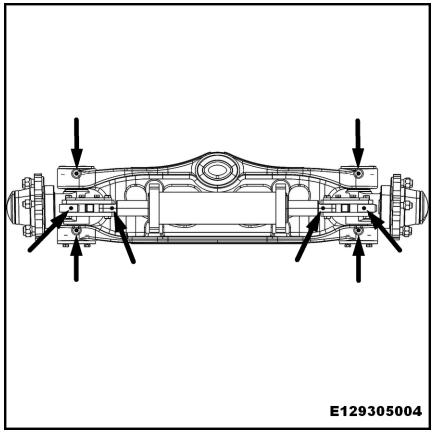


## Checking the brake system

**WARNING**

There is a risk of accident or death if the braking system is faulty.

Check that the truck's braking function is in perfect condition prior to each commissioning. In the case of defects in the brake system, the truck must be taken out of operation at once. The truck may only be restarted once the brake system is working completely normally.

If the braking system becomes faulty or worn, contact your authorised service partner.

### Checking the service brake

– When driving, take your foot off the accelerator pedal and depress the service brake pedal.

When the service brake pedal is depressed, the truck must immediately slow down to a complete stop.

**⚠ WARNING**

To prevent use of the brake pedal being impacted:

The rubber mat on the floorplate must stay in place and have no upturned edges.

The gap between the bottom edge of the brake pedal and the rubber mat must be at least 3 mm to ensure that maximum braking force can be applied.

There must be no obstacles in the footwell.

## Check the parking brake

– Drive the truck on a slope with a 15% gradient while transporting a load corresponding to the rated lifting capacity.

– Apply the parking brake as described in the **"Parking brake"** chapter.

– The parking symbol (1) on the screen of the display unit will turn on and remain lit. The truck is braked. ▷

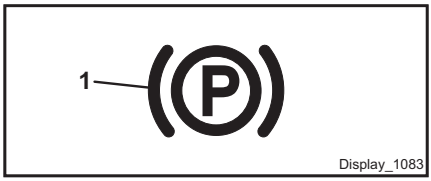


**The vehicle must remain stationary.**

– Release the parking brake as described in the **"Parking brake"** chapter.

– The parking brake symbol (1) on the display unit goes out.

**NOTE**

*If there is no 15% gradient, drive the truck at a slow speed on a level surface and apply the parking brake. The truck must be able to stop.*

## Checking the electronic regenerative brake

– The accelerator pedal is released while the truck is moving and the truck's driving speed will gradually decrease until it stops.

**NOTE**

*If required, the function can be adjusted using a diagnostic program to increase or decrease its effect. Please contact an authorised service partner.*

# Chassis and bodywork

## Checking the connecting bolts of the drive axle and lift mast ▷

– Check the installation of the bolts connecting the drive axle to the lift mast.

– Retighten if necessary.

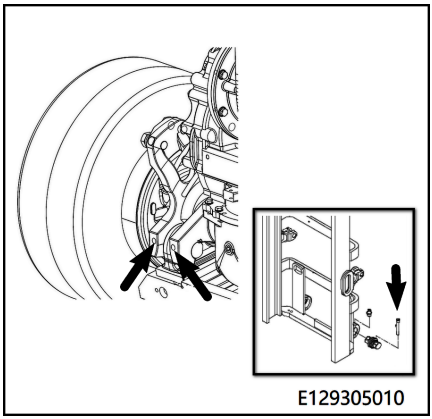


NOTE

*Check the **"Inspection and maintenance data"** chapter for the specific torque of the connecting bolts.*

## Checking the battery cover locking devices

The truck must not be started under any circumstances until the battery cover is fully closed.

When closing the battery cover, the battery cover locking devices must audibly click into place.

**⚠ CAUTION**

The truck must only be driven or operated after the battery cover is closed.

– Check and ensure that the locking devices (refer to the arrows) on the battery cover are working normally and close safely. ▷

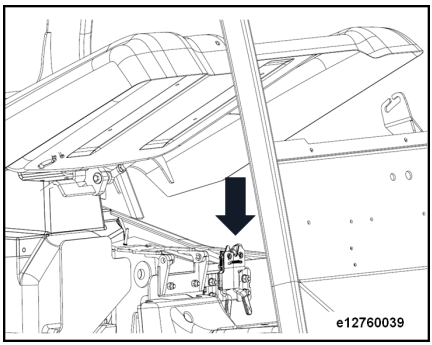

# Driver's cab

## Checking the pedal group for ease of movement and lubricating as required

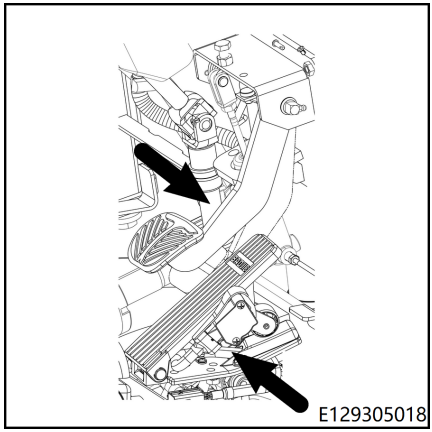


- Remove the rubber mat from the floorplate.
- Remove the floorplate.
- Check bolt and joint fastenings for secure positioning.
- Lightly oil the bearing, if necessary.
- Test functionality of the tension springs.
- Use lubricant to lubricate the contact face of the pedal.

NOTE

*Refer to the "**Recommended fuels and oils table**" for oil types.*

## Checking other bearings and connections and lubricating

ENVIRONMENT NOTE

*Follow recommendations regarding the use of consumables.*

- Check and lubricate the following bearings and fasteners.
  - Driver's seat guide.
  - Windscreen wiper bearings (special equipment)

### Other cleaning and lubricating

Performing maintenance every 1000 operating hours is generally sufficient when operating in a clean and dry internal environment. If used both indoors and outdoors, cleaning / lubricating is recommended between 500 and 1000 operating hours, or at least every 12 months.

## Adjust joysticks

This work should only be performed by authorised specialist staff.

Please contact an authorised service partner.

## Checking the joystick bellows ▷

- Check the bellows are positioned correctly and in good condition.
- Replace damaged bellows when necessary.

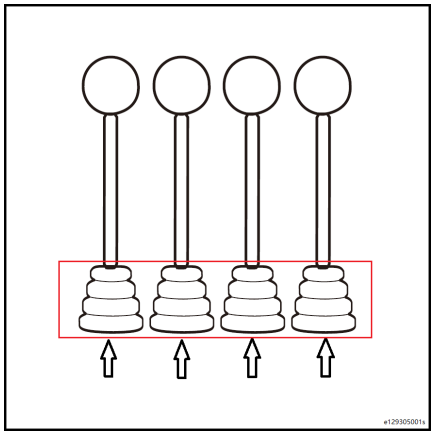

# Electrics/electronics

## Checking the control module for dirt

ENVIRONMENT NOTE

*Follow recommendations regarding the use of consumables.*

The module is installed inside the truck counterweight. ▷

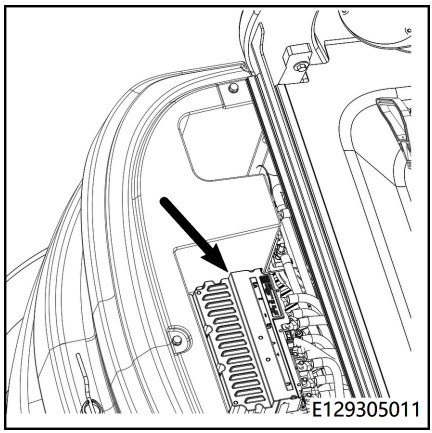


- Engage the parking brake.
- Switch off the truck.
- Press the emergency off switch.
- Remove the rear panelling on the counterweight.
- Check the radiator fins on the module for dirt.
- If necessary, clean the radiator fins with compressed air and/or cold cleaner solvent.

NOTE

*If contamination is particularly severe, please contact an authorised service partners.*

- Check whether the module terminals are loose and re-tighten if necessary.

## Checking the main contactor ▷

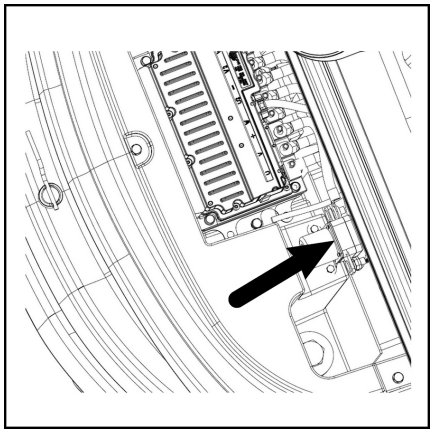

The main contactor is installed on the right side of the control module, inside the counterweight.

- Switch off the truck.
- Open the rear panelling of the counterweight.
- Check whether the cable connected to the main contactor is installed firmly.
- Check cable for damage and replace if necessary.

## Inspecting and maintaining the lithium-ion battery

**⚠ CAUTION**

For inspecting and maintaining the lithium-ion battery, refer to the lithium-ion battery manufacturer's user guide.

Strictly follow the lithium-ion battery manufacturer's user guide.

## Removing battery safety devices

There are two safety devices and one charging harness plug holder which must removed, before the battery can be deinstalled.

– Open the battery cover.

– Remove battery position limiter (1) and (2).

– Remove the charging harness plug holder (3).

– After removing the battery position limiter and charging harness plug, you can lift the battery out of the truck.

▷

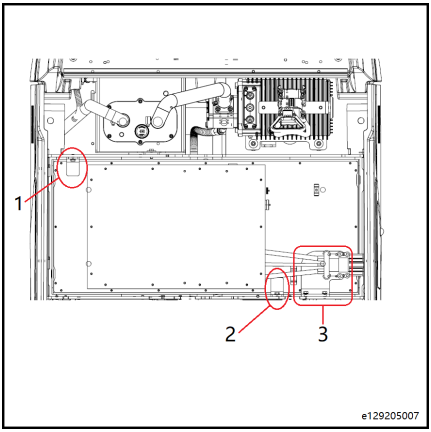


**NOTE**

*When you reinstall the battery or install a new battery, make sure to reinstall the safety devices.*

# Hydraulics

## Checking the hydraulic system for leaks

**⚠ CAUTION**

Hydraulic hoses become brittle over time!

- Do not store hydraulic hoses for more than two years.
- Do not use hydraulic hoses for more than two years if they are subject to a high level of wear.
- Comply with the specifications of "DGUV Rule 113-020" within Germany.
- Outside of Germany, observe the national regulations for the country of use.

**⚠ WARNING**

Risk of injury from hydraulic oil under pressure!

Hydraulic oil under pressure can escape from leaking pipes and lines and cause injuries.

- Before checking, release the pressure from the hydraulic system.
- Wear suitable protective gloves, protection goggles etc.

**NOTE**

*The hydraulic system must be depressurised prior to all work on the system.*

- Remove the rubber mat from the floorplate.
- Remove the floorplate.

**NOTE**

*Remove the accelerator connection plug from the floorplate.*

- Check the hydraulic pump of the working and steering hydraulics, valves, hoses and lines for leaks. Tighten pipe connections as necessary.
- Replace porous hoses.
- Check hydraulic lines for damage and replace if necessary.

**⚠ DANGER**

**Note that the hydraulic pump needs to cool down before inspection or maintenance, otherwise there is a risk of burns.**

## Checking the hydraulic oil level

**ENVIRONMENT NOTE**

*Follow recommendations regarding the use of consumables.*

**⚠ CAUTION**

Comply with oil level and oil quantity regulations.

When checking the hydraulic oil level, ensure that the lift mast is upright and the fork carriage is lowered.

Record the amount of oil used.

- Lower the forks fully.
- Apply the parking brake.
- Turn the key switch off.
- Open the battery hood. On the three-pivot model (3W), the hydraulic tank (2) is located on the left-hand side under the pedal plate. ▷

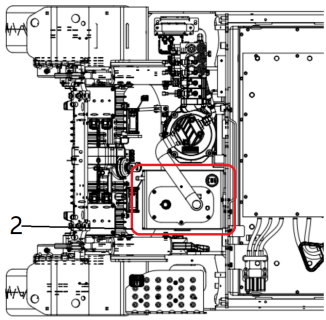

– Open the battery hood. On the four-pivot model (4W), the hydraulic tank (1) is located on the right-hand side at the rear of the truck. ▷

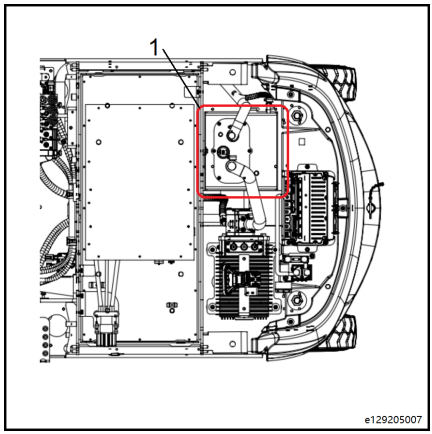


– Unscrew the breather filter (1) and dipstick (2) together. ▷
– Use a clean cloth to wipe the dipstick.
– Completely insert the breather filter and dipstick into the oil tank and then twist out again.

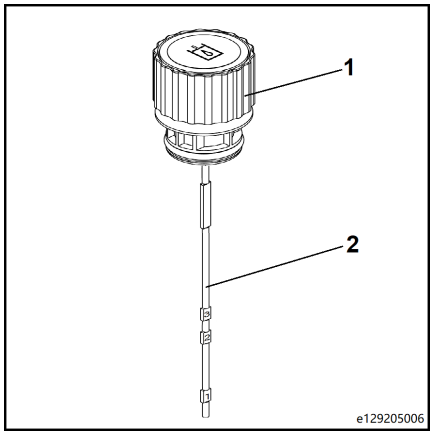

– Depending on the different types of mast, the oil level should reach the corresponding mark on the dipstick.
  - For standard lift masts with a maximum height of lower than S3000, fill the hydraulic oil up to the notch (1).
  - For standard lift masts with a maximum height of greater than S3000 and all duplex lift masts, fill the hydraulic oil up to the notch (2).
  - For all triple lift masts, fill the hydraulic oil up to the notch (3).

– When necessary, fill the hydraulic oil up to the corresponding notch.

– Screw the breather filter and dipstick back in again.

– Close the battery cover.

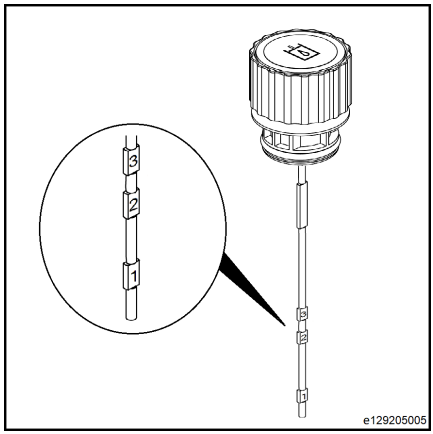


NOTE

*Refer to the "**Opening/closing the battery cover**" cowling for instructions on opening and closing the battery cover.*

## Checking the breather filter is working normally

NOTE

*The breather filter in the hydraulic oil tank is fitted with an expansion valve which allows for a small amount of pressure within the tank.*

ENVIRONMENT NOTE

*Follow recommendations regarding the use of consumables.*

– Switch on key switch.

– Lift the mast to its highest position and then lower it several times.

– Turn the key switch off.

– Open the breather filter (1) on the hydraulic oil tank. ▷

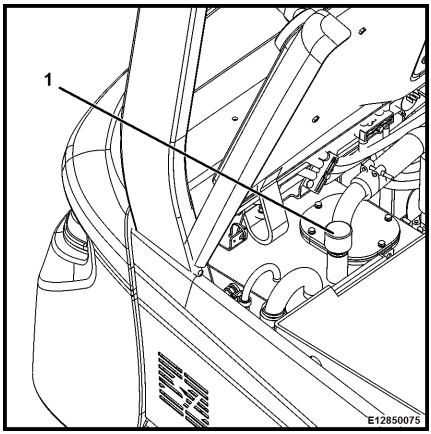


Ensure the sound of air escaping from the oil tank is heard.

– Replace the breather filter if you do not hear the sound of ventilation.

ENVIRONMENT NOTE

*Dispose of the old breather filter in an environmentally friendly manner.*

## Checking installation of the tilt cylinder ▷

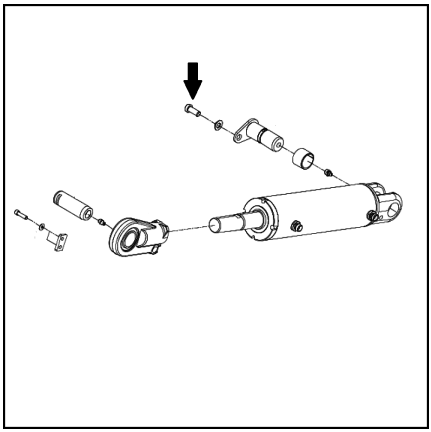

– Check installation of the tilt cylinder.

– Retighten if necessary.

NOTE

*Check the **"Inspection and maintenance data"** chapter for the specific torque of the connecting bolts.*

## Lubricating tilt cylinder bearings ▷

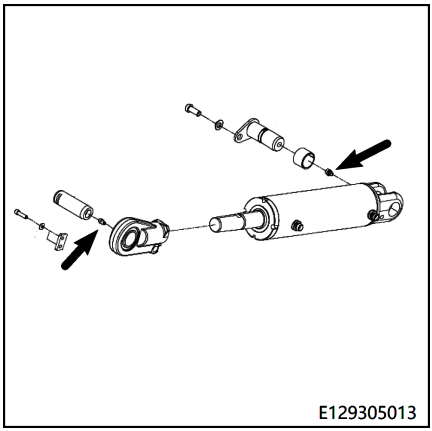


**ENVIRONMENT NOTE**

*Observe information regarding the use of consumables.*

– Check and lubricate the tilt cylinder bearings.

**NOTE**

*Refer to the "Recommended fuels and oils" table for oil types.*

# Lifting system

## Changing the fork arms

**⚠ DANGER**

**There is a risk of fatal injury from being run over if the truck rolls away.**

– Do not park the truck on a gradient.

– Apply the parking brake.

– Change the fork extension in a cordoned-off, safe location on a level surface.

**⚠ WARNING**

There is a risk of injury when changing the fork arms; the weight of the fork arms could cause them to fall on your legs, feet or knees.

The space to the left and right of the fork is a danger area.

– Wear protective gloves and safety shoes when changing the fork arms.

– Ensure that no one stands in the danger area!

– Do not pull on the fork arms.

– The fork arms must always be carried by two people; if necessary, use a hoist.

**NOTE**

- *It is recommended that a transport pallet is used to supporting the fork arms when they are being installed or removed. The pallet size depends on the size of fork arms in use. It should be large enough that the fork arms do not protrude after being placed on the pallet. This means the fork arms can be safely placed down and transported.*
- *Both fork arms can be pushed over onto one side.*

## Removing

▷

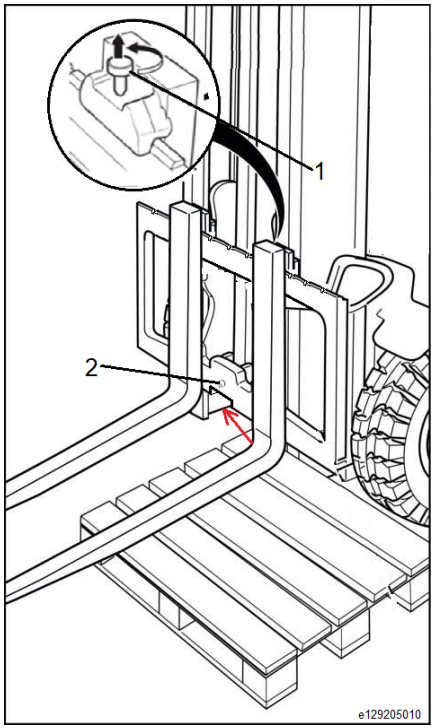


- Select the pallet according to the size of the fork arms.
- Position the pallet to the front of the fork carriage.
- Raise the fork carriage until the lower edges of the fork arms are approx. 3 cm higher than the height of the pallet.
- Actuate the parking brake and make sure it is applied securely.
- Turn the switch key to the left and pull it out.
- If there is mounting screw (2),undo the screw.
- Lift the pallet locking bolts (1) and turn them 90° to unlock the bolts.
- Push the fork to the middle of the fork rack and lift the end of the fork to remove the fork.

## Installing

- Position the fork arms on a pallet to the middle of the fork carriage.
- Push the fork arms onto the fork carriage from the centre to the both side.
- Pull the locking bolts (1) upwards and turn them 90° to unlock the bolts, then push the fork arms into the required position. Ensure that the locking lever snaps into place.
- After adjusting, return the fork arm lock bolts to their original positions and fit into the notches on the fork carriage, so that the fork arms are unable to move.
- If there is mounting screw (2), fit and tighten the locking screw (2).

**⚠ DANGER**

**There is a risk of fatal injury from a falling load or fork!**

- If there is mounting screw (2), tighten the locking screw (2) each time a fork is changed.
- It is not permitted to drive or to transport loads without the locking screw in place.

## Check the fork arms and the fork arm quick-release apparatus

– Check the fork arms for significant deformation, wear and damage.

E.g.: The thickness of the horizontal and vertical sections of the fork arms has been reduced to 90% of the designed thickness, or to the minimum thickness stipulated by the fork arm or forklift truck manufacturer, and other situations. If any fork arm defects appear as described above, use of the fork arms must be stopped.

– Check that the fork arm quick release apparatus is positioned correctly and is not damaged. ▷

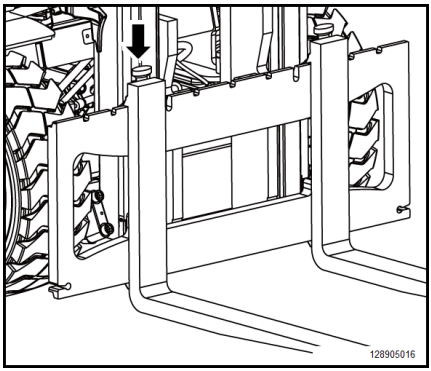


NOTE

*The load backrest prevents the forks from falling off the sides of the fork carriage. If the load backrest is removed from the truck, additional devices are required to prevent the forks from falling off.*

**WARNING**

If the fork arms/bayonet catch are not fully engaged, the fork arms may come off unexpectedly.

– Replace damaged parts.

## Checking the working condition and installation of the lift mast, lifting chains and lift cylinder

- Clean the mast channel and lifting chains. ▷

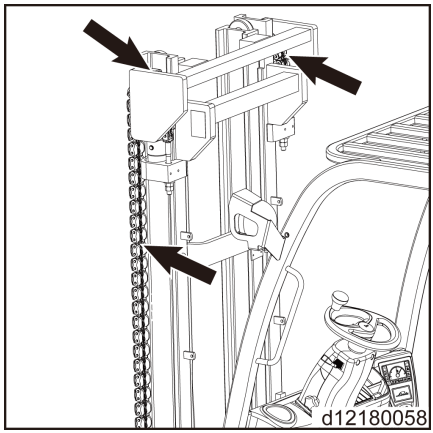


- Check the working status of the lifting chains, along with any signs of abrasion, paying particular attention to the area around the chain wheels.
- Check that the chain fixed pins are secure.
- Replace damaged lifting chains.

**NOTE**

*Damage to or loss of the plastic protective cases on individual chains will not affect the functioning and service life of the chains.*

- Check the status and tightness of the lift mast column, mast channel surfaces and roller.
- Check the tightness of the elastic lock rings at the piston rod connections on top of the lift mast.
- Check the installation of the lift cylinder.

# Adjusting the length of the lifting chains and lubricating using chain spray

## Adjusting the length of the lifting chains* ▷

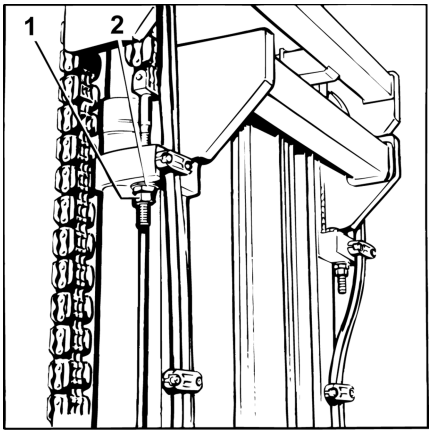


NOTE

Use over time will cause the lifting chains to stretch. Therefore, it is necessary to check and adjust the lengths of both the left and right chains.

– Fully lower the lift mast.
– Undo the lock nut (1).
– Adjust the adjustable nut (2) on the fixing bolt of the chain to modify the chain length. The guide roller under the fork carriage can extend out of the inner mast channel by a maximum of 25 mm.
– Tighten the lock nut (1).
– Adjust the second chain.

## Lubricating the chains with chain spray

– Use the designated chain spray to coat the chains and guide slots.

NOTE

If the truck is used in the food industry, please use lubricating grease in place of spray.

* Only for standard masts

### Adjusting the length of the lifting chains* ▷

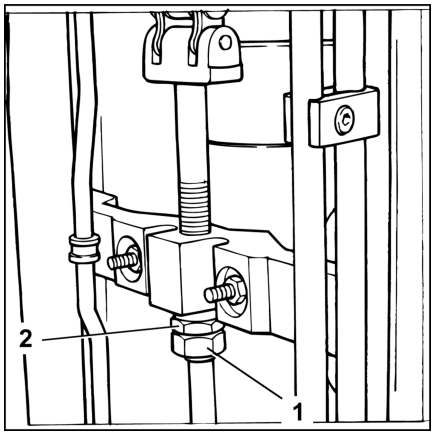


NOTE

Use over time will cause the lift chains to stretch, therefore it is necessary to check and adjust their lengths.

– Fully lower the lift mast.
– Undo the lock nut (1).
– Adjust the adjustable nut (2) on the fixing bolt of the chain to modify the chain length. The guide roller under the fork carriage can extend out of the inner mast channel by a maximum of 25 mm.
– Tighten the lock nut (1).

### Lubricating the chains with chain spray

– Use the designated chain spray to coat the chains and guide slots.

NOTE

If the truck is used in the food industry, please use lubricating grease in place of spray.

* Only for completely free lifting and triple masts

## Lubricating the lift mast and chains with chain spray

NOTE

*If there is excessive dust on the chain, affecting the ability of the lubricating oil to permeate the chain, the lifting chain must be cleaned.*

- Place an oil collecting trough under the lift mast
- Carry out cleaning with an alkyl derivative such as an industrial diesel fuel cleaning agent (please comply with the manufacturer's safety instructions).
- Additives may not be used if using a steam nozzle.
- Immediately blow the chain dry after cleaning to remove water both on the chain surface and inside the hinge pins. Move the chain several times during the blow-drying process.
- Immediately apply the designated chain spray and keep the chain moving while doing so.

▷

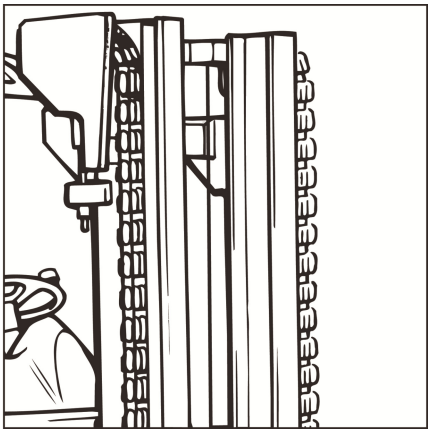

NOTE

*Lifting chains are safety components. The use of cold cleaning agents, chemical cleaning agents, corrosive liquids or liquids containing acid or chlorine will cause direct damage to the chains.*

# Special equipment

## Checking the preload of the double hoses (if equipped with attachments)

– The double hoses should be preloaded by stretching them 5-10mm per meter based on their original length.

– Move the hoses between the retaining clips so as to adjust the preload to the predetermined value.

▷

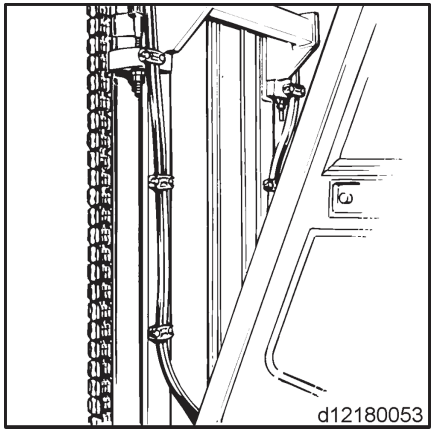


## Cleaning and lubricating the sideshift forks* and checking connections

– Use a steam gun to clean the sideshift forks.

– Check hydraulic lines for damage and replace if necessary.

– Check the tightness and level of abrasion of the hydraulic lines and fasteners. Tighten or replace if necessary.

– Add lubricating grease to the oil filling port on the fork carriage until fresh grease overflows from the filling port.

NOTE

*The sideshift forks must be lubricated each time the forklift truck is cleaned.*

*Optional part

# 6

# Technical datasheet

# Technical datasheet(RCE15 Li-Ion, RCE16 Li-Ion, RCE20 Li-Ion)

## Dimensions overview

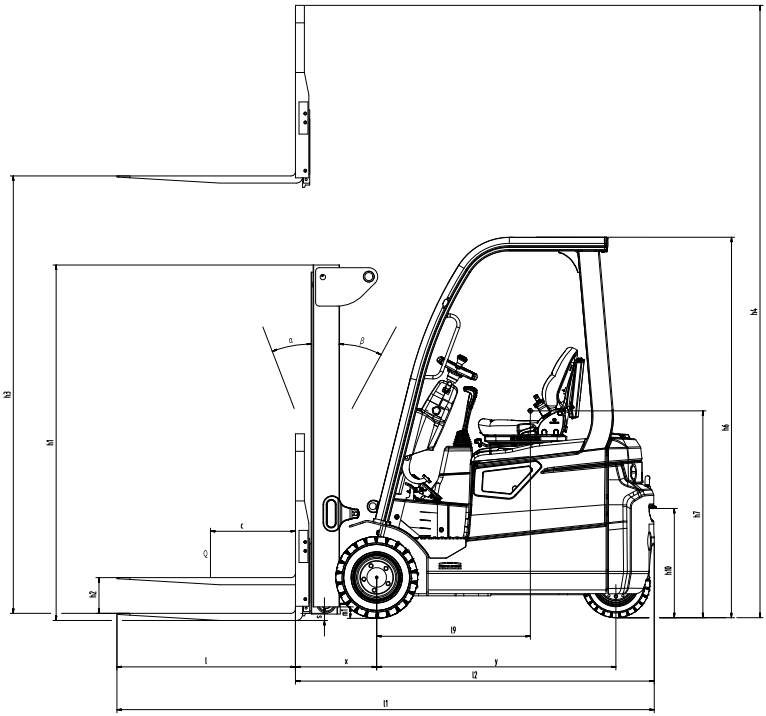


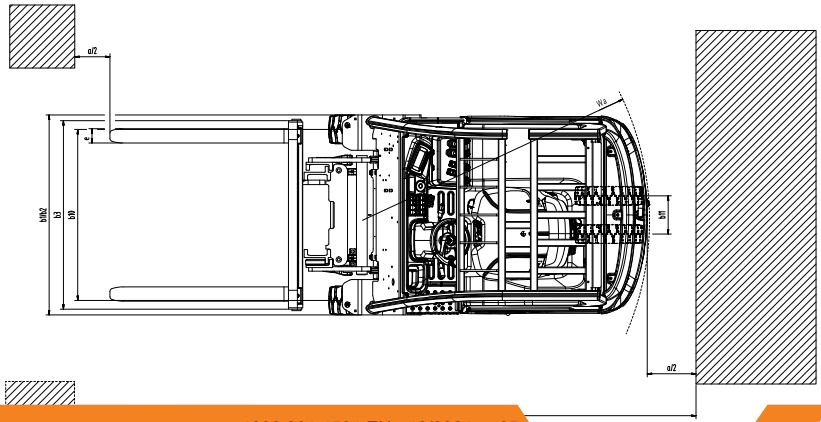

# Technical datasheet

| | | | | | | |
|---|---|---|---|---|---|---|
| Characteristics | 1.1 | Manufacturer | | KION JN | KION JN | KION JN |
| | 1.2 | Model | | RCE15 Li-ION | RCE16 Li-ION | RCE20 Li-ION |
| | 1.3 | Drive: Electric (battery, power supply...), diesel, petrol, LPG, AC | | Electric | Electric | Electric |
| | 1.4 | Operation | | Seated | Seated | Seated |
| | 1.5 | Rated load capacity | Q [t] | 1.5 | 1.6 | 2 |
| | 1.6 | Load centre distance | c [mm] | 500 | 500 | 500 |
| | 1.8 | Axle centre to fork face | x [mm] | 360 | 360 | 360 |
| | 1.9 | Wheelbase | y [mm] | 1340 | 1340 | 1370 |
| Weight | 2.1 | Service weight | [kg] | 2995 | 3099 | 3515 |
| | 2.2 | Axle load when fully loaded, front/rear | [kg] | 3942/533 | 4101/604 | 4824/695 |
| | 2.3 | Axle load without load, front/rear | [kg] | 1527/1468 | 1444/1655 | 1549/1966 |
| Wheels/chassis | 3.1 | Tyres: solid rubber, super elastic, pneumatic, polyurethane | | Solid rubber | Solid rubber | Solid rubber |
| | 3.2 | Tyre size, front wheel | | 18×7-8 SE | 18×7-8 SE | 200/50-10 SE |
| | 3.3 | Tyre size, rear wheel | | 15×4 1/2-8 SE | 15×4 1/2-8 SE | 16×6-8 SE |
| | 3.5 | Number of wheels, front/rear (x = drive wheel) | | 2x /2 | 2x /2 | 2x /2 |
| | 3.6 | Track width, front | b10 [mm] | 948 | 948 | 978 |
| | 3.7 | Track width, rear | b11 [mm] | 216 | 216 | 220 |
| Basic dimensions | 4.1 | Lift mast/fork carriage, forwards/backwards tilt angle | α/β [°] | 6°/7° | 6°/7° | 6°/7° |
| | 4.2 | Height of mast, lowered | h1 [mm] | 2050 | 2050 | 2050 |
| | 4.3 | Free lift height | h2 [mm] | 150 | 150 | 150 |
| | 4.4 | Lift height | h3 [mm] | 3000 | 3000 | 3000 |
| | 4.5 | Maximum height when lift mast is extended | h4 [mm] | 4040 | 4040 | 4040 |
| | 4.7 | Overhead guard (driver's cab) height | h6 [mm] | 2130 | 2130 | 2130 |
| | 4.8 | Driver's seat (SIP) height/ Platform height | h7 [mm] | 1154 | 1154 | 1154 |

## Technical datasheet(RCE15 Li-Ion, RCE16 Li-Ion, RCE20 Li-Ion)

| | | | | | | |
|---|---|---|---|---|---|---|
| | 4.8.1 | Distance from SIP to centre of drive axle | l9 [mm] | 861 | 861 | 861 |
| | 4.12 | Tow coupling height | h10 [mm] | 583 | 583 | 596 |
| | 4.19 | Overall length | l1 [mm] | 3125 | 3125 | 3160 |
| | 4.2 | Length to the front face of the vertical section of the forks | l2 [mm] | 1925 | 1925 | 1960 |
| | 4.21 | Total width | b1/b2 [mm] | 1120 | 1180 | 1180 |
| | 4.22 | Fork dimensions, according to DIN ISO 2331 | s / e / l [mm] | 40x80x1200 | 40x80x1200 | 40x80x1200 |
| | 4.23 | Fork carriage, according to ISO 2328, class/type A, B | | 2A | 2A | 2A |
| | 4.24 | Width of the fork carriage | b3 [mm] | 1040 | 1040 | 1040 |
| | 4.31 | Ground clearance at bottom end of mast, full load | m1 [mm] | 90 | 90 | 96 |
| | 4.32 | Ground clearance, centre of wheelbase | m2 [mm] | 100 | 100 | 106 |
| | 4.33 | Aisle width with pallet dimensions 1000 x 1200 (cross-ways) | Ast [mm] | 3251 | 3251 | 3296 |
| | 4.34 | Aisle width with pallet dimensions 800 x 1200 (cross-ways) | Ast [mm] | 3375 | 3375 | 3420 |
| | 4.35 | Outer turning radius | Wa [mm] | 1565 | 1565 | 1610 |
| | 4.36 | Smallest pivot point distance | b13 [mm] | - | - | - |
| Performance data | 5.1 | Travel speed, full/no load | [km/h] | 16/16 | 16/16 | 16/16 |
| | 5.2 | Lifting speed, full/no load | [m/s] | 0.44/0.53 | 0.40/0.53 | 0.35/0.53 |
| | 5.3 | Lowering speed, full/no load | [m/s] | 0.45/0.46 | 0.43/0.46 | 0.42/0.46 |
| | 5.6 | Maximum pulling force, full/no load | [N] | 11600/8600 | 11500/8700 | 11300/8700 |
| | 5.8 | Maximum climbing ability, with/without load | [%] | 18/20 | 18/20 | 18/20 |
| | 5.9 | Acceleration time, full/no load | [s] | 5.8/5.2 | 5.9/5.3 | 6.4/5.5 |
| | 5.1 | Service brake | | Mechanical/hydraulic | Mechanical/ hydraulic | Mechanical/ hydraulic |
| Motor | 6.1 | Drive motor rating S2 60 min | [kW] | 4.6x2 | 4.6x2 | 4.6x2 |
| | 6.2 | Lifting motor rating at S3 15% | [kW] | 11.5 | 11.5 | 11.5 |
| | 6.3 | Battery, according to DIN 43531/35/36 A, B, C, no. | | — | — | — |

| | | | | | | |
|---|---|---|---|---|---|---|
| | 6.4 | Battery voltage/rated capacity (5-hour discharge) | [V/Ah] | 76.8V/ 228Ah | 76.8V/ 228Ah | 76.8V/ 228Ah |
| | 6.5 | Battery weight | [kg] | 210 | 210 | 210 |
| | 6.6 | Energy consumption according to DIN EN 16796 | [kWh/h] | 4.4 | 4.5 | 4.7 |
| | 6.7 | Transporting capacity, according to VDI 2198 | [t/h] | 111 | 120 | 148 |
| | 6.8 | Energy consumption with specified transporting capacity, according to VDI 2198 | [t/kwh] | 17 | 21 | 25 |
| Other | 10.1 | Attachment working pressure | [bar] | 150 | 160 | 185 |
| | 10.2 | Oil flow for attachments | [l/min] | 22 | 22 | 22 |
| | 10.7 | Sound pressure level (at driver's position) | dB(A) | 68 | 68 | 68 |

**NOTE**

*The above truck parameters are standard and may change if a non-standard configuration is selected.*

# Technical datasheet(RCE16P Li-Ion, RCE20P Li-Ion)

## Dimensions overview

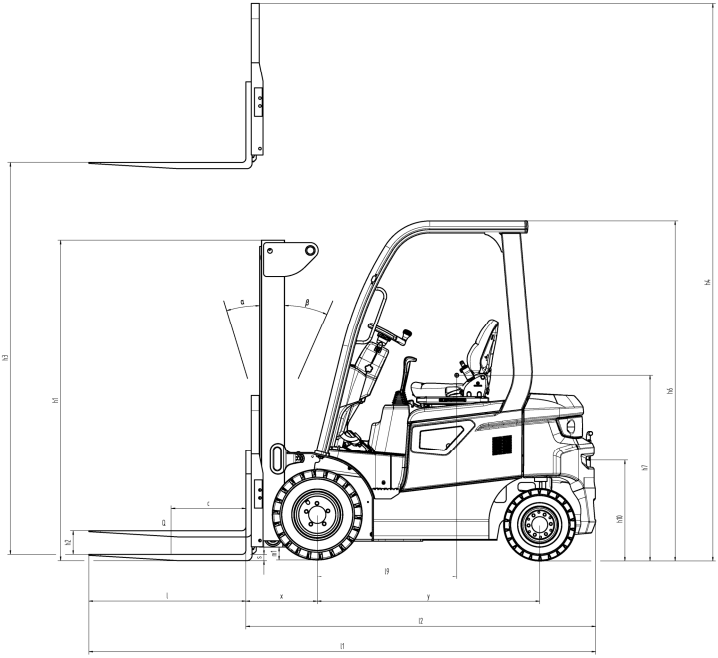


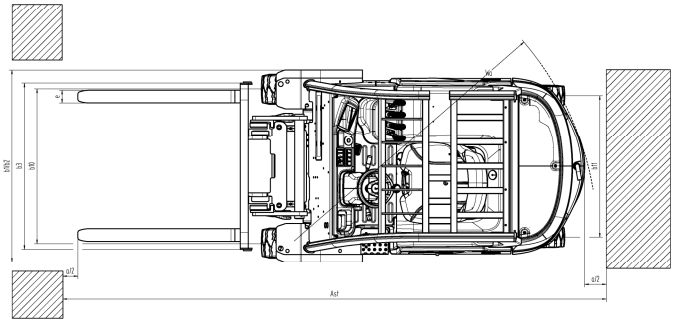

# Technical datasheet

| | | | | | |
|---|---|---|---|---|---|
| Characteristics | 1.1 | Manufacturer | | KION Jinan | KION Jinan |
| | 1.2 | Model | | RCE16P Li-Ion | RCE20P Li-Ion |
| | 1.3 | Drive: Electric (battery, power supply...), diesel, petrol, LPG, AC | | Electric | Electric |
| | 1.4 | Operation | | Seated | Seated |
| | 1.5 | Rated load capacity | Q [t] | 1.6 | 2.0 |
| | 1.6 | Load centre distance | c [mm] | 500 | 500 |
| | 1.8 | Axle centre to fork face | x [mm] | 425 | 425 |
| | 1.9 | Wheelbase | y [mm] | 1405 | 1405 |
| Weight | 2.1 | Service weight | [kg] | 3050 | 3455 |
| | 2.2 | Axle load when fully loaded, front/rear | [kg] | 4110/540 | 4772/683 |
| | 2.3 | Axle load without load, front/rear | [kg] | 1457/1593 | 1431/2024 |
| Wheels/ chassis | 3.1 | Tyres: solid rubber, super elastic, pneumatic, polyurethane | | Solid rubber | Solid rubber |
| | 3.2 | Tyre size, front wheel | | 6.50-10-S SE | 23X9-10-S SE |
| | 3.3 | Tyre size, rear wheel | | 5.00-8 SE | 5.00-8 SE |
| | 3.5 | Number of wheels, front/rear (x = drive wheel) | | 2x /2 | 2x /2 |
| | 3.6 | Track width, front | b10 [mm] | 932 | 998 |
| | 3.7 | Track width, rear | b11 [mm] | 900 | 900 |
| Basic dimensions | 4.1 | Lift mast/fork carriage, forwards/backwards tilt angle | α/β [°] | 6/10 | 6/10 |
| | 4.2 | Height of mast, lowered | h1 [mm] | 2062 | 2066 |
| | 4.3 | Free lift height | h2 [mm] | 150 | 150 |
| | 4.4 | Lift height | h3 [mm] | 3000 | 3000 |
| | 4.5 | Maximum height when lift mast is extended | h4 [mm] | 4040 | 4040 |
| | 4.7 | Overhead guard (driver's cab) height | h6 [mm] | 2150 | 2150 |
| | 4.8 | Driver's seat (SIP) height/Platform height | h7 [mm] | 1172 | 1172 |
| | 4.8.1 | Distance from SIP to centre of drive axle | l9 [mm] | 888 | 888 |
| | 4.12 | Tow coupling height | h10 [mm] | 618 | 617 |
| | 4.19 | Overall length | l1 [mm] | 3364 | 3399 |
| | 4.20 | Length to the front face of the vertical section of the forks | l2 [mm] | 2164 | 2199 |
| | 4.21 | Total width | b1/b2 [mm] | 1120 | 1220 |

## Technical datasheet(RCE16P Li-Ion, RCE20P Li-Ion)

| | | | | | |
|---|---|---|---|---|---|
| | 4.22 | Fork dimensions, according to DIN ISO 2331 | s / e / l [mm] | 40x80x1200 | 40x100x1200 |
| | 4.23 | Fork carriage, according to ISO 2328, class/type A, B | | 2 A | 2 A |
| | 4.24 | Width of the fork carriage | b3 [mm] | 1040 | 1040 |
| | 4.31 | Ground clearance at bottom end of mast, full load | m1 [mm] | 99 | 103 |
| | 4.32 | Ground clearance, centre of wheelbase | m2 [mm] | 110 | 114 |
| | 4.33 | Aisle width with pallet dimensions 1000 x 1200 (crossways) | Ast [mm] | 3495 | 3595 |
| | 4.34 | Aisle width with pallet dimensions 800 x 1200 (crossways) | Ast [mm] | 3695 | 3795 |
| | 4.35 | Outer turning radius | Wa [mm] | 1870 | 1970 |
| | 4.36 | Smallest pivot point distance | b13 [mm] | 536 | 536 |
| Performance data | 5.1 | Travel speed, full/no load | [km/h] | 15/15 | 15/15 |
| | 5.2 | Lifting speed, full/no load | [m/s] | 0.38/0.47 | 0.31/0.47 |
| | 5.3 | Lowering speed, full/no load | [m/s] | 0.44/0.47 | 0.42/0.48 |
| | 5.6 | Maximum pulling force, full/no load | [N] | 11400/7400 | 11200/7200 |
| | 5.8 | Maximum climbing ability, with/without load | [%] | 18/20 | 18/20 |
| | 5.9 | Acceleration time, full/no load | [s] | 5.9/5.2 | 6.2/5.1 |
| | 5.10 | Service brake | | Mechanical Hydraulics | Mechanical Hydraulics |
| Motor | 6.1 | Drive motor rating S2 60 min | [kW] | 10.2 | 10.2 |
| | 6.2 | Lifting motor rating at S3 15% | [kW] | 11.5 | 11.5 |
| | 6.3 | Battery, according to DIN 43531/35/36 A, B, C, no. | | — | — |
| | 6.4 | Battery voltage/rated capacity (5-hour discharge) | [V/Ah] | 76.8/228 | 76.8/228 |
| | 6.5 | Battery weight | [kg] | 210 | 210 |
| | 6.6 | Energy consumption according to DIN EN 16796 | [kWh/h] | 4.5 | 4.7 |
| | 6.7 | Transporting capacity, according to VDI 2198 | [t/h] | 114 | 144 |
| | 6.8 | Energy consumption with specified transporting capacity, according to VDI 2198 | [t/kwh] | 22 | 25 |
| Other | 10.1 | Attachment working pressure | [bar] | 160 | 185 |
| | 10.2 | Oil flow for attachments | [l/min] | 22 | 22 |
| | 10.7 | Sound pressure level (at driver's position) | dB(A) | 66 | 66 |

NOTE

*The above datasheet is standard configuration forklift truck parameters. For non-standard configuration forklift truck, the parameters may be different.*

## Eco-design requirements for electric motors and variable speed drives

All motors in this industrial truck are exempt from Regulation (EU) 2019/1781 because these motors do not meet the description given in Article 2 "Scope", Item (1) (a) and because of the provisions in Article 2 (2) (h) "Motors in cordless or battery-operated equipment" and Article 2 (2) (o) "Motors designed specifically for the traction of electric vehicles".

All variable speed drives in this industrial truck are exempt from Regulation (EU) 2019/1781 because these variable speed drives do not meet the description given in Article 2 "Scope", Item (1) (b).

## A


Additional capacity rating plate. . . . . 110
Address of manufacturer. . . . . I
Adjusting the fork spacing. . . . . 111
Adjusting the steering column. . . . . 81
Adjust joysticks. . . . . 164
Antistatic belt
Checking the condition. . . . . 160
Applying the parking brake. . . . . 95
Attachments
Special risks. . . . . 38


## B


Battery
Disposal. . . . . 19
Battery acid. . . . . 46
Battery cover — Open - Closed. . . . . 97
Battery hood gas spring. . . . . 99
Before exiting the truck. . . . . 126
Brake system. . . . . 93


## C


Capacity rating plate. . . . . 107
Changes to the industrial truck. . . . . 31
Change the reduction gearbox oil. . . . . 154
Changing the drive direction. . . . . 92
Changing the fork arms. . . . . 174
Changing wheels. . . . . 158
Check for leaks and check the mounting between the reduction gearbox and the drive motor. . . . . 155
Checking battery level. . . . . 96
Checking condition and performance. . . . 72
Checking installation of the tilt cylinder. . 172
Checking other bearings and connections and lubricating. . . . . 164
Checking the battery cover locking devices. . . . . 163
Checking the brake system. . . . . 161
Checking the breather filter is working normally. . . . . 171
Checking the connecting bolts connecting the lift mast to the drive axle. . . . . 163
Checking the control module for dirt. . . . 166
Checking the hydraulic oil level. . . . . 169
Checking the hydraulic system for leaks. 168
Checking the joystick bellows. . . . . 165
Checking the main contactor. . . . . 166
Checking the oil level of the reduction gearbox. . . . . 153
Checking the pedal group for ease of movement and lubricating as required. 164
Checking the preload of the double hoses (if equipped with attachments). . . . . 181
Checking the reduction gearbox for leaks. 153
Checking the tyre inflation pressure. . . . 157
Checking the wheels. . . . . 155
Check rechargeable battery condition lithium-ion battery. . . . . 103
Check the fork arms and the fork arm quick-release apparatus. . . . . 176
Check the working condition and installation of the lift mast and lifting chains. . . 177
Clean and lubricate the steering axle. . . 160
Cleaning and lubricating the sideshift forks* and checking connections. . . . . 181
Commissioning. . . . . 8
Conformity marking. . . . . 5
Connecting the rechargeable battery to an external charger. . . . . 102
Consumables. . . . . 46
Disposal. . . . . 47
Safety information for handling battery acid. . . . . 46
Safety information for handling hydraulic fluid. . . . . 46
Contact details. . . . . I
Copyright and trademark rights. . . . . 14
Crane loading. . . . . 132


## D


Daily inspection items. . . . . 68
Damage. . . . . 35
Damage, faults. . . . . 33
Danger to employees. . . . . 42
Date of edition of this manual. . . . . 16
Declaration of conformity. . . . . 6
Declaring the use of lithium-ion batteries. . 26
Defects. . . . . 35
Definition of directions. . . . . 18
Description of use and climatic conditions. 12
Dimensions overview. . . . . 184, 188
Display unit. . . . . 60

Disposal
Battery. . . . . 19
Components. . . . . 19
Disposal of old trucks. . . . . 138
Documentation scope. . . . . 13
Driver qualification for using lithium-ion batteries. . . . . 26
Driver rights, duties and rules of behaviour. 29
Drivers. . . . . 29
Driving. . . . . 90
Ascending gradients. . . . . 122
Descending gradients. . . . . 122
Driving on loading bridges. . . . . 124
Driving onto lifts. . . . . 123

## E

EC declaration of conformity in accordance with the Machinery Directive. . . . . 6
Electronic regenerative braking. . . . . 94
Emergency exit from driver's cab with windows. . . . . 49
Emergency off switch. . . . . 82

## F

Fire extinguisher. . . . . 23
First-aid measures for working with lithium-ion batteries
Maintenance personnel. . . . . 99
Fork arms
Length. . . . . 35
Forward travel. . . . . 91

## G

General. . . . . 4
General view. . . . . 54
General view of driver’s compartment. . . . 57

## H

Handling gas springs and accumulators. . 36
Hazard assessment. . . . . 26
Hazards and countermeasures. . . . . 40
Horn operation. . . . . 77
Hydraulic fluid. . . . . 46

## I

Illustrations. . . . . 18
Improper use. . . . . 10
Inspecting and maintaining the lithium-ion battery. . . . . 167
Inspection and maintenance data. . . . . 142
Insulation testing. . . . . 44
Drive battery test values. . . . . 45
Test values for the truck. . . . . 45
Insurance cover on company premises. . . 31
Intended use. . . . . 9

## J

Jacking up. . . . . 141

## L

Lifting. . . . . 141
Lift mast
Removing. . . . . 141
Securing against falling off. . . . . 141
Securing against tilting backwards. . . 141
List of abbreviations. . . . . 16
Lithium-ion batteries
Battery weight and dimensions. . . . . 101
Declaring the use of. . . . . 26
Driver qualification. . . . . 26
Fire protection measures. . . . . 100
First-aid measures. . . . . 99
Hazard assessment. . . . . 26
Maintenance personnel. . . . . 100
Permissible batteries. . . . . 26
Procedure in the event of a fire. . . . . 26
Safety regulations. . . . . 99, 101
Special features. . . . . 25
Transport outside the premises. . . . . 27
Load
Determining visibility conditions when driving with a load. . . . . 113
Driving. . . . . 119
Picking up. . . . . 115
Setting down. . . . . 120
Load centre distance and load capacity. 107
Lubricating the lift mast and chains with chain spray. . . . . 179
Lubricating tilt cylinder bearings. . . . . 173

## M

Maintenance intervals. . . . . 140
Manually lowering the forks. . . . . 50
Medical devices. . . . . 34
Misuse of safety systems. . . . . 35

## N


Nameplate. . . . . 7
Noise level. . . . . 47


## O


Operating attachments. . . . . 105
Operating company. . . . . 28
Operating instructions
Issue date. . . . . 14
Operating safely. . . . . 22
Operating the lifting device. . . . . 104
Overhead guard
Drilling. . . . . 33
Roof loads. . . . . 33
Welding. . . . . 33


## P


Packaging. . . . . 19
Parking brake. . . . . 95
Periodic inspection items. . . . . 69
Permissible lithium-ion batteries. . . . . 26
Picking up a load. . . . . 112
Pre-shift checks. . . . . 66
Precautions. . . . . 11
Procedure in the event of a fire when using lithium-ion batteries. . . . . 26
Prohibition of use by unauthorised persons. 30


## R


Recommended fuels and oils. . . . . 145
Regular inspections. . . . . 44
Regular maintenance. . . . . 148
Relays and fuses overview. . . . . 62
Releasing the parking brake. . . . . 95
Removing battery safety devices. . . . . 167
Residual dangers. . . . . 37
Residual risks. . . . . 37
Retrofitting. . . . . 31
Reverse travel. . . . . 92


## S


Safety guidelines. . . . . 22
Safety information
Active medical equipment. . . . . 25
Gas springs. . . . . 24
Non-ionising radiation. . . . . 25
Speed reduction. . . . . 23
Welding work. . . . . 23
Safety information for inspection and maintenance work. . . . . 140
Safety inspection. . . . . 44
Safety regulations for handling lithium-ion batteries. . . . . 99
Battery weight and dimensions. . . . . 101
Fire protection measures. . . . . 100
Maintenance personnel. . . . . 100
Safety regulations for working on the lift mast. . . . . 140
Safety regulations for working with lithium-ion batteries. . . . . 101
Safety regulations when driving. . . . . 51
Scope of the documentation
CO solutions. . . . . 13
Seat belt monitoring and alarm function. . 76
Serial number. . . . . 7
Service plan before first start. . . . . 66
Service plan table. . . . . 149
Setting chocks. . . . . 129
Setting the display unit. . . . . 87
Signal terms. . . . . 15
Spare parts list. . . . . II
Special risks. . . . . 38
Stability. . . . . 27, 38
Starting the truck. . . . . 85
Steering axle type. . . . . 55
Steering system
Checking for correct function. . . . . 81
Switching the truck on and off. . . . . 85
Switch panel. . . . . 61


## T


Technical datasheet. . . . . 185, 189
Technical description. . . . . 2
Tightening the wheel nuts. . . . . 157
Tip-over of the truck. . . . . 27
Tow coupling. . . . . 125
Towing. . . . . 130
Transport. . . . . 128
Transporting pallets. . . . . 114
Transporting suspended loads. . . . . 114
Transporting the lithium-ion battery. . . . . 27
Troubleshooting guide. . . . . 69
Turn on and off lithium battery. . . . . 84


## U


Update of this manual. . . . . 16

Using working platforms. . . . . 12

V

Vibration frequency. . . . . 48
Visibility when driving with a load. . . . . 113

W

Warning Label Diagram. . . . . 58
Warning regarding non-original parts. . . . 33
Wheels and tyres
Safety principles. . . . . 34
Working at the front of the truck. . . . . 140

STILL GmbH

1292 801 1591 EN - 10/2024 - 05