Original instructions

LPG truck

RX70-20/600
RX70-25
RX70-25/600
RX70-30
RX70-30/600
RX70-35

7400 7401 7402 7403 7404 7405

first in intralogistics

57378011501 EN - 12/2023 - 09

Address of manufacturer and contact details ▷

STILL GmbH
Berzeliusstraße 10
22113 Hamburg, Germany
Tel. +49 (0) 40 7339-0
Fax: +49 (0) 40 7339-1622
Email: info@still.de
Website: http://www.still.de

Rules for the operating company of industrial trucks

In addition to these operating instructions, a code of practice containing additional information for the operating companies of industrial trucks is also available.

This guide provides information for handling industrial trucks:

- Information on how to select suitable industrial trucks for a particular area of application
- Prerequisites for the safe operation of industrial trucks
- Information on the use of industrial trucks
- Information on transport, initial commissioning and storage of industrial trucks

Internet address and QR code ▷

The information can be accessed at any time by pasting the address **https://m.still.de/vdma** in a web browser or by scanning the QR code.

Spare parts list

You can request to download the spare parts list by copying and pasting the address **https://sparepartlist.still.eu** into a web browser or by scanning the QR code shown to the side.

On the web page, enter the following password: **Spareparts24!**

On the next screen, enter your email address and truck serial number to receive an email with the link and download the spare parts list.

2511

1 Foreword

Your truck . . . 2
Description of the truck . . . 2
General . . . 4
Conformity marking . . . 5
Declaration that reflects the content of the declaration of conformity . . . 6
Accessories . . . 7
Labelling points . . . 8
Nameplate . . . 12
Serial number . . . 12
StVZO (Road Traffic Licensing Regulations) information . . . 13

Using the truck . . . 14
Intended use . . . 14
Proper use during towing . . . 14
Improper use . . . 14
Place of use . . . 15
Using working platforms . . . 16

Information about the documentation . . . 17
Scope of the documentation . . . 17
Supplementary documentation . . . 18
Issue date and topicality of the operating instructions . . . 19
Copyright and trademark rights . . . 19
Explanation of signal terms used . . . 20
Definition of directions . . . 20
Schematic views . . . 21
List of abbreviations . . . 21

Environmental considerations . . . 24
Packaging . . . 24
Disposal of components and batteries . . . 24

2 Safety

Definition of responsible persons . . . 26
Operating company . . . 26
Specialist . . . 26
Drivers . . . 27

Basic principles for safe operation . . . 29
Insurance cover on company premises . . . 29
Modifications and retrofitting . . . 29
Changes to the overhead guard and roof loads . . . 30
Warning about any manipulation of the internal combustion engine . . . 31

Warning regarding non-original parts . . . 31
Damage, defects and misuse of safety systems . . . 32
Tyres . . . 32
Medical equipment . . . 33
Exercise caution when handling gas springs and accumulators . . . 34
Length of the fork arms . . . 34

Residual risk . . . 36
Residual dangers, residual risks . . . 36
Special risks associated with using the truck and attachments . . . 37
Overview of hazards and countermeasures . . . 40
Danger to employees . . . 42

Safety tests . . . 44
Carrying out regular inspections on the truck . . . 44
Carrying out regular safety inspections on the LPG system . . . 44
Regularly checking the level of harmful substances in the exhaust gas . . . 46
Insulation testing . . . 46

Safety regulations for handling consumables . . . 48
Permissible consumables . . . 48
Oils . . . 48
Hydraulic fluid . . . 50
Battery acid . . . 51
LPG . . . 51
Coolant and cooling fluid . . . 55
Disposal of consumables . . . 56

Emissions . . . 57

3 Overviews

Overview . . . 62

Driver's compartment . . . 63

Shelves and cup holders . . . 64

Operating devices and display elements . . . 65
Display/control unit "STILL Easy Control" . . . 65
Operating devices for hydraulic and driving functions . . . 66
Double mini-lever . . . 67
Triple mini-lever . . . 67
Quadruple mini-lever . . . 71
Joystick 4Plus . . . 73
Fingertip . . . 74
Travel direction selector and indicator module (variant) . . . 75

4 Operation

Checks and tasks before daily use 78
Visual inspections and function checking 78
Climbing in and out of the truck 81
Operating the signal horn 83
Driver's cab 83
Checking the condition of the wheels and tyres 84
Checking the brake system for correct function 85
Checking the steering system for correct function. 88
Function checking of the automatic mast vertical positioning function (variant) 88
Checking the automatic tow coupling (variant) 89
Lubricating the automatic tow coupling (variant) 89

Driver's seats 91
Adjusting the MSG 65 and MSG 75 driver's seat 91
Adjusting the armrest. 97
Longitudinal horizontal suspension (variant) 97
Seat belt 99

Pre-Shift Check 103
Description of the Pre-Shift Check (variant) 103
Process 104
All questions 105
Defining the question sequence 106
Displaying the history 108
Defining the shift start 110
Resetting the truck restrictions 114

Driver profiles. 117
Driver profiles (variant) 117
Selecting driver profiles 117
Creating driver profiles 119
Renaming driver profiles 121
Deleting driver profiles. 124

Switching on and starting. 126
Engine preheating (variant) 126
Opening the LPG cylinder valve 127
Opening the LPG cylinder valve for a double-cylinder holder 128
Opening the shut-off valve of an LPG tank (variant) 130
Switching on the key switch. 132
Access authorisation with PIN code (variant) 133
Access authorisation for the fleet manager (variant). 135
Starting the engine 138

Lighting 141
Retrofitting lighting equipment 141
Meaning of the symbols 141
Driving lights 142
Working spotlights 142
Working spotlight for reverse travel (variant) 144
Turn indicators 144
Hazard warning system 146
StVZO equipment 147
Rotating beacon 148
STILL SafetyLight® and STILL SafetyLight 4Plus® (variants) 148

Blue-Q efficiency mode 150
Functional description 150
Switching Blue-Q on and off 151
Switching off additional consumers 152
STILL Classic and sprint mode 153

Driving 155
Safety regulations when driving 155
Roadways 157
Selecting drive programmes 1 to 3 160
Selecting drive programme A or B 161
Configuring drive programmes A and B 161
Selecting the drive direction 163
Actuating the drive direction switch with the mini-lever version 164
Actuating the vertical rocker button for the "drive direction", Joystick 4Plus version 164
Actuating the drive direction switch with the Fingertip version 164
Actuating the drive direction switch, mini-console version 165
Starting drive mode 165
Starting drive mode, dual pedal version (variant) 168
Operating the service brake 170
Actuating the electric parking brake 171
Malfunctions in the electric parking brake 175
Steering 180
Speed reduction when the fork carriage is raised (variant) 181
Engine automatic shut-off function (variant) 185
Engine stalls because the evaporator has iced over 186
Cruise control (variant) 189

Parking 193
Parking the truck securely and switching it off 193
Wheel chock (variant) 195

Lifting 196
Lifting system variants 196
Automatic mast vertical positioning (variant) 196
Types of lift mast 198
Malfunctions during lifting mode 199
Hydraulic blocking function 200
Lifting system operating devices 201
Controlling the lifting system using a double mini-lever 202
Controlling the lifting system using a triple mini-lever 204
Controlling the lifting system using a quadruple mini-lever 206
Controlling the lifting system using the Joystick 4Plus 207
Controlling the lifting system using the Fingertip 206
Selecting load programs 1 to 3 211
Fork wear protection (variant) 212
Changing the fork arms 213
Fork extension (variant) 215
Operation with reversible fork arms (variant) 217

Handling loads 219
Safety regulations when handing loads 219
Capacity rating plate 219
Picking up loads 224
Danger area 225
Transporting pallets 226
Transporting suspended loads 227
Picking up a load 228
Transporting loads 232
Setting down loads 234
Driving on ascending and descending gradients 236
Shake function (variant) 237
Driving on lifts 241
Driving on loading bridges 242

Lift height-dependent assistance systems 243
Optical lift height measuring system (variant) 243
Lift height display (variant) 247
easy Target (variant) 247
Configuring easy Target 248
Operating easy Target 251
Intermediate lift cut-out (variant) 255
Lift transition damping (variant) 260
Lift mast end-stop damping (variant) 260
End lift cut-out (variant) 261

Speed reduction when the fork carriage is raised (variant) 264
Electrical fork wear protection (variant) 269

Tilt angle-dependent assistance systems 272
Mast tilt angle display (variant) 272
Tilt end stop damping (variant) 272
Automatic mast vertical positioning (variant) 196
Function checking of the automatic mast vertical positioning function (variant) 88
Calibrating the automatic mast vertical positioning 196

Load-dependant assistance systems 277
Overload detection (variant) 277
Dynamic Load Control 1 (variant) 277
Dynamic Load Control 2 (variant) 277
Load measurement (variant) 283
Calibrating the load measurement. 284
Precision load measurement (variant). 286
Tare function (variant) 288
Total load (variant). 290

Zeroing the assistance systems 293
Zeroing process. 293

Attachments. 296
Fitting attachments 296
Depressurising the hydraulic system. 299
General instructions for controlling attachments 302
Attachment example for the connection of the auxiliary hydraulics. 303
Adjusting the hydraulic speed for attachments 304
Controlling attachments using a double mini-lever 307
Controlling attachments using the double mini-lever and the 5th function 309
Controlling attachments using a triple mini-lever. 311
Controlling attachments using the triple mini-lever and the 5th function 313
Controlling attachments using a quadruple mini-lever. 315
Controlling attachments using the quadruple mini-lever and the 5th function. 317
Controlling attachments using the Joystick 4Plus 319
Controlling attachments with Joystick 4Plus and the 5th function. 320
Controlling attachments using the Fingertip 321
Controlling attachments using the Fingertip and the 5th function 323
Clamp locking mechanism (variant) 324
Picking up a load using attachments. 325

Auxiliary equipment 326
Actuating the windscreen wipers and windscreen washers (variant) 326
Filling the washer system 328
FleetManager (variant) 328

Shock recognition (variant) 328
STILL neXXt fleet (variant) 329
Driver restraint systems (variants) 329
Ceiling sensor (variant) 329

Cab 335
Opening the cab door 335
Closing the cab door 336
Opening the side windows 337
Closing the side windows 337
Turning the interior lighting on or off (variant) 338
Operating the rear window heating 338
Radio (variant) 339
Radio with Bluetooth interface (variant) 340
Heating system (variant) 342
Air conditioning (variant) 342
Clipboard (variant) 346
Push-up roof window (variant) 346
12 V socket 348

Trailer operation 349
Towed load 349
Coupling pin in the counterweight 350
Automatic tow coupling 352
Towing trailers 360

Display messages 362
Messages 362
Messages about operation 363
Messages about the truck 368

Refuelling 370
Changing the LPG cylinder 370
Changing the LPG cylinder in a double-cylinder holder 373
Filling the LPG tank (variant) 376

Cleaning 381
Clean the truck 381
Cleaning the electrical system 383
Cleaning load chains 383
Cleaning the windows 384
After washing 384

Procedure in emergencies 385
Procedure if truck tips over 385
Emergency hammer 385
Emergency lowering 386

Emergency operation of the electric parking brake 388
Disconnecting the battery 390
Jump-starting 391
Towing 392
Emergency driving via the drive direction switch/drive direction selection lever 394

Transporting the truck 396
Transporting 396
Crane loading 398
Short-term operation 399

Decommissioning 400
Shutting down and storing the truck 400
Using after storage or decommissioning 401

5 Maintenance

Safety regulations for maintenance 404
General information 404
Working on the hydraulic equipment 404
Working on the electrical equipment 403
Working on the ignition system 405
Working on the LPG system 406
Safety devices 407
Set values 407
Lifting and jacking up 407
Working at the front of the truck 407

General maintenance information 409
Personnel qualifications 409
Information for carrying out maintenance 409
Setting up and adjusting the due date counter for maintenance and safety checks 411
Maintenance - 1000 hours/annually 413
Maintenance - 3000 hours/every two years 417
Ordering spare parts and wearing parts 417
Quality and quantity of the required operating materials 418
Lubrication plan 419
Maintenance data table 420

Providing access to maintenance points 423
Opening the bonnet 423
Closing the bonnet 425
Removing and attaching the rear cover 427
Installing and removing the bottom plate 428

Maintenance after the first 50 operating hours 430
Maintenance during the break-in period 430

Preserving operational readiness 431
Checking the engine oil level. 431
Cleaning the dust valve 432
Filling the washer system 432
Cleaning the radiator, checking for leaks 433
Check the cooling fluid level 433
Topping up the cooling fluid and checking the coolant concentration 434
Replacing the air filter cartridges 436
Lubricating the joints and controls 438
Maintaining the seat belt 439
Checking the driver's seat 440
Checking the door latch. 441
Maintaining wheels and tyres 441
Maintaining the battery 443
Replacing fuses 446
Checking the hydraulic system for leak tightness 447
Lubricating the lift mast and roller track 448
Greasing the automatic tow coupling 448
Check the hydraulic oil level 450

1000-hour maintenance/annual maintenance 453
Other work that must be carried out 453
Checking the exhaust gas system 453
Changing the LPG filter 453
Checking the lift cylinders and connections for leaks 455
Checking the fork arms 456
Checking the reversible fork arms 456

10-year maintenance 457
Checking the LPG tank (variant) 457

6 Technical data

Dimensions 460

VDI datasheet for RX70-20/600 and RX70-25 462

VDI datasheet for RX70-25/600 and RX70-30 466

VDI datasheet for RX70-30/600 and RX70-35 470

Ergonomic dimensions 474

Fuse assignment 475

1

Foreword

Your truck

Description of the truck

General

The trucks in the RX70-20/25/30/35 series with a load capacity of up to 3.5 t are equipped with an internal combustion engine/electric drive. This drive combines the advantages of the internal combustion engine with the precise control of an electric drive. The maximum speed is 21 km/h (without load).

The bend-resistant and warp-resistant lift mast enables safe load handling, even with heavy loads. The comfortable driver's compartment features the most up-to-date ergonomic design to prevent signs of fatigue and increase safety.

The truck supports all of the functions of Fleet-Manager 4.0.

Brake system

The brake system of the truck is comprised of three different brakes:

- Service brake
- Regenerative brake
- Parking brake

The service brake is based on a wear-free, oil-immersed multi-disc brake. This multi-disc brake is used as the service brake for heavy braking or emergency braking with the brake pedal. In the normal working mode, the regenerative brake of the electric traction motor takes effect. The regenerative brake converts the acceleration energy of the truck into electrical energy. This causes the truck to decelerate as soon as the accelerator pedal is released. Completely removing your foot from the accelerator pedal causes the truck to brake until it comes to a standstill. A parking brake ensures that the truck remains securely in place when parked.

Steering

The truck is equipped with a swing axle and has kickback-free, hydraulic rear-wheel steering. Stability is guaranteed when cornering

thanks to speed limitation based on the steering angle. Simple handling of the truck is assisted by the manoeuvrable steering axle.

Hydraulic system

All lift cylinders are hydraulically actuated. The oil volume flow required for the steering and the lift mast is provided by a gear pump connected to the internal combustion engine. The directional control valve block with electrical proportional technology enables extremely sensitive movements and safe handling of the load. The hydraulic functions can be parameterised individually by the authorised service centre.

Up to three hydraulic circuits can be used to activate attachments (variant). Depending on the equipment, the lifting circuit may have a hydraulic accumulator for load-damping purposes. This will help to reduce knocks to the load in the lift line due to uneven ground, for example.

Drive concept

The internal combustion engine drives an electric three-phase generator. The generated current is routed to two maintenance-free, electrical 11.7-kW three-phase AC traction motors, which drive the truck using the two front wheels. Electronic revolution control gently provides high torque for both forwards and backwards travel.

The components for the drive unit and the lift drive are enclosed in order to prevent the ingress of dust or moisture. This means that the truck is suitable for indoor and outdoor use. In addition, all drives for traction, steering and lifting are maintenance-free.

The driving characteristics and lifting behaviour can be adapted to the application or driving habits. Five drive programmes are available for this purpose. The maximum driving speed is 21 km/h. The Blue-Q energy-saving mode reduces energy consumption by up to 10% without impairing performance.

Operating devices

The truck is characterised by its accessible operating concept. When purchasing the truck, a variety of operating devices and equipment variants are available:

- Double mini-lever
- Triple mini-lever
- Quadruple mini-lever
- Joystick 4Plus
- Fingertip
- Single pedal
- Dual pedal

Hands are always kept free for steering and for controlling the operational movements to allow efficient working. The forces that need to be applied for this purpose are reduced to a minimum thanks to the compact steering wheel.

Operational information, such as the fuel level or an indication that the Blue-Q energy-saving mode is enabled, is shown on the STILL Easy Control display-operating unit.

For drive mode, the truck features either single-pedal or dual-pedal operation. The accelerator pedal is used to accelerate and brake (electric brake) the truck. In emergency situations or when carrying heavy loads, the driver can also brake the truck using the service brake by pressing the brake pedal. In dual-pedal operation, the truck has one pedal for the "Forwards" drive direction and one pedal for the "Reverse" drive direction. The acceleration and braking behaviour can be selected individually using five different driving programmes.

General

The truck described in these operating instructions corresponds to the applicable standards and safety regulations.

If the truck is to be operated on public roads, it must conform to the existing national regulations for the country in which it is being used. The driving permit must be obtained from the appropriate office.

The truck has been fitted with state-of-the-art technology. Following these operating instructions will allow the truck to be handled safely. By complying with the specifications in these operating instructions, the functionality and the approved features of the truck will be retained.

Get to know the technology, understand it and use it safely - these operating instructions provide the necessary information and help to avoid accidents and to keep the truck ready for operation beyond the warranty period.

Therefore:

– Before commissioning the truck, read the operating instructions and follow the instructions.

– Always follow all of the safety information contained in the operating instructions and on the truck.

Conformity marking

The manufacturer uses the conformity marking to document the conformity of the industrial truck with the relevant directives at the time of placing on the market:

- CE: in the European Union (EU)
- UKCA: in the United Kingdom (UK)
- EAC: in the Eurasian Economic Union

The conformity marking is applied to the nameplate. A declaration of conformity is issued for the EU and UK markets.

An unauthorised structural change or addition to the industrial truck can compromise safety, thus invalidating the declaration of conformity.

▷

conformity symbols

Declaration that reflects the content of the declaration of conformity

Declaration

STILL GmbH
Berzeliusstraße 10
22113 Hamburg Germany

We declare that the specified machine conforms to the most recent valid version of the directives specified below:

Industrial truck type	**corresponding to these operating instructions**
Model	**corresponding to these operating instructions**

– "Machinery Directive 2006/42/EC" [1)]
– "Supply of Machinery Safety Regulations 2008, 2008 No. 1597" [2)]

Personnel authorised to compile the technical documents:

See declaration of conformity

STILL GmbH

[1)] For the markets of the European Union, the EU candidate countries, the EFTA States and Switzerland.
[2)] For the United Kingdom market.

The declaration of conformity document is supplied with the industrial truck. The declaration shown explains the conformity with the provisions of the EC Machinery Directive and the Supply of Machinery Safety Regulation 2008, 2008 No. 1597.

An unauthorised structural change or addition to the industrial truck can compromise safety, thus invalidating the declaration of conformity.

The declaration of conformity must be carefully stored and made available to the responsible authorities if necessary. It must also be handed over to the new owner if the industrial truck is sold on.

Accessories

- Key for key switch (two pieces)
- Key for cab (variant)
- Hexagon socket wrench for emergency lowering

Labelling points

Labelling points on the side

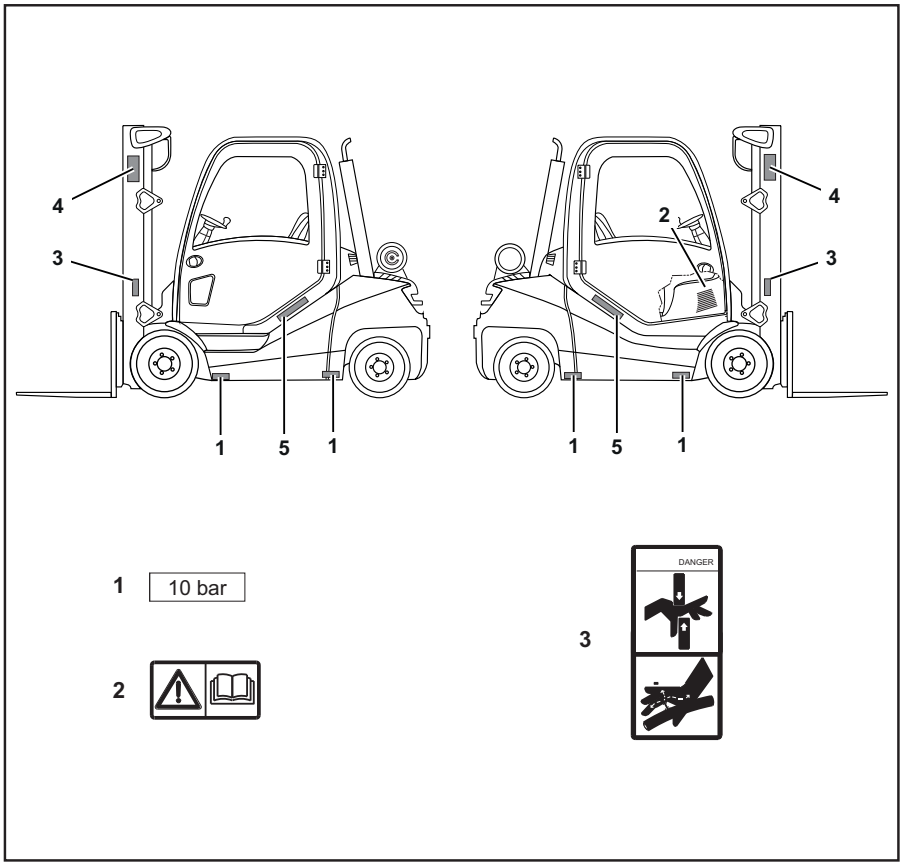

1	Decal information: Tyre pressure specification	3	Warning sign: Danger due to shearing / Danger due to high fluid pressure
2	Decal information: Caution / Read the operating instructions	4	Manufacturer's logo
		5	Decal information: HYBRID TECHNOLOGY

Labelling points at the front and rear

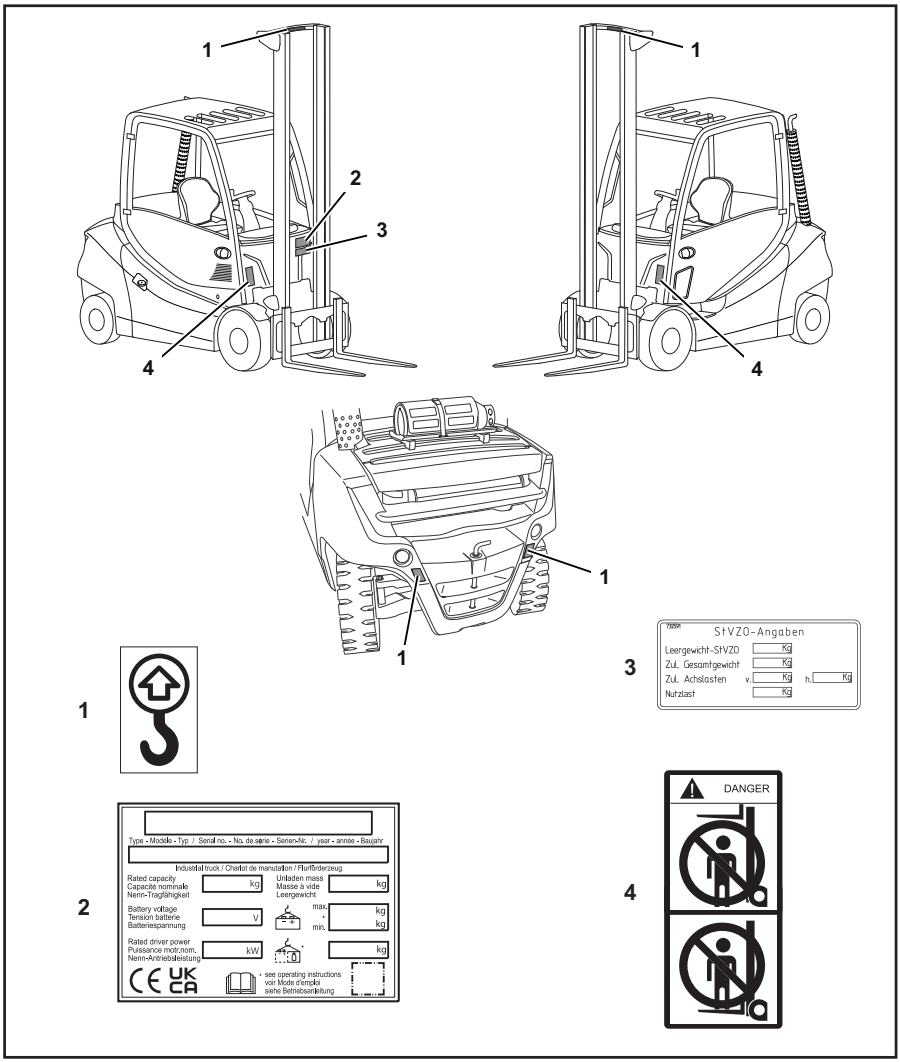

1 Decal information: Lifting point
2 Nameplate
3 Decal information: StVZO (German Road Traffic Licensing Regulations) information
4 Warning sign: Do not stand underneath the fork / Do not stand on the fork

Labelling points in the driver's compartment

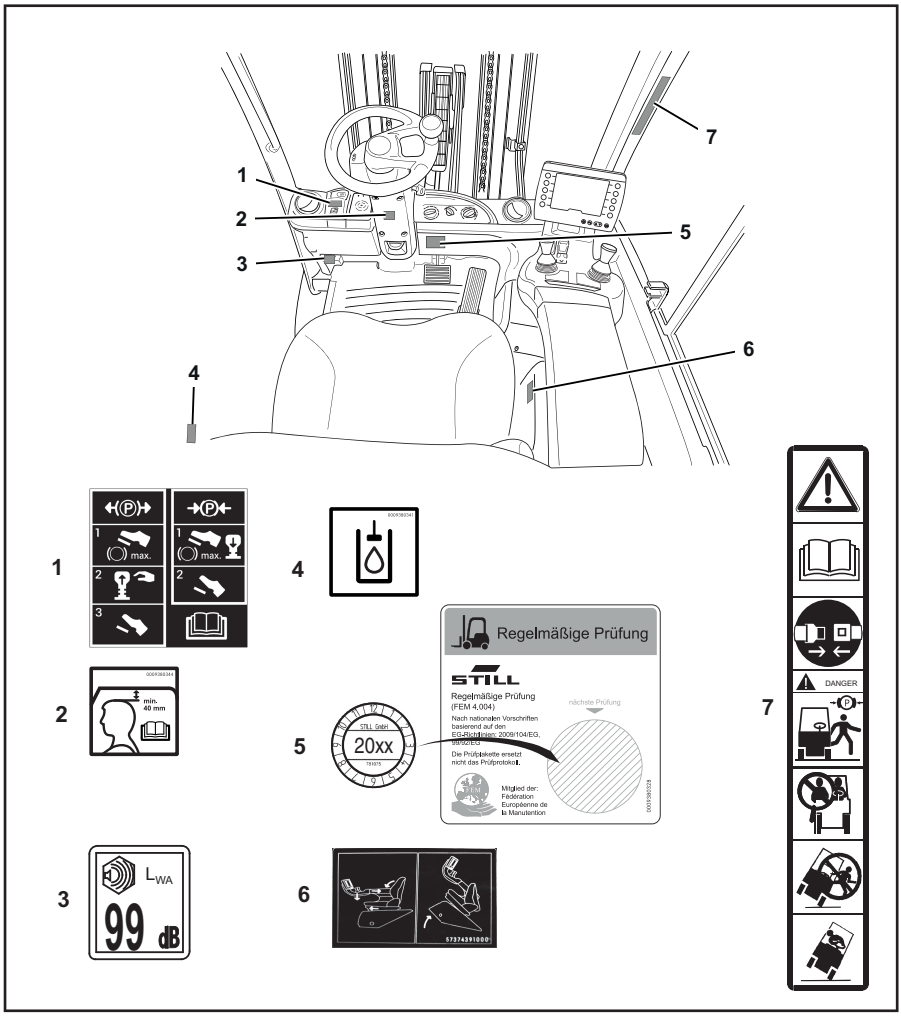

1 Decal information: Emergency release of parking brake
2 Decal information: Head-clearance label
3 Decal information: Sound power level (L_{WA})
4 Decal information: Hydraulic oil
5 Decal information: Regular testing and test sticker
6 Decal information: Armrest adjustment (opening the bonnet)
7 Warning sign: Caution / Read operating instructions / Fasten seat belt / Apply parking brake when leaving the truck / Passengers are not allowed / Do not jump off if the truck is tipping over / Lean in the opposite direction to which the truck is tipping

Labelling points on the armrest

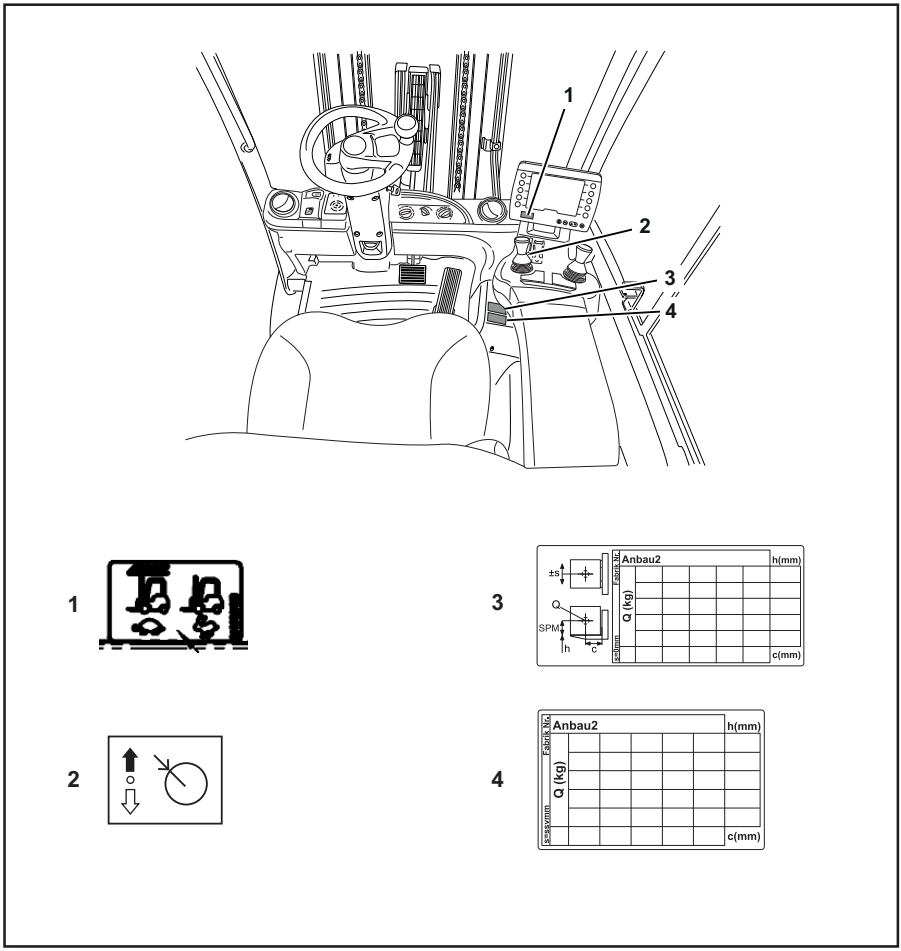

1 Decal information: Ceiling sensor (variant)
2 Decal information: Cruise control (variant)
3 Decal information: Basic load capacity
4 Decal information: Load capacity for attachment (variant)

Nameplate

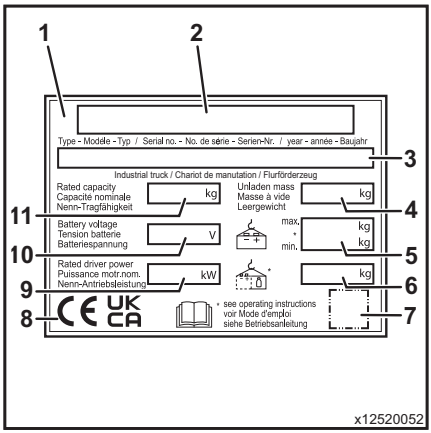

1 Nameplate
2 Manufacturer
3 Model/serial number/year of manufacture
4 Tare weight
5 Max. battery weight/min. battery weight (only for electric trucks)
6 Ballast weight (only for electric trucks)
7 Placeholder for "data matrix code"
8 Conformity marking
9 Rated drive power
10 Battery voltage (only for electric trucks)
11 Rated capacity

NOTE

It is possible for there to be multiple conformity markings on the nameplate.

- ***CE*** *for the markets of the EU, the EU candidate countries, the EFTA states and Switzerland*
- ***UKCA*** *for the United Kingdom market*
- ***EAC*** *for the Eurasian Economic Union market The EAC marking may also be located in the immediate vicinity of the nameplate.*

Serial number

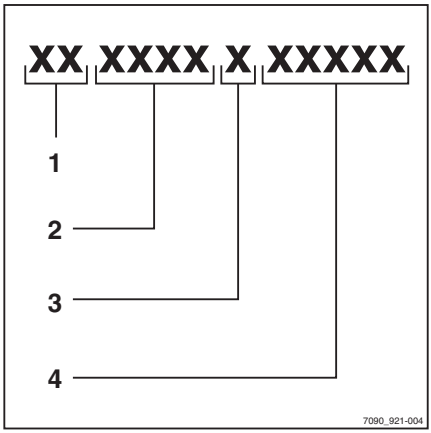

The serial number is used to identify the truck. The serial number is shown on the nameplate. Quote the serial number for all technical questions.

The serial number contains the following coded information:

1 Production location
2 Model
3 Year of manufacture
4 Sequential number

StVZO (Road Traffic Licensing Regulations) information

This label includes information on the weight and load distribution of the truck.

▷

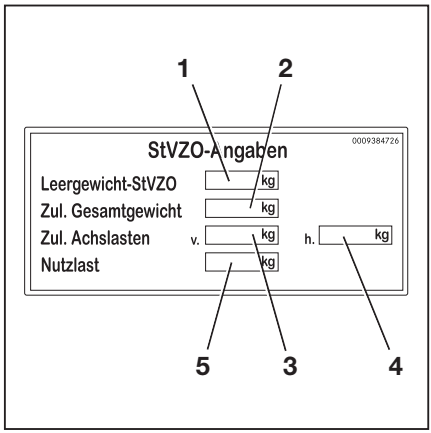

1 Tare weight (in kg)
2 Permitted total weight (in kg)
3 Permitted front axle weight (in kg)
4 Permitted rear axle weight (in kg)
5 Payload (in kg)

Using the truck

Intended use

The truck described in these operating instructions is suitable for lifting, transporting and stacking loads.

The truck may only deployed for its intended use as set out and described in these operating instructions.

If the truck is to be used for purposes other than those specified in the operating instructions, the approval of the manufacturer and, if applicable, the relevant regulatory authorities must be obtained beforehand in order to prevent hazards.

The maximum load to be lifted is specified on the capacity rating plate (load diagram) and must not be exceeded; see the section entitled "Capacity rating plate" in the chapter entitled "Handling loads".

Proper use during towing

This truck is suitable for the occasional towing of trailers and is equipped with a towing device for this purpose. This occasional towing may not exceed 2% of the daily operating time. If the truck is to be used for towing on a more regular basis, the manufacturer should be consulted.

The regulations regarding trailer operation must be observed; see chapter "Trailer operation".

Improper use

The operating company or driver, and not the manufacturer, is liable for any hazards caused by improper use.

NOTE

Please note the definition of the following responsible persons: "operating company" and "driver".

Use for purposes other than those described in these operating instructions is prohibited.

⚠ DANGER

There is a risk of fatal injury from falling off the truck while it is moving!

– It is prohibited to carry passengers on the truck.

The truck may not be operated in areas where there is a risk of explosion, in areas that cause corrosion or in areas that are particularly dusty.

Stacking or unstacking on inclined surfaces or ramps is not permitted.

Place of use

The truck can be used outside and, with the correct equipment, in buildings.

Operation on public roads is only permitted with the "StVZO" (Road Traffic Licensing Regulations) equipment variant.

If the truck is to be operated on public roads, it must conform to the existing national regulations for the country in which it is being used.

The ground must have an adequate load capacity (concrete, asphalt) and a rough surface. Routes, working areas and aisle widths must conform to the specifications in these operating instructions; see chapter entitled "Routes".

Driving on upward and downward gradients is permitted provided the specified data and specifications are observed; see chapter entitled "Routes".

The truck is suitable for use in countries ranging from the Tropics to Nordic regions (temperature range: -12 °C to +40 °C).

This truck is not designed to be operated in cold stores.

The operating company must ensure that suitable fire protection is available for the relevant application in the truck's surroundings. Depending on the application, additional fire protection must be provided on the truck. If in doubt, contact the relevant authorities.

NOTE

Please observe the definition of the following responsible person: "operating company".

DANGER

Risk of fatal poisoning!

It is dangerous to leave the engine running in enclosed spaces. The engine consumes oxygen and emits carbon dioxide, carbon monoxide and other poisonous gases. There is a risk of fatal injury!

– Only operate the truck in areas that are well ventilated.

Using working platforms

WARNING

The use of working platforms is regulated by national law. The use of working platforms is only permitted by virtue of the jurisdiction in the country of use.

– Observe national legislation.

– Before using working platforms, consult the national regulatory authorities.

Information about the documentation

Scope of the documentation

- Original operating instructions of the truck
- Original operating instructions of the display-operating unit
- Operating instructions of the installed variants that are not mentioned in the aforementioned original operating instructions
- "UPA"operating instructions or inserts (depending on the truck equipment)
- Spare parts list

NOTE

Refer to the additional information in the section entitled "Rules for the operating company of industrial trucks".

These operating instructions describe all measures necessary for the safe operation and proper maintenance of the truck in all possible variants available at the time of printing. Special versions to meet customer requirements (UPA) are documented in separate operating instructions.

– If you have any questions, contact your authorised service centre.

Enter the serial number and year of manufacture from the nameplate in the space provided:

Serial number:
Year of manufacture:

– Please quote the serial number in all technical enquiries.

Each truck comes with a set of operating instructions. These instructions must be stored carefully and must be available to the driver and operating company at all times. The storage location is specified in the chapter entitled "Driver's compartment".

If the operating instructions are lost, the operating company must obtain a replacement from the manufacturer immediately.

The operating instructions are included in the spare parts list and can be reordered as a spare part.

The personnel responsible for operating and maintaining the equipment must be familiar with these operating instructions.

The operating company must ensure that all users have received, read and understood these operating instructions.

Safely store the complete documentation and pass on to the subsequent operating company when transferring or selling the truck.

NOTE

Please note the definition of the following responsible persons: "operating company" and "driver".

Thank you for reading and complying with these operating instructions. If you have any questions or suggestions for improvements, or if you have found any errors, please contact the authorised service centre.

Supplementary documentation

This industrial truck can be fitted with a **C**ustomer **O**ption (**CO**) that deviates from the standard equipment and the variants.

This CO may consist of:

- Special sensors
- A special attachment
- A special towing device
- Customised attachments

When fitted with a CO, the industrial truck is provided with additional documentation. This may take the form of an insert or separate operating instructions.

The original operating instructions for this industrial truck are valid for the operation of standard equipment and variants without restriction. The operational and safety information in the original operating instructions continues to be valid in its entirety unless it is countermanded in this additional documentation.

The requirements for the qualification of personnel as well as the time for maintenance may vary. This is defined in the additional documentation.

– If you have any questions, contact your authorised service centre.

Issue date and topicality of the operating instructions

The issue date and the version of these operating instructions can be found on the title page.

STILL is constantly engaged in the further development of trucks. These operating instructions are subject to change, and any claims based on the information and/or illustrations contained in them cannot be asserted.

Please contact your authorised service centre for technical support relating to your truck.

Copyright and trademark rights

These instructions, including excerpts thereof, must not be reproduced, translated or made accessible to third parties, except with the express written approval of the manufacturer.

Explanation of signal terms used

DANGER

Indicates procedures that must be strictly adhered to in order to prevent the risk of fatalities.

WARNING

Indicates procedures that must be strictly adhered to in order to prevent the risk of injuries.

CAUTION

Indicates procedures that must be strictly adhered to in order to prevent material damage and/or destruction.

NOTE

For technical requirements that require special attention.

ENVIRONMENT NOTE

To prevent environmental damage.

Definition of directions

The directions "forwards" (1), "backwards" (3), "right" (2) and "left" (4) refer to the installation position of the parts as seen from the driver's compartment; the load is to the front.

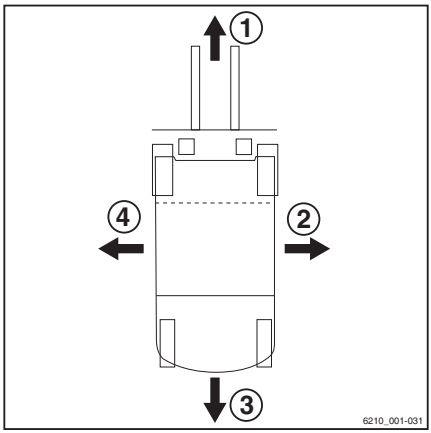

Schematic views

View of functions and operating procedures

At many points in this documentation, the (mostly sequential) operation of certain functions or operating procedures is explained. Schematic diagrams of a counterbalance truck are used to illustrate these procedures.

NOTE

These schematic views are not representative of the construction of the documented truck. The views are used solely for the purpose of clarifying procedures.

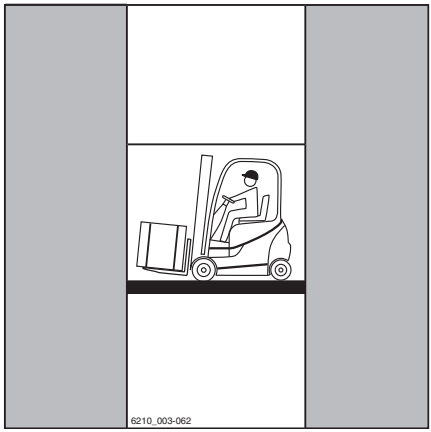

View of the display-operating unit

NOTE

Views of operating statuses and values in the display of the display and operating unit are examples and partly dependent on the truck equipment. As a result, the displays shown of the actual operating statuses and values may vary.

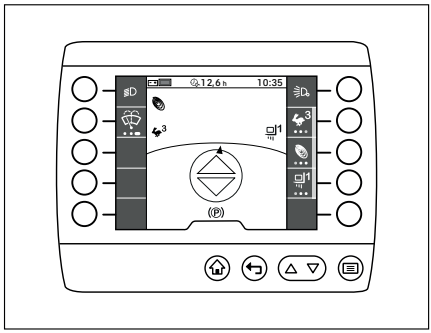

List of abbreviations

This list of abbreviations applies to all types of operating instructions. Not all of the abbreviations that are listed here will necessarily appear in these operating instructions.

Abbreviation	Meaning	Explanation
ArbSchG	Arbeitsschutzgesetz	German implementation of EU occupational health and safety directives
BetrSichV	Betriebssicherheitsverordnung	German implementation of the EU working equipment directive

Abbreviation	Meaning	Explanation
BG	Berufsgenossenschaft	German insurance company for the company and employees
BGG	Berufsgenossenschaftlicher Grundsatz	German principles and test specifications for occupational health and safety
BGR	Berufsgenossenschaftliche Regel	German rules and recommendations for occupational health and safety
DGUV	Berufsgenossenschaftliche Vorschrift	German accident prevention regulations
CE	Communauté Européenne	Confirms conformity with product-specific European directives (CE labelling)
CEE	Commission on the Rules for the Approval of the Electrical Equipment	International commission on the rules for the approval of electrical equipment
DC	Direct Current	Direct current
DFÜ	Datenfernübertragung	Remote data transfer
DIN	Deutsches Institut für Normung	German standardisation organisation
EG	European Community	
EN	European standard	
FEM	Fédération Européene de la Manutention	European Federation of Materials Handling and Storage Equipment
F_{max}	maximum Force	Maximum power
GAA	Gewerbeaufsichtsamt	German authority for monitoring/issuing regulations for worker protection, environmental protection, and consumer protection
GPRS	General Packet Radio Service	Transfer of data packets in wireless networks
ID no.	Identification number	
ISO	International Organization for Standardization	International standardisation organisation
K_{pA}	Uncertainty of measurement of sound pressure levels	
LAN	Local Area Network	Local area network
LED	Light Emitting Diode	Light emitting diode
L_p	Sound pressure level at the workplace	
L_{pAZ}	Average continuous sound pressure level in the driver's compartment	
LSP	Load centre of gravity	Distance of the centre of gravity of the load from the front face of the fork backs

Abbreviation	Meaning	Explanation
MAK	Maximum workplace concentration	Maximum permissible air concentrations of a substance at the workplace
Max.	Maximum	Highest value of an amount
Min.	Minimum	Lowest value of an amount
PIN	Personal Identification Number	Personal identification number
PPE	Personal protective equipment	
SE	Super-Elastic	Superelastic tyres (solid rubber tyres)
SIT	Snap-In Tyre	Tyres for simplified assembly, without loose rim parts
StVZO	Straßenverkehrs-Zulassungs-Ordnung	German regulations for approval of vehicles on public roads
TRGS	Technische Regel für Gefahrstoffe	Ordinance on hazardous materials applicable in the Federal Republic of Germany
UKCA	United Kingdom Conformity Assessed	Confirms conformity with the product-specific directives that apply in the United Kingdom (UKCA labelling)
VDE	Verband der Elektrotechnik Elektronik Informationstechnik e. V.	German technical/scientific association
VDI	Verein Deutscher Ingenieure	German technical/scientific association
VDMA	Verband Deutscher Maschinen- und Anlagenbau e. V.	German Mechanical Engineering Industry Association
WLAN	Wireless LAN	Wireless local area network

Environmental considerations

Packaging

During delivery of the truck, certain parts are packaged to provide protection during transport. This packaging must be removed completely prior to initial start-up.

ENVIRONMENT NOTE

The packaging material must be disposed of properly after delivery of the truck.

Disposal of components and batteries

The truck is composed of different materials. If components or batteries need to be replaced and disposed of, they must be:

- disposed of,
- treated or
- recycled in accordance with regional and national regulations.

NOTE

The documentation provided by the battery manufacturer must be observed when disposing of batteries.

ENVIRONMENT NOTE

We recommend working with a waste management company for disposal purposes.

2

Safety

Definition of responsible persons

Operating company

The operating company is the natural or legal person or group who operates the truck or on whose authority the truck is used.

The operating company must ensure that the truck is only used for its proper purpose and in compliance with the safety regulations set out in these operating instructions.

The operating company must ensure that all users read and understand the safety information.

The operating company is responsible for the scheduling and correct performance of regular safety checks.

We recommend that the national performance specifications are adhered to.

Specialist

A qualified person is defined as a service engineer or a person who fulfils the following requirements:

- A completed vocational qualification that demonstrably proves their professional expertise. This proof should consist of a vocational qualification or a similar document.
- Professional experience indicating that the qualified person has gained practical experience of industrial trucks over a proven period during their career During this time, this person has become familiar with a wide range of symptoms that require checks to be carried out, such as based on the results of a hazard assessment or a daily inspection
- Recent professional involvement in the field of the industrial truck test in question and an appropriate further qualification are essential. The qualified person must have experience of carrying out the test in question or of carrying out similar tests. Moreover, this person must be aware of the latest technological developments regarding the industrial truck to be tested and the risk being assessed

Drivers

This truck may only be driven by suitable persons who are at least 18 years of age, have been trained in driving, have demonstrated their skills in driving and handling loads to the operating company or an authorised representative, and have been specifically instructed to drive the truck. Specific knowledge of the truck to be operated is also required.

The training requirements under §3 of the Health and Safety at Work Act and §9 of the plant safety regulations are deemed to have been satisfied if the driver has been trained in accordance with BGG (General Employers' Liability Insurance Association Act) 925. Observe the national regulations for your country.

Driver rights, duties and rules of behaviour

The driver must be trained in his rights and duties.

The driver must be granted the required rights.

The driver must wear protective equipment (protection suit, safety footwear, safety helmet, industrial goggles and gloves) that is appropriate for the conditions, the job and the load to be lifted. Solid footwear should be worn to ensure safe driving and braking.

The driver must be familiar with the operating instructions and have access to them at all times.

The driver must:

- have read and understood the operating manual
- have familiarised himself with safe operation of the truck
- be physically and mentally able to drive the truck safely

⚠ DANGER

The use of drugs, alcohol or medications that affect reactions impair the ability to drive the truck!

Individuals under the influence of the aforementioned substances are not permitted to perform work of any kind on or with the truck.

Prohibition of use by unauthorised persons

The driver is responsible for the truck during working hours. He must not allow unauthorised persons to operate the truck.

When leaving the truck, the driver must secure it against unauthorised use, e.g. by pulling out the key.

Basic principles for safe operation

Insurance cover on company premises

In many cases, company premises are restricted public traffic areas.

NOTE

The business liability insurance should be reviewed to ensure that, in the event of any damage caused in restricted public traffic areas, there is insurance cover for the truck in respect of third parties.

Modifications and retrofitting

If the truck will be used for work that is not listed in the directives or in these instructions, convert or retrofit the truck for this purpose as required. Any structural modification can impair the handling and stability of the truck, and can result in accidents.

Any modifications that adversely affect the stability, the load capacity or the circumferential view of the truck require written approval from the manufacturer.

The following components may only be modified with prior written approval from the manufacturer:

- Brakes
- Steering
- Operating devices
- Safety systems
- Equipment variants
- Attachments

The truck may only be converted with written approval from the manufacturer. If necessary, obtain approval from the relevant authorities.

– Only the authorised service centre is permitted to perform welding work on the truck.

We warn against installing and using restraint systems that have not been approved by the manufacturer.

– Contact the authorised service centre before converting or retrofitting the truck.

The operating company is only permitted to make modifications to the truck independently if the manufacturer goes into liquidation and the company is not taken over by another legal person.

The operating company must also fulfil the following prerequisites:

- Design documents, test documents and assembly instructions associated with the modification must be permanently archived and remain accessible at all times.
- The capacity rating plate, the decal information, the hazard warnings and the operating instructions must be checked to ensure that they are consistent with the modifications and must be amended if required.
- Modifications must be designed, checked and implemented by a design office that specialises in industrial trucks. The design office must comply with the standards and directives valid at the time that modifications are made.

Decal information with the following data must be permanently affixed to the truck so that it is clearly visible:

- Type of modification
- Date of modification
- Name and address of the company that carried out the modification

Changes to the overhead guard and roof loads

⚠ DANGER

In the event of the overhead guard failing due to a falling load or the truck tipping over, there are potentially fatal consequences for the driver. There is a risk to life!

Welding and drilling on the overhead guard changes the material characteristics and the structural design of the overhead guard. Excessive forces caused by falling loads or the truck tipping over may result in buckling of the modified overhead guard and no protection for the driver.

– Do not perform welding on the overhead guard.

– Do not perform drilling on the overhead guard.

⚠ CAUTION

Heavy roof loads damage the overhead guard!

To ensure the stability of the overhead guard at all times, a roof load may only be mounted on the overhead guard if the structural design has been tested and the manufacturer has given approval.

– Seek advice from the authorised service centre for the mounting of roof loads.

Warning about any manipulation of the internal combustion engine

The internal combustion engine used in this truck possesses an EU type approval, which is required for the legitimate operation of this truck.

Manipulation of the internal combustion engine in any way invalidates this EU type approval. In this case, operation of the truck is also no longer permitted.

Warning regarding non-original parts

Original parts, attachments and accessories are specially designed for this truck. We specifically draw your attention to the fact that parts, attachments and accessories supplied by other companies have not been tested and approved by STILL.

⚠ CAUTION

Installation and/or use of such products may therefore have a negative impact on the design features of the truck and thus impair active and/or passive driving safety.

We recommend that you obtain approval from the manufacturer and, if necessary, from the relevant regulatory authorities before installing such parts. The manufacturer accepts no liability for any damage caused by the use of non-original parts and accessories without approval.

Damage, defects and misuse of safety systems

Damage or other defects on the truck or attachment must be reported to the supervisor or responsible fleet manager immediately so that they can have the defect rectified.

Trucks and attachments that are not functional or safe to drive may not be used until they have been properly repaired.

Do not remove or deactivate safety systems and switches.

Fixed set values may only be changed with the approval of the manufacturer.

Work on the electrical system (e.g. connecting a radio, additional headlights etc.) is only permitted with the manufacturer's written approval. All electrical system interventions must be documented.

Even if they are removable, roof panels may not be removed, as they are designed to protect against small falling objects.

Tyres

⚠ DANGER

Risk to stability!

Failure to observe the following information and instructions can lead to a loss of stability. The truck may tip over, risk of accident!

The following factors can lead to a loss of stability and are therefore **prohibited**:

- Different tyres on the same axle, e.g. pneumatic tyres and superelastic tyres
- Tyres not approved by the manufacturer
- Excessive tyre wear
- Tyres of inferior quality
- Changing rim wheel parts
- Combining rim wheel parts from different manufacturers

The following rules must be observed to ensure stability:

- Only use tyres with equal and permitted levels of wear on the same axle
- Only use wheels and tyres of the same type on the same axle, e.g. only superelastic tyres
- Only use wheels and tyres approved by the manufacturer
- Only use high-quality products

Wheels and tyres approved by the manufacturer can be found on the spare parts list.
If other wheels or tyres are to be used, authorisation from the manufacturer must be obtained beforehand.

– Contact the authorised service centre on this matter.

When changing wheels or tyres, always ensure that this does not cause the truck to tilt to one side (e.g. always replace right-hand and left-hand wheels at the same time). Changes must only be made following consultation with the manufacturer.

If the type of tyre used on an axle is changed, for example from superelastic tyres to pneumatic tyres, the load diagram must be changed accordingly.

– Contact the authorised service centre on this matter.

Medical equipment

⚠ WARNING

Electromagnetic interference may occur on medical devices!

Only use equipment that is sufficiently protected against electromagnetic interference.

Medical equipment, such as pacemakers or hearing aids, may not work properly when the truck is in operation.

– Ask your doctor or the manufacturer of the medical equipment to confirm that the medical equipment is sufficiently protected against electromagnetic interference.

Exercise caution when handling gas springs and accumulators

⚠ WARNING

Gas springs are under high pressure. Improper removal results in an elevated risk of injury.

For ease of operation, various functions on the truck can be supported by gas springs. Gas springs are complex components that are subject to high internal pressures (up to 300 bar). They may under no circumstances be opened unless instructed to do so, and may be installed only when not under pressure. If required, the authorised service centre will depressurise the gas spring in accordance with the regulations before removal. Gas springs must be depressurised before recycling.

– Avoid damage, lateral forces, buckling, temperatures over 80°C and heavy contamination.
– Damaged or defective gas springs must be changed immediately.
– Contact the authorised service centre.

⚠ WARNING

Accumulators are under high pressure. Improper installation of an accumulator results in an elevated risk of injury.

Before starting work on the accumulator it must be depressurised.

– Contact the authorised service centre.

Length of the fork arms

⚠ DANGER

Risk of accident due to the incorrect selection of fork arms!

– The fork arms must match the depth of the load.

If the fork arms are too short, the load may fall off the arms after it has been picked up. In addition, be aware that the load centre of gravity may shift as a result of dynamic forces, such as braking. A load that is otherwise resting safely on the fork arms may move forwards and fall.

If the fork arms are too long, they can catch on loading units behind the load that is to be picked up. These other loading units then fall over when the load is raised.

– For help with selecting the correct fork arms, contact the authorised service centre.

Residual risk

Residual dangers, residual risks

Despite working with care and complying with the standards and regulations, the possibility of other dangers arising when using the truck cannot be ruled out.

The truck and all other system components comply with current safety requirements. Even when the industrial truck is used in accordance with its intended use and all instructions provided are followed, some residual risk cannot be excluded.

A residual risk cannot be excluded even beyond the narrow limits of the danger area that the truck itself represents. In order to be able to react immediately in the event of a malfunction, an incident, a breakdown etc., persons in the danger area must pay increased attention to the truck.

⚠ WARNING

All persons in the danger area of the truck must be aware of the dangers posed by the truck.

In addition, your attention is drawn to the safety regulations given in these operating instructions.

Risks can include:

- Escape of consumables due to leakages, rupture of lines and containers etc.
- Risk of accident when driving over difficult ground such as gradients, very smooth or uneven surfaces, or with poor visibility etc.
- Falling, tripping etc. on the truck, especially in wet weather, with leaking consumables or on icy surfaces
- Risk of fire and explosion from the batteries and electrical voltages
- Human error resulting from failure to observe the safety regulations
- Unrepaired damage or faulty and worn components
- Insufficient maintenance and testing
- Use of incorrect consumables
- Exceeding test intervals

If the operating company negligently or intentionally fails to comply with these require-

ments, this can lead to an accident. In this case, the manufacturer is exempt from liability.

Stability

The stability of the truck has been tested to the latest technological standards. If the truck is used in the proper manner and in accordance with its intended use, the stability of the truck is guaranteed. These standards only take into account the dynamic and static tipping forces that can arise when used in accordance with the specified operating rules and intended use. The danger of exceeding the moment of tilt and losing stability due to improper or incorrect operation can never be ruled out.

The loss of stability can be avoided or minimised by complying with following principles:

- Always secure the load against slipping, e.g. by lashing.
- Always transport unstable loads in suitable containers.
- Always drive slowly when cornering.
- Drive with the load lowered.
- On trucks fitted with a sideshift, align and transport loads such that the load centre of gravity is positioned centrally to the truck.
- Avoid turning and diagonally driving across slopes or gradients.
- Never have the load facing downhill when travelling on slopes or gradients.
- Always take great care when transporting suspended loads.
- Do not drive over ramp edges or steps.

Special risks associated with using the truck and attachments

Approval from the manufacturer and attachment manufacturer must be obtained each time the truck is used in a manner that falls outside the scope of normal use, and in cases where the driver is not certain that he can

use the truck correctly and without the risk of accidents.

Overview of hazards and countermeasures

NOTE

This table is intended to help evaluate the hazards in your facility and applies to all drive types. It does not claim to be complete.

– Observe the national regulations for the country in which the truck is being used.

Hazard	Course of action	Check note √ done - Not applicable	Notes
Truck equipment does not comply with local regulations	Testing	O	If in doubt, consult the responsible factory inspectorate or employers' liability insurance association
Driver's lack of skills or qualifications	Driver training (sit-on and stand-on)	O	DGUV principle 308-001 VDI 3313 driver's licence
Usage by unauthorised persons	Access with key only for authorised persons	O	
Truck not safe for operation	Periodic inspection and rectification of defects	O	German Ordinance on Industrial Safety and Health (BetrSichV)
Risk of falling when using working platforms	Compliance with national regulations (different national laws)	O	German Ordinance on Industrial Safety and Health (BetrSichV) and employer's liability insurance associations
Impaired visibility due to load	Application planning	O	German Ordinance on Industrial Safety and Health (BetrSichV)
Contamination of breathable air	Assessment of diesel exhaust gases	O	Technical Regulations for Hazardous Substances (TRGS) 554 and the German Ordinance on Industrial Safety and Health (BetrSichV)
	Assessment of LPG exhaust gases	O	German threshold limit values list (MAK-Liste) and the German Ordinance on Industrial Safety and Health (BetrSichV)

Hazard	Course of action	Check note √ done - Not applicable	Notes
Impermissible usage (improper usage)	Provide operating instructions	O	German Ordinance on Industrial Safety and Health (BetrSichV) and German Health and labour protection law (ArbSchG)
	Written notice of instruction to driver	O	German Ordinance on Industrial Safety and Health (BetrSichV) and German Health and labour protection law (ArbSchG)
	German Ordinance on Industrial Safety and Health (BetrSichV), observe the operating instructions	O	
When fuelling			
a) Diesel	German Ordinance on Industrial Safety and Health (BetrSichV), observe the operating instructions	O	
b) LPG	DGUV regulation 79, observe the operating instructions	O	
When charging the drive battery	German Ordinance on Industrial Safety and Health (BetrSichV), observe the operating instructions	O	VDE 0510-47 (= DIN EN 62485-3): In particular - Ensure adequate ventilation - Insulation value within the permissible range
When using battery chargers	German Ordinance on Industrial Safety and Health (BetrSichV), DGUV rule 113-001 and observe the operating instructions	O	German Ordinance on Industrial Safety and Health (BetrSichV) and DGUV rule 113-001
When parking LPG trucks	German Ordinance on Industrial Safety and Health (BetrSichV),	O	German Ordinance on Industrial Safety and Health (BetrSichV) and DGUV rule 113-001

Hazard	Course of action	Check note √ done - Not applicable	Notes
	DGUV rule 113-001 and observe the operating instructions		
When operating driverless transport systems			
Roadway quality inadequate	Clean/clear roadways	O	German Ordinance on Industrial Safety and Health (BetrSichV)
Loading equipment incorrect/slipped	Reposition load on pallet	O	German Ordinance on Industrial Safety and Health (BetrSichV)
Unpredictable driving behaviour	Employee training	O	German Ordinance on Industrial Safety and Health (BetrSichV)
Routes blocked	Mark routes Keep roadways clear	O	German Ordinance on Industrial Safety and Health (BetrSichV)
Routes intersect	Announce right-of-way rule	O	German Ordinance on Industrial Safety and Health (BetrSichV)
No person detection when placing goods into stock and removing goods from stock	Employee training	O	German Ordinance on Industrial Safety and Health (BetrSichV)

Danger to employees

According to the German Ordinance on Industrial Safety and Health (BetrSichV) and labour protection law (ArbSchG), the operating company must determine and assess hazards during operation, and establish the labour protection measures required for employees (BetrSichVO). The operating company must therefore draw up appropriate operating instructions (§ 6 ArbSchG) and nominate a person who is responsible for these operating instructions. Drivers must be informed of the operating instructions that apply to them.

NOTE

Please note the definition of the following responsible persons: "operating company" and "driver".

The design and equipment of the truck comply with the standards and directives required for CE conformity. The design and equipment also comply with the standards and directives necessary for the UKCA compliance that is required in the United Kingdom. The design and equipment are therefore not part of the required scope of the hazard assessment. The same applies to attachments with their own CE labelling and UKCA labelling. The operating company must, however, select the type and equipment of the trucks so as to comply with the local provisions for deployment.

The result of the hazard assessment must be documented (§ 6 ArbSchG). In the case of truck applications involving similar hazard situations, the results may be summarised. Refer to the chapter entitled "Overview of hazards and countermeasures", which provides advice on complying with this regulation. The overview specifies the primary hazards that, in the event of non-compliance, are the most frequent causes of accidents. If other major hazards are present as a result of the specific operating conditions, these hazards must also be taken into consideration.

The conditions of use for trucks are broadly similar in many plants, so the hazards can be summarised in one overview. Observe the information provided by the relevant employers' liability insurance association on this subject.

Safety tests

Carrying out regular inspections on the truck

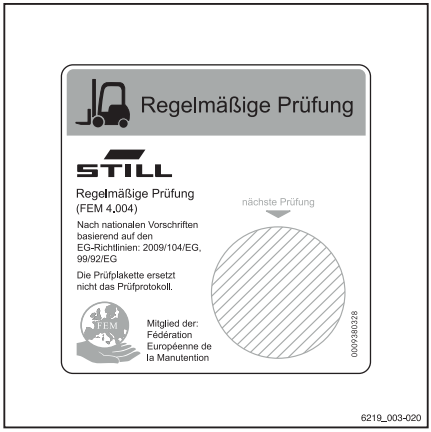

The operating company must ensure that the truck is checked by a specialist at least once a year or after particular incidents.

As part of this inspection, the technical condition of the truck must be completely tested with regard to accident safety. In addition, the truck must be thoroughly checked for damage that may have been caused by improper use. A test log must be created. The results of the inspection must be retained at least until a further two inspections have been carried out.

The inspection date is indicated by an adhesive label on the truck.

– Arrange for the authorised service centre to perform regular testing on the truck.
– Observe the guidelines for tests carried out on the truck in accordance with FEM 4.004.

The operating company is responsible for ensuring that any defects are remedied without delay.

– Notify your authorised service centre.

NOTE

In addition, observe the national regulations for the country of use.

Carrying out regular safety inspections on the LPG system

Technical safety inspection of the LPG system

The operating company must commission a competent person to check the LPG system. Observe the national regulations in the relevant country! In Germany, check the system in accordance with section 37 of the employers' liability association regulations BGV D34 entitled "Accident prevention regulation for the use of LPG".

NOTE

Please observe the definition of the following responsible persons: "operating company" and "competent person".

The LPG system must be checked:

- Recurring in regular intervals, but at least once per year
- After repair work that may affect operational safety
- After changes that may affect operational safety
- After breaks in operation of more than one year.

The following will be checked: proper condition, the possibility of leakages, function, installation and the functionality of the safety devices.

The results from the inspection must be recorded in an inspection document in accordance with BGG 936 (observe the applicable national regulations). The results must be retained until the next inspection. The inspection documents must be available for viewing by the authorities at any time.

The type and scope of tests may differ according to the country. Any differing legal provisions in the respective country of operation must be observed when using trucks with an LPG system.

The operating company is responsible for ensuring that any defects are remedied without delay. In the event of defects, notify the authorised service centre.

Checking the gas tank

Gas tanks are subject to Pressure Equipment Directive 2014/68/EU.

The operating company is responsible for having the gas tanks checked at regular intervals. Observe the applicable national regulations; in Germany, the Deutsche Gesetzliche Unfallversicherung (DGUV — German Social Accident Insurance body) regulations for LPG and industrial trucks apply.

A competent person must carry out the check.

Regularly checking the level of harmful substances in the exhaust gas

The operating company must ensure that the level of harmful substances in the exhaust gas is checked recurrently by a competent person at regular intervals, at least every six months. Observe the national regulations in the relevant country! In Germany, perform checks in accordance with § 37 of the employers' liability insurance association regulations BGV D34 entitled "Accident prevention regulation for the use of LPG".

The type and scope of tests may differ according to the country. Any differing legal provisions in the respective country of operation must be observed when using trucks with an LPG system.

NOTE

Please observe the definition of the following responsible persons: "operating company" and "competent person".

Insulation testing

The truck insulation must have sufficient insulation resistance. For this reason, insulation testing in accordance with DIN EN 1175 and DIN 43539, VDE 0117 and VDE 0510 must be conducted at least once every year.

NOTE

Contact your service centre to arrange for an insulation test.

Measuring the insulation resistance of the electrical system

NOTE

Nominal battery voltage < test voltage < 500 V.

– Ensure that all voltage sources have been disconnected from the circuit to be tested.

– Measure the insulation resistance with a suitable measuring device.

The insulation resistance can be considered sufficient if it measures at least 1000 Ω/V for nominal battery voltage against ground.

– Contact the authorised service centre.

Safety regulations for handling consumables

Permissible consumables

⚠ WARNING

Consumables can be dangerous!

– Observe the safety regulations for handling these materials; refer to the section entitled "Safety regulations for handling consumables".

– Note the safety datasheets provided by the manufacturer of the consumables in question.

– The consumables permitted for truck operation can be found in the maintenance data table.

LPG

Approved for the VW engine:

- LPG with a propane concentration of max. 95%
- LPG with a butane concentration of max. 80% and a propane concentration of at least 20%

The LPG quality must comply with the requirements of **DIN 51622** as a minimum. In the best case scenario, the LPG complies with the requirements of **EN 589** (automotive gas).

Condition of the LPG cylinders

⚠ DANGER

Risk of explosion!

LPG cylinders must not protrude beyond the edges of the truck body, because collisions with objects or other trucks could cause them to be torn off.

– Only use LPG cylinders that have been approved for operation of the LPG system.

Oils

⚠ DANGER

Oils are flammable!

– Follow the statutory regulations.

– Do not allow oils to come into contact with hot engine parts.

– No smoking, fires or naked flames!

⚠ DANGER

Oils are toxic!

- Avoid contact and consumption.
- If vapour or fumes are inhaled, move to fresh air immediately.
- In the event of contact with the eyes, rinse thoroughly (for at least 10 minutes) with water and then consult an eye specialist.
- If swallowed, do not induce vomiting. Seek immediate medical attention.

⚠ WARNING

Prolonged intensive contact with the skin can result in dryness and irritate the skin!

- Avoid contact and consumption.
- Wear protective gloves.
- After any contact, wash the skin with soap and water, and then apply a skin care product.
- Immediately change soaked clothing and shoes.

⚠ WARNING

There is a risk of slipping on spilled oil, particularly when combined with water!

- Spilt oil should be removed immediately with oil-binding agents and disposed of according to the regulations.

ENVIRONMENT NOTE

Oil is a water-polluting substance!

- *Always store oil in containers that comply with the applicable regulations.*
- *Avoid spilling oils.*
- *Spilt oil should be removed immediately with oil-binding agents and disposed of according to the regulations.*
- *Dispose of old oils according to the regulations.*

Hydraulic fluid

WARNING

These fluids are pressurised during operation of the truck and are hazardous to your health.

– Do not spill the fluids.
– Follow the statutory regulations.
– Do not allow the fluids to come into contact with hot engine parts.

WARNING

These fluids are pressurised during operation of the truck and are hazardous to your health.

– Do not allow the fluids to come into contact with the skin.
– Avoid inhaling spray.
– Penetration of pressurised fluids into the skin is particularly dangerous if these fluids escape at high pressure due to leaks in the hydraulic system. In case of such injury, immediate medical assistance is required.
– To avoid injury, use appropriate personal protective equipment (e.g. protective gloves, industrial goggles, skin protection and skin care products).

ENVIRONMENT NOTE

Hydraulic fluid is a water-polluting substance.

- *Always store hydraulic fluid in containers that comply with regulations*
- *Avoid spills*
- *Spilt hydraulic fluid should be removed immediately with oil-binding agents and disposed of according to the regulations*
- *Dispose of old hydraulic fluid according to the regulations*

Battery acid

⚠ WARNING

Battery acid contains dissolved sulphuric acid. This is toxic.

- Avoid touching or swallowing the battery acid at all costs.
- In case of injury, seek medical advice immediately.

⚠ WARNING

Battery acid contains dissolved sulphuric acid. This is corrosive.

- When working with battery acid, use appropriate PSA (rubber gloves, apron, protection goggles).
- When working with battery acid, never wear a watch or jewellery.
- Do not allow any acid to get onto clothing or skin or into the eyes. If this does happen, rinse immediately with plenty of clean water.
- In case of injury, seek medical advice immediately.
- Immediately rinse away spilt battery acid with plenty of water.
- Follow the statutory regulations.

ENVIRONMENT NOTE

- Dispose of used battery acid in line with the applicable regulations.

LPG

Always observe the Accident prevention regulation for the "use of LPG" (BGV D34) published by the main trade association of employers' liability insurance associations, or national guidelines.

LPG includes the flammable gases propane, butane and mixtures of these substances.

LPG is stored in LPG cylinders or LPG tanks and is kept there ready to drive internal combustion engines.

The pressure of these gases in the container depends on the outside temperature. It can be up to 25 bar or more.

NOTE

*In these operating instructions, liquid gases are called **LPG**.*

DANGER

Risk of explosion! LPG becomes gaseous as soon as it escapes, meaning that a hazardous, potentially explosive atmosphere is created immediately.

- Use only tools with an antistatic finish that do not produce sparks.
- Antistatic clothing and footwear are recommended.

DANGER

Risk of fire!

No open flames (stoves, storm lanterns, activities producing sparks etc.) and no smoking in storage rooms or when working on the LPG system!

- In the event of fires involving LPG, only carbon dioxide dry-powder fire extinguishers or carbon dioxide gas extinguishers may be used.

DANGER

Risk of poisoning!

Please ensure that trucks with LPG systems are only operated in entirely or partially closed rooms if no dangerous concentrations of exhaust components hazardous to health can accumulate in the air.

DANGER

There is a risk of explosion if gas leaks out in an uncontrolled manner!

- In the event of any malfunctions or starting problems, decommission the truck immediately.
- Notify the authorised service centre.

⚠ CAUTION

LPG is heavier than air and collects at floor level, in inspection pits and in other depressions in the ground, where it can produce a potentially explosive gas mixture.

- Trucks with LPG systems must only be parked in sufficiently well-ventilated areas above ground level. They must not be parked near entrances to rooms below ground level.
- Sufficient space must be maintained around parked trucks; such areas must not include cellar openings or access points, pits or similar cavities, drains without liquid traps, ventilation shafts and light wells or combustible material.

Safety information on the LPG system ▷

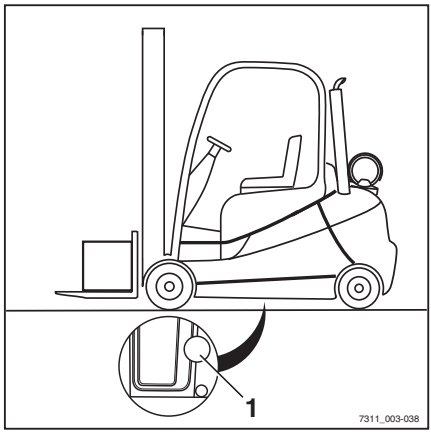

⚠ DANGER

Risk of fire or explosion in the event of heat radiation!

Do not leave trucks in halls or garages in the immediate vicinity of heating devices or equipment radiating heat.

⚠ WARNING

Risk of explosion!

When operating a truck with an LPG system, make sure that the floor opening (1) below the engine compartment is not closed. It must be ensured that there are sufficiently large ventilation openings (at least 200 cm^2) in the engine compartment floor to prevent gas from accumulating.

- The LPG system must be checked for damage and leaks at least once a year by a competent person in LPG systems; see the chapter entitled "Carrying out regular safety inspections on the LPG system".
- A competent person in LPG systems should be hired to carry out the checks if you are unsure of the type and condition of the evaporator pressure regulator, or if the LPG system has not been checked for a long time.
- Handle the LPG cylinder and the gas tank with care to avoid damage.

- The LPG cylinder, gas tank and the attached components must not exhibit any signs of damage. Do not continue to use defective components.
- Check the gas system regularly in accordance with European laws and national regulations.
- When the truck is not being used, close the shut-off valve on the LPG cylinder or on the gas tank.
- Do not manipulate the gas system in any way.
- In the event of any malfunctions or starting problems, the gas system must be checked by a competent person in LPG systems.
- Storage spaces and maintenance workshops must be well ventilated.
- Observe national regulations; in Germany, the Deutsche Gesetzliche Unfallversicherung (DGUV — German Social Accident Insurance body) regulations for LPG and industrial trucks apply.

Procedure in the event of fire

- Stay away from the outlet of the safety valve. Triggering the safety valve can intensify the flames.
- Keep people away from the danger zone.
- Call the fire brigade.
- Cool the gas tank with a water jet.

Storing pressurised-gas containers

The cylinder and main shut-off valves must be closed as soon as the truck is parked.

The special regulations governing the storage of pressurised-gas containers must be observed without fail, in addition to country-specific regulations where applicable.

Pressurised-gas containers must be stored as follows:

- Away from sources of ignition and heat
- Protected from sunlight
- Locked away and not accessible to children

- Not in rooms below ground level
- Not in stairwells, hallways/landings, confined yards and passageways/thoroughfares or in their immediate vicinity
- Not on steps of outdoor installations
- Not in specially marked escape routes
- Not in garages
- Not in work rooms

NOTE

Please also observe the section entitled "General requirements on compressed gas tanks; operation of compressed gas tanks" in the technical regulations for compressed gas tanks (TRG 380 and 404), in addition to the relevant national guidelines.

Electric hand lamps used in these rooms must be equipped with an enclosed, sealed cover and a strong protective cage.

Storage rooms and maintenance workshops must be well ventilated. Always note that LPG is heavier than air and collects at floor level, in inspection pits and in other depressions in the ground, where it can produce a potentially explosive gas and air mixture.

Coolant and cooling fluid

WARNING

Coolant and cooling fluid can be hazardous to your health and the environment!

Coolants are chemical corrosion inhibitors and cooling system protecting agents such as Glysantin. The cooling fluid is an appropriate mixture of water and coolant. Coolant in both concentrated and dilute form can be hazardous to your health if swallowed, or hazardous to the environment if spilled.

- Store coolant and cooling fluid only in their original containers and do not spill them.
- Never store coolant or cooling fluid in empty food containers, bottles or other containers.
- Observe the national regulations for the country of use.

ENVIRONMENT NOTE

- Soak up any spilt coolant or cooling fluid immediately using an oil binding agent and dispose of it in accordance with the national regulations for the country of use.
- Dispose of old coolant or cooling fluid in accordance with the national regulations for the country of use.

Disposal of consumables

ENVIRONMENT NOTE

Materials that accumulate during repair, maintenance and cleaning must be collected properly and disposed of in accordance with the national regulations for the country in which the truck is being used. Work must only be carried out in areas designated for that purpose. Care must be taken to minimise any environmental pollution.

- Soak up any spilt fluids such as hydraulic oil or gearbox oil immediately using an oil-binding agent.
- Neutralise any spilt battery acid immediately.
- Always observe national regulations concerning the disposal of used oil.

Emissions

The values specified apply to a standard truck (compare the specifications in the "Technical data" chapter). Different tyres, lift masts, additional units etc. may produce different values.

Noise emissions

The values were determined based on measuring procedures from the standard EN 12053 "Safety of industrial trucks - Test methods for measuring noise emissions", based on EN 12001, EN ISO 3744 and the requirements of EN ISO 4871.

This machine emits the following sound pressure level:

Continuous sound pressure level in the driver's compartment

L_{pAZ}	Measurement uncertainty K_{pA}
< 77 dB(A)	4 dB(A)

This machine has a guaranteed sound power level as listed below:

Guaranteed sound power level

Truck model	L_{WAZ}
RX 70-20/600 T	99 dB
RX 70-25 T	99 dB
RX 70-25/600 T	99 dB
RX 70-30 T	99 dB
RX 70-30/600 T	99 dB
RX 70-35 T	99 dB

NOTE

Lower or higher noise levels may occur when using the truck, for instance, due to the method of operation, environmental factors and other sources of noise.

The values were determined in the test cycle on an identical machine from the weighted values for operating statuses and idling.

Time proportions:

- Lifting 18%
- Idling 58%
- Driving 24%

However, the indicated noise levels at the truck cannot be used to determine the noise emissions at workplaces according to the most recent version of **Directive 2003/10/EC** (daily personal noise pollution). Observe the applicable national regulations in non-EU countries. If necessary, these noise emissions must be determined by the operating company directly at the workplaces under the actual conditions there (additional noise sources, special application conditions, sound reflections).

NOTE

Please observe the definition of the following responsible person: "operating company".

Vibrations

The vibrations of the machine have been determined on an identical machine in accordance with the standards DIN EN 13059 "Safety of industrial trucks - Test methods for measuring vibration" and DIN EN 12096 "Mechanical vibration - Declaration and verification of vibration emission values".

Frequency-weighted effective value of acceleration on the seat

MSG 65 driver's seat	Uncertainty of measurement
< 0.58 m/s^2	0.174 m/s^2

Tests have indicated that the amplitude of the hand and arm vibrations on the steering wheel or on the operating devices in the truck is less than 2.5 m/s^2. There are therefore no measurement guidelines for these measurements.

The personal vibration load on the driver over a working day must be determined by the operating company at the actual place of use in accordance with **Directive 2002/44/EC**, in order to consider all additional influences, such as driving route, intensity of use etc. Observe

the applicable national regulations in non-EU countries.

NOTE

Please note the definition of the following responsible person: "operating company".

Exhaust gases

DANGER

Risk to health from exhaust gases!

Exhaust gases from internal combustion engines are harmful to your health. In particular, the soot particles contained in the diesel exhaust gas can cause cancer. When the internal combustion engine is running, there is a risk of poisoning from the CO, CH and NOx components contained in the exhaust gas.

Modern exhaust gas treatment systems (e.g. catalytic converters, particle filters or comparable systems) can clean exhaust gases in a way that reduces the health hazard and risk of poisoning when operating the truck.

- Always observe the national laws and regulations of the country of use when using trucks with an internal combustion engine in entirely or partially enclosed working areas.
- Always ensure that there is sufficient ventilation available.

Heat

DANGER

Risk of burns due to hot exhaust gases!

Exhaust gases or components that carry exhaust gases (e.g. exhaust pipes) can become so hot that direct body contact can cause burns to the skin and materials that are too close can be burnt or singed.

- Do not grasp or touch hot exhaust pipes.
- Keep combustible materials away from the exhaust pipe.
- In the event of burns, seek first aid immediately.
- If materials are burning, take appropriate fire protection measures immediately.

Radiation

In accordance with the guidelines DIN EN 62471:2009-03 (VDE 0837-471:2009-03), the STILL SafetyLight (variant) is assigned to risk group 2 (medium risk) due to its photobiological hazard potential.

3

Overviews

Overview

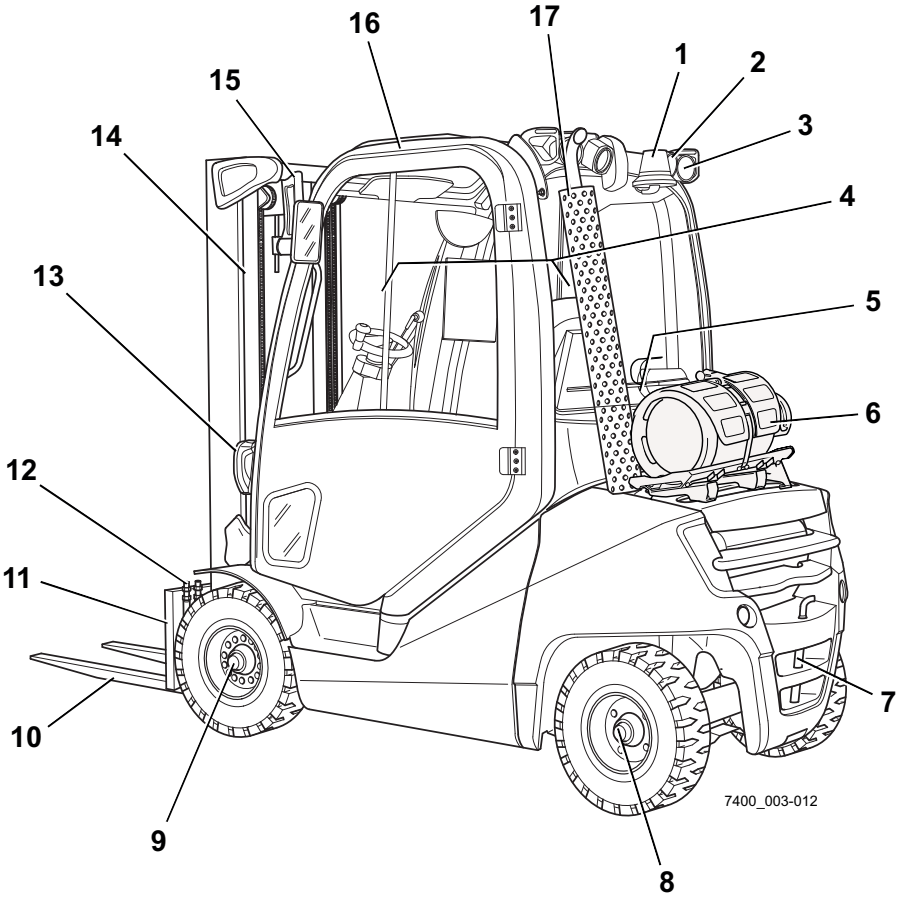

1	Rotating beacon (variant)	10	Fork arms
2	Rear working spotlight (variant)	11	Fork carriage
3	Rear lighting (variant)	12	Hydraulic connection for an attachment
4	Driver's compartment	13	Front lighting (variant)
5	Starter battery	14	Lift mast
6	LPG cylinder/LPG tank (variant)	15	Front working spotlight (variant)
7	Towing device	16	Overhead guard
8	Steering axle	17	Exhaust pipe
9	Drive axle		

Driver's compartment

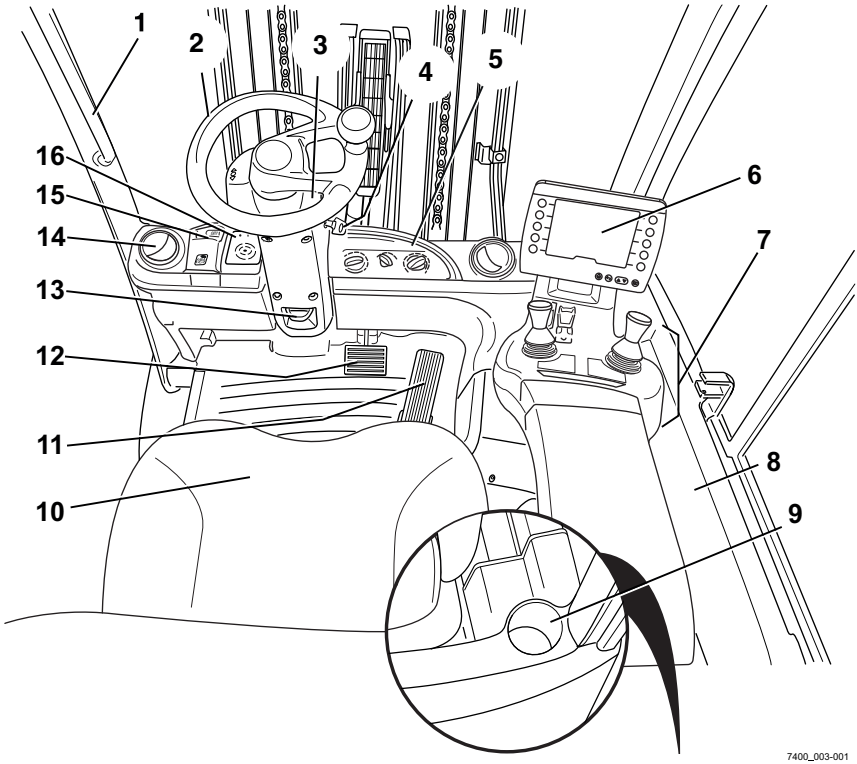

1	Handle	9	Cup holder
2	Steering wheel	10	Driver's seat
3	Mini-console	11	Accelerator pedal
4	Key switch	12	Brake pedal
5	Operating devices of the heating system	13	Steering column adjustment lever
6	Display-operating unit "STILL Easy Control"	14	Air vents
7	Operating devices	15	Parking brake
8	Compartment and storage location for operating instructions	16	FleetManager (variant)

NOTE

The truck equipment may differ from the equipment shown.

Shelves and cup holders

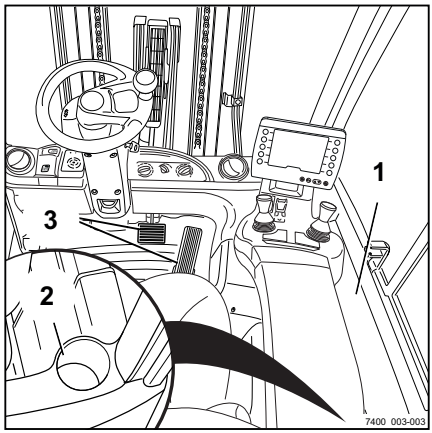

⚠ WARNING

Risk of accident as a result of objects that are not secure!

Objects that are not safely stowed may fall into the footwell and slide between the pedals (3). As a result, the pedals may get stuck. This could prevent braking.

– Stow away objects and check that objects are secure.

– Make sure that stored objects cannot fall from the shelf (1) when the truck sets off, is steered or braked.

– Bottles of max. 1.5 l may be stored in the cup holder (2).

Operating devices and display elements

Display/control unit "STILL Easy Control"

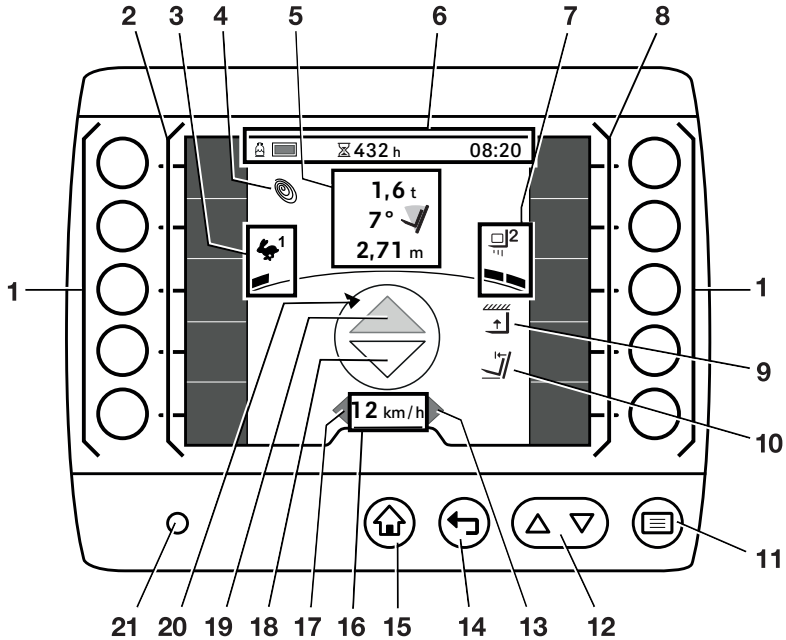

1	Softkeys
2	Left-hand favourites bar
3	Selected drive programme with driving dynamics display
4	Blue-Q symbol
5	Load information (variants): Load measurement Lift-mast tilt angle Lift height
6	Status bar: fuel level, operating hours, time
7	Selected load programme with load dynamics display
8	Right-hand favourites bar
9	Lift height restriction
10	Automatic mast vertical positioning
11	Menu button
12	Scrolling buttons
13	"Right" turn indicator display
14	Back button
15	Main-display button
16	Driving speed or parking brake (P)
17	"Left" turn indicator display
18	"Reverse" drive direction indicator
19	"Forward" drive direction indicator
20	Display for direction of movement of the truck
21	Brightness sensor

The "STILL Easy Control" is a display-operating unit that serves as an operating device for various truck functions, such as lighting or driving dynamics. It uses various symbols, values and display messages to provide information about the status of the truck, e.g. the load statuses, the operating hours and tasks that

are necessary for truck operation. Examples of the displays are provided in this figure. The display-operating unit provides further display options that can be configured by the driver or fleet manager.

– For information about the other display options, see the original operating instructions entitled "STILL Easy Control display-operating unit".

NOTE

Do not put a label over the brightness sensor (21) or cover it with anything. This sensor allows the display to adapt to the current light conditions.

Operating devices for hydraulic and driving functions

Different versions of the operating devices are available for operating the truck's hydraulic functions and drive functions.

The truck can be equipped with the following operating devices:

- **Double mini-lever**
- **Triple mini-lever**
- **Quadruple mini-lever**
- **Joystick 4Plus**
- **Fingertip**
- **Mini-console**

Double mini-lever

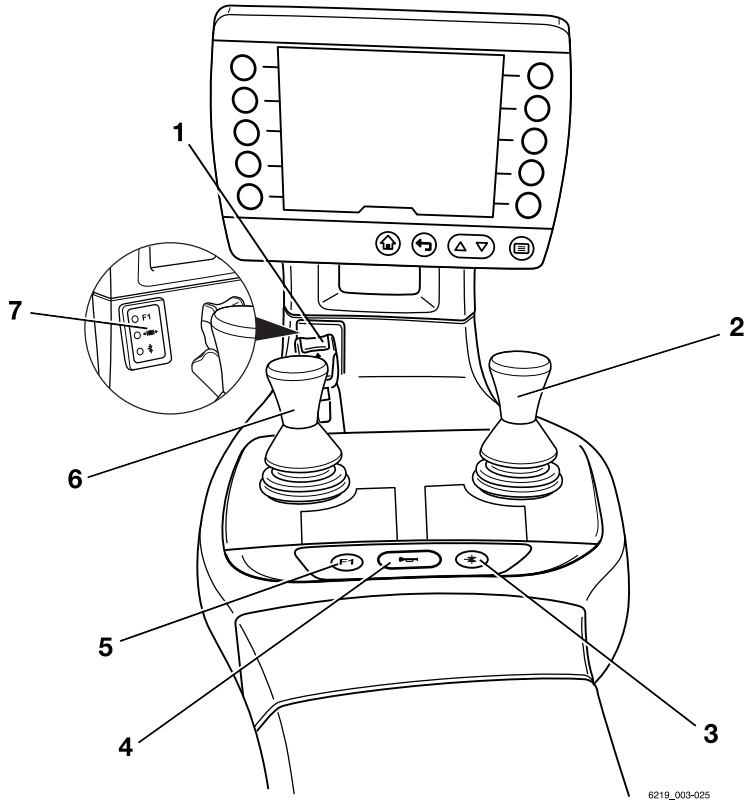

1	Drive direction switch	5	"F1" function key
2	Cross lever "Attachments"	6	"Lift mast" 360° lever
3	Function key for the "5th function"	7	Display field for the hydraulic functions
4	Signal horn button		

NOTE

- *In the dual-pedal version (variant), the drive direction switch (1) is used exclusively to activate the cruise control function (variant). The drive direction is selected exclusively via the pedals in the dual-pedal version.*
- *The authorised service centre can assign different functions to the "F1" function key (5).*

Triple mini-lever

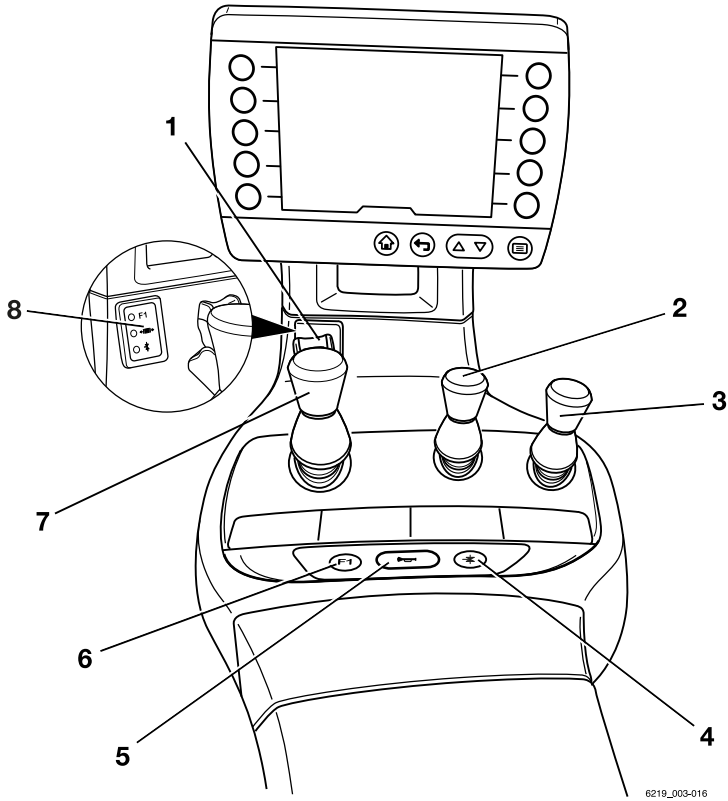

1	Drive direction switch	5	Signal horn button
2	"Auxiliary hydraulics 1" operating lever	6	"F1" function key
3	"Auxiliary hydraulics 2" operating lever	7	"Lift mast" 360° lever
4	Function key for the "5th function"	8	Display field for the hydraulic functions

NOTE

- *In the dual-pedal version (variant), the drive direction switch (1) is used exclusively to activate the cruise control function (variant). The drive direction is selected exclusively via the pedals in the dual-pedal version.*
- *The authorised service centre can assign different functions to the "F1" function key (6).*

Quadruple mini-lever

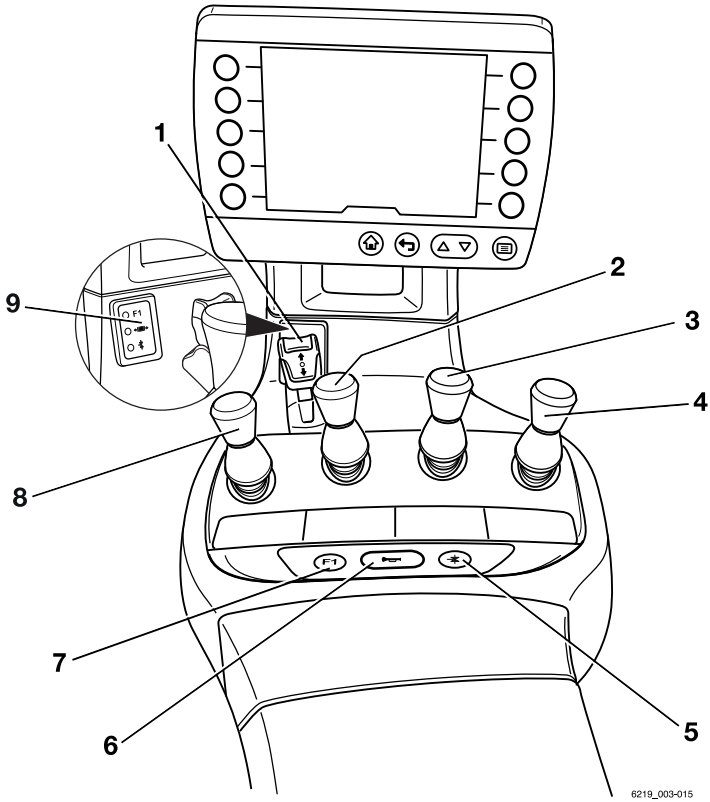

1	Drive direction switch	6	Signal horn button
2	"Tilt" operating lever	7	"F1" function key
3	"Auxiliary hydraulics 1" operating lever	8	"Lift/lower" operating lever
4	"Auxiliary hydraulics 2" operating lever	9	Display field for the hydraulic functions
5	Function key for the "5th function"		

NOTE

- *In the dual-pedal version (variant), the drive direction switch (1) is used exclusively to activate the cruise control function (variant). The drive direction is selected exclusively via the pedals in the dual-pedal version.*
- *The authorised service centre can assign different functions to the "F1" function key (7).*

Joystick 4Plus

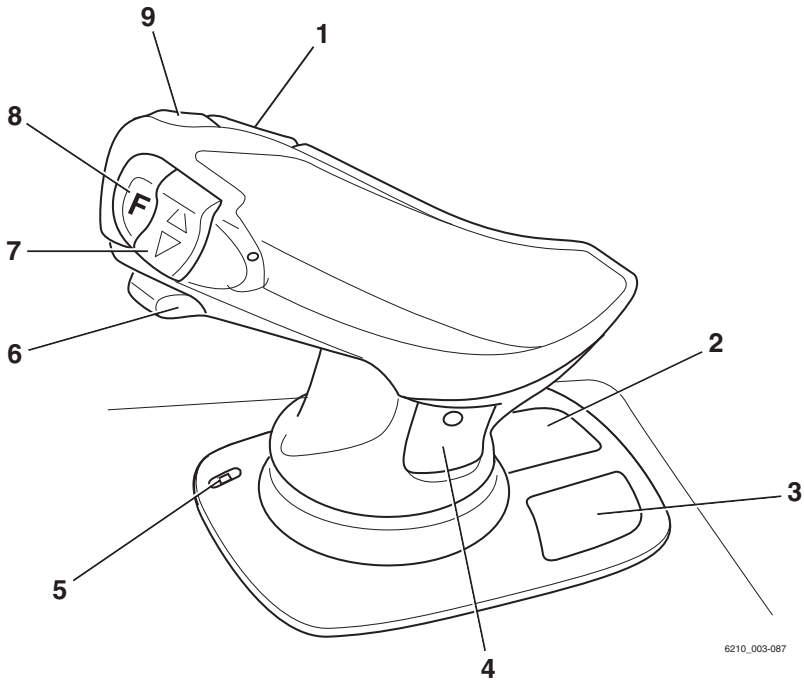

1	Horizontal rocker button for the "3rd hydraulic function", tilting the lift mast	5	LED for the clamp locking mechanism (variant)
2	Symbols for the basic hydraulic functions	6	Slider for the "4th hydraulic function", e.g. side shift frame forwards/backward
3	Pictograms for the 5th hydraulic function and for the clamp locking mechanism (variant)	7	Vertical rocker button for the "drive direction"
4	Pictograms for the 3rd & 4th hydraulic function	8	Shift key "F"
		9	Signal horn button

NOTE

- *The vertical rocker button for the "drive direction" (7) is inoperable in the dual-pedal variant. The drive direction is selected exclusively via the pedals in the dual-pedal version.*

Fingertip

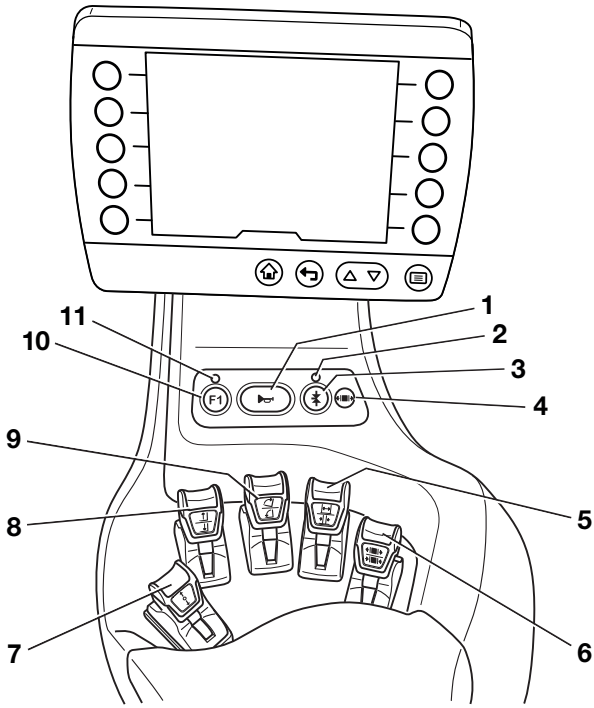

1	Signal horn button	7	Drive direction switch
2	LED for the "5th function"	8	"Lift/lower" operating lever
3	Function key for the "5th function"	9	"Tilt" operating lever
4	LED for the "Clamp release"	10	"F1" function key
5	Operating lever for "Auxiliary hydraulics 1"	11	LED for "F1"
6	Operating lever for "Auxiliary hydraulics 2"		

NOTE

- *In the dual-pedal version (variant), the drive direction switch (7) is used exclusively to activate the cruise control function (variant). The drive direction is selected exclusively via the pedals in the dual-pedal version.*
- *The authorised service centre can assign different functions to the "F1" function key (10).*

Travel direction selector and indicator module (variant) ▷

The travel direction selector and indicator module is located on the steering column below the steering wheel.

NOTE

If the drive direction switch on the operating device is defective and the truck stops in a danger area, the drive direction selection lever on the travel direction selector and indicator module can be used for emergency driving. Refer to the section entitled "Emergency driving via the drive direction switch/drive direction selection lever" in the chapter entitled "Procedure in emergencies".

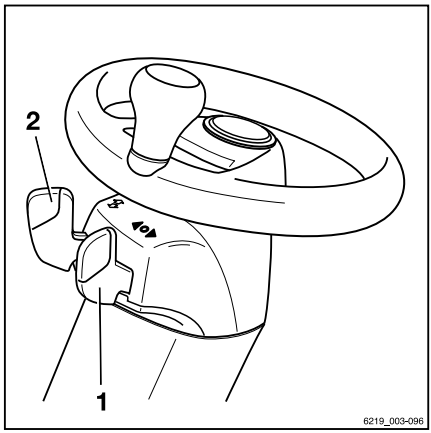

1 Drive direction selection lever
2 Turn indicator switch

4

Operation

Checks and tasks before daily use

Visual inspections and function checking

⚠ WARNING

Risk of injury from falling off the truck!

When climbing onto the truck, there is a risk of getting stuck or slipping and falling. Use suitable equipment to reach higher points on the truck.

- Use only the steps provided for this purpose to climb onto the truck.
- Use equipment such as stepladders or platforms to reach inaccessible areas.

Damage to the truck or the attachment (variant), non-functional switches or safety systems and modification of predefined set values can lead to unpredictable and dangerous situations.
The following checks and tasks enable causes of this type to be identified in good time. It is important to run through all the checks and tasks listed in the following table from top to bottom before daily use of the truck.
If damage or other defects are identified on the truck or the attachment (variant), the truck must not be used until it has been properly repaired.

Ensure that the truck is safe for operation each day before it is used:

Component	Course of action
Fork arms, general lifting accessories	Perform a visual inspection to check for deformation and wear (e.g. to check if they are bent, broken or feature significant wear). Check the condition and function of the fork locking devices for preventing lifting and shifting.
Lift mast roller tracks	Make sure that there is a film of grease.
Load chains	Perform a visual inspection to ensure that the chains are intact and have adequate and even tension.

Component	Course of action
Attachments (variant)	Ensure that the attachments are mounted correctly in accordance with the operating instructions from the manufacturer. Perform a visual inspection to ensure that the attachments are intact and are leak-tight. Perform checks to ensure that the attachments are working correctly.
Underside	Check the area under the truck for leaking consumables.
Overhead guard, guard grille (variant)	Perform a visual inspection for integrity. Check for secure mounting.
Steps	Make sure that they are clean (free of ice, not slippery).
Panes of glass (variant)	Perform a visual inspection for integrity. Make sure that they are clean (also free of ice).
Handholds	Check for secure mounting.
Maintenance lids	Check the close function and close the lid.
Fuel system, fuel tank	Perform a visual inspection for damage and leakages. Have damaged components replaced only by the authorised service centre.
Battery	Perform a visual inspection for integrity and deformation.
Bonnet and side flap	Perform a visual inspection for integrity and deformation. Check that the interlock is in good condition and is working correctly. Check the close function and close the lid.
Coupling pin, automatic tow coupling (variant)	Perform a visual inspection for deformation and wear (for example: bent, torn, broken). Check the securing bush in the counterweight for integrity and to ensure that it is working correctly. Check that the linchpin is present and working correctly (chain, rope, split pin). If coupling and decoupling operations are carried out more frequently than two to three times per shift, relubricate the automatic tow coupling (variant) at the lubricating nipple.
Labelling, adhesive labels	Check for presence, integrity and legibility. Replace damaged or missing adhesive labels in accordance with the section entitled "Labelling points".
Driver's seat, seat belt	Check the integrity and function.
Lighting, warning units	Check the integrity and function.

Component	Course of action
Working hydraulics	To activate all available hydraulic functions once, actuate all hydraulic operating devices once. As a general rule: If hydraulic valves have not been operated for a long time, their function may be impaired. This applies regardless of the type and design of the hydraulic valves. This is especially true for hydraulic functions for attachments that are not used frequently. Even if the attachment is not currently mounted, operate these hydraulic functions as well.
Antistatic belt	Perform a visual inspection for integrity. Ensure cleanliness. The antistatic belt must be long enough to touch the ground adequately.
Lift and tilt cylinders, tank, valve block, hoses, pipes, connections	Perform a visual inspection for damage and leakages. Check the area under the truck for leaking consumables. Have damaged components replaced only by the authorised service centre.
Wheels, tyres	Perform a visual inspection for wear and damage. Make sure that only rims of the same type from the same manufacturer are fitted. In the event of uneven tyre wear, replace both tyres. Observe the safety regulations in the section entitled "Tyres".
Axle	Make sure that no consumables are escaping from the axle.
Engine	Check the engine oil level. Top up if necessary. Check the cooling fluid level. Top up if necessary.
Brake system	Check that the truck is working correctly. Refer to the section "Checking the brake system for correct function".

– Do not use the truck if there is any damage or defects.

– Contact the authorised service centre.

Climbing in and out of the truck

⚠ WARNING

Risk of injury when climbing in and out of the truck due to slipping, hitting yourself on parts of the truck or becoming stuck!

If the footwell cover is very dirty or smeared with oil, there is a risk of slipping. There is a risk of hitting your head on the post of the overhead guard or of your clothes becoming stuck when climbing out of the truck.

– Ensure that the footwell cover is non-slip.
– Do not jump into or out of the truck.
– Ensure that you have a secure grip on the truck.

⚠ WARNING

Risk of injury when jumping off the truck!

If your clothing or jewellery (e.g. watch, ring etc.) becomes stuck on a component while you are jumping out of the truck, this can lead to serious injuries (e.g. from falling, loss of fingers etc.). It is forbidden to jump off the truck.

– Do not jump off the truck.
– Do not wear jewellery at work.
– Do not wear loose-fitting workwear.

⚠ CAUTION

Components may become damaged through incorrect use!

Truck components, such as the driver's seat, steering wheel, parking brake lever etc., are not designed to be used for climbing in and out of the truck and can be damaged due to misuse.

– Only use the devices specifically designed for the purpose of climbing in and out of the truck.

To assist with climbing in and out of the truck, the footwell must be used as a step (5) and the handle (1) must be used for support. The post of the overhead guard (2) can also be used for support.

Always climb into the truck in a forwards motion:

- Grip the handle (1) with your left hand and hold on.
- Put your left foot on the step (4).
- Enter the truck with your right foot first and sit down on the driver's seat (3).

Always climb out of the truck backwards:

- Grip the handle (1) with your left hand and hold on.
- Stand up from the driver's seat and place your left foot on the step (4).
- Climb out of the truck right foot first.

▷

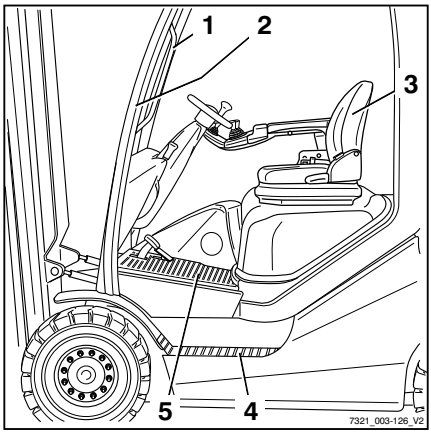

Operating the signal horn

– Push the signal horn button (1).

The signal horn sounds.

NOTE

The signal horn is used to warn people against imminent danger or to announce your intention to overtake.

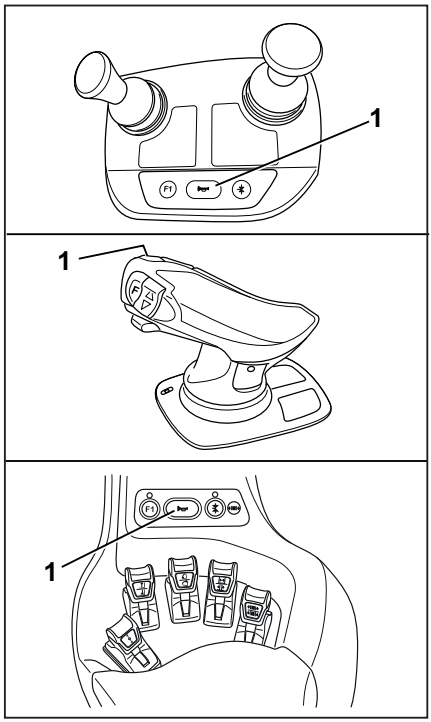

Driver's cab

DANGER

Risk of fatal injury in the event of falling from the truck if it tips over!

In order to prevent the driver from sliding underneath the truck and being crushed if the truck tips over, a restraint system must be in place and must be used. The restraint system prevents the driver from being thrown from the truck if it tips over. The cab door must be sturdy and be closed in order for the driver's cab to function as a driver restraint system. Fabric-covered cabs (variant) with doors made of plastic or canvas do not constitute a driver restraint system and offer no protection from the consequences of the truck tipping over!

– Close the cab door prior to commissioning.

– If the door is open or has been removed, use a comparably secure restraint system.

– We recommend that you always use the seat belt.

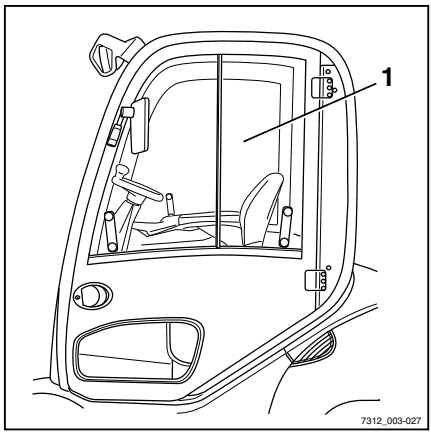

Checking the condition of the wheels and tyres

⚠ WARNING

Risk of accident! With uneven wear or incorrect air pressure, the stability of the truck decreases and the braking distance increases.

– Change worn or damaged tyres without delay.

⚠ WARNING

Risk of tipping!

Tyre quality affects the stability of the truck.

If you wish to use a different type of tyre on the truck from the tyres approved by the truck manufacturer, or tyres from a different manufacturer, you must first obtain approval from the truck manufacturer.

⚠ WARNING

Risk to stability!

When using pneumatic tyres or solid rubber tyres, rim wheel parts must never be changed and rim wheel parts from different manufacturers must not be mixed.

NOTE

Only approved types of tyre may be used; see chapter entitled "Tyres".

– Check tyres (1) for wear or damage. ▷

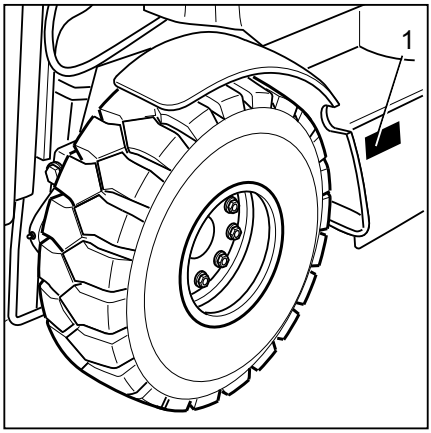

Tyres must not be damaged or excessively worn. They must be worn evenly on both sides.

– If pneumatic tyres are fitted, check the air pressure. The air pressure indicated on the adhesive labels (2) must be observed.

NOTE

Observe the safety principles outlined in the chapter entitled "Tyres".

Checking the brake system for correct function

⚠ DANGER

Risk of accident due to failure of the brake system!

If the brake system fails, the truck will be insufficiently braked or will not be braked at all.

– Do not operate the truck with a defective brake system.

Checking the regenerative brake

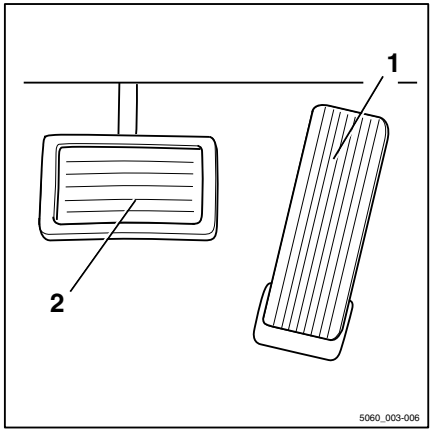

⚠ DANGER

Risk of accident due to reduced braking power!

The braking effect of the regenerative brake may be insufficient for emergency braking.

– Always press the brake pedal (2) for emergency braking.

If the driving speed is restricted or if the opposite drive direction is selected, the truck is braked using the regenerative brake.

– To actuate this, release the accelerator pedal (1).

The truck must decelerate and remain stationary.

– If the truck does not slow down, press the brake pedal (2).

Checking the service brake

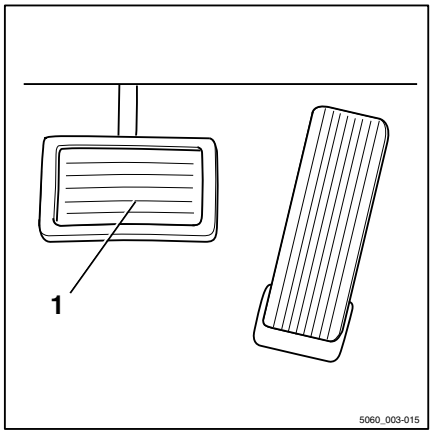

– Release the parking brake.

– Press the brake pedal (1).

There must be a slight pedal clearance and then a noticeable pressure point at the brake.

– Accelerate the unladen truck in a clear area.

– Depress the brake pedal firmly.

The truck must decelerate noticeably.

Checking the parking brake on a gradient or a ramp

DANGER

Risk to life if the truck rolls away!

The truck could run people over if the parking brake is not applied.

– Do not exit the truck during the following check.

– Stop the truck on a steep gradient (e.g. a ramp) and actuate the parking brake.

The parking brake must hold the truck on the incline.

If the truck rolls back despite the parking brake being applied:

– Press the brake pedal and stop the truck.

– Secure the truck with wedges so that the truck does not roll away.

– Have the parking brake checked and repaired by the authorised service centre.

Checking the parking brake on a level surface

WARNING

Risk of accident from abrupt deceleration!

The truck will decelerate abruptly if the parking brake is applied.

– Fasten the seat belt.

– Activate the available restraint systems.

WARNING

There is no electrical braking assistance when the key switch is switched off!

Switching off the key switch will de-energise the entire electrical system. The regenerative brake will not be available.

⚠ CAUTION

There is no power steering when the key switch is switched off!

The truck is equipped with hydraulic power steering. Switching off the key switch switches off the hydraulics. Steering forces are increased by the remaining emergency steering function.

– Steer with a higher level of force.

– Find a sufficiently large and open area in which nobody will be endangered or obstructed.

– Accelerate the truck to walking speed.

– Use the key switch to switch off the engine.

– Activate the parking brake via the actuation push button.

The parking brake slows the truck with a low level of deceleration.

– To increase the level of deceleration, either press and hold the actuating button for longer or press it several times.

The truck must decelerate and remain stationary.

NOTE

The internal combustion engine must be switched on in order to release the parking brake.

– If the truck only coasts and does not decelerate or decelerates only slightly, stop the truck using the service brake.

– Secure the truck with wedges so that the truck does not roll away.

– Have the parking brake checked and repaired by the authorised service centre.

Checking the steering system for ▷ correct function

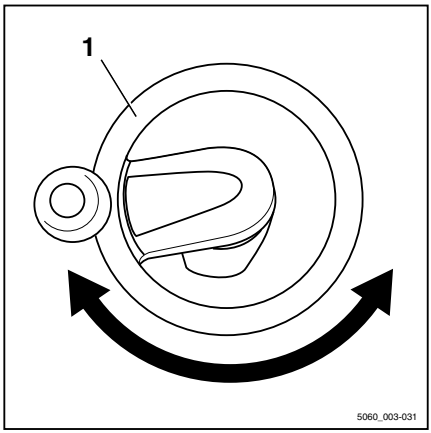

⚠ DANGER

If the hydraulics fail, there is a risk of accident as the steering characteristics have changed.

– Do not operate the truck if it has a defective steering system.

– Operate steering wheel (1). The steering play while stationary must not be more than two finger widths.

NOTE

If the truck is switched on with the steering wheel turned, the maximum driving speed is limited. Travel speed limitation is removed as soon as the steering wheel is moved out of a cornering position into the straight-ahead position. This requires a change in steering angle of about half a revolution.

Function checking of the automatic mast vertical positioning function (variant)

⚠ CAUTION

Risk of damage to property due to the lift mast colliding with racks or other objects!

– Before using the "automatic mast vertical positioning" assistance system, position the truck at a sufficient distance from racks and other objects.

– To check the function of the automatic mast vertical positioning function, proceed as follows:

– Press the softkey.

The symbol appears in the display.

– Tilt back the lift mast until it reaches the end stop.

– Tilt the lift mast forwards.

The lift mast must stop in the vertical position.

The automatic mast vertical positioning can be used.

– If the lift mast does not stop in the vertical position, do not use the assistance system.

– In this case, contact your authorised service centre.

Checking the automatic tow coupling (variant)

⚠ WARNING

Risk of trapping or crushing.

– Ensure that the coupling is closed before carrying out any maintenance work on the coupling.

– Do not reach into the open coupling.

NOTE

If the coupling is engaged and disengaged more than 2–3 times per shift, the coupling must be relubricated using the lubricating nipple.

– Check the coupling pin (1) for damage.

– Clean any dirt from the coupling.

– Make sure that the closed coupling pin is engaged in the mounting hole (2).

Lubricating the automatic tow coupling (variant)

⚠ WARNING

Risk of trapping or crushing.

– Always close the coupling before carrying out any maintenance work on the coupling. See the sections on automatic tow couplings in the chapter "Trailer and load".

– Do not reach into the open coupling.

NOTE

If the coupling is engaged and disengaged more than 2–3 times per shift, the coupling must be relubricated using the lubricating nipple every day.

▷

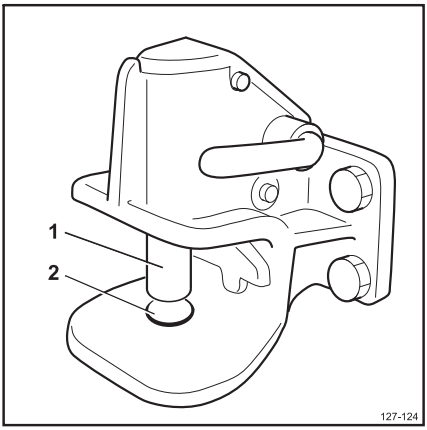

This is a schematic view of a tow coupling. Details of the tow coupling actually installed may differ.

NOTE

Always grease the tow coupling after cleaning it. Use lubricating grease as specified in the chapter entitled "Maintenance data table". It is better to apply a little grease to the tow coupling frequently than to apply a lot of grease infrequently.

– Re-lubricate the coupling using the lubricating nipples. The number of lubricating nipples may vary depending on the type of tow coupling. When doing so, observe the manufacturer's operating instructions.

– Grease the coupling pin (1) and the area around the mounting hole (2).

Driver's seats

Adjusting the MSG 65 and MSG 75 driver's seat

⚠ WARNING

Risk of accident from sudden adjustment of the seat or of the seat backrest!

The inadvertent adjustment of the seat or of the seat backrest can lead to uncontrolled movements by the driver. The steering or the operating devices can then be actuated unintentionally. This may cause uncontrolled movements of the truck or of the load.

– **Do not** adjust the seat or the seat backrest while the truck is in motion.
– Adjust the seat and the seat backrest so that all operating devices can be actuated safely.
– Ensure that the seat and the seat backrest are securely engaged.

⚠ WARNING

On some equipment variants, the amount of head clearance on the truck may be restricted.

On these specific equipment variants, the distance between the driver's head and the lower edge of the roofing sheet must be at least 40 mm.

NOTE

Observe any separate operating instructions for the seat.

⚠ WARNING

To obtain optimum seat cushioning, you must adjust the seat suspension to your own body weight. This course of action is better for your back and protects your health.

– To avoid injuries, keep the swivel area of the seat clear of objects.

Moving the driver's seat

- Raise the lever (1) and hold it in position.
- Push the driver's seat into the required position.
- Release the lever.
- Ensure that the driver's seat is securely engaged.

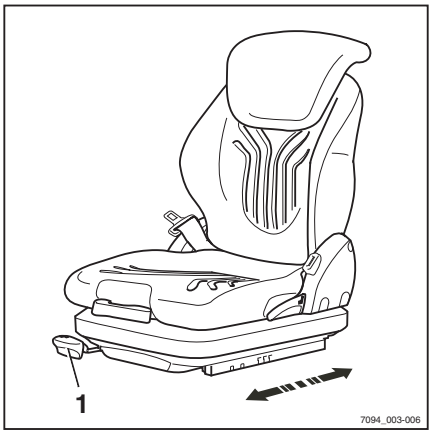

Adjusting the seat backrest

Do not apply pressure to the seat backrest when adjusting the seat backrest.

- Raise the lever (2) and hold it in position.
- Push the seat backrest into the required position.
- Release the lever.
- Ensure that the seat backrest is securely engaged.

NOTE

The backwards tilt angle of the seat backrest can be restricted by the structure of the truck.

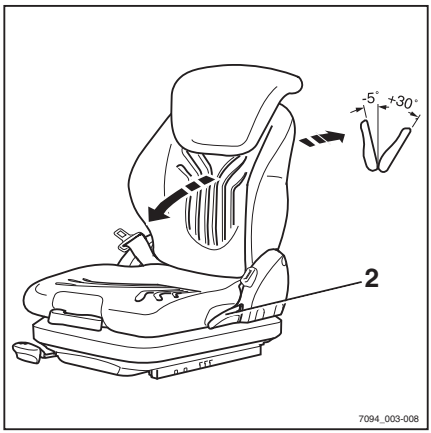

Adjusting the MSG 65/MSG 75 seat suspension ▷

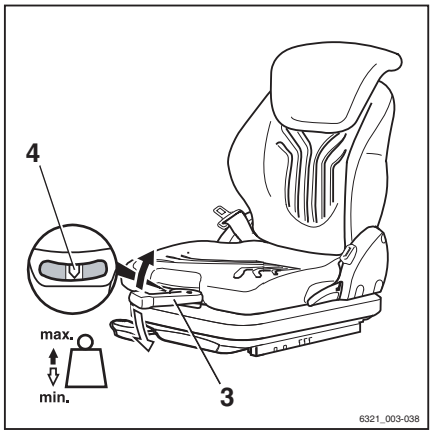

NOTE

The MSG 65/MSG 75 driver's seat is designed for people weighing between 45 kg and 170 kg. The driver's seat can be adjusted to suit the weight of the individual driver. To obtain optimal settings for the seat suspension, the driver must perform the adjustment whilst sitting on the seat.

NOTE

The MSG 75 seat is equipped with electric air suspension that is activated using an electric switch instead of the lever (3).

– Fold out the weight-adjusting lever (3).
– Pump the lever up or down to set the driver's weight.
– Return the weight-adjusting lever to the initial central position each time before raising it again (a click can be heard when this position is reached).
– Retract the weight-adjusting lever once the adjustment is complete.

NOTE

The correct driver's weight has been selected when the arrow (4) is in the centre position in the inspection window. Once the minimum or maximum weight setting is reached, the seat will not move any further even when you pump the weight-adjusting lever.

Adjusting the longitudinal horizontal suspension (variant) ▷

If the driver's seat is equipped with the "longitudinal horizontal suspension" variant, impacts in the drive direction are damped by additional seat suspension. The locking lever (5) on the left-hand side of the driver's seat activates and locks the longitudinal horizontal suspension.

– To lock the longitudinal horizontal suspension, move the locking lever (5) to the left (A).

– To activate the longitudinal horizontal suspension, move the locking lever (5) to the right (B).

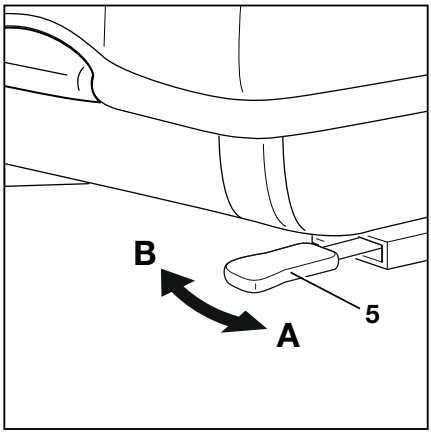

A Longitudinal horizontal suspension activated
B Longitudinal horizontal suspension blocked

NOTE

If the longitudinal horizontal suspension is blocked, the suspension comfort is significantly lower. Impacts are much more noticeable.

Adjusting the lumbar support (variant) ▷

NOTE

The lumbar support can be adjusted to suit the contours of the individual driver's spine. Adjusting the lumbar support moves a convex support cushion into the upper or lower part of the backrest.

– Turn the turning knob (6) up or down until the lumbar support is in the required position.

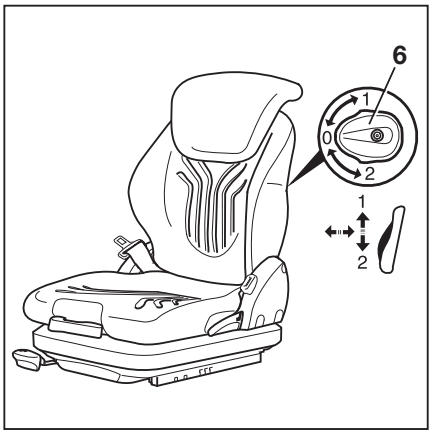

Adjusting the backrest extension (variant)

▷

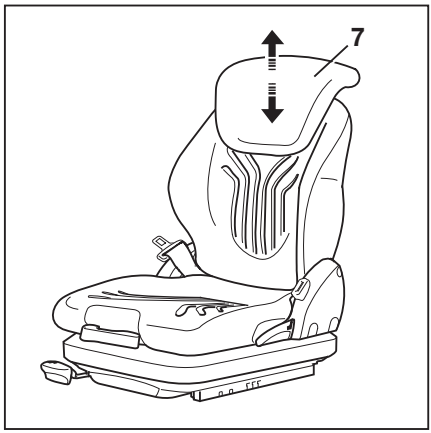

– Adjust the backrest extension (7) by pulling it out and pushing it into the desired position.

To remove the backrest extension, move it past the end stop by firmly pushing it upwards.

Switching the seat heater (variant) on and off

▷

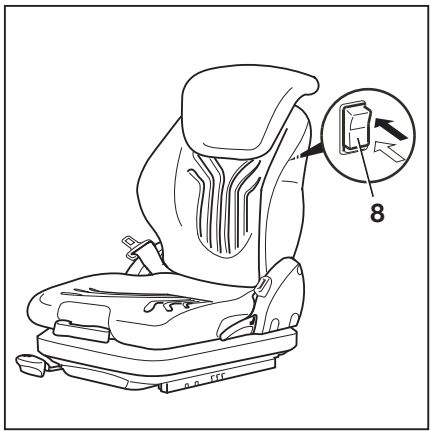

NOTE

The seat heater only works when the driver is sitting on the driver's seat.

– Switch the seat heater (8) on or off using the switch.

Swivelling the driver's seat to the right for reverse travel (variant) ▷

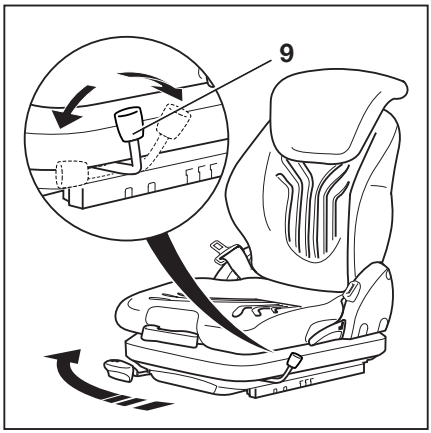

⚠ WARNING

Risk of accident due to the seat swivelling.

If the driver's seat swivels while the truck is in motion, the seat position is unstable.

– Swivel the driver's seat only when the truck is at a standstill.

The driver's seat can be swivelled to the right to make reverse travel easier. The optimised seat position means that it is not necessary to turn your upper body round as far. This makes it easier to look backwards.

To swivel the seat to the right for reverse travel:

– Sit on the driver's seat.
– To swivel the driver's seat, pull the lever (9) back and hold it in position.
– Swivel the driver's seat to the right until it reaches the stop.
– Move the lever (9) forwards again.
– Make sure that the driver's seat is securely engaged.

Swivelling the driver's seat to the right is intended only for reverse travel. The driver's seat must be swivelled back into place for forward travel.

To swivel the seat back for forward travel:

– To swivel the driver's seat back to its original position, pull the lever (9) back and hold it in position.
– Swivel the driver's seat to the left until it reaches the stop.
– Move the lever (9) forwards again.
– Make sure that the driver's seat is securely engaged.

Adjusting the armrest

⚠ DANGER

There is a risk of accident if the armrest lowers suddenly, causing the driver to move in an uncontrolled manner.

This may result in unintentional actuation of the steering or operating devices and thus cause the truck or load to move in an uncontrolled fashion.

- Do not adjust the armrest while driving.
- Adjust the armrest so that all operating devices can be actuated safely.
- Ensure that the armrest is securely tightened.

Adjusting the length of the armrest

▷

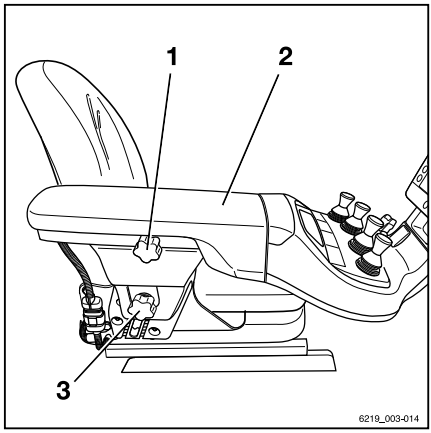

- Release the star-grip handle (1) by turning to the left.
- Shift the armrest (2) into the desired position.
- Tighten the star-grip handle by turning to the right.
- Check that the armrest is firmly attached.

Adjusting the height of the armrest

- Release the hand wheel (3) by turning to the left.
- Shift the armrest (2) into the desired position.
- Tighten the hand wheel by turning to the right.
- Check that the armrest is firmly attached.

Longitudinal horizontal suspension (variant)

If the driver's seat is equipped with the "longitudinal horizontal suspension" variant, impacts in the drive direction are damped by additional seat suspension.

Longitudinal seat adjustment

As with a standard driver's seat, the lever (1) on the front right-hand side of the driver's seat can be used to adjust the longitudinal position of the driver's seat.

- To unlock the driver's seat, pull up the lever (1) and hold it place.
- Push the driver's seat into the required position.
- To lock the driver's seat again, release the lever (1).
- Gently slide the seat back and forth to lock the seat in place.

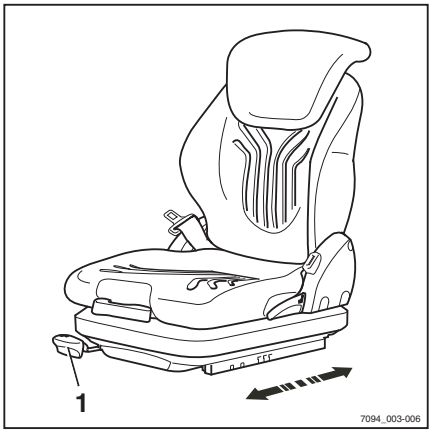

Adjusting the longitudinal horizontal suspension (variant)

If the driver's seat is equipped with the "longitudinal horizontal suspension" variant, impacts in the drive direction are damped by additional seat suspension. The locking lever (5) on the left-hand side of the driver's seat activates and locks the longitudinal horizontal suspension.

- To lock the longitudinal horizontal suspension, move the locking lever (5) to the left (A).
- To activate the longitudinal horizontal suspension, move the locking lever (5) to the right (B).

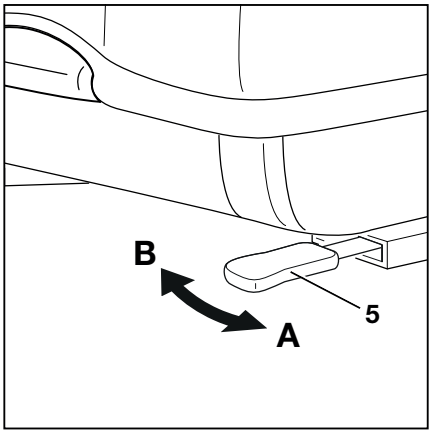

A Longitudinal horizontal suspension activated
B Longitudinal horizontal suspension blocked

NOTE

If the longitudinal horizontal suspension is blocked, the suspension comfort is significantly lower. Impacts are much more noticeable.

Seat belt

⚠ DANGER

Risk of injury if the truck tips over!

Even if an approved restraint system is in use, there is still a residual risk that the driver could be injured if the truck tips over.

This risk of injury can be reduced through the combined use of the restraint system and the seat belt.

In addition, the seat belt protects against the consequences of rear-end collisions and falling off a lorry ramp.

– Recommendation: When operating the truck on a lorry ramp, fasten the seat belt in addition to using the driver's cab, the bracket door or the restraining bracket.

⚠ DANGER

Only bracket doors, restraining brackets and the driver's cab (variants) with closed, fixed doors constitute driver restraint systems. Plastic doors (weather protection) do not constitute a restraint system!

If the doors are open or have been removed, you must use an alternative suitable restraint system (e.g. a seat belt)!

Fastening the seat belt

▷

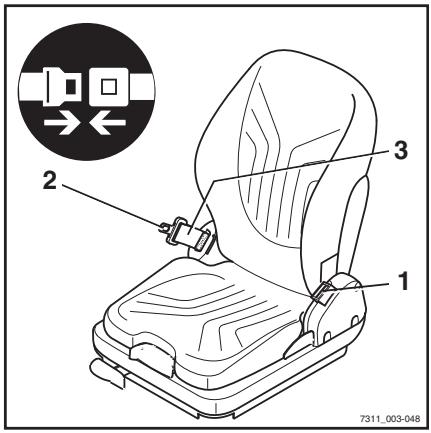

⚠ DANGER

Mortal danger when driving without wearing a seat belt!

If the seat belt is not fastened and the truck tips over or crashes into an obstacle, the driver can be thrown out of the truck. The driver could slide under the truck or collide with an obstacle.

– Fasten the seat belt before every trip.
– Do not twist the seat belt when fastening it.
– Only use the seat belt to secure one person!
– Have any malfunctions repaired by the authorised service centre.

NOTE

The buckle has a buckle switch. When the belt was not fastened, the following occurred:

- *The message* `Close seat belt` *appears on the display-operating unit.*
- *The truck will not drive at speeds faster than 4 km/h.*
- *The hydraulic functions are blocked.*

NOTE

One variant prevents the truck from being driven at all if the seatbelt is not fastened. The message `Close seat belt` *appears on the display.*

– Pull the seat belt (3) smoothly out of the belt retractor and place over the thighs close to the body.

NOTE

Sit back as far as possible so that your back is resting on the seat backrest. The automatic blocking mechanism permits sufficient freedom of movement on the seat.

– Click the belt tongue (2) into the buckle (1).

– Check the tension of the seat belt. The belt must fit closely around your body.

Special feature for trucks with a cab (variant)

If the truck is equipped with a cab (variant), it will have a cab door sensor. If the seat belt is not fastened and the cab door is not closed, the driving speed is limited to 4 km/h. The message `Close cab door or seat belt !` appears on the display.

NOTE

One variant that prevents the truck from being driven at all if the cab door is open. The message `Close cab door !` *appears in the display.*

Special feature for trucks with HSR restraint systems (variant)

If the bracket is not closed, the message `Close restraint system` 🔓 appears in the display.

Fastening on a steep slope

▷

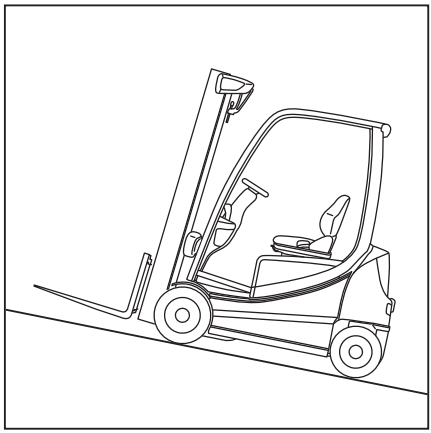

The automatic blocking mechanism prevents the belt from being extended whenever the truck is on a steep gradient. It is no longer possible to pull the seat belt out of the belt retractor.

– Move away carefully from the slope.

– Fasten the seat belt.

Releasing the seat belt

▷

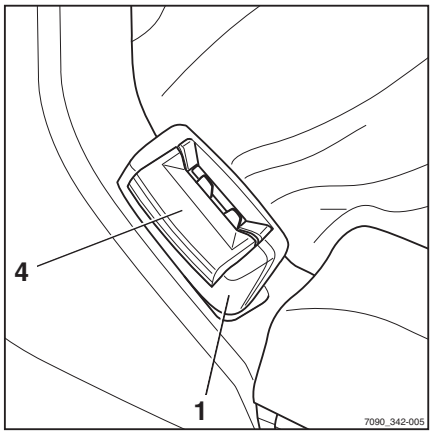

– Push the red button (4) on the buckle (1).

– Slowly guide the belt tongue back to the retractor by hand.

NOTE

Slowly allow the seat belt to retract. The automatic blocking mechanism may be triggered if the belt tongue strikes the housing. It will then no longer be possible to pull the seat belt out with the usual force.

– Using increased force, pull the seat belt around 10 to 15 mm out of the retractor to disengage the blocking mechanism.

– Slowly allow the seat belt to retract again.

– Protect the seat belt from dirt, for example, by covering it.

Malfunction due to cold

– If the buckle or belt retractor are frozen, thaw the buckle or the belt retractor and dry the parts.

This prevents the parts from refreezing.

⚠ CAUTION

The seat belt may be damaged by heat!

Do not subject the buckle or belt retractor to excessive heat when thawing.

– Do not use air warmer than 60°C when thawing.

Pre-Shift Check

Description of the Pre-Shift Check (variant)

The Pre-Shift Check is a guided dialogue in the display-operating unit. It also helps the driver conduct the necessary "visual inspections and function checking" before everyday use. After the truck has been switched on, the driver must answer questions about the condition of the forklift truck with `Yes` or `No`.

While the driver is doing this, the truck functions are available with restrictions. The driving speed and hydraulic functions are restricted.

To commission the truck, the authorised service centre can compile the Pre-Shift Check from a question catalogue in consultation with the fleet manager. If a question catalogue has not been compiled, the only question stored by default is `Truck ready for operation?`

If the question is answered with "No", an entry is made in the history. No restrictions in truck function for this scenario are stored by default. The authorised service centre can replace this question with a question from the question catalogue.

In addition, the fleet manager has the following options:

- The fleet manager can view the results of all checks via the `History`.
- The fleet manager can define the shift start for three different shifts. The Pre-Shift Check must be performed when these shifts start.

  If the truck is equipped with "FleetManager", the shifts are defined on the FleetManager interface. See the relevant operating instructions.
- If, due to a negative test result, truck functions are restricted, the fleet manager can reset these restrictions.
- The fleet manager can specify the question sequence.

Process

– Switch the truck on.

The question `Truck ready for operation?` appears by default. This question is not associated with any restrictions on the truck functions. The authorised service centre can replace this question with a question from the question catalogue.

The next question appears.

Some of the questions require a functional test, such as the functional test of the lighting.

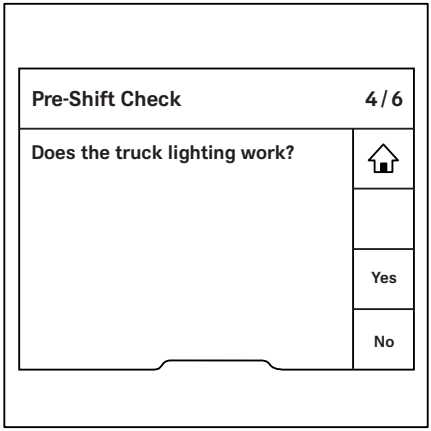

NOTE

The main display symbol appears only when it is required for the test.

– To access the main display, press the main display button or the softkey .

The main display contains the message `To complete Pre-Shift Check, press` .

This means that the Pre-Shift Check is still active and the truck functions are restricted.

– To acknowledge the message, press the softkey.

– Switch on and check the function to be tested, e.g. lighting.

– Press the back button to go back to the Pre-Shift Check.

– Answer the question based on the result of the function check.

The next question appears.

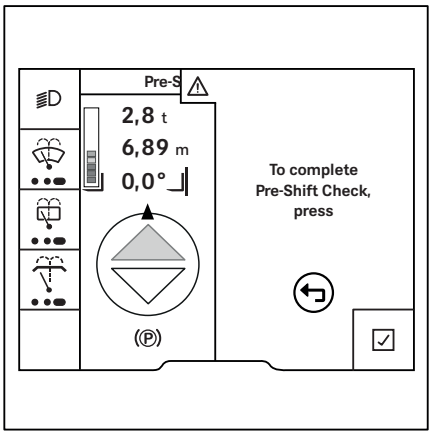

NOTE

If no questions regarding the Pre-Shift Check have been compiled, the question `Truck ready for operation?` *is displayed..*

If the truck has to be moved for a test, e.g. for a brake test, the parking brake can easily be released. The message `To complete Pre-Shift Check, press` is displayed. The truck can be moved at reduced

speed. When the parking brake is applied again, the view returns to Pre-Shift Check.

At the end of the check, truck functions are restricted if they have been adjusted as a reaction to a negative test result. The message `Pre-Shift Check truck restrictions active` shows that truck functions are restricted. As long as the truck functions are restricted, no further Pre-Shift Check is requested at the start of a new shift. The check is only requested again after the fleet manager has reset the restrictions.

All questions

NOTE

This question catalogue contains questions about different types of industrial trucks. It may therefore also contain questions that are not applicable to your industrial truck.

The authorised service centre can use this question catalogue to put together the Pre-Shift Check during commissioning:

Are the fork arms damaged (e.g. bent or cracked)?
Are the fork arms securely mounted and the locking devices undamaged?
Are the roller tracks on the lift mast and lift chassis sufficiently greased?
Are the load chains damaged?
Are the load chains sufficiently tensioned and loaded equally.?
Are all attachments securely mounted and undamaged? Are they in working order?
Are operating fluids (e.g. oil, water, fuel) visibly leaking?
Are the wheels damaged? Are they worn beyond permissible limits?
Is the tyre pressure correct?
Is the overhead guard visibly damaged?
Is the entry area or footwell dirty or slippery?
Are the windows clean, free of ice and undamaged?
Are the maintenance lids securely closed?
Is the battery door/hood undamaged and securely closed?
Is the battery lock present, undamaged and closed?
Is the battery connection assembly dirty or damaged (e.g. housing deformed, contacts corroded)?
Is the towing device damaged?

Is the capacity rating plate present, undamaged, and legible?
Is the driver restraint system damaged?
Does the horn work?
Does the truck lighting work?
Do the warning lights work?
Is the antistatic belt present and does it have sufficient contact with the floor?
Is the corona electrode present and clean?
Does the parking brake work properly?
Does the service brake work properly?
Does the steering work properly?
Does the emergency off work?
Is the battery dirty or obviously damaged?
Are all decal information and adhesive labels present and legible?
Is the load backrest undamaged?
Does the accelerator pedal work properly?
Is the engine compartment dirty or does it contain foreign objects?
Are the lift mast or the fork carriage obviously damaged?
Do the working hydraulics work properly according to the labelling?
Are the mirrors dirty or damaged?
Is the gas tank or its mounting obviously damaged?
Can unusual noises be heard when the industrial truck is used?
Is there any other obvious damage to the truck?
Does the washer system work?
Is the bonnet undamaged and securely closed?

If no Pre-Shift Check questions have been compiled, the initial configuration as at the time of delivery appears.

Defining the question sequence

The questions for the Pre-Shift Check can be defined in a random sequence or in a fixed sequence.

The random sequence is advisable, because the questions are then read more consciously by the driver. This means that there is no routine aspect.

– Activate the "Access authorisation for the fleet manager".

– Press the `Service` softkey. ▷

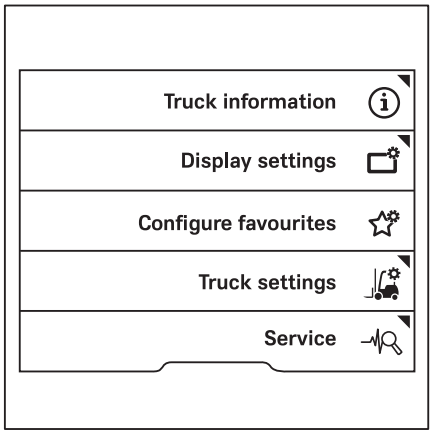

– Press the scroll keys △ ▽ until the `Pre-Shift Check` menu appears. ▷
– Press the `Pre-Shift Check` softkey.

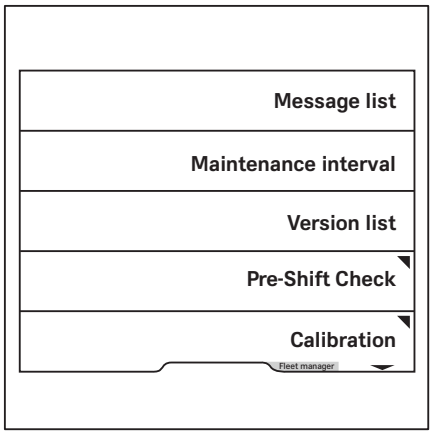

The `Pre-Shift Check` menu appears. ▷

– Press the `Question sequence` softkey.

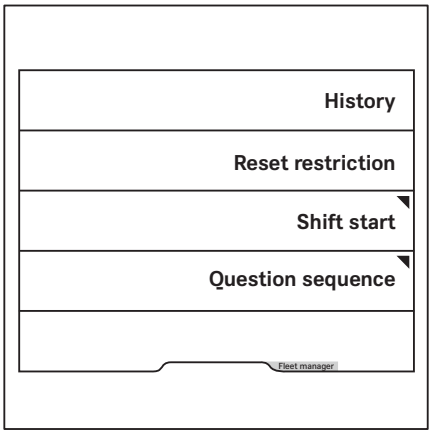

Pressing the softkey allows fixed or random question sequences to be selected. ▷

The orange activation bar displays the current selection.

– To access the main display, press the main display button ⌂.

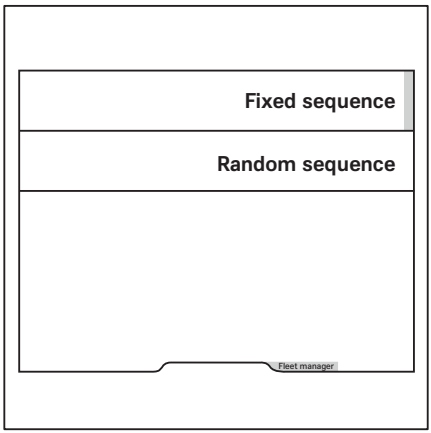

Displaying the history

The fleet manager can display a Pre-Shift Check history.

– Activate the "Access authorisation for the fleet manager".

– Press the `Service` softkey. ▷

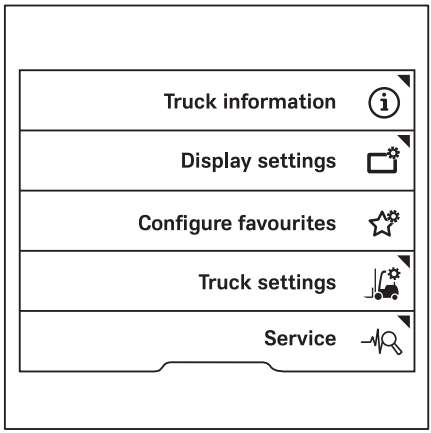

– Press the scroll keys △ ▽ until the `Pre-Shift Check` menu appears. ▷
– Press the `Pre-Shift Check` softkey.

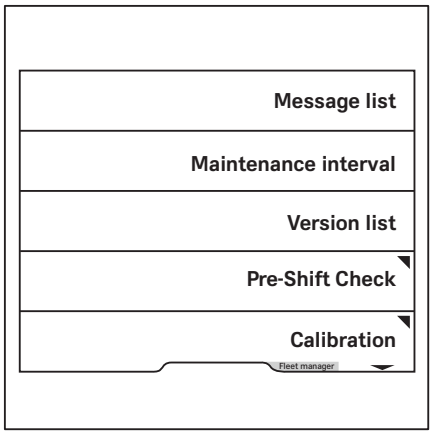

The `Pre-Shift Check` menu appears. ▷

– Press the `History` softkey.

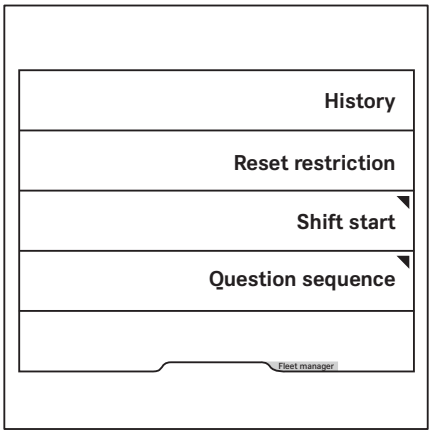

The Pre-Shift Check `results` display opens. ▷

This display shows all checks and questions that have been answered with the date and time.

To see more results, press the scroll buttons △ ▽.

– To go back to the previous menu, press the ☑ softkey.

– To access the main display, press the main display button ⌂.

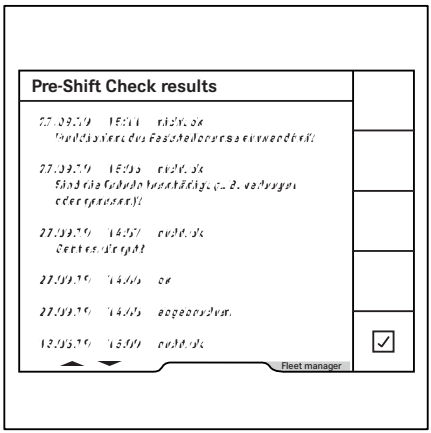

Defining the shift start

As a standard setting after commissioning, the Pre-Shift Check is always requested 24 hours after the last check was performed. The fleet manager can define up to three shifts and their start times. The Pre-Shift Check is then always requested at this time.

NOTE

If the truck is equipped with the "FleetManager" variant, the shifts are defined on the FleetManager interface. See the relevant operating instructions.

– Activate the "Access authorisation for the fleet manager".

– Press the `Service` softkey. ▷

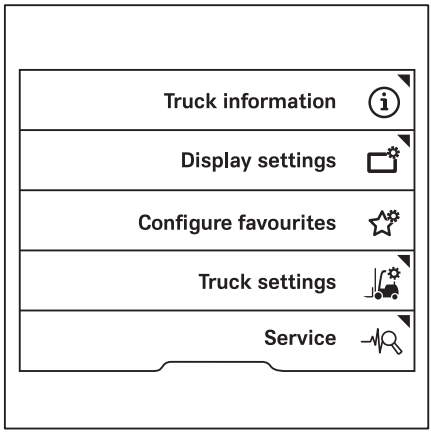

– Press the scroll keys △ ▽ until the `Pre-Shift Check` menu appears.

– Press the `Pre-Shift Check` softkey. ▷

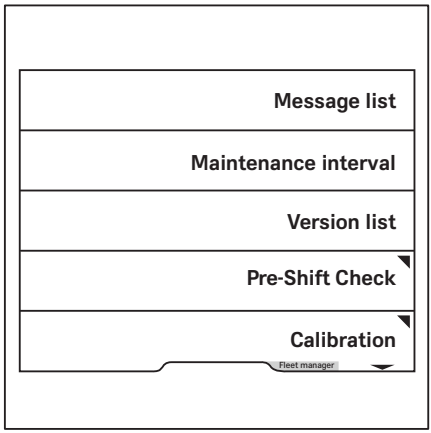

The `Pre-Shift Check` menu appears. ▷

– Press the `Shift start` softkey.

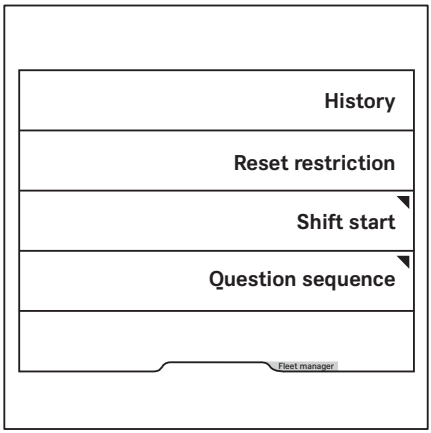

In this menu, you can call up the shift to be defined and its start time. ▷

The orange activation bar indicates which shifts are activated.

– To edit a shift, press the corresponding soft-key.

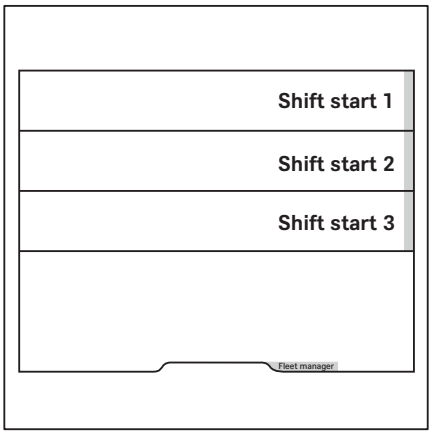

In this menu you can define the shift start. ▷

– Enter the time using softkeys `0 to 9`.

– To `save`, press the ☰ button.

The shift start is now defined. The Pre-Shift Check is always requested from this shift start time.

The display reverts to the previous menu.

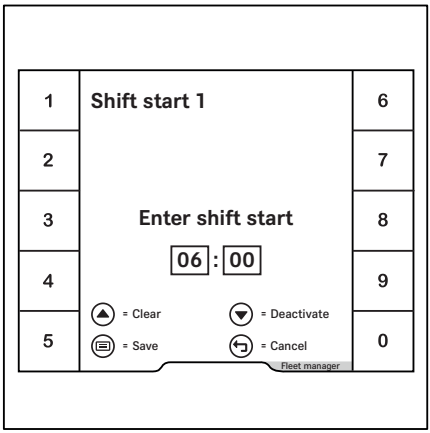

– To deactivate a certain shift start, select the relevant shift. ▷

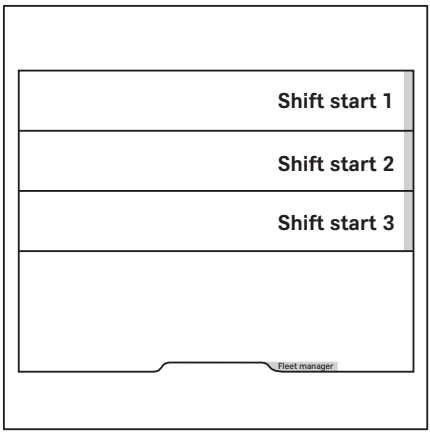

– Press the ▽ scroll button to deactivate the shift. ▷

– To confirm, press the button.

The time is shown in grey.

The shift is deactivated. The display reverts to the previous menu. There is no activation bar next to this shift.

– To `cancel`, press the back button.

– To access the main display, press the main display button.

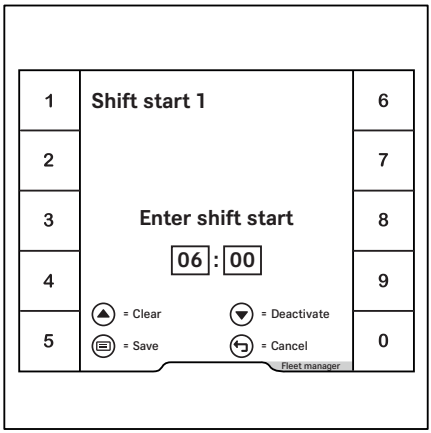

Resetting the truck restrictions

If truck functions are restricted due to checks with a bad result, the fleet manager can reset these restrictions. The fleet manager can also do this if a previously detected problem has been rectified.

– Activate the "Access authorisation for the fleet manager".

– Press the `Service` softkey. ▷

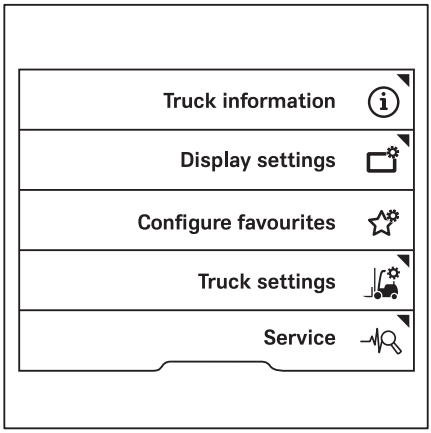

– Press the scroll keys △ ▽ until the `Pre-Shift Check` menu appears.
– Press the `Pre-Shift Check` softkey.

▷

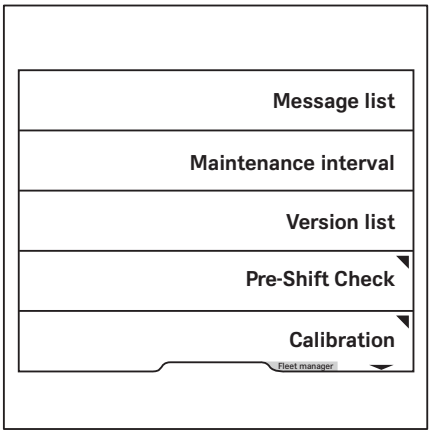

The `Pre-Shift Check` menu appears.
– Press the `Reset restriction` softkey.

▷

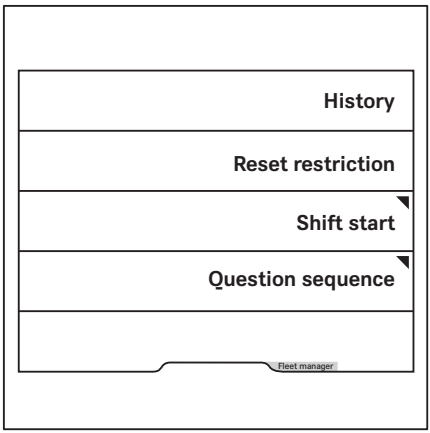

A question pops up asking if you want to reset the truck restrictions. ▷

– To confirm, press the ☑ softkey.

The full scope of the truck functions is now available. The display reverts to the previous menu.

– To cancel, press the ☒ softkey.

The truck functions remain restricted. The display reverts to the previous menu.

– To access the main display, press the main display button ⌂.

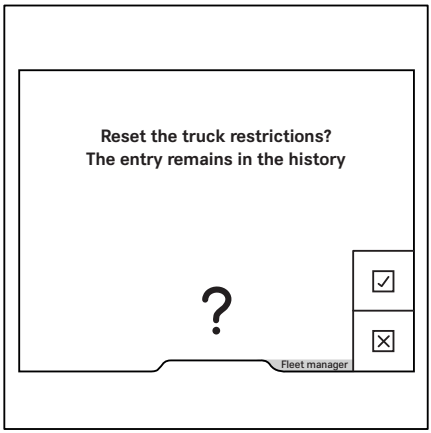

Driver profiles

Driver profiles (variant)

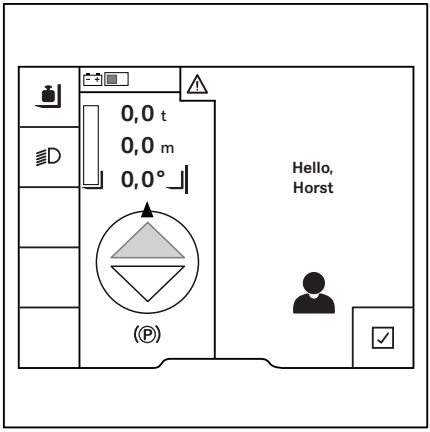

This variant allows up to ten individual driver profiles to be created. The driver is greeted with the selected name after logging in. Once the ✓ softkey is pressed, the main display appears.

If the truck is equipped with the "Access authorisation with PIN code" or "FleetManager" variants, these driver profiles can be linked to the relevant variant.

The driver profile allows the following settings to be saved:

- Language
- Favourites
- Configuration of the status line
- Configuration of drive programmes A and B

In addition, the operating statuses saved for the last selected driver profile are called up again the next time a user logs in with this driver profile:

- Selected drive programme 1 to 3
- Load dynamics
- Efficiency and drive modes (Blue-Q/sprint mode)

If a driver without an existing driver profile logs in using the "Access authorisation with PIN code" or "FleetManager" variants, a driver profile is generated. This driver profile corresponds to the settings when the truck was delivered.

If the truck is not equipped with these variants, drivers must select their profiles manually.

Any changes that drivers make to the settings while they are logged in are saved. These will then be available the next time that the driver logs in.

Selecting driver profiles

If the truck is equipped with the "Access authorisation with PIN code" or "FleetManager" variants, the corresponding driver profile is active after logging in. If the truck is not equip-

ped with these variants, drivers must select their profiles manually.

NOTE

Access to the settings menu is only available if the truck is at a standstill and the parking brake is applied. If the parking brake is released prematurely, the settings menu will close.

– Stop the truck.

– Apply the parking brake.

– Press the button.

– Press the softkey.

– Press the `Driver profiles` softkey .

▷

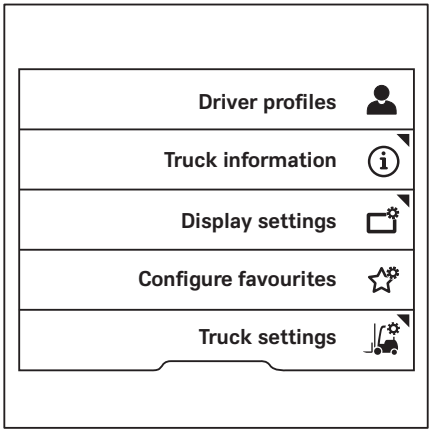

The orange activation bar displays the current selection.

– Press the softkey for the required driver profile.

The driver profile is active. The driver is greeted with the selected name the next time that the truck is switched on.

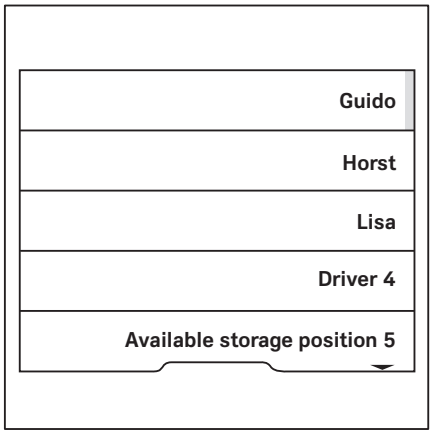

Creating driver profiles

Both the fleet manager and the driver can create up to ten driver profiles.

NOTE

If the truck is equipped with the "Access authorisation with PIN code" or "FleetManager" variants, the driver profile is generated automatically when logging in for the first time.

– Apply the parking brake.

– Press the button.

– Press the softkey.

– Press the `Driver profiles` softkey .

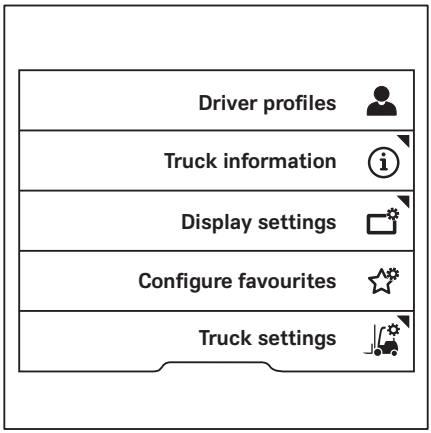

This menu provides storage space for saving ten driver profiles.

– Press the softkey for the required storage location.

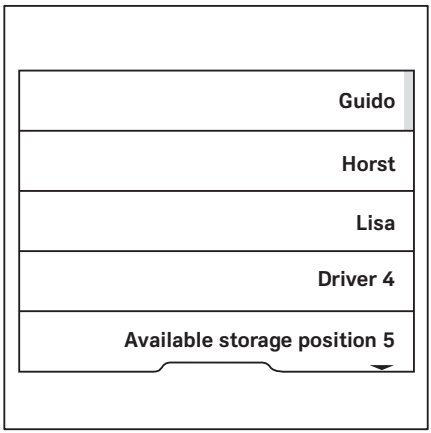

NOTE

Unoccupied storage locations that do not contain a driver profile are indicated by `Available storage position`.

The `Driver name` menu is displayed. ▷

– Use the softkeys to enter the desired name.

– To confirm, press the button.

The driver profile is active. The driver is greeted with the selected name after the next log-in.

Any changes that drivers make to the settings while they are logged in are saved. These will then be available the next time that the driver logs in.

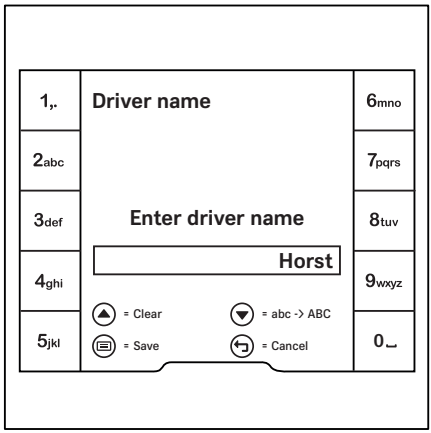

Renaming driver profiles

Driver profiles can be renamed. Drivers can only rename their own driver profile. The fleet manager has access authorisation to rename all driver profiles.

Renaming by the driver

– Apply the parking brake.

– Press the button.

– Press the softkey.

– Press the `Truck settings` softkey.

– Press the `Rename driver profiles` ▷ softkey.

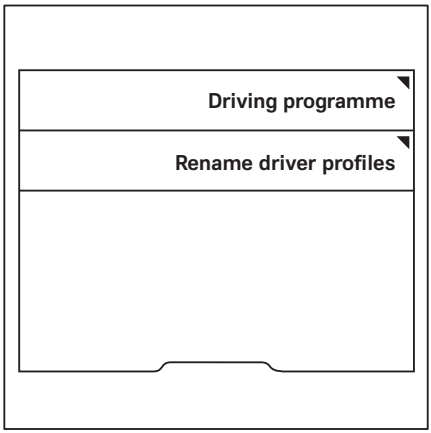

The `Driver name` menu is displayed. ▷

– Use the softkeys to enter the desired name.

– To confirm, press the button.

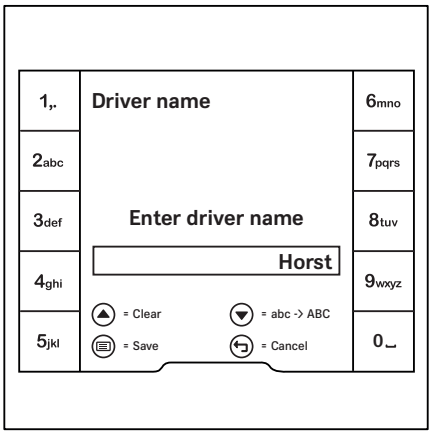

Renaming by the fleet manager

– Activate the "Access authorisation for the fleet manager".

– Press the `Truck settings` softkey.

– Press the `Manage driver profiles` softkey. ▷

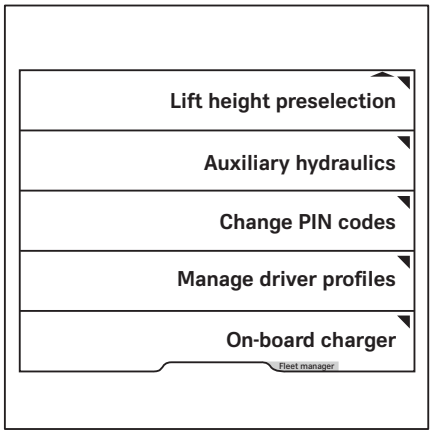

– Press the `Rename driver profiles` softkey. ▷

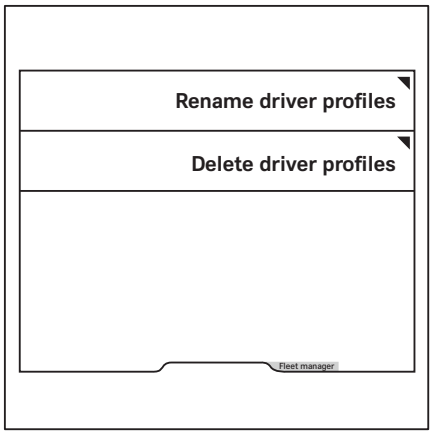

The `Driver name` menu is displayed. ▷

– Use the softkeys to enter the desired name.

– To confirm, press the button.

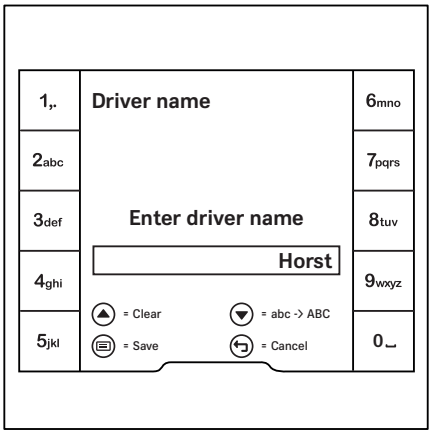

Deleting driver profiles

The fleet manager has access authorisation to delete driver profiles.

– Activate the "Access authorisation for the fleet manager".

– Press the `Truck settings` softkey .

– Press the `Manage driver profiles` softkey. ▷

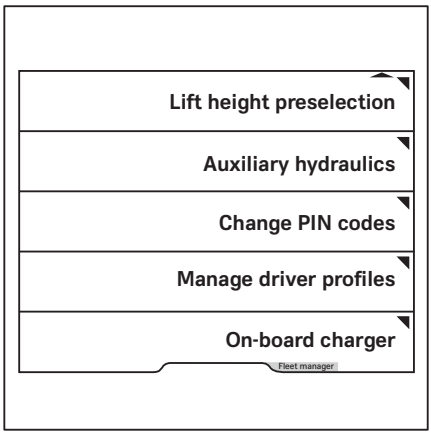

– Press the `Delete driver profiles` ▷ softkey.

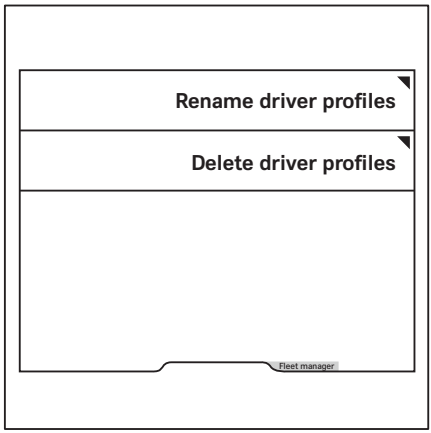

– Press the softkey for the driver profile to be ▷ deleted.

The driver profile is deleted.

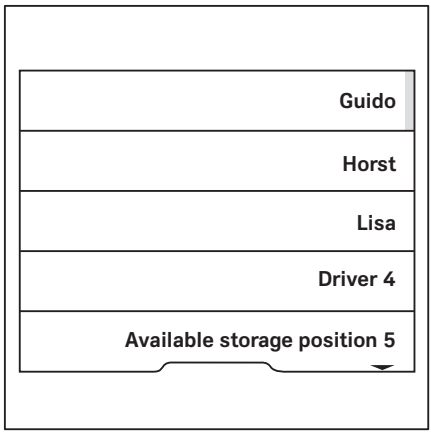

Switching on and starting

Engine preheating (variant)

Function

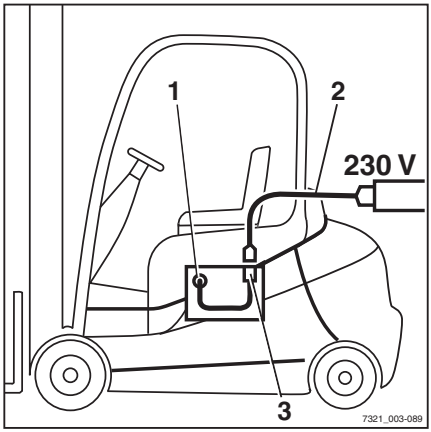

At ambient temperatures below the freezing point, a preheated engine is easier to start. The starter battery is protected. The engine consumes less fuel.

In trucks with the engine preheating function, a heating element (1) that is connected to a built-in plug (3) in the engine compartment is located in the cooling system of the internal combustion engine.

Connecting the connecting cable (2) (230V) switches on the heating element. The activated heating element heats the coolant. The preheating time depends on the ambient temperature. The preheating time is at least 2 hours.

Engine preheating can be safely used continuously. Temperature control prevents the coolant temperature from exceeding 58°C.

Engine preheating

⚠ CAUTION

Overheating can damage the heating element!

Contaminants such as dirt, ice, air or radiator sealing compound, or insufficient coolant in the cooling system, can cause the heating element to overheat.

– Check the coolant level.
– If there are contaminants in the cooling system, do not preheat the engine.

⚠ DANGER

Danger to life from electric shock!

– Use only marked connecting cables (2) in accordance with CEE IP67, 3 x 1.5 mm^2.
– Connect the connecting cable only to an earthed 230V socket.

– Plug the connecting cable (2) into the built-in socket (3).

– Plug the connecting plug (4) into an earthed 230V socket.

– Preheat the engine for at least 2 hours.

The preheating time may be longer than this depending on the ambient temperature. During preheating, a quiet bubbling sound may be heard.

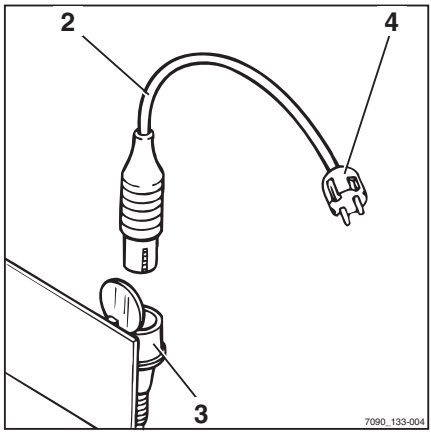

⚠ CAUTION

Risk of damage to the connecting cable!

– Before starting the engine, remove the connecting cable from the 230V socket and from the built-in socket.

– Start the engine.

Opening the LPG cylinder valve

⚠ DANGER

There is a risk of explosion if LPG escapes.

Escaping LPG may explode when exposed to ignition sources and cause serious accidents.

– Do not smoke or use a naked flame/ lighter.

– Do not start the engine.

– Close the cylinder valve.

– Notify your authorised service centre.

– LPG cylinders should be opened in well-ventilated spaces, away from openings in the ground.

⚠ DANGER

Risk of explosion from spark discharge!

– Do not use a striking tool when opening and closing.

⚠ WARNING

LPG can cause frostbite on the skin.

– Wear protective gloves.

⚠ CAUTION

Opening the cylinder valve too quickly can lead to the system icing over.

– Open the cylinder valve slowly.

– Open the cylinder valve (1) by slowly turning the star-grip handle anti-clockwise. ▷

– Check whether the smell of gas is evident.

– Check whether the hose (2) is securely connected to the gas cylinder.

– Check to see whether the hose and connection screw joints have iced over.

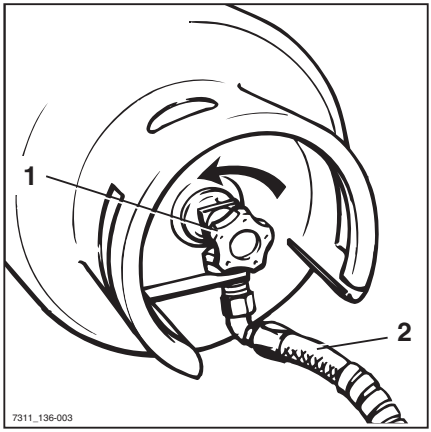

Opening the LPG cylinder valve for a double-cylinder holder

⚠ DANGER

There is a risk of explosion if LPG escapes.

Escaping LPG may explode when exposed to ignition sources and cause serious accidents.

– Do not smoke or use a naked flame/ lighter.

– Do not start the engine.

– Close the cylinder valve.

– Notify your authorised service centre.

– LPG cylinders should be opened in well-ventilated spaces, away from openings in the ground.

⚠ DANGER

Risk of explosion from spark discharge!

– Do not use a striking tool when opening and closing.

⚠ WARNING

LPG can cause frostbite on the skin!

– Wear protective gloves.

⚠ CAUTION

Opening the cylinder valve too quickly can lead to the system icing over.

– Open the cylinder valve slowly.

– To open the upper gas cylinder (1), push the lever (2) down.

– Open the cylinder valve (3) of the upper gas cylinder by slowly turning the star-grip handle anti-clockwise.

– Check the cylinder valve (4) of the lower gas cylinder.

The valve must be closed.

– If necessary, close the valve of the lower gas cylinder by turning it clockwise.

▷

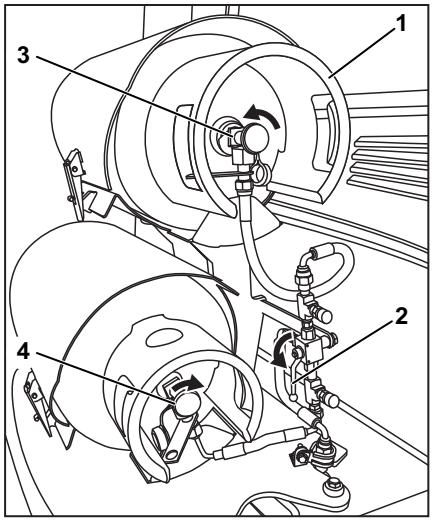

– To open the lower gas cylinder (1), push the lever (2) up. ▷
– Open the cylinder valve (3) of the lower gas cylinder by slowly turning the star-grip handle anti-clockwise.
– Check the cylinder valve (4) of the upper gas cylinder.

The valve must be closed.

– If necessary, close the valve of the upper gas cylinder by turning it clockwise.
– Check whether the smell of gas is evident.
– Check whether the hose is securely connected to the gas cylinder.
– Check to see whether the hose and connection screw joints have iced over.

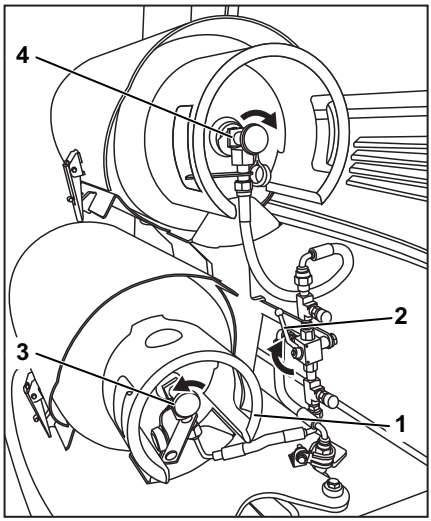

Opening the shut-off valve of an LPG tank (variant)

⚠ DANGER

There is a risk of explosion if LPG escapes.

Escaping LPG may explode when exposed to ignition sources and cause serious accidents#.

– Do not smoke or use a naked flame/ lighter.
– Do not start the engine.
– Close the shut-off valve.
– Notify your authorised service centre.
– Only open the shut-off valve in well-ventilated rooms and not near openings in the ground.

⚠ DANGER

Risk of explosion from spark discharge!

– Do not use any striking tools when opening and closing.

⚠ WARNING

LPG can cause frostbite on the skin.

– Always wear protective gloves.

⚠ CAUTION

Opening quickly can lead to the system icing over.

– Slowly open the shut-off valve.

– Open the shut-off valve (2) by slowly turning the valve anti-clockwise. ▷

– Check whether it smells of gas.

– Check whether the hose (1) is securely connected to the LPG tank.

– Check to see whether the hose and connection screw joints have iced over.

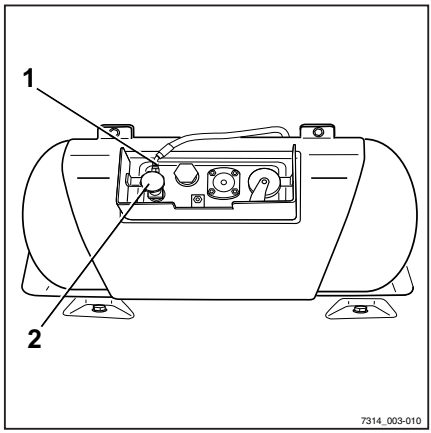

The fill level display (4) on the LPG container displays how much LPG is available. ▷

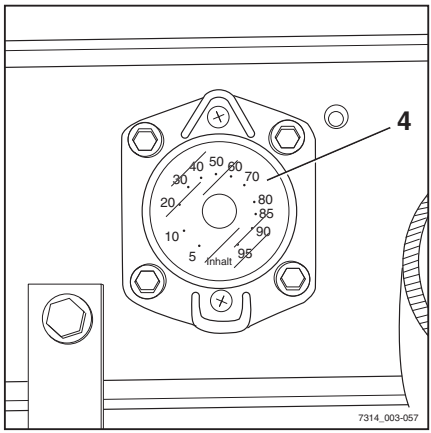

Switching on the key switch

⚠ WARNING

Before switching on the key switch, all visual inspections and function checking must be carried out without any defects being identified.

- Perform the visual inspections and function checking.
- **Do not** operate the truck if defects have been detected; contact the authorised service centre.

- Insert the switch key (1) into the key switch and turn it to the "I" position. ▷

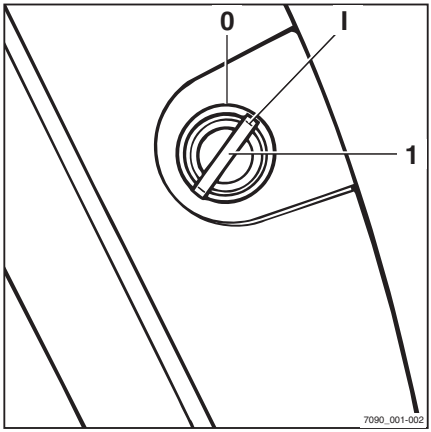

NOTE

If the truck is equipped with the "Access authorisation with PIN code" variant, the display initially changes to the input menu for access authorisation.

Once the truck is ready for operation, the main screen is shown on the display.

Main screen ▷

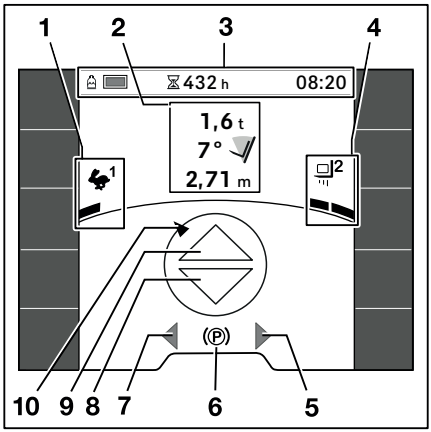

1 Selected drive programme with driving dynamics display
2 Load information (variants)
3 Status bar[1]: fuel level, operating hours, time
4 Selected load dynamics programme with dynamics bar
5 "Right" turn indicator display
6 Driving speed or parking brake (Ⓟ)
7 "Left" turn indicator display
8 "Reverse" drive direction indicator
9 "Forward" drive direction indicator
10 Steering angle display

Additional information may appear on the display.

[1] An example status bar (3) is shown in this figure.

– Refer to the chapter entitled "Display messages".

Access authorisation with PIN code (variant)

Trucks equipped with the "Access authorisation with PIN code" variant are protected against unauthorised use by a PIN code. So that the same truck can be used by different drivers, individual PIN codes can be specified.

An initial PIN code of "11111" is preset at the factory for the first use.

NOTE

We recommend that the fleet manager changes this PIN code using their access authorisation. See also the section entitled "Access authorisation for the fleet manager (variant)".

When the key switch is switched on, the `Access authorisation` input menu appears.

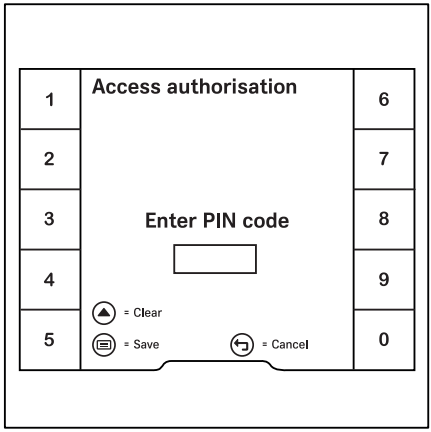

All hydraulic functions and drive functions of the truck are blocked. In the StVZO (German Road Traffic Licensing Regulations) variant, the function of the hazard warning system (variant) is guaranteed.

– To activate the blocked functions, use the softkeys to enter the PIN code.

– To confirm, push the ☰ button.

If the input was correct, the display changes to the main display. The truck is ready for use.

– If the input was incorrect, enter the PIN code again.

NOTE

The authorised service centre can configure access authorisation so that the PIN code has to be re-entered each time after someone leaves the truck.

When the driver's seat is occupied again, the message `Log in` 🔒 appears. The display

then changes to the "Access authorisation" input menu.

Changing the PIN codes

The fleet manager can change the PIN codes. See also the following section entitled "Access authorisation for the fleet manager (variant)".

– Activate the "Access authorisation for the fleet manager".

– Press the `Service` softkey. ▷

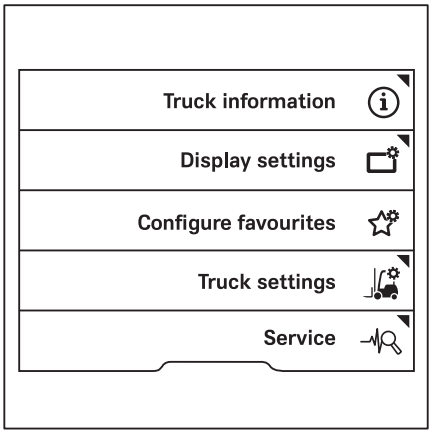

– Press the scroll keys △ ▽ until the `Change PIN codes` menu appears. ▷

– Press the `Change PIN codes` softkey.

– Follow the instructions on the display.

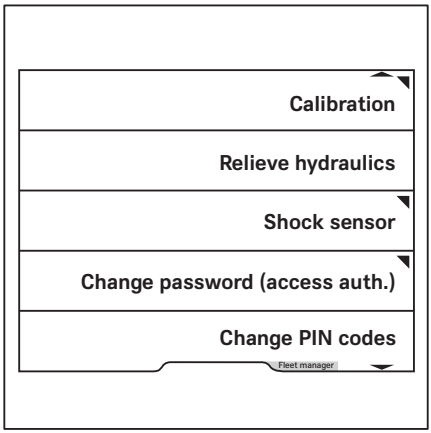

Access authorisation for the fleet manager (variant)

Trucks equipped with the "Access authorisation for the fleet manager" variant can be configured by the users themselves. Access to these settings is protected by a fleet manager password.

Three options are available for the "Access authorisation for the fleet manager" variant:

1 **No fleet manager password**
Access to the configuration menus is not enabled. If access is required at a later date, the authorised service centre must set up a fleet manager password.

2 **Standard fleet manager password**
The standard fleet manager password is "1111".
For safety reasons, this standard fleet manager password must be changed after the first use. See also the section entitled "Changing the fleet manager password".

3 **Individual fleet manager password**
The individual fleet manager password is noted on the order confirmation and on the truck invoice.

NOTE

Access to the settings menu is only available if the truck is at a standstill and the parking brake is applied. If the parking brake is released prematurely, the settings menu will close.

– Stop the truck.

– Apply the parking brake.

– Press the button.

– Press the softkey.

The first menu level appears.

– Press the `Access authorisation` softkey 🔑.

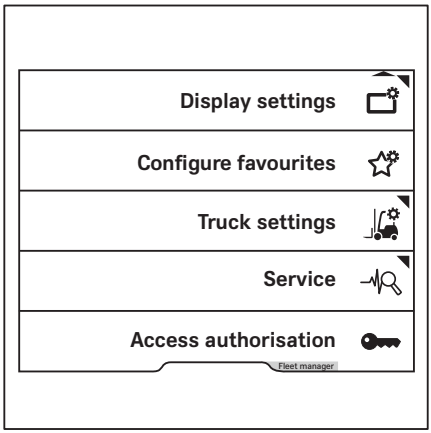

The display changes to the `Access authorisation` menu.

– Enter the fleet manager password using the softkeys.

– To confirm, press the ☰ button.

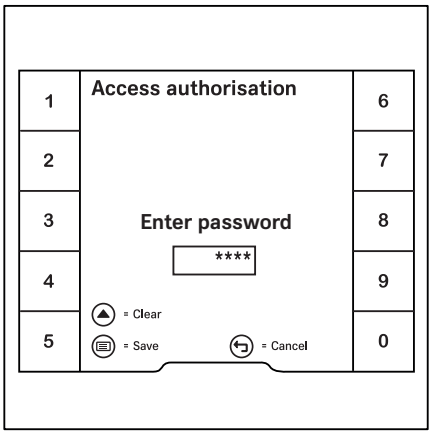

The message `Fleet manager access authorisation granted` ✓ appears. ▷

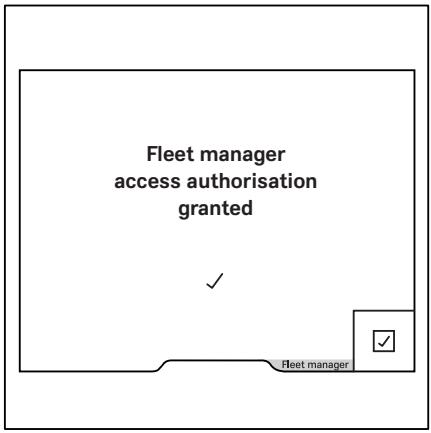

– To confirm, press the ✓ softkey.

The display returns to the settings menu.

If the password entered was incorrect, the message `Password incorrect` is displayed.

– If this happens, enter the password again.

NOTE

While the "Access authorisation for the fleet manager" is activated, `Fleet manager` *is displayed in an orange bar at the bottom of the screen. When the users switches to the main display, the access authorisation expires again.*

Changing the fleet manager password

– Activate the "Access authorisation for the fleet manager".

– Press the `Service` softkey. ▷

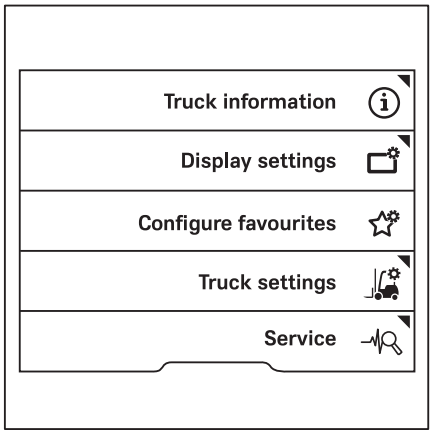

– Press the scroll buttons △ ▽ until the `Change password (access auth.)` menu appears.
– Press the `Change password (access auth.)` softkey.
– Follow the instructions on the display.

▷

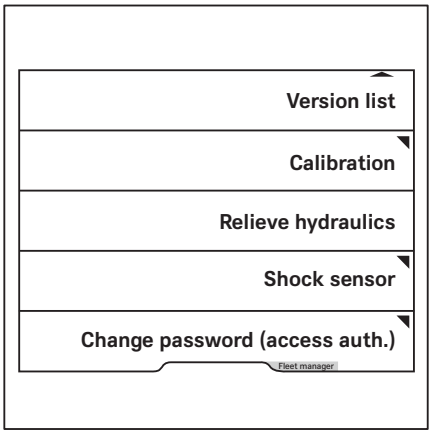

Starting the engine

⚠ DANGER

Risk to health from exhaust gases!

It is dangerous to leave the engine running in enclosed spaces. The engine consumes oxygen and emits carbon dioxide, carbon monoxide and other poisonous gases.

– Observe the national laws and regulations when using trucks with an internal combustion engine in entirely or partially enclosed working areas.
– Always ensure that there is sufficient ventilation available.

– Apply the parking brake.

– Insert the switch key (1) into the key switch and turn to position "I". ▷

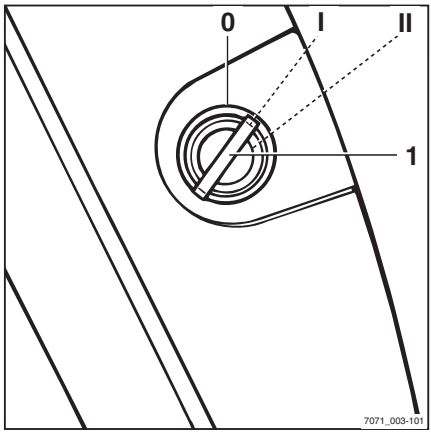

If the truck controller is powered up, the message "Start" appears on the display. ▷

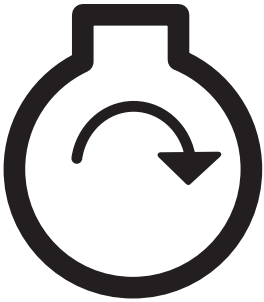

NOTE

The engine will not start until the truck controller is powered up.

– Turn the switch key to position "II" and hold it there until the engine starts.

If the engine starts:

– Release the switch key.

If the engine does not start:

– Stop the starting procedure, wait for a while and then repeat the starting procedure.

To protect the starter battery, wait at least one minute between each starting procedure. If the engine still does not start after the third start attempt, notify the authorised service centre.

⚠ DANGER

There is a risk of explosion if LPG leaks out in an uncontrolled manner!

In the event of any malfunctions or starting problems with the engine, have the gas system checked by a competent person.

⚠ CAUTION

Danger of engine damage!

If an error message appears on the display after the engine has been started, the engine lubrication may be insufficient. Insufficient lubrication may cause engine damage.

– Stop the engine immediately.
– Check the engine oil level and top up if necessary.
– If the message continues to appear, notify the authorised service centre.

– Observe the notes in the chapter entitled "Malfunctions".

NOTE

If the engine does not start due to a discharged battery, charge the battery or jump-start the engine.

Lighting

Retrofitting lighting equipment

NOTE

All of the lighting equipment described below can be retrofitted by the authorised service centre.

– Contact the authorised service centre with regard to this matter.

Meaning of the symbols ▷

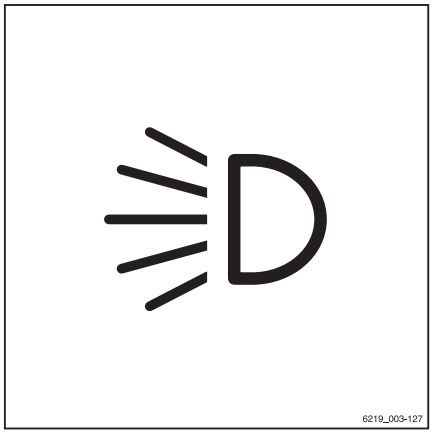

Individual lighting devices are switched on and off using the "Lighting" sub-menu.

– To access this sub-menu, push the button ☰.

Symbols for the lighting and their meanings

	Parking light
	Headlights
	Hazard warning system[2]
	Rotating beacon
	STILL SafetyLight
	Warning zone light
	Front working spotlights
	Rear working spotlights
	Roof working spotlights

Only the symbols of the lighting devices that are installed in the truck can be selected. When one of the lighting devices is switched on, the activation bar next to the relevant symbol lights up orange.

NOTE

If the truck is equipped with the "StVZO" (German Road Traffic Licensing Regulations) variant, the hazard warning system works even when the truck is switched off.

2 This function is not available if the truck is equipped with the "StVZO" (German Road Traffic Licensing Regulations) variant. In this case, the hazard warning system is switched on and off via the hazard warning button on the steering column. For more information, refer to the section entitled "Hazard warning system".

Driving lights

– To switch on the parking light (1), push the associated Softkey on the display-operating unit.

The front side lights and the tail lights light up.

– To switch on the driving light (2), press the associated Softkey on the display-operating unit.

The headlights and tail lights light up. If the truck has StVZO (German Road Traffic Licensing Regulations) equipment (variant) and a licence plate lamp, then this also lights up.

– To switch off the driving light (2), press the Softkey again.

The driving light and licence plate lamp go out.

– To switch off the parking light (1), push the Softkey again.

The front side lights and the tail lights go out.

If the truck does not have StVZO (German Road Traffic Licensing Regulations) equipment (variant), then the parking light and driving light can be switched on and off independently of each other.

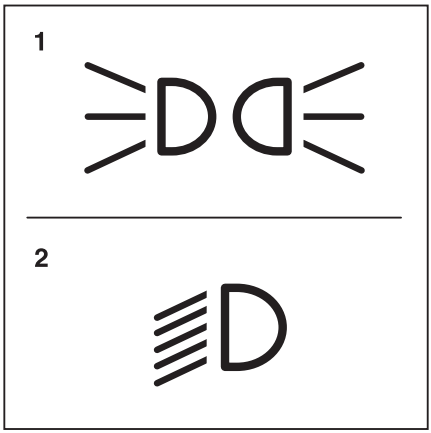

1 Parking light
2 Driving light

Working spotlights

Front and rear working spotlights

– To switch on the front working spotlights (3), push the associated Softkey on the display-operating unit.

The front working spotlights light up.

– To switch off the front working spotlights (3), push the Softkey again.

The front working spotlights go out.

– To switch on the rear working spotlights (4), push the associated Softkey on the display-operating unit.

The rear working spotlights light up.

– To switch off the rear working spotlights (4), push the Softkey again.

The rear working spotlights go out.

NOTE

For the StVZO (German Road Traffic Licensing Regulations) variant, the parking light is also switched on when the working spotlights are switched on. The licence plate lamp (if present) is also switched on when the forward-facing working spotlights are switched on.

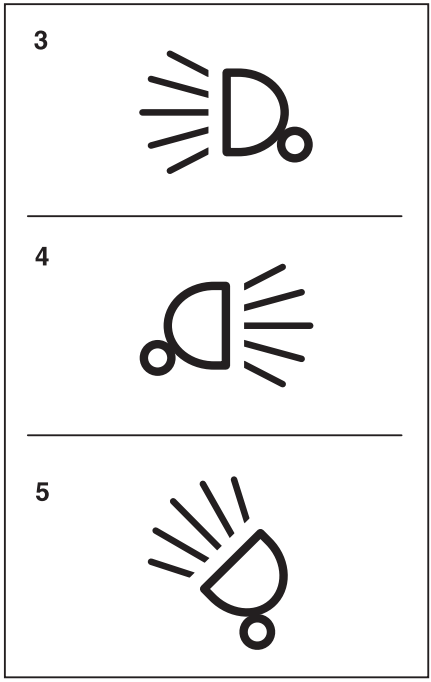

3 Front working spotlights
4 Rear working spotlights
5 Roof spotlights

Working spotlights on the roof and the side of the lift mast

The roof spotlights light up the working area when the fork carriage is raised.

– To switch on the roof spotlights (5), push the associated Softkey on the display-operating unit.

The roof spotlights (5) light up.

– To switch off the roof spotlights (5), push the Softkey again.

The roof spotlights (5) go out.

NOTE

Depending on the configuration, the roof spotlights automatically switch on when the fork carriage is raised.

Working spotlight for reverse travel (variant)

In this equipment variant, a working spotlight for reverse travel is fitted on the rear of the overhead guard and provides optimum illumination of the roadway during reverse travel.

– Press the softkey.

The activation bar next to the symbol lights up. The working spotlight does not yet light up.

– Set the drive direction to "Reverse".

The working spotlight for reverse travel lights up.

If the drive direction is set to "Forward", the working spotlight goes out.

Turn indicators

The turn indicators are switched on and off via the travel direction selector and indicator module.

▷

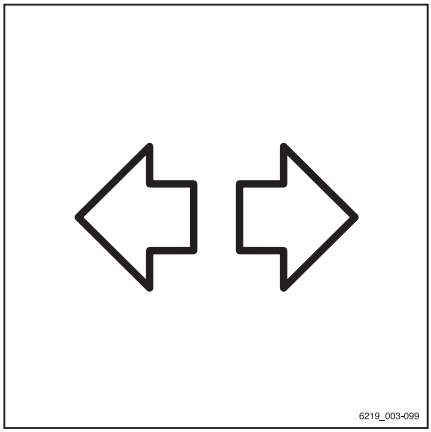

– To switch on the left or right turn indicator, move the lever (1) to the desired direction. ▷

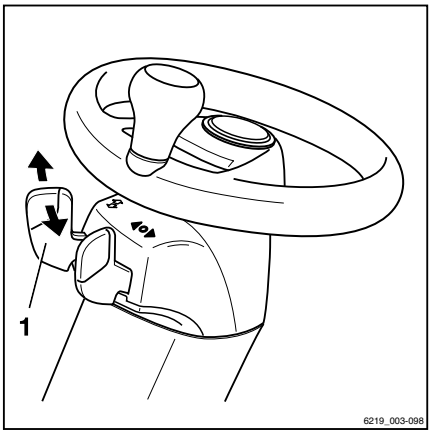

The turn indicators and the turn indicator display (2) or (3) on the display-operating unit flash. ▷

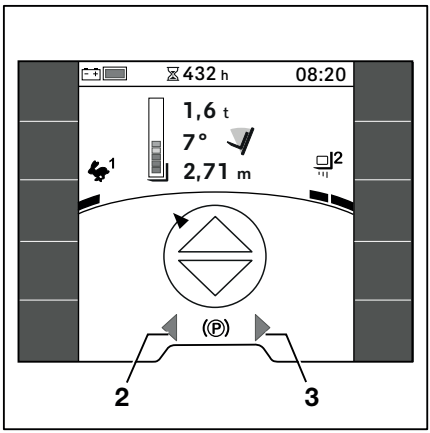

– To switch off the turn indicators, push the lever (1) back to the centre position.

All turn indicators and the turn indicator displays on the display/operating unit stop flashing.

Hazard warning system

Switching the hazard warning system on and off is different for trucks with and without the StVZO (German Road Traffic Licensing Regulations) variant.

– To switch on the hazard warning system, push the associated Softkey on the display-operating unit.

All direction indicators and the turn indicator displays on the display-operating unit flash.

– To switch off the hazard warning system, push the Softkey again.

All direction indicators and the turn indicator displays on the display-operating unit stop flashing.

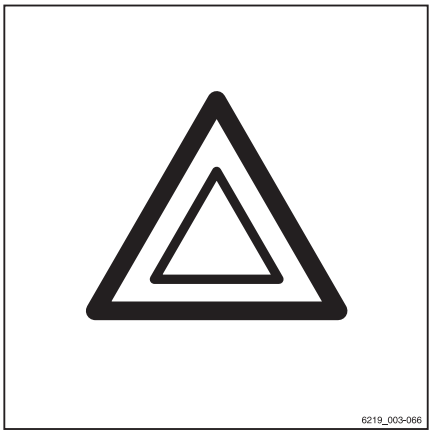

Specific features of the StVZO (German Road Traffic Licensing Regulations) variant

For the StVZO (German Road Traffic Licensing Regulations) variant, the hazard warning system cannot be switched on and off via the display/operating unit. It is switched on and off using the hazard warning button on the steering column. The hazard warning system in this variant works even when the truck is switched off.

– To switch on the hazard warning system, push the hazard warning button (1).

All direction indicators and the turn indicator displays on the display/operating unit flash.

– To switch off the hazard warning system, push the hazard warning button (1) again.

All direction indicators and the turn indicator displays on the display-operating unit stop flashing.

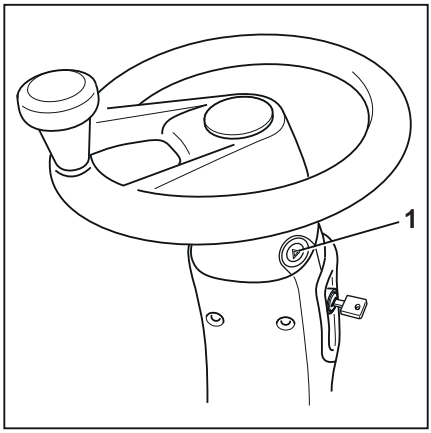

StVZO equipment

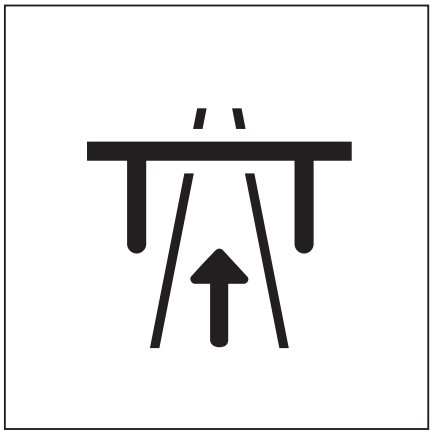

If the truck is fitted with StVZO (German Road Traffic Licensing Regulations) equipment, the softkey is stored in the favourites bar. This softkey is used to switch off all lighting devices that are not permitted on roads subject to German traffic regulations (StVO).

This relates to the following variants of lighting equipment:

- STILL SafetyLight and STILL SafetyLight 4Plus
- Warning zone light and warning zone light plus
- Working spotlight
- Rotating beacon

– To switch this lighting equipment off, press the softkey.

The orange activation bar lights up next to the softkey.

– To switch this lighting equipment on, press the softkey again.

The orange activation bar goes out.

NOTE

This function is configured for German traffic regulations (StVO) ex works.

- *Outside of Germany, observe the national regulations for the country of use.*
- *The authorised service centre can amend the function so that fewer lighting devices or more lighting devices are switched off.*

The softkey is also located in the `Driving` menu .

Rotating beacon

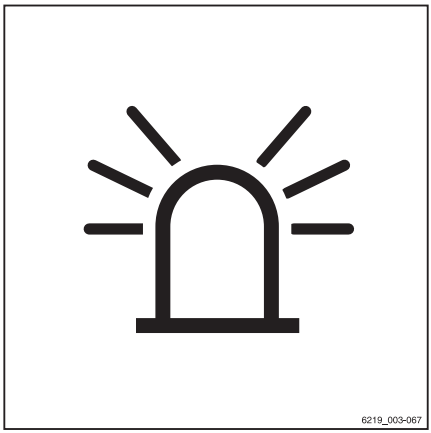

– To switch on the rotating beacon, push the associated Softkey on the display-operating unit.

The rotating beacon is switched on.

– To switch off the rotating beacon, push the Softkey again.

The rotating beacon goes out.

STILL SafetyLight® and STILL SafetyLight 4Plus® (variants)

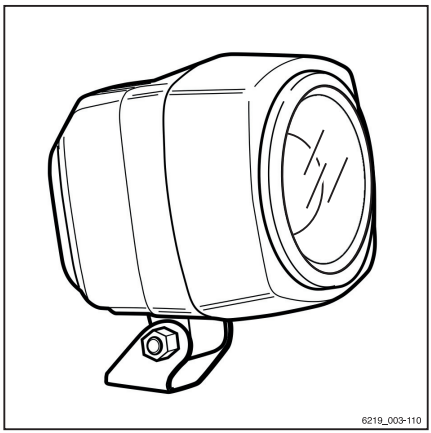

⚠ WARNING

Danger of damage to eyes from looking into the STILL SafetyLight® and STILL SafetyLight 4Plus®.

Do **not** look into the STILL SafetyLight® or STILL SafetyLight 4Plus®.

STILL SafetyLight® and STILL SafetyLight 4Plus® are visual warning units designed to enable early detection of trucks in driving areas with low visibility (such as drive lanes, high racks), as well as at blind junctions. The STILL SafetyLight® or STILL SafetyLight 4Plus® is mounted on a support on the overhead guard such that it is not affected by jolts and vibrations.

Depending on the version, the STILL SafetyLight® projects one or more light-blue light spots in front of or behind the truck and thus warns others about the approaching truck. With the STILL SafetyLight 4Plus®, several light blue light spots are projected as a chase light. The chase light indicates the location of the truck with its direction of travel.

Depending on the configuration of the truck, the STILL SafetyLight® or STILL Safety-Light 4Plus® automatically switches itself on when the truck is moving. This means that, during reverse travel (variant), for example, it can be used as an additional light for the working spotlight for reverse travel. The STILL SafetyLight® or the STILL Safety-Light 4Plus® can also be switched on and off on the display-operating unit.

– To do so, press the softkey.

NOTE

If the truck is to be operated on public roads, the STILL SafetyLight® and the STILL Safety-Light 4Plus® must be switched off.

Blue-Q efficiency mode

Functional description

The Blue-Q efficiency mode affects both the drive unit and the activation of the additional consumers and reduces the truck's energy consumption.

If the efficiency mode has been activated, the acceleration behaviour of the truck changes to make acceleration more moderate.

When travelling at low speeds, normally when manoeuvring, no reduction is noticeable despite the activated efficiency mode. For moderate speeds of at least approx. 7 km/h, acceleration is gentler. Therefore, on distances of up to approx. 40 m, lower speeds are reached than would be the case if the efficiency mode was not activated. The maximum speed is 18 km/h, compared to a maximum speed of 21 km/h in the mode STILL-Classic.

To reduce fuel consumption and noise volume, Blue-Q lowers the number of revolutions of the internal combustion engine in drive mode.

Blue-Q has no influence on:

- Climbing capability
- Pulling force
- Braking characteristics

NOTE

If no other energy mode is selected, STILL-Classic is automatically active. No pictogram is displayed for STILL-Classic.

Switching Blue-Q on and off

– To switch on Blue-Q efficiency mode, push the softkey .

The Blue-Q symbol appears on the display/operating unit and Blue-Q efficiency mode is switched on.

– To switch off Blue-Q efficiency mode, push the associated softkey again.

The Blue-Q symbol disappears and Blue-Q efficiency mode is switched off.

NOTE

The fleet manager can also use his access authorisation to activate Blue-Q efficiency mode permanently. See the next section.

Switching off additional consumers

If the Blue-Q efficiency mode is activated, the controller switches off various additional consumers after a few seconds in certain conditions. The additional consumers available depend on the truck equipment. The following table shows the conditions that cause additional consumers to be switched off. Only one of the conditions listed must be met.

Additional consumers	Condition		
	Seat switch not actuated	Truck stopped	Truck is in motion
Front working spotlights	X	X	Backwards > 3 km/h
Rear working spotlights	X	X	Forwards
Top double working spotlight	X	X	> 3 km/h
Headlights	X	X	-
Front wiper	X	X	Backwards > 3 km/h
Rear wiper	X	X	Forwards
Seat heater	X	-	-
Cab heating	X	-	-

NOTE

On the version with StVZO (German Road Traffic Licensing Regulations) equipment, the Blue-Q efficiency mode does not switch off the lighting devices headlights and working spotlights, side lights, rear lights and license plate lamps.

STILL Classic and sprint mode ▷

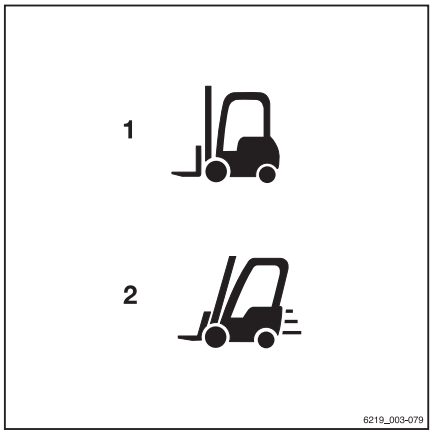

Drive modes influence the driving performance and the lifting performance of the electric drive.

Two different drive modes are available:

1 **STILL Classic**
This mode is active after the truck has been switched on. This mode is the default setting and provides a balance between hydraulic functions and driving functions. The maximum speed is 18 km/h. No symbol is shown on the display.

2 **Sprint mode**
In sprint mode, the truck accelerates more quickly to a maximum speed of 21 km/h. Sprint mode is for driving on clear and spacious terrain.

NOTE

If sprint mode is used, the drive units heat up more quickly.

Switching sprint mode on and off

– To switch on sprint mode, push the associated Softkey.

The "sprint mode" symbol (2) appears on the display of the display-operating unit. Sprint mode is switched on.

– To switch off the mode, push the Softkey again.

The symbol disappears and the mode is switched off. The truck is then back in STILL Classic mode.

Automatic switch off for sprint mode

If the truck is operated in sprint mode at the maximum performance level, the truck will consume more energy. This means that both the drive units and the energy supply may get too hot.

The temperatures of the drive units and the energy supply are monitored continuously. If an excessively high temperature occurs, sprint mode is automatically deactivated.

Blue-Q efficiency mode

If the truck is automatically switched off, sprint mode can then only be switched on again if the following conditions are met:

- The temperatures of the drive units and the energy supply are not too high
- The truck has been restarted.

Driving

Safety regulations when driving

Driving conduct

The driver must follow the public rules of the road when driving in company traffic.

The speed must be appropriate to the local conditions.

For example, the driver must drive slowly around corners, in tight passageways, when driving through swing-doors, at blind spots, or on uneven surfaces.

The driver must always maintain a safe braking distance from vehicles and persons in front, and must always have the truck under control. Stopping suddenly, turning quickly and overtaking at dangerous or blind spots must be avoided.

– Initial driving practice must be carried out in an empty space or on a clear roadway.

The following are forbidden during driving:

- Allowing arms and legs to hang outside the truck
- Leaning the body over the outer contour of the truck
- Climbing out of the truck
- Moving the driver's seat
- Adjusting the steering column
- Releasing the seat belt
- Disabling the restraint system
- Raising the load higher than 300 mm above the ground (with the exception of manoeuvring processes during the placement into stock/removal from stock of loads)
- Using electronic devices, for example radios, mobile phones etc.

⚠ WARNING

The use of multimedia and communication equipment as well as playing these devices at an excessive volume during travel or when handling loads can affect the operator's attention. There is a risk of accident!

– Do not use devices during travel or when handling loads.

– Set the volume so that warning signals can still be heard.

⚠ WARNING

In areas where use of mobile phones is prohibited, use of a mobile phone or radio telephone is not permitted.

– Switch off the devices.

Visibility when driving

The driver must look in the drive direction and have a sufficient view of the driving lane.

Particularly for reverse travel, the driver must be sure that the driving lane is clear.

When transporting goods that impair visibility, the driver must drive the truck in reverse.

If this is not possible, a second person acting as a guide must walk in front of the truck.

In this case the driver must only move at walking pace and with extra care. The truck must be stopped immediately if eye contact with the guide is lost.

Rear-view mirrors are only to be used for observing the road area behind the truck and not for reverse travel. If visual aids (mirror, monitor) are necessary to achieve sufficient visibility, it is necessary to practise using them. For reverse travel using visual aids, extra care should be taken.

When using attachments, special conditions apply; see the chapter entitled "Fitting attachments".

Any glass (variant, e.g. windscreen) and mirrors must always be clean and free of ice.

Roadways

Dimensions of roadways and aisle widths

To ensure safe manoeuvring, the following dimensions and aisle widths apply under specified conditions. In individual cases, check to determine whether a larger aisle width is necessary, e.g. in the case of load dimensions, attachments or lift masts that deviate from the standard configuration.

In the European Union, Directive 89/654/EEC concerning the "minimum safety and health requirements for the workplace" applies. Outside the European Union, the respective national regulations apply.

The required aisle widths depend on the dimensions of the load.

For pallets, these are:

Model	Type	Aisle width [mm]	
		With pallet 1000x1200 crosswise	With pallet 800x1200 lengthwise
RX70-20/600	7400	3963	4163
RX70-25	7401	3963	4163
RX70-25/600	7402	4047	4247
RX70-30	7403	4060	4260
RX70-30/600	7404	4127	4352
RX70-35	7405	4127	4327

The truck must be used only on roadways that do not have excessively sharp curves, excessively steep gradients or excessively narrow or low entrances.

Driving on gradients

⚠ WARNING

Driving up and down longer gradients can cause the drive unit to overheat and switch off.

Driving up and down longer gradients greater than 15% is not permitted due to the minimum specified braking values. The climbing capability values given below only apply to overcoming obstacles on the roadway and to short differences in level, e.g. ramps.

It is permitted to drive the truck on the following ascending and descending gradients:

Model	Type	Maximum gradient [%]	
		With load	Without load
RX70-20/600	7400	29	26
RX70-25	7401	29	26
RX70-25/600	7402	25	24
RX70-30	7403	25	24
RX70-30/600	7404	24	20
RX70-35	7405	24	20

The stated values are used only to compare the performance of trucks in the same category. The gradient values in no way represent the normal daily operating conditions.

⚠ CAUTION

To use the truck safely—with or without a load—the maximum permitted ascending or descending gradient for travel is 15%.

– If you have any questions, contact your authorised service centre.

The ascending and descending slopes must not exceed the above gradient.

A rough road surface is non-slip and increases tyre grip.

Even transitions of the road surface to the gradient prevent impact with the ground. This helps to avoid damage to the load, the truck and the road surface.

– Do not drive downhill faster than the truck can drive uphill on the same gradient.

– Determine the maximum permissible speed with a test drive uphill, if necessary.

Warning in the event that components protrude beyond the truck contour

Trucks are designed to enter very narrow or very low areas, such as aisles and containers. Movable components may protrude beyond

the truck contour and be damaged or torn off. Examples of these components are:

- A roof panel that can be opened in the driver's cab
- Cab doors
- LPG cylinders that can be swung out

Condition of the roadways

Roadways must be firm, level and free from contamination and fallen objects.

The structural design of drains, level crossings and other similar facilities must enable them to be driven over with as few bumps as possible. If necessary, use ramps to compensate for uneven roadways.

Note the load capacity of manhole covers, drain covers etc.

There must be sufficient distance between the highest points of the truck or the load and the fixed elements of the surrounding area. The height is based on the overall height of the lift mast and the dimensions of the load; see the chapter entitled "Technical data".

Rules for roadways and the working area

Only routes approved by the operating company or its representative may be driven on. The roadways must be free of obstacles. The load must only be set down and stored in the designated locations. The operating company and its representative must ensure that unauthorised persons do not enter the working area.

NOTE

Please observe the definition of the following responsible person: "operating company".

Hazardous areas

Hazardous areas on roadways must be indicated by standard traffic signs or additional warning signs.

Selecting drive programmes 1 to 3 ▷

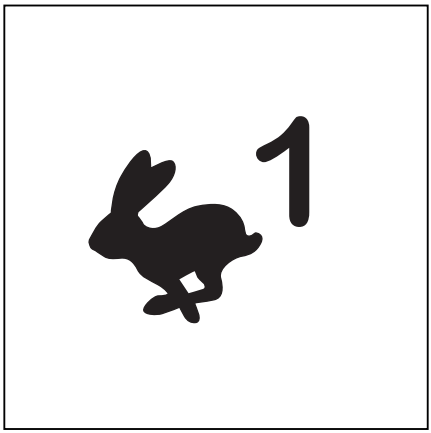

The truck has three drive programmes with different preset driving and braking characteristics. The basic principle is that the higher the number of the drive programme selected, the greater the driving dynamics.

The drive programme is selected using the display-operating unit under the "Drive" menu item.

– Press the Softkey 1... to select the desired drive 3 programme.

– If the drive programmes are saved as a favourite on a Softkey, press the "Drive programme" Softkey until the number of the desired drive programme is shown on the display. ▷

The number of dynamic bar segments indicates the driving dynamics of the selected drive programme:

- One bar: slower acceleration and deceleration
- Three bars: faster acceleration and deceleration

Selecting drive programme A or B ▷

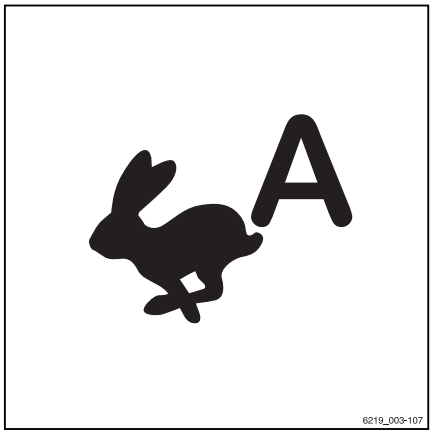

The truck has two driving programmes for personalised handling and braking characteristics.

Unlike the fixed drive programmes "1 to 3", the programs "A" and "B" can be configured. The procedure for this is described in the following section.

The drive programme is selected using the display-operating unit under the `Drive` menu item.

– Press the A or B softkey to select the desired drive programme.

– If the drive programmes are saved as a favourite on a softkey, press the soft-key until the letter of the desired drive programme is shown on the display.

Configuring drive programmes A and B

The drive programmes can be configured by the driver.

NOTE

Access to the settings menu is only available if the truck is at a standstill and the parking brake is applied. If the parking brake is released prematurely, the settings menu will close.

– Stop the truck.

– Actuate the parking brake.

– Press the button .

The first menu level appears.

– Press the "Settings" Softkey.

– Press the `Truck settings` Softkey.

– Press the `drive programme` Softkey.

The "drive programme" menu appears.

– Press the associated Softkey for `drive programme A` or `drive programme B`.

The process for configuring the drive programmes using "drive programme A" is explained here.

The menu **`Set drive programme A`** appears. ▷

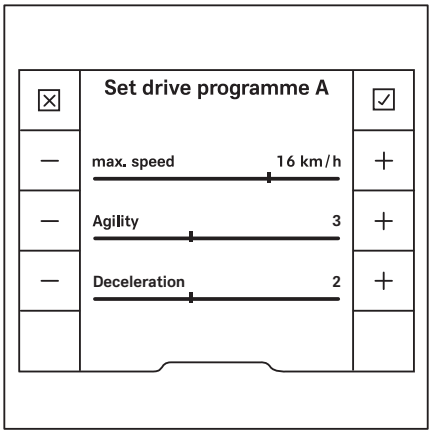

The following parameters can be set:

- `Max. speed`
  Determines the maximum speed (max. 21 km/h).
- `Agility`
  Determines the acceleration behaviour and the reversing behaviour using five levels.
  "1" indicates the lowest agility and "5" indicates the greatest agility
- `Deceleration`
  Determines the deceleration using five levels.
  "1" indicates the lowest deceleration and "5" indicates the greatest deceleration

– To select a higher level, press the appropriate "plus" Softkey ＋.

– To select a lower level, press the appropriate "minus" Softkey －.

– To save the setting, press the "confirm" Softkey ☑.

The settings are saved.

– To cancel the setting, press the "cancel" ☒ Softkey.

The settings return to the most recently saved value.

Press the button ↩ once to return to the previous menu level.

Selecting the drive direction

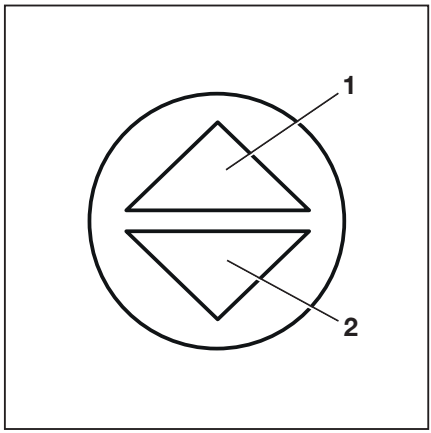

The drive direction of the truck must be selected using the drive direction switch/drive direction selection lever before attempting to drive. The method of actuating the drive direction switch/drive direction selection lever depends on the operating devices that are fitted in the truck.

The drive direction switch is located on the operating devices for the hydraulic functions. The drive direction selection lever is located on the travel direction selector and indicator module (variant).

NOTE

The drive direction can also be changed during travel. Your foot can remain on the accelerator pedal while you do so. The truck is then decelerated and accelerated again in the opposite direction (reversing).

The indicator for the selected drive direction ("forwards" (1) or "backwards" (2)) lights up on the display-operating unit.

Neutral position

If leaving the truck for a prolonged period, the neutral position must be selected in order to avoid the truck suddenly moving off due to an inadvertent actuation of the accelerator pedal.

– Briefly select the drive direction switch/drive direction selection lever for the direction opposite to the current drive direction.

The drive direction indicator on the display-operating unit goes out.

NOTE

When the seat is vacated, the selected drive direction is set to the "neutral position". To drive, the drive direction switch/drive direction selection lever must be actuated again.

Actuating the drive direction switch with the mini-lever version

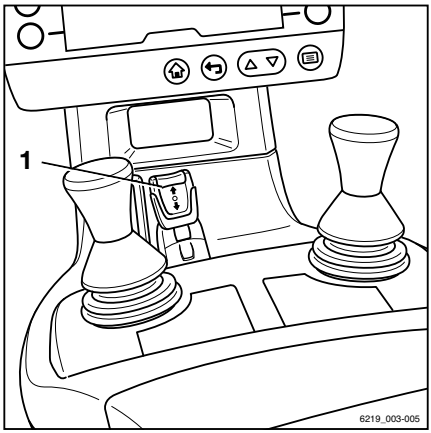

- For the "forwards" drive direction, push the drive direction switch (1) forwards.
- For the "backwards" drive direction, pull the drive direction switch (1) backwards.

NOTE

If the drive direction switch (1) is defective and the truck stops in a danger area, the drive direction selection lever on the travel direction selector and indicator module (variant) can be used for emergency driving. Refer to the section entitled "Emergency driving via the drive direction switch/drive direction selection lever" in the chapter entitled "Procedure in emergencies".

Actuating the vertical rocker button for the "drive direction", Joystick 4Plus version

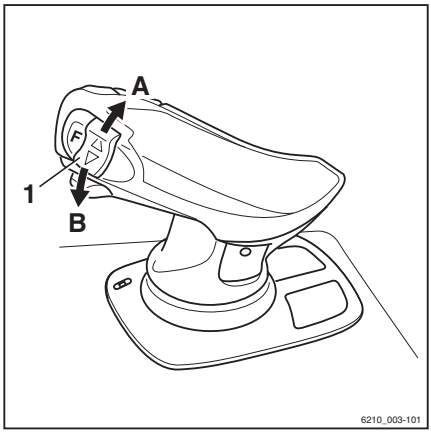

- For the "forward" drive direction, push the vertical rocker button for the "drive direction" (1) upwards (A).
- For the "backward" drive direction, push the vertical rocker button for the "drive direction" (1) downwards (B).

NOTE

If the drive direction switch (1) is defective and the truck stops in a danger area, the drive direction selection lever on the travel direction selector and indicator module (variant) can be used for emergency driving. Refer to the section entitled "Emergency driving via the drive direction switch/drive direction selection lever" in the chapter entitled "Procedure in emergencies".

Actuating the drive direction switch with the Fingertip version

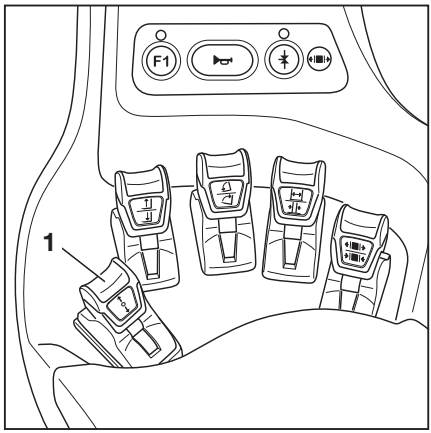

- For the "forwards" drive direction, push the drive direction switch (1) forwards.
- For the "backwards" drive direction, pull the drive direction switch (1) backwards.

NOTE

If the drive direction switch (1) is defective and the truck stops in a danger area, the drive direction selection lever on the travel direction selector and indicator module (variant) can be used for emergency driving. Refer to the section entitled "Emergency driving via the drive direction switch/drive direction selection lever" in the chapter entitled "Procedure in emergencies".

Actuating the drive direction switch, mini-console version

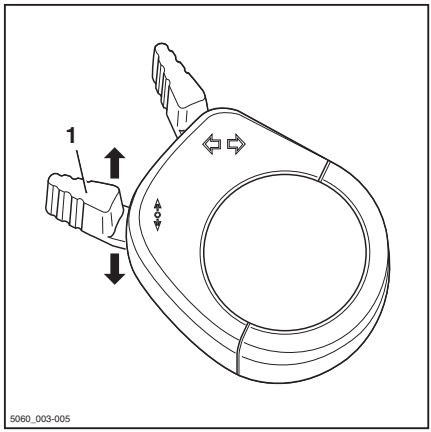

- For the "forwards" drive direction, push the drive direction switch (1) forwards.
- For the "backwards" drive direction, push the drive direction switch to the rear.

NOTE

Alternatively, the drive direction can also be selected using the drive direction switches on the operating devices.

Starting drive mode

DANGER

Risk to life if the truck rolls away or tips over!

- Sit on the driver's seat.
- Fasten the seat belt.
- Activate the available restraint systems.

– Observe the information in the chapter entitled "Safety regulations when driving".

The driver's seat is equipped with a seat switch. This seat switch checks whether the driver's seat is occupied. If the driver's seat is not occupied or if the seat switch is malfunctioning, the truck cannot be moved and all lifting functions are locked. In these situations, the message `Sit in the driver's seat` is shown on the display of the display-operating unit.

– Sit on the driver's seat. Fasten the seat belt.

– Lift the fork carriage until the necessary ground clearance is achieved.

– Tilt the lift mast backwards.

– Release the parking brake.

– Select the desired drive direction.

The indicator for the selected drive direction ("forwards" (1) or "backwards" (2)) lights up on the display-operating unit. ▷

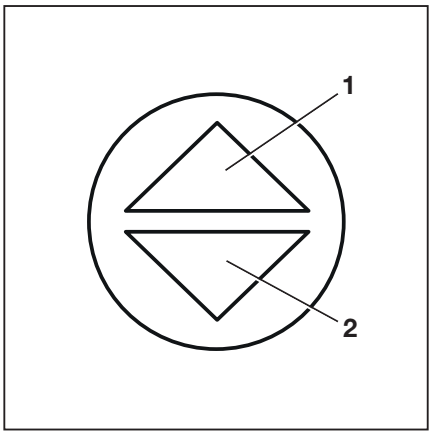

NOTE

Depending on the equipment, one of the equipment variants activates as a warning for reverse travel:

- *Signal tone*
- *Warning light*
- *Hazard warning system*

– Press the accelerator pedal (3).

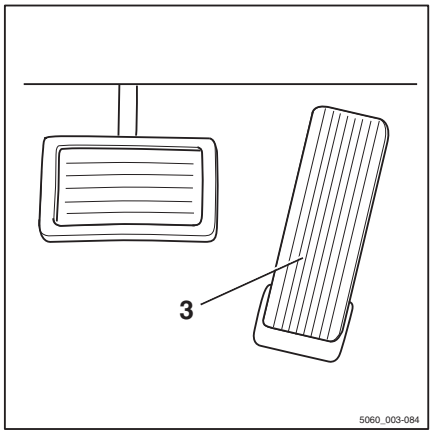

The truck travels in the selected drive direction. The speed is controlled by the accelerator pedal position. The truck brakes when the accelerator pedal is released.

NOTE

The truck is also held in place on ascending or descending gradients even if the electric parking brake is not engaged.

DANGER

Risk of accident due to brake failure!

The regenerative brake functions only while the truck is switched on and the parking brake is released.

– Use the brake pedal if the regenerative brake malfunctions.

– Engage the parking brake before leaving the truck.

Changing the drive direction

– Take your foot off the accelerator pedal.

– Select the desired drive direction.

– Press the accelerator pedal.

The truck will travel in the selected drive direction.

NOTE

The drive direction can also be changed during travel. Your foot can remain on the accelerator pedal while you do so. The truck is then decelerated and accelerated again in the opposite direction (reversing).

NOTE

If an electrical fault occurs in the accelerator, the drive unit is switched off. In this situation, the truck is not electrically braked. Once the electrical fault has been corrected, it will be possible to drive the truck again by releasing the accelerator pedal and then actuating the accelerator pedal again. If the truck still cannot be operated, park the truck securely and contact the authorised service centre.

Starting drive mode, dual pedal version (variant)

⚠ DANGER

Risk to life if the truck rolls away or tips over!

- Sit on the driver's seat.
- Fasten the seat belt.
- Activate the available restraint systems.

- Observe the information in the chapter entitled "Safety regulations when driving".

The driver's seat is equipped with a seat switch. This seat switch checks whether the driver's seat is occupied. If the driver's seat is not occupied or if the seat switch is malfunctioning, the truck cannot be moved and all lifting functions are locked. In these situations, the message `Sit in the driver's seat` is shown on the display of the display-operating unit.

- Sit on the driver's seat. Fasten the seat belt.
- Lift the fork carriage until the necessary ground clearance is achieved.
- Tilt the lift mast backwards.
- Release the parking brake.
- Press the right accelerator pedal (1) for the "forwards" drive direction and press the left accelerator pedal (2) for the "backwards" drive direction. ▷

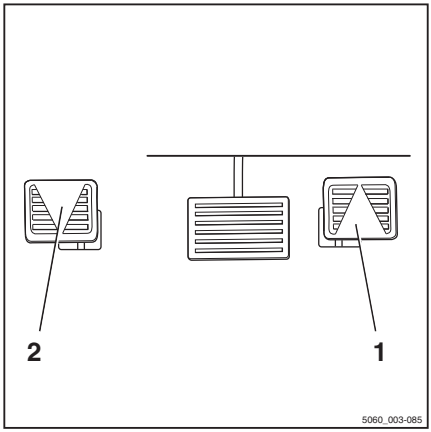

NOTE

In the dual pedal version, the drive direction switches do not function.

The indicator for the selected drive direction ("forwards" (1) or "backwards" (2)) lights up on the display-operating unit. ▷

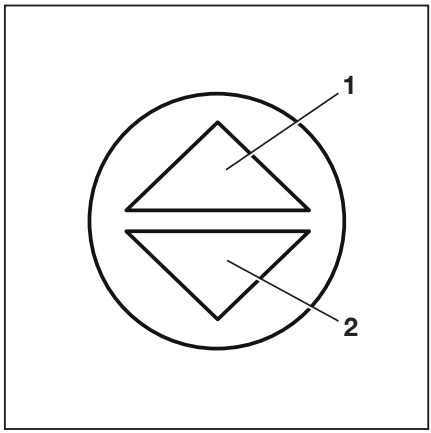

NOTE

Depending on the equipment, one of the equipment variants activates as a warning for reverse travel:

- *Signal tone*
- *Warning light*
- *Hazard warning system*

The truck travels in the selected drive direction. The speed is controlled by the accelerator pedal position. The truck brakes when the accelerator pedal is released.

NOTE

The truck is also held in place on ascending or descending gradients even if the electric parking brake is not engaged.

DANGER

Risk of accident due to brake failure!

The regenerative brake functions only while the truck is switched on and the parking brake is released.

– Use the brake pedal if the regenerative brake malfunctions.

– Engage the parking brake before leaving the truck.

Changing the drive direction

– Remove your foot from the actuated accelerator pedal.

– Press down the accelerator pedal for the opposite direction.

The truck will travel in the selected drive direction.

NOTE

If an electrical fault occurs in the accelerator, the drive unit is switched off. In this situation, the truck is not electrically braked. Once the electrical fault has been corrected, it will be possible to drive the truck again by releasing the accelerator pedal and then actuating the accelerator pedal again. If the truck still cannot be operated, park the truck securely and contact the authorised service centre.

Operating the service brake

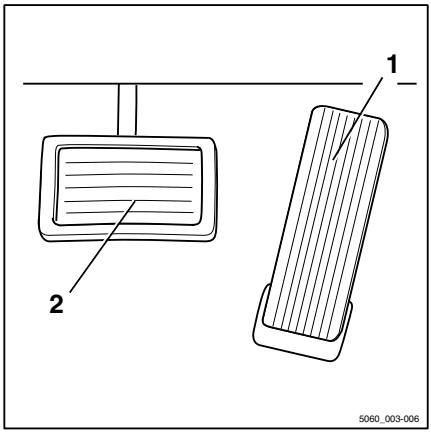

The electric brake converts the acceleration energy of the truck into electrical energy. This causes the truck to decelerate.

In addition, the truck can be braked using the service brake:

– Press the brake pedal (2).

In the first section of the brake pedal's travel, only the regenerative braking takes effect. As the pedal is depressed further, the service brake is also activated and acts on the drive wheels.

DANGER

Risk of accident!

If the service brake fails, the truck cannot brake sufficiently.

– Bring the truck to a standstill by applying the parking brake.
– Do not operate the truck again until the service brake has been repaired.

DANGER

Risk of tipping and risk of slipping!

The braking distance of the truck depends on the weather conditions and the level of contamination on the roadway. The braking distance increases with the square of the speed. There is a danger that the truck could slip or overturn.

– Adapt your driving and braking style to suit the weather conditions and the level of contamination on the roadway.
– Always choose a driving speed that will provide a sufficient stopping distance.

– Brake the truck by releasing the accelerator pedal (1).
– If the braking effect is inadequate, brake using the service brake (2) as well.

Zero braking (variant)

⚠ DANGER

Risk of accident!

Trucks with zero braking (variant) are not braked when the accelerator pedal is released.

– Bring the truck to a standstill by actuating the brake pedal.

If your truck features the zero braking equipment variant, the electric brake function is disabled. Taking your foot off the accelerator pedal does not brake the truck.

In this case, the truck can only be slowed by applying the service brake via the brake pedal.

Actuating the electric parking brake

⚠ DANGER

There is a risk of fatal injury from being run over if the truck rolls away.

– Do not park the truck on a gradient.
– Do not leave the truck until the parking brake has been applied.
– In an emergency, secure the truck with wedges on the downhill-facing side to prevent it from rolling away.

This truck is equipped with an electric parking brake. The parking brake is applied automatically when leaving the truck.

Despite these automatic aids, the driver is always responsible for parking the truck safely. The safety information about parking the truck safely applies.

▷

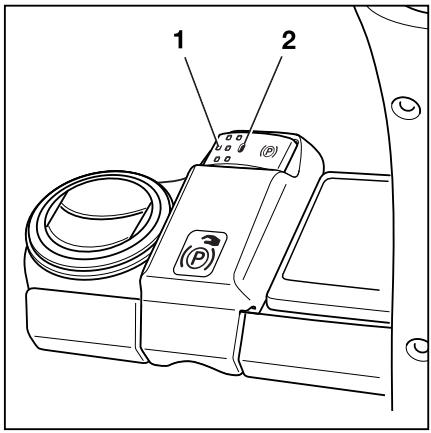

NOTE

The internal combustion engine must be switched on in order to apply and release the electric parking brake.

If the parking brake is applied, this is indicated by a symbol in the display-operating unit in place of the driving speed.

Symbols for the parking brake in the display-operating unit

Symbol	Description
(Ⓟ)	The parking brake was applied automatically. Actuating the accelerator pedal automatically releases the parking brake.
(Ⓟ)	The parking brake was applied by pressing the push button. Pressing the push button is the only way to release the parking brake.

Releasing the electric parking brake after the truck has been switched on

– Press the push button (1) to release the parking brake.

The traction motor keeps the truck at a standstill.

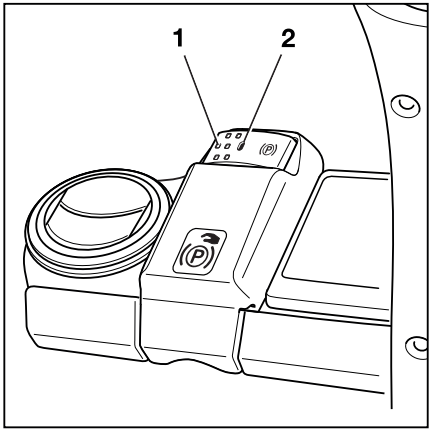

Manually actuating the electric parking brake when the truck is stationary

Applying the parking brake manually

– Press the push button (1).

The electric parking brake will make a noise when it is applied and the LED (2) lights up continuously. The (Ⓟ) symbol appears in the display.

Releasing the parking brake manually

– Sit on the driver's seat.

– Press the push button (1).

The electric parking brake will make a noise when it releases and the LED (2) goes out.

The driving speed display is replaced by the (Ⓟ) symbol.

Automatic actuation of the electric parking brake when the truck is stationary

The electric parking brake is applied automatically when the truck is stationary in the following situations:

Automatically triggered actuation when the truck is stationary

Cause	Effect
The driver's seat is vacated.	The electric parking brake will make a noise when it is applied. The LED (2) lights up.
The internal combustion engine is switched off.	The electric parking brake is immediately applied with an audible sound. The LED (2) lights up until the control units switch off.

If the electric parking brake has applied automatically, the Ⓟ symbol appears in the display-operating unit. The LED (2) lights up.

– To release the electric parking brake, the driver must sit down on the driver's seat again.

– Press the accelerator pedal.

The electric parking brake will make a noise when it is released. The LED (2) goes out.

NOTE

If the Ⓟ symbol appears in the display, the truck cannot be driven until the electric parking brake has been released by pressing the push button (1). The symbol may appear if the parking brake was not applied as a result of releasing the accelerator pedal or vacating the driver's seat.

Actuation of the electric parking brake when the truck is in motion

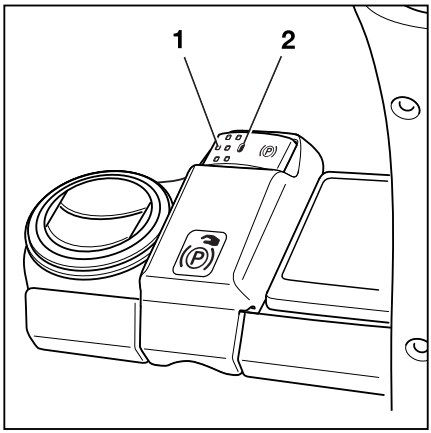

Manual actuation when the truck is in motion

– Press the push button (1).

The truck is braked with the drive unit in accordance with the selected drive programme. Once the truck has come to a standstill, the electric parking brake is applied with an audible sound. The LED (2) lights up with a steady light. The Ⓟ symbol appears in the display-operating unit.

– If the braking effect is insufficient, also use the service brake.

NOTE

If the drive unit fails, the truck can be braked by pressing the push button (1). The truck brakes more strongly if the push button (1) is pressed and held or pressed several times. The electric parking brake cannot be released by actuating the accelerator pedal.

⚠ WARNING

Risk of accident!

The truck may decelerate abruptly.

– Fasten the seat belt.

Automatically triggered actuation when the truck is in motion

Cause	Effect
The driver's seat is vacated.	The truck is braked in accordance with the selected drive programme. Once the truck has come to a standstill, the electric parking brake is applied with an audible sound. The LED (2) lights up. The Ⓟ symbol appears in the display.
The key switch is switched off.	The truck will coast to a stop. Once the truck has come to a standstill, the electric parking brake is applied with an audible sound. The LED (2) lights up. The Ⓟ symbol appears in the display until the control units switch off.

Cause	Effect
The truck accelerates sharply, even though the driver's seat has been vacated.	The electric parking brake is immediately applied with an audible sound. The LED (2) lights up. The Ⓟ symbol appears in the display.
The truck accelerates sharply, even though the accelerator pedal has not been actuated.	The parking brake is immediately applied with an audible sound. The LED (2) lights up. The Ⓟ symbol appears in the display.

Malfunctions in the electric parking brake

⚠ DANGER

There is a risk of fatal injury from being run over if the truck rolls away.

– Do not park the truck on a gradient.
– Do not leave the truck until the parking brake has been applied.
– In an emergency, secure the truck with wedges on the downhill-facing side to prevent it from rolling away.

– Before leaving the truck, make sure that the parking brake is properly applied.

Message:
Apply parking brake via button.

If the truck control unit detects a malfunction in the parking brake, the truck cannot be switched off.

- The ⓘ `Apply parking brake via button` message appears on the display-operating unit.
- The LED (1) on the push button (2) flashes.
- A warning signal sounds.

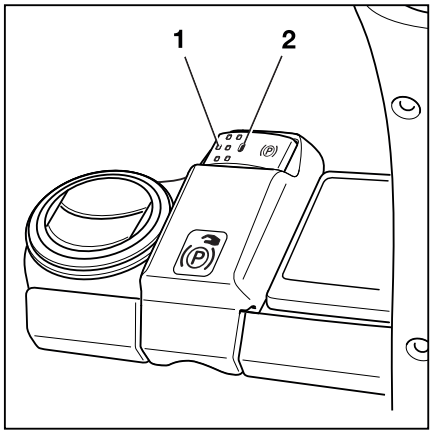

NOTE

If it becomes necessary to switch off a truck with a faulty parking brake, always secure the truck to prevent it from rolling.

A possible cause of the malfunction is that the parking brake cannot determine whether the truck is stationary or still in motion. The

following section describes how to actuate the parking brake when it is faulty:

Actuating a faulty parking brake when the truck is stationary

There are two ways to apply the parking brake:

– Press and hold the push button (1) for at least five seconds and then release the push button.

OR

– Press the push button (1) several times in succession so that the push button is actuated for a total of 5 seconds.

The parking brake is applied with an audible sound. After the push button is released, the parking brake should not make any further sounds; if a sound is heard, this means the push button was pressed for less than five seconds. In this case, press the push button again to apply the parking brake again. Repeat this process as necessary until the parking brake applies and the (P) symbol appears.

Actuating a parking brake with a malfunction when the truck is in motion

– Press the push button (1).

The parking brake is applied.

NOTE

The truck brakes more strongly if the push button (1) is pressed and held down for longer or pressed several times.

"Safe parking" function

This function monitors the braking effect after the truck is parked. If a sensor is fitted on the lift mast (variant), it also checks whether the fork carriage is lowered.

This function alerts the driver with an audible warning signal if:

- The driver leaves the driver's seat and it has not been possible to apply the parking brake
- The driver leaves the driver's seat without lowering the fork carriage (variant)
- The driver attempts to switch off the truck and it has not been possible to apply the parking brake
- The truck starts moving within the next 20 seconds after the parking brake is applied

Activation and intervention by the "Safe parking" function

Cause	Effect
The driver's seat is vacated. The electric parking brake cannot be applied or previously could not be applied.	The following message appears in the display: `Parking brake cannot be applied.` - To confirm the message, press the ☑ Softkey. A warning signal sounds when the driver's seat is vacated. Sitting in the driver's seat silences the warning signal again.
The truck must be switched off. The electric parking brake cannot be applied or previously could not be applied.	The truck cannot be switched off. A warning signal sounds. The following messages appear in the display: `Parking brake cannot be applied.` ⓘ - To confirm the message, press the ☑ Softkey. `Switch off truck anyway?` ? - To confirm the message, press the ☑ Softkey. `Secure the truck to prevent it from rolling.` ⚠ - Secure the truck with wedges so that the truck does not roll away. - To confirm the message, press the ☑ Softkey. It is now possible to switch off the truck.

⚠ DANGER

Risk of fatal injury from being run over if the truck rolls away!

Park the truck securely if the parking brake is faulty. Secure the industrial truck to prevent it from rolling away.

– To do this, strictly adhere to the following instructions:

– If the parking brake cannot be applied automatically or via the push button, perform an emergency actuation of the parking brake. Refer to the section entitled "Emergency operation of the parking brake" in the chapter "Procedure in emergencies".

– If the parking brake cannot be applied via the emergency actuation mechanism, secure the truck with wedges so that the truck cannot roll away.

– Have the parking brake repaired by an authorised service centre.

Message: Parking brake cannot be applied

If the truck control unit detects a malfunction in the parking brake, the truck cannot be switched off. ▷

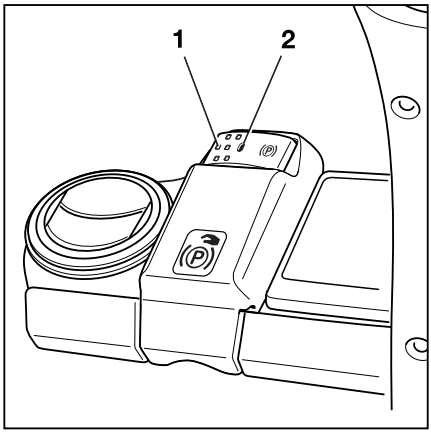

- The `Parking brake cannot be applied` message appears on the display-operating unit. 🕮
- The LED (2) on the push button (1) flashes.
- A warning signal sounds.

NOTE

If it is necessary to switch off a truck with a faulty parking brake, the section entitled "Switching off the truck when the electric parking brake is faulty" must be observed. It is essential to secure the truck to prevent it from rolling away.

NOTE

If the parking brake is released via the emergency actuation mechanism, it is possible to drive the truck at a low speed.

- *The truck can be moved out of the hazardous situation or to the repair location.*
- *Driving with a faulty parking brake requires the driver to be especially vigilant.*

– If the parking brake cannot be applied automatically or via the push button, apply the parking brake via the emergency actuation process. Refer to the section entitled "Emergency operation of the parking brake" in the chapter "Procedure in emergencies".

- If the parking brake cannot be applied via the emergency actuation process, secure the truck with wedges so that the truck cannot roll away.
- Have the parking brake repaired by an authorised service centre.

Steering

⚠ DANGER

If the hydraulics fail, there is a risk of accident as the steering characteristics have changed.

– Do not operate the truck if it has a defective steering system.

– Steer the truck by turning the steering wheel (1) accordingly.

Turning the steering wheel in the direction of arrow (A) steers the truck in drive direction (A).

Turning the steering wheel in the direction of arrow (B) steers the truck in drive direction (B).

For turning radius information, see ⇒Chapter "Technical data", Page 459 .

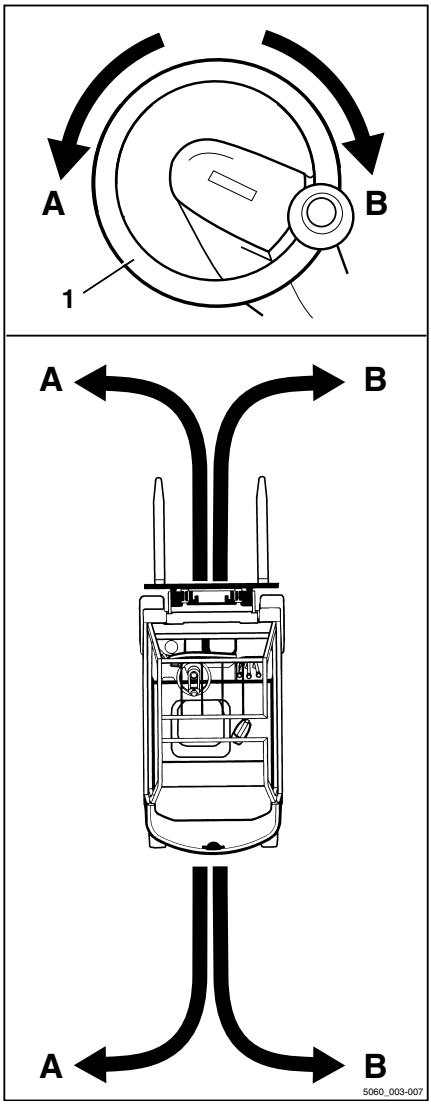

Speed reduction when the fork carriage is raised (variant)

If the fork carriage is lifted to a height above 500 mm, this assistance system automatically reduces the speed of the truck.

NOTE

This lift height can be changed up to 500 mm either by the authorised service centre or with the "Access authorisation for the fleet manager" via the display-operating unit.

Configuration by the fleet manager

Entering the lift height

– Activate the "Access authorisation for the fleet manager".

– Press the button.

– Press the softkey.

– Press the `Truck settings` softkey. ▷

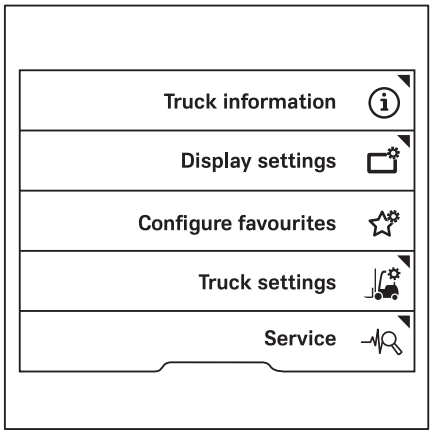

– Press the `Speed restriction for lift` softkey. ▷

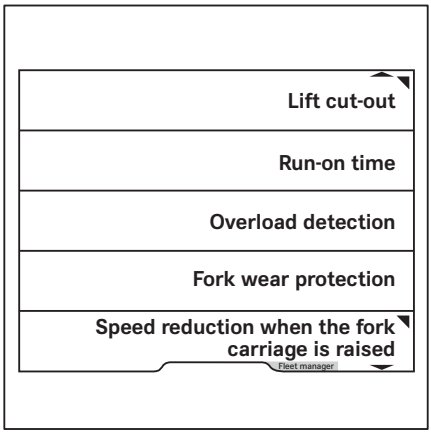

– Press the `Lift height` softkey. ▷

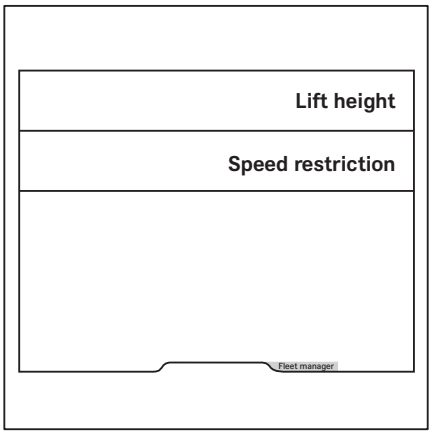

In this menu you can define the desired height. ▷

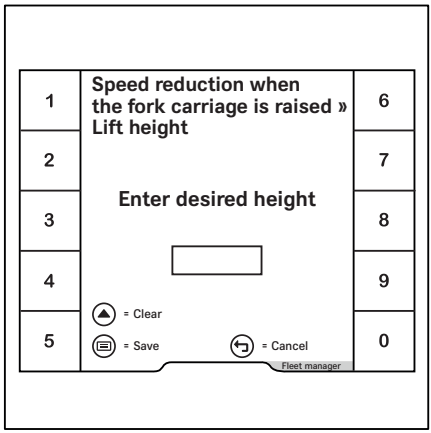

NOTE

The assistance system intervenes automatically from 500 mm. Thus, the height can only be freely selected up to 500 mm.

– Enter the height using softkeys `0 to 9`.

– To `save`, press the button.

The menu closes.

Entering the speed restriction

The maximum speed can be defined, just like the lift height.

– Activate the "Access authorisation for the fleet manager".

– Press the button.

– Press the softkey.

– Press the `Truck settings` softkey. ▷

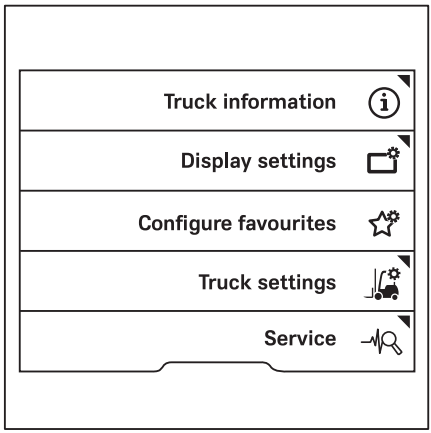

– Press the `Speed restriction for lift` softkey. ▷

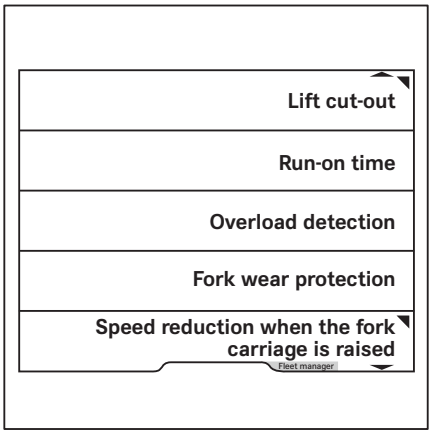

– Press the `Speed restriction` softkey. ▷

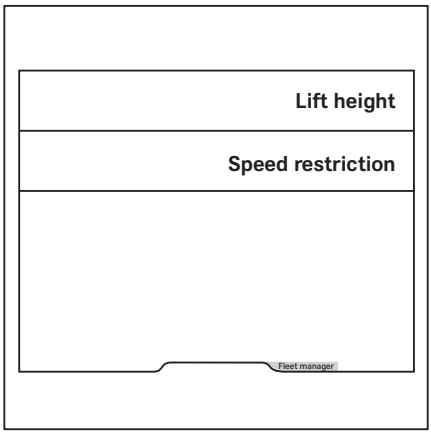

In this menu you can define the maximum speed.

– Enter the speed using softkeys `0 to 9`.

– To `save`, press the button.

The menu closes.

▷

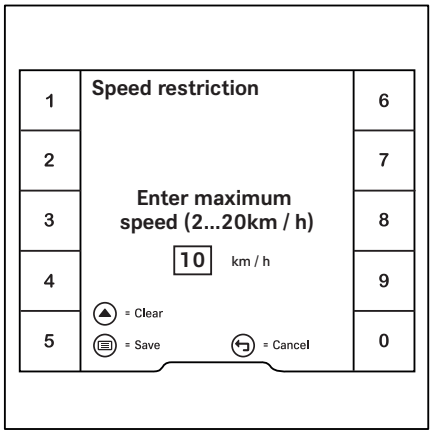

Engine automatic shut-off function (variant)

If certain conditions are met and a pre-set response time has elapsed, the engine automatic shut-off function (variant) automatically switches off the internal combustion engine.

The message `CUTOUT MODE` appears in the display.

Conditions that apply simultaneously:

- The truck is stationary.
- The driver's seat is not occupied.
- Energy-intensive consumers are switched off, e.g. the air conditioning.

Response time

The response time is set between 30 seconds and 30 minutes at the factory.

If all the conditions are met simultaneously, the response time starts to count down.

As soon as one of the conditions is no longer met, the response time stops counting down.

If all the conditions are met again, the response time starts to count down again from the beginning.

10 seconds before the response time elapses, the following message appears: `Switch off combustion engine`.

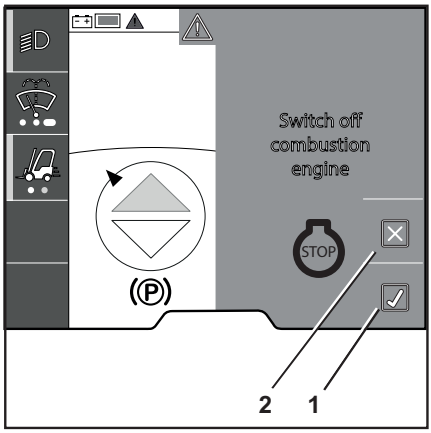

The following driver responses are possible:

– No response

The engine switches off after 10 seconds.

– Press softkey ☒.

The engine does not switch off.

– Press softkey ☑.

The engine switches off **immediately**.

After the automatic shut-off function has switched off the engine, the driver can start the engine again via the display-operating unit.

– Sit on the driver's seat.

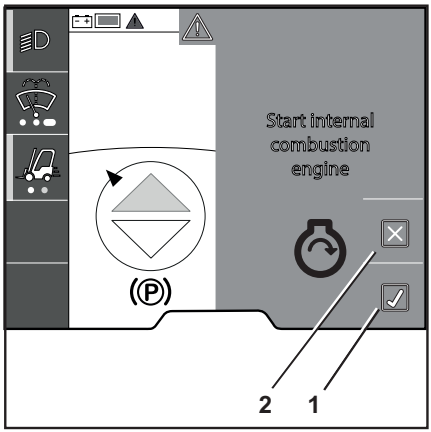

The message `Start internal combustion engine` appears.

The following driver responses are possible:

– Press softkey ☒.

The engine does not start; the message disappears.

– Press softkey ☑.

The engine starts; the message disappears.

– To change the response time, contact the authorised service centre.

Engine stalls because the evaporator has iced over

NOTE

Gas cools significantly upon evaporation. If the evaporator is not warmed sufficiently by the coolant circulation in the engine, it may ice over. This can interrupt the gas supply and the engine stalls.

If the engine stalls directly after the key switch is actuated, proceed as follows:

De-ice the evaporator via the coolant circulation

⚠ DANGER

Risk of fire! If the engine stalls before it has used up the residual gas, residual gas can remain in the evaporator. This cooled gas expands upon heating and is conveyed into the engine. From the engine, the gas can be conveyed further into the exhaust system. When the next start attempt occurs, the gas in the exhaust system may ignite, or smouldering particles may shoot out of the exhaust pipe.

If the truck stalls when in the vicinity of combustible or easily flammable materials, do not attempt to start the truck in this area. Tow the truck out of the danger area before attempting to start the truck again. Make sure that there are no people or objects in the area behind the exhaust.

- Close the valve on the gas cylinder.
- Disconnect the plug (1) from the gas shut-off valve. The gas shut-off valve is closed. The gas flow to the evaporator is blocked.
- Attempt to start the engine again using the key switch. If the engine starts, leave it running until it stalls again due to the lack of gas.
- Once the engine has stalled, wait for two minutes then start the engine again, allowing it to run until it stalls again.
- Once the engine has stalled again, reinsert the plug (1) into the gas shut-off valve. Start the engine again and allow it to run.
- If the engine runs steadily while idling, after approx. 15 seconds slowly open the valve on the gas cylinder and allow the engine to idle so that it reaches operating temperature.

▷

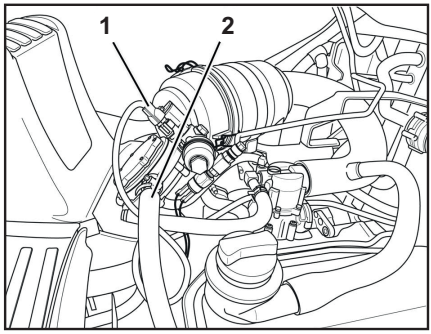

– Check that the cooling water supply (2) to the evaporator is warm.

– Wait until the evaporator has reached operating temperature as a result of the truck idling.

– If the evaporator has not warmed up, slowly close the valve on the gas cylinder and allow the engine to run until it stalls by itself due to the lack of gas.

– You can now attempt to de-ice the evaporator using a different method. To do this, proceed as described in the following chapter.

▷

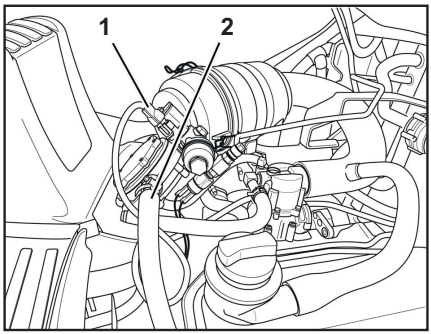

Manually de-icing the evaporator

⚠ DANGER

Risk of explosion when de-icing the gas system! Gas can ignite and explode when exposed to excessive heat, naked flames, smouldering objects and objects that produce sparks.

Never thaw frozen system components by means of a naked flame or smouldering objects! Carefully follow the instructions below.

⚠ DANGER

Risk of explosion! Escaping gas can ignite when it comes into contact with the heating coil in heating devices such as a hot air gun. During de-icing tasks, the heat source must not exceed 50°C.

Do not deliver the warm air straight from a heating device. However, it is acceptable to deliver the warm air via a warm air hose.

The following resources are suitable for thawing frozen system components:

- Warm air
- Warm water
- Warm sandbags

– Once the system components have been thawed, de-ice the evaporator using the above resources.

– Switch on the key switch and start the engine.

– If the engine still stalls, do not attempt to start the truck; contact the authorised service centre.

Cruise control (variant)

The cruise control function keeps the driving speed constant. In addition, the cruise control function can be used to comply with any speed limitation that is in force. The cruise control function operates when driving forwards at a speed of 6 km/h or faster. The function is put on standby via the display-operating unit and can be activated and deactivated using the drive direction switch on the operating device for the hydraulic functions.

When the cruise control function is activated, the speed can be saved when driving forwards at a speed of at least 6.0 km/h by pressing a button and the truck can continue driving without the accelerator pedal being actuated.

The pictogram for operating the cruise control function is located on the operating device for the hydraulic functions.

Putting the cruise control function on standby

In order for the cruise control function to be activated via the drive direction switch, the function must first be put on standby using the display-operating unit.

– Press the button.

The first menu level appears.

– Press the "Drive" softkey .

The "Drive" menu appears.

– Press the "cruise control" softkey. ▷

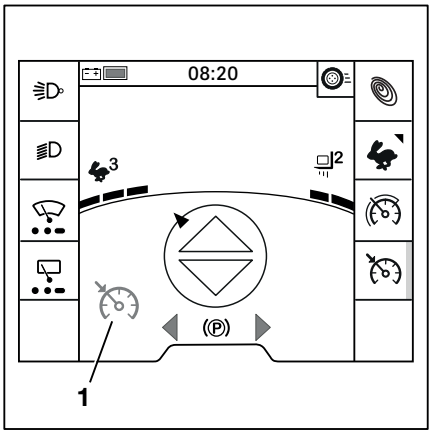

The orange-coloured activation bar next to the "cruise control" softkey lights up. The cruise control function is ready.

The greyed-out "cruise control" symbol (1) appears on the display.

Taking the cruise control function off standby

Pressing the "cruise control" softkey again takes the function off standby.

A signal sounds. The "cruise control" symbol goes out.

Activating cruise control function

⚠ WARNING

Risk of accident from failing to adjust speed!

Driving at excessive speeds can cause accidents, e.g. the truck could tip over when cornering.

- Adjust speed along the entire distance being travelled
- Pay particular attention to cornering speed
- Observe safety regulations when driving
- Observe the special behaviour of the cruise control function and the dangers associated with it

– Accelerate the truck to the required speed (at least 6.0 km/h)

– Actuate the drive direction switch (1) for forwards travel. ▷

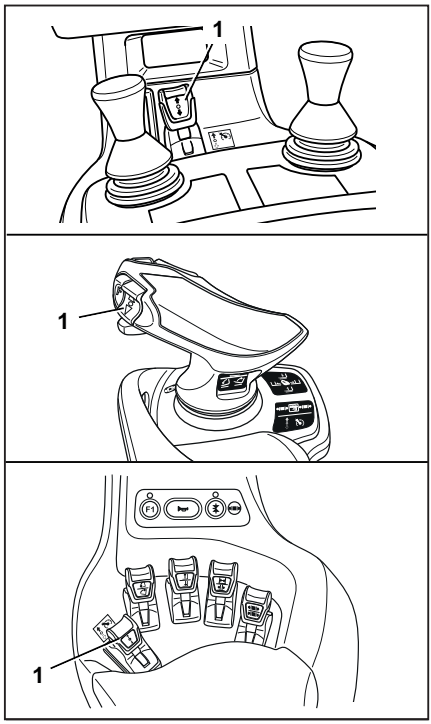

NOTE

In the dual pedal version (variant), the drive direction switch is used exclusively to activate and deactivate the cruise control function (variant).

The cruise control function is active. The current speed is saved.

Two signals sound. The symbol appears in black on the display.

– Take your foot off the accelerator pedal.

The truck continues to drive at the selected speed until the cruise control function is deactivated.

– To save a different speed, deactivate the cruise control function and activate the function at the newly selected speed.

Deactivating cruise control

Deactivating the cruise control function means that the speed is again controlled by the accelerator pedal. The cruise control function remains on standby. The function can be activated at any time when the accelerator pedal is depressed by pressing the drive direction switch for forwards travel again.

When the cruise control function is deactivated, the symbol is greyed out.

NOTE

The easiest way to deactivate the cruise control function is to touch the accelerator pedal.

The following actions deactivate the cruise control function:

- Actuating the foot brake
- Actuating the parking brake
- Actuating the accelerator pedal

  Depressing the accelerator pedal beyond the set speed accelerates the truck.
- Changing the travel direction

- Press the drive direction switch for forwards travel again without actuating the accelerator pedal
- Press the "cruise control" softkey
  Actuating the "cruise control" softkey switches off the cruise control function.

Other conditions that will cause the truck control unit to deactivate the cruise control function are:

- Vacating the driver's seat
- Truck speed less than 2.5 km/h.
- Speed limit set to less than 4.5 km/h.
- The truck control unit detects abnormalities, e.g. a voltage drop

If the accelerator pedal is actuated in these circumstances, the truck is initially braked via the drive unit. The following message appears on the display: `Release the accelerator pedal`.

– To continue driving, release the accelerator pedal and actuate it again.

If these circumstances have changed again, the speed that was initially saved is set again.

NOTE

If the truck is configured with automatic functions to reduce the driving speed and the driving speed is reduced to 6.0 km/h or less, the cruise control function is automatically deactivated.

Parking

Parking the truck securely and switching it off

DANGER

Risk of fatal injury from the truck rolling away!

- Do not park the truck on gradients.
- In emergencies, secure the truck using wedges on the side facing downhill.
- Only leave the truck when the parking brake has been applied.

DANGER

There is a risk of fatal injury from a falling load or parts of the truck being lowered!

- Lower the load fully before leaving the truck.

WARNING

Volatile LPG can build up and ignite. There is a risk of explosion!

LPG is heavier than air. It collects on the ground, where it may form hazardous explosive mixtures of gas and air.

- Do not park the truck near pits, cellars, stairwells, heating systems or other heat sources.
- Do not park the truck below ground level.
- Protect gas cylinders from heat.
- Observe the safety regulations for working with LPG.

- Apply the parking brake.
- Lower the fork to the ground.
- Tilt the lift mast forwards until the tips of the fork arms rest on the ground.
- If attachments (variant) are fitted, retract the working cylinders; see the chapter entitled "General instructions for controlling attachments".
- Take your foot off the accelerator pedal and allow the engine to continue idling for a short while.

– Turn the switch key to the left and remove it.

The solenoid valve in the LPG system will close. The engine will continue to run for a few seconds in order to burn off the gas remaining in the LPG system. This process can take anything from 2–20 seconds, depending on the temperature of the LPG.

NOTE

An error has occurred if the engine switches off only after around 60 seconds and the `LPG AUTO.VALVE` *error message appears on the display and operating unit. The truck can still be operated but your authorised service centre must be notified of the error immediately. The error message is shown on the display and operating unit until the error has been rectified by the authorised service centre.*

NOTE

Switch keys, FleetManager cards (variant), FleetManager transponder chips (variant) and the PIN code for access authorisation (variant) must not be handed over to other persons unless explicit instructions to this effect have been given.

– For trucks with an LPG tank (variant), close the shut-off valve (6). ▷

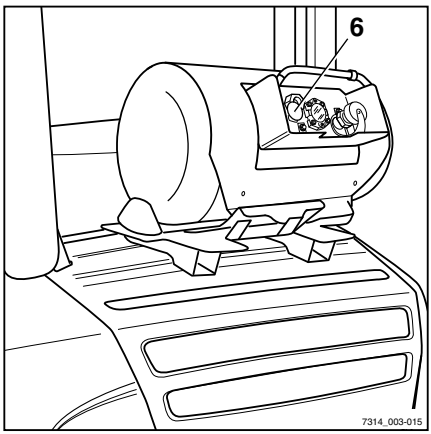

– For trucks with LPG cylinders, close the cylinder valve (7). ▷

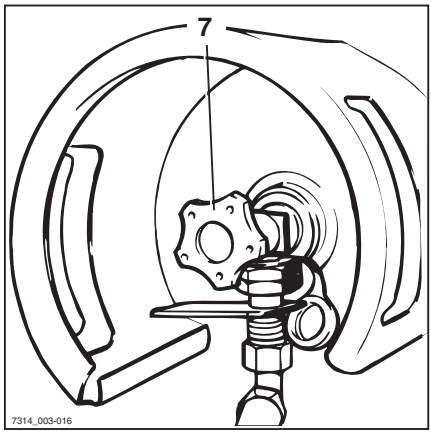

Wheel chock (variant) ▷

The wheel chock (variant) is used to prevent the truck from rolling away on a slope.

– Lift handle (2) on the support mounting.

– Remove wheel chock (1) from the support mounting.

– Push the wheel chock under a front axle wheel on the side facing the downhill slope.

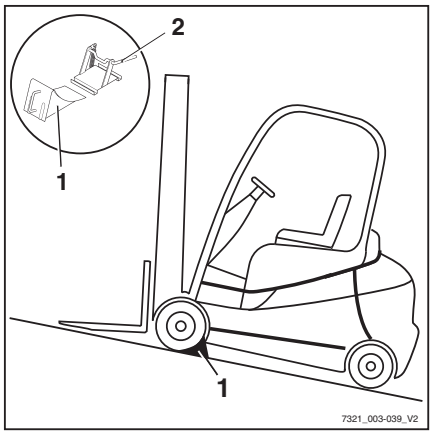

NOTE

After use, return the wheel chock to the support mounting and press the handle (2) down again.

Lifting

Lifting system variants

The movement of the fork carriage and the lift mast heavily depends on the following equipment:

- The lift mast with which the truck is equipped, see ⇒Chapter "Types of lift mast", Page 198
- The operating device with which the hydraulic functions are controlled, see ⇒Chapter "Lifting system operating devices", Page 201

Regardless of the equipment variants of the truck, the basic specifications and procedures must be complied with, see ⇒Chapter "Safety regulations when handing loads", Page 219 .

Automatic mast vertical positioning (variant) ▷

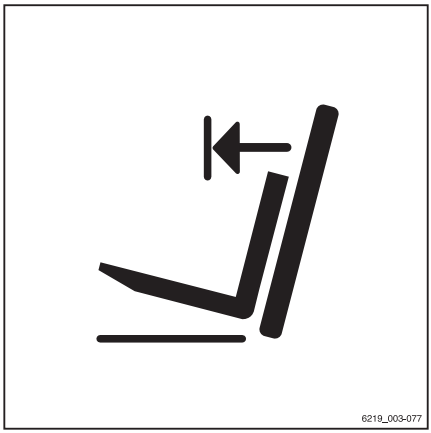

⚠ CAUTION

Risk of damage to property due to the lift mast colliding with racks or other objects!

– Before using the "automatic mast vertical positioning" assistance system, position the truck at a sufficient distance from racks and other objects.

The "automatic mast vertical positioning" assistance system can be used to set down the goods so that the goods are exactly vertical, e.g. paper rolls. This prevents damage when setting down the load. "Automatic mast vertical positioning" functions when tilting forwards. A further variant is available which also functions when tilting backwards. The tilt cylinders run into the end stops gently to prevent hard vibrations and impacts. Oscillating motions of the truck are minimised, thus increasing work safety. Automatic mast vertical positioning reduces wear on various components, thereby reducing repair costs.

The "automatic mast vertical positioning" assistance system consists of the following individual functions:

- Display of the "Automatic mast vertical positioning" feature
- Automatic startup of the "Automatic mast vertical position" feature

The truck can also be equipped with only the "mast tilt angle display" feature.

NOTE

Check the function of automatic mast vertical positioning whenever the truck is used.

– See the section entitled "Function checking of the automatic mast vertical positioning function".

– Press the softkey.

The symbol appears in the display.

– Tilt back the lift mast until it reaches the end stop.

– Tilt the lift mast forwards.

The lift mast stops in the vertical position.

NOTE

The lift mast also stops in the vertical position if it is tilted forwards by ≥ 3° from a backward tilt.

NOTE

The automatic mast vertical positioning must be calibrated in order to ensure accuracy at all times. The "access authorisation for the fleet manager" is required for the calibration. This access is required:

- *When placing loads into stock and removing loads from stock on HGV ramps*
- *In the event of tyre wear*
- *If the lift mast is obviously not in the vertical position*

– See the section entitled "Calibrating the automatic mast vertical positioning".

Types of lift mast

One of the following lift masts may be installed in the truck:

Telescopic mast

During lifting, the lift mast rises over the outer lift cylinders, bringing the fork carriage with it via the chains (fork carriage rises twice as fast as the inner lift mast). The top edge (1) of the inner lift mast can therefore be higher than the fork carriage.

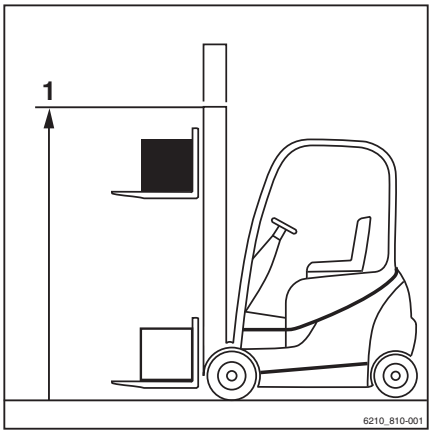

⚠ DANGER

Risk of accident due to collision of the lift mast or load with low ceilings or entrances.

- Note that the inner lift mast or load may be higher than the fork carriage.
- Note the heights of ceilings and entrances.

Hi-Lo lift mast (variant)

During lifting, the inner lift cylinder moves up to free lift (3), and then the outer lift cylinders raise the inner lift mast up to the max. height (2).

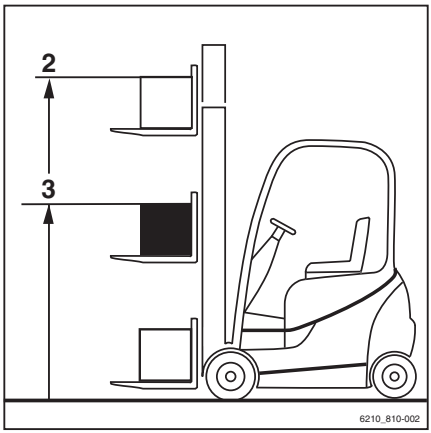

NOTE

When lifting above the free lift, the fork carriage always remains at the upper edge of the extending lift mast.

⚠ DANGER

Risk of accident due to collision of the lift mast or load with low ceilings or entrances.

- Note that the inner lift mast or load may be higher than the fork carriage.
- Note the heights of ceilings and entrances.

Triplex lift mast (variant)

During lifting, the inner lift cylinder moves up to free lift (3), and then the outer lift cylinders raise the inner lift mast up to the max. height (2).

⚠ DANGER

Risk of accident due to collision of the lift mast or load with low ceilings or entrances.

– Note that the inner lift mast or load may be higher than the fork carriage.

– Note the heights of ceilings and entrances.

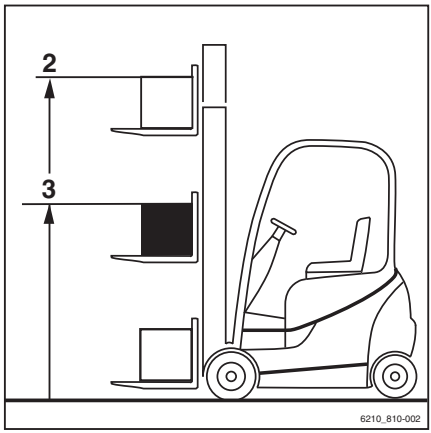

Malfunctions during lifting mode

Incorrect extension sequence

⚠ DANGER

Risk of accidents!

In the case of Hi-Lo lift masts (variant) and triplex lift masts (variant), an incorrect extension sequence may occur, i.e. the inner lift mast may extend before the free lift is complete. As a result, the overall height is exceeded and damage may occur in passageways or from low ceilings.

An incorrect extension sequence may, for instance, result from:

- The hydraulic oil temperature being too low.
- Blocking of the fork carriage in the inner lift mast.
- Blocking of the free lift cylinder.
- Blocking of the chain roller on the free lift cylinder.

– If the hydraulic oil temperature is too low, slowly actuate the lift mast functions several times in order to raise the oil temperature.

In the event that the fork carriage is blocked in the inner lift mast, or the free lift cylinder or chain roller are blocked, the cause of the blockage must be eliminated before resuming work.

– Notify your service centre

Load chains not under tension

⚠ DANGER

Danger caused by a falling load!

– Make sure that the chain(s) does (do) not become slack when lowering the load.

Slack chains can, for instance, result from:

- Resting the fork carriage or the load on the racking.
- Fork carriage rollers blocking in the lift mast due to contamination.

– If the fork carriage or the load comes to an unexpected stop, lift the fork carriage until the chains are under tension again and lower the load at another suitable location.

– If the fork carriage rollers in the lift mast become blocked due to contamination, lift the fork carriage until the chains are under tension again. Remove the contamination before resuming work.

⚠ WARNING

Risk of injury!

– Observe the safety regulations for working on the lift mast, see the chapter entitled "Working at the front of the truck".

Hydraulic blocking function

The hydraulic blocking function ensures that all the functions of the working hydraulics are disabled whenever the seat switch in the driver's seat is unloaded.

If the driver stands up from the driver's seat, the blocking function prevents the hydraulic functions that:

- Lift the load
- Lower the load
- Tilt the lift mast
- Additional functions

Releasing the block on the hydraulics

Proceed as follows to release the block on the hydraulics:

– Sit down on the driver's seat.

All the relevant functions of the working hydraulics will be available again.

NOTE

If it is not possible to release the block on the hydraulics when the load is raised because of a technical fault, the load must be lowered using the "emergency lowering" mechanism before any further action is taken. Do not operate the truck again until the fault has been rectified by the authorised service centre.

Lifting system operating devices

The method of operating the lifting system depends on the operating devices included in the truck's equipment.

Possible equipment variants include:

- **Double mini-lever**
- **Triple mini-lever**
- **Quadruple mini-lever**
- **Joystick 4Plus**
- **Fingertip**

– The following information must be observed regardless of the equipment variant.

DANGER

Reaching into or climbing between moving parts of the truck (e.g. lift mast, sideshifts, working equipment, load carrying devices etc.) can lead to serious injury or death and is therefore prohibited.

– Observe the safety regulations for handling loads.

– Only operate the lifting system from the driver's seat.

WARNING

If several hydraulic functions are used at the same time, these functions can influence each other.

For example, if the fork carriage is raised and an attachment is operated at the same time, this may change the lifting speed or the operating speed of the attachment.

Controlling the lifting system using a double mini-lever ▷

⚠ DANGER

Reaching into or climbing between moving parts of the truck (e.g. lift mast, sideshifts, working equipment, load carrying devices etc.) can lead to serious injury or death and is therefore prohibited.

– Observe the safety regulations for handling loads.
– Operate the lifting system from the driver's seat only.

⚠ WARNING

Risk of accident as a result of an operating error!

These operating instructions describe how to operate the lifting system in the factory configuration.

If the authorised service centre has configured a different configuration, the newly applied pictograms must be observed to ensure safe operation. The operating company must make all drivers aware of the fact that a different configuration has been configured.

– Observe the pictograms on the operating levers.
– Before use, check that the hydraulic functions are working correctly.

The lifting, lowering and tilting movements of the lift mast are controlled using the "lift mast" 360° lever (3). The adhesive label bearing the pictograms for the hydraulic functions (1) or (2) is affixed at the designated point (4).

The pictograms are arranged according to the direction of movement of the "lift mast" 360° lever (3).

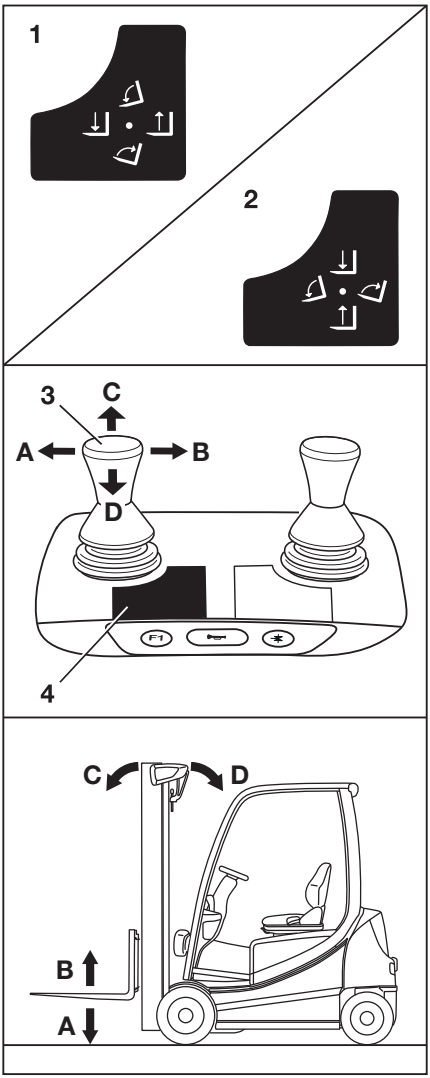

NOTE

- *The truck is configured at the factory in accordance with the adhesive label (1). The following steps for moving the fork carriage and lift mast are based on this configuration.*
- *The configuration according to the adhesive label (2) with reversed functional axes can be ordered as a variant.*

Lifting/lowering the fork carriage

To lift the fork carriage:

– Move the "lift mast" 360° lever (3) in the direction of the arrow (B).

To lower the fork carriage:

– Move the "lift mast" 360° lever (3) in the direction of the arrow (A).

Tilting the lift mast

To tilt the lift mast forwards:

– Move the "lift mast" 360° lever (4) in the direction of the arrow (C).

To tilt the lift mast backwards:

– Move the "lift mast" 360° lever (4) in the direction of the arrow (D).

Movements of the lifting system and meanings of the pictograms

A Lowering
B Lifting
C Tilting forwards
D Tilting backwards

Controlling the lifting system using a triple mini-lever ▷

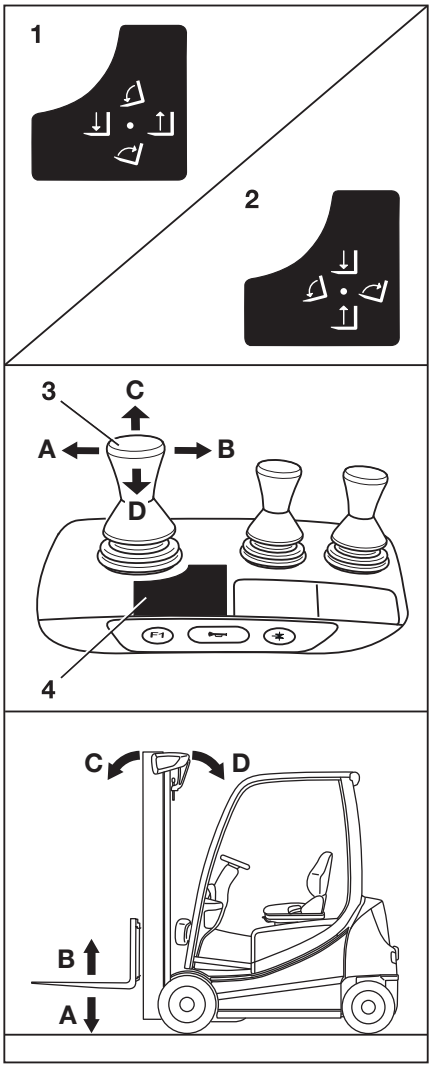

⚠ DANGER

Reaching into or climbing between moving parts of the truck (e.g. lift mast, sideshifts, working equipment, load carrying devices etc.) can lead to serious injury or death and is therefore prohibited.

– Observe the safety regulations for handling loads.
– Operate the lifting system from the driver's seat only.

⚠ WARNING

Risk of accident as a result of an operating error!

These operating instructions describe how to operate the lifting system in the factory configuration.

If the authorised service centre has configured a different configuration, the newly applied pictograms must be observed to ensure safe operation. The operating company must make all drivers aware of the fact that a different configuration has been configured.

– Observe the pictograms on the operating levers.
– Before use, check that the hydraulic functions are working correctly.

The lifting, lowering and tilting movements of the lift mast are controlled using the "lift mast" 360° lever (3). The adhesive label bearing the pictograms for the hydraulic functions (1) or (2) is affixed at the designated point (4).

The pictograms are arranged according to the direction of movement of the "lift mast" 360° lever (3).

NOTE

The truck is configured at the factory in accordance with the adhesive label (1). The following steps for moving the fork carriage and lift mast are based on this configuration.

Lifting/lowering the fork carriage

To lift the fork carriage:

– Move the "lift mast" 360° lever (3) in the direction of the arrow (B).

To lower the fork carriage:

– Move the "lift mast" 360° lever (3) in the direction of the arrow (A).

Tilting the lift mast

To tilt the lift mast forwards:

– Move the "lift mast" 360° lever (4) in the direction of the arrow (C).

To tilt the lift mast backwards:

– Move the "lift mast" 360° lever (4) in the direction of the arrow (D).

Movements of the lifting system and meanings of the pictograms

A Lowering
B Lifting
C Tilting forwards
D Tilting backwards

Controlling the lifting system using a quadruple mini-lever ▷

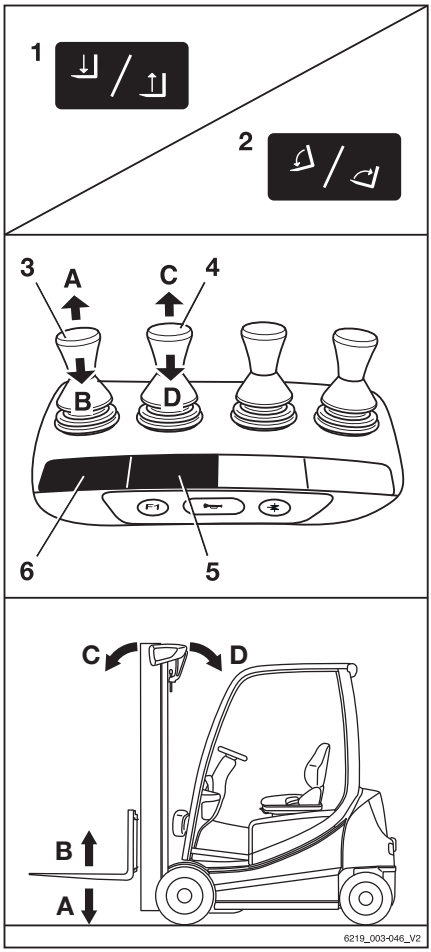

⚠ DANGER

Reaching into or climbing between moving parts of the truck (e.g. lift mast, sideshifts, working equipment, load carrying devices etc.) can lead to serious injury or death and is therefore prohibited.

- Observe the safety regulations for handling loads.
- Operate the lifting system from the driver's seat only.

⚠ WARNING

Risk of accident as a result of an operating error!

These operating instructions describe how to operate the lifting system in the factory configuration.

If the authorised service centre has configured a different configuration, the newly applied pictograms must be observed to ensure safe operation. The operating company must make all drivers aware of the fact that a different configuration has been configured.

- Observe the pictograms on the operating levers.
- Before use, check that the hydraulic functions are working correctly.

The lifting and lowering movements of the lift mast are controlled using the "lift-lower" operating lever (3). The adhesive label bearing the corresponding pictograms (1) is affixed at the designated point (6).

The tilting movement of the lift mast is controlled using the "tilting" operating lever (4). The adhesive label bearing the corresponding pictograms (2) is affixed at the designated point (5).

The pictograms are arranged according to the directions of movement of the operating lever (3) or (4).

Lifting/lowering the fork carriage

To lift the fork carriage:

- Move the "lifting/lowering" operating lever (3) in the direction of the arrow (B).

To lower the fork carriage:

– Move the "lifting/lowering" operating lever (3) in the direction of the arrow (A).

Tilting the lift mast

To tilt the lift mast forwards:

– Move the "lift mast" operating lever (4) in the direction of the arrow (C).

To tilt the lift mast backwards:

– Move the "lift mast" operating lever (4) in the direction of the arrow (D).

Movements of the lifting system and meanings of the pictograms

A Lowering
B Lifting
C Tilting forwards
D Tilting backwards

Controlling the lifting system using the Joystick 4Plus

⚠ DANGER

Reaching into or climbing between moving parts of the truck (e.g. lift mast, sideshifts, working equipment, load carrying devices etc.) can lead to serious injury or death and is therefore prohibited.

– Observe the safety regulations for handling loads.

– Only operate the lifting system from the driver's seat.

Lifting/lowering the fork carriage

To lift the fork carriage:

– Pull the Joystick 4Plus (1) backwards (B).

To lower the fork carriage:

– Push the Joystick 4Plus (1) forwards (A).

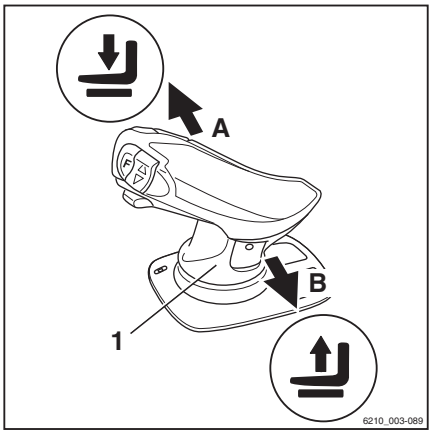

Tilting the lift mast

To tilt the lift mast forwards:

– Tilt the horizontal rocker button (2) to the left (C).

To tilt the lift mast backwards:

– Tilt the horizontal rocker button (2) to the right (D).

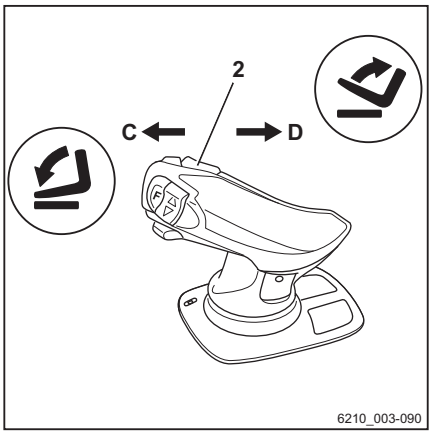

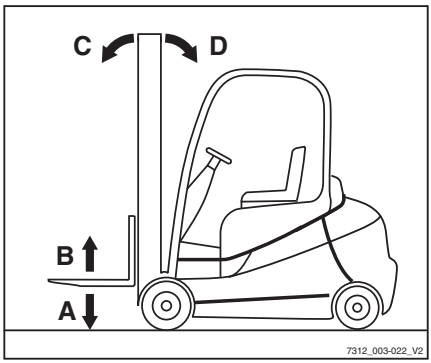

Fork carriage sideshift

To move the fork carriage to the left:

– Push the Joystick 4Plus (1) to the left (E).

To move the fork carriage to the right:

– Push the Joystick 4Plus (1) to the right (F).

NOTE

The symbols on the Joystick 4Plus indicate the direction of movement of the lift mast or fork carriage.

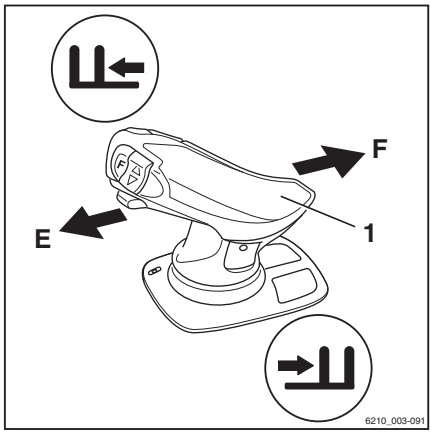

Controlling the lifting system using the Fingertip

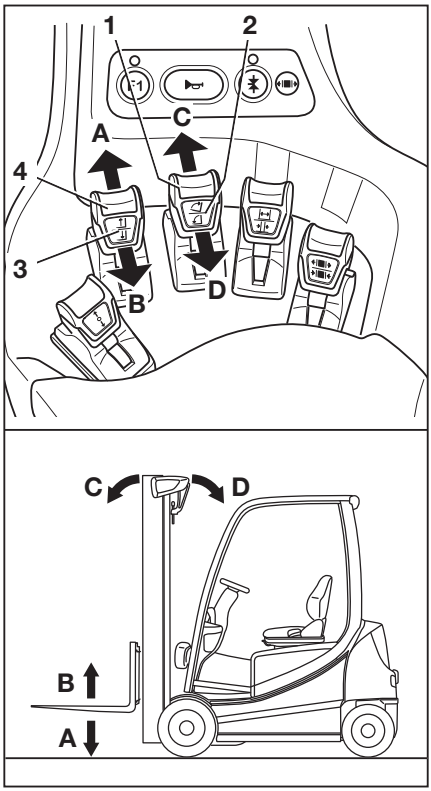

DANGER

Reaching into or climbing between moving parts of the truck (e.g. lift mast, sideshifts, working equipment, load carrying devices etc.) can lead to serious injury or death and is therefore prohibited.

– Observe the safety regulations for handling loads.
– Operate the lifting system from the driver's seat only.

WARNING

Risk of accident as a result of an operating error!

These operating instructions describe how to operate the lifting system in the factory configuration.

If the authorised service centre has configured a different configuration, the newly applied pictograms must be observed to ensure safe operation. The operating company must make all drivers aware of the fact that a different configuration has been configured.

– Observe the pictograms on the operating levers.
– Before use, check that the hydraulic functions are working correctly.

The lifting and lowering movements of the lift mast are controlled using the "lift-lower" operating lever (4). The adhesive label with the corresponding pictogram (3) is located on the operating lever.

The tilting movement of the lift mast is controlled using the "tilting" operating lever (1). The adhesive label with the corresponding pictogram (2) is located on the operating lever.

The pictograms are arranged according to the directions of movement of the operating lever (4) or (1).

Lifting/lowering the fork carriage

To lift the fork carriage:

– Move the "lifting/lowering" operating lever (4) in the direction of the arrow (B).

To lower the fork carriage:

– Move the "lifting/lowering" operating lever (4) in the direction of the arrow (A).

Tilting the lift mast

To tilt the lift mast forwards:

– Move the "tilting" operating lever (1) in the direction of the arrow (C).

To tilt the lift mast backwards:

– Move the "tilting" operating lever (1) in the direction of the arrow (D).

Movements of the lifting system and meanings of the pictograms

A Lowering
B Lifting
C Tilting forwards
D Tilting backwards

Selecting load programs 1 to 3 ▷

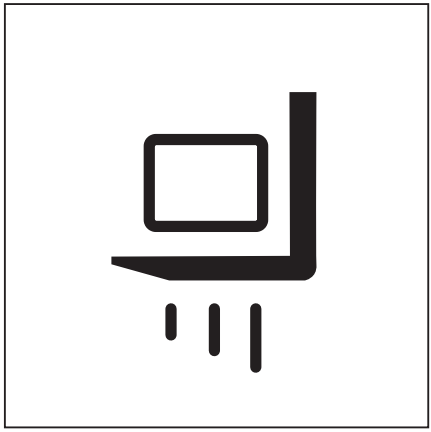

The truck has three load programs for the different lifting behaviours of the fork carriage and the lift mast. The higher the number of the load program selected, the greater the load dynamics.

Differences between the load programs

- 1 Load program 1:
  66% lifting speed
- 2 Load program 2:
  85% lifting speed
- 3 Load program 3:
  100% lifting speed

The lifting behaviour of the truck is selected via the display-operating unit under the menu item.

– Press the 1... softkey to select the desired load program. 3 .

– If the load programs are saved as a favourite on a softkey, press the softkey until the number of the desired load program is shown on the display. ▷

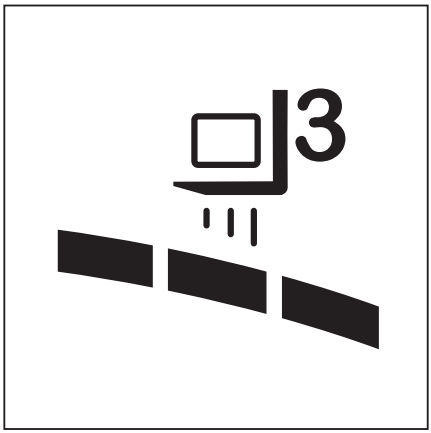

The number of dynamic bar segments shows the load dynamics of the selected load program.

Limiting the load dynamics to load program 1 during the warm-up phase ▷

NOTE

During the warm-up phase, the load dynamics are limited to load program 1. The adjacent symbol appears on the display until the warm-up phase is complete.

– Refer to the section entitled "Warming up the hydraulic oil at cold ambient temperatures" in the chapter entitled "Operation — Checks and tasks before daily use."

Fork wear protection (variant)

The "fork wear protection" variant ensures that the fork arms do not touch the ground. The fork arms are protected against wear and the building floor is protected against damage.

The lift cylinders have in-built fixed stops to prevent the fork arms from hitting the ground. The lower stop makes inserting the forks into a pallet more comfortable.

Mechanical version

Fixed stops in the lift cylinder prevent the fork arms from hitting the ground. No symbol appears in the display-operating unit.

This version cannot be adjusted.

NOTE

The mechanical fork wear protection must be continually adjusted as the wear on the front tyres increases. For help with this, call the authorised service centre.

Changing the fork arms

DANGER

Risk of fatal injury from being run over if the truck rolls away!

- Do not park the truck on a gradient.
- Apply the parking brake.
- Change the fork arms in a separate, safe location on a level surface.

WARNING

There is a risk of injury when changing the fork arms; the weight of the fork arms could cause them to fall on your legs, feet or knees. The space to the left and right of the fork is a danger area.

- Always wear protective gloves and safety footwear when changing the fork arms.
- Ensure that no one stands in the danger area!
- Do not pull on the fork arms.
- The fork arms must always be carried by two people; if necessary, use a hoist.

NOTE

- *For installation and removal, a transport pallet is recommended for supporting the fork arms. The pallet size depends on the fork arm size used and should be dimensioned such that the fork arms do not protrude after being placed on the pallet. This means the fork arms can be safely placed down and transported.*
- *Both fork arms can be pushed over to the same side. It is possible to choose the side via which the forks are removed*

Removal

- Select a pallet corresponding to the fork arm size.
- Set down the pallet next to the fork carriage on the side chosen for removal.
- Lift the fork carriage until the fork arms are approx. 3 cm above the pallet.
- Apply the parking brake.
- Remove the switch key.
- Unscrew the locking screw (2) on the side chosen for removal.
- Pull up the locking lever (1) and push the fork arms onto the pallet one after the other.

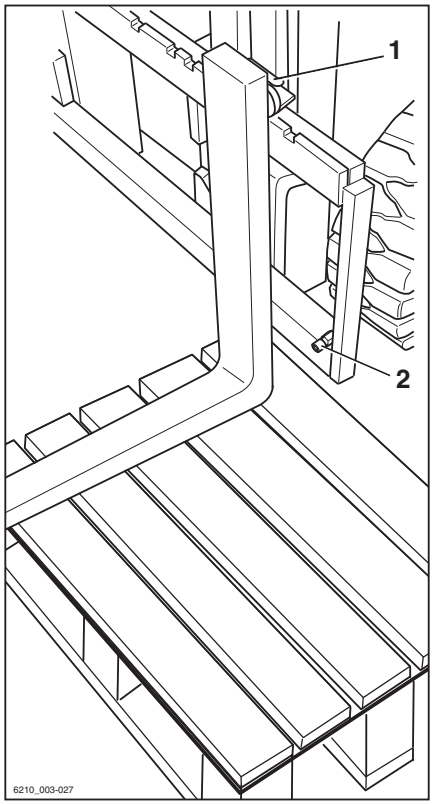

Installation

- Make sure that the locking screw is unscrewed on the side chosen for installation.
- Place the fork arms on a pallet next to the fork carriage on the side chosen for installation.
- Pull up the locking lever (1) and push the fork arms onto the fork carriage one after the other.
- Place the fork arms in the required position and push down the locking lever. Ensure that the locking lever snaps into place.
- Screw in and tighten the locking screw (2).

⚠ DANGER

There is a risk of fatal injury from a falling load or fork!

- Tighten the locking screw each time a fork is changed.
- Driving and moving loads without the locking screw is prohibited.

NOTE

If the truck is equipped with the "load measurement" comfort feature, a "zero adjustment of the load measurement" must always be performed after the fork arms have been changed. Otherwise, correct load measurement cannot be guaranteed.

Fork extension (variant)

⚠ DANGER

There is a risk of fatal injury from being run over if the truck rolls away.

- Do not park the truck on a slope.
- Apply the parking brake.
- Change the fork extension in a cordoned-off, safe location on a level surface.

⚠ WARNING

There is a risk of crushing!

The weight of the fork extension can cause crushing and cuts can be caused by sharp edges or burrs.

- Always wear protective gloves and safety shoes.

⚠ WARNING

There is a risk of tipping!

The weight and dimensions of the fork extension affect the stability of the truck. The permissible weights stated on the capacity rating plate must be reduced in proportion to the actual load distance.

The truck is equipped with a fork extension ex works, the capacity rating plate is already adjusted accordingly.

- Observe the load capacity; see the section entitled "Capacity rating plate" in the chapter entitled "Handling loads".

NOTE

If the truck is equipped with the "load measurement" comfort feature, a "zero adjustment of the load measurement" must always be performed after the fork extensions have been changed. Otherwise, correct load measurement cannot be guaranteed.

Attaching

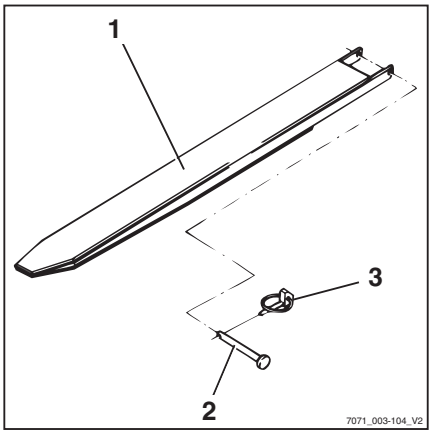

DANGER

Risk of fatal injury from falling load!

At least 60% of the length of the fork extension must lie on the fork arm. No more than 40% of the length of the fork extension may overhang the end of the fork arm. In addition, the fork extension must be secured against slipping from the fork arm.

If the fork extension (1) is not secured with a securing bolt (2) and linch pin (3), the load may fall along with the fork extension.

- Push the fork extension all the way to the back of the fork.
- Make sure that 60% of the length of the fork extension is on the fork arm.
- Always secure the fork extension with a securing bolt.
- Always secure the securing bolt with a linch pin.

- Remove the linch pin (3) from the securing bolt (2).
- Remove the securing bolt from the fork extension (1).
- Push the fork extension onto the fork arms until it is flush with the fork back.
- Insert the securing bolt located behind the fork back fully into the fork extension.
- Insert the linch pin into the securing bolt and secure.

Removing

- Remove the linch pin (3) from the securing bolt (2).
- Remove the securing bolt from the fork extension (1).
- Pull the fork extension from the fork arms.
- Insert the securing bolt fully into the fork extension.
- Insert the linch pin into the securing bolt and secure.

Operation with reversible fork arms (variant) ▷

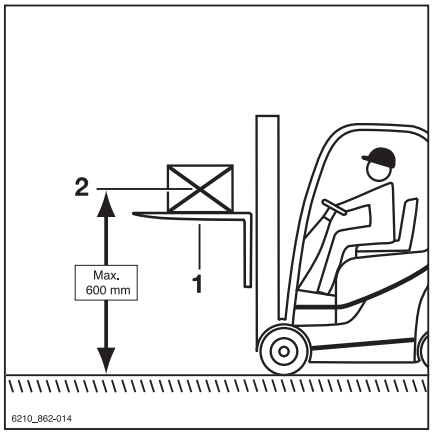

⚠ DANGER

Risk to life from falling load!

Standard fork arms are not structurally designed for reverse operation. If this instruction is not observed, it can lead to material failure and the load falling.

– Only work in reverse operation using reversible fork arms (1)

⚠ WARNING

Risk of accident from slipping load!

Loads may slip on the reversible fork arms if there is no load support. A fork extension (variant) cannot be secured against slipping.

– Do not use a fork extension (variant)

⚠ WARNING

Risk of accident from the truck tipping over.

When driving, the centre of gravity of the load (2) must not be higher than 600 mm above the ground. The truck may tip forwards when driving or braking.

– Only drive with a load centre of gravity up to a max. of 600 mm above the ground

NOTE

If the truck is equipped with the "load measurement" comfort feature, a "zero adjustment of the load measurement" must always be performed after the reversible fork arms have been changed. Otherwise, correct load measurement cannot be guaranteed.

Lifting

Reversible fork arms (1) can be used to reach an additional lift height. The reversible fork arms are installed on the fork carriage in the same manner as standard fork arms. Loads may be lifted on and beneath the reversible fork arms. The mast is lifted and tilted in the same manner. ▷

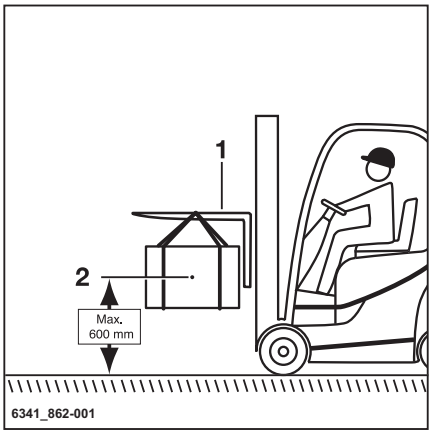

- Only work in reverse operation using reversible fork arms
- Do not use a fork extension (variant)
- If the "load measurement" comfort feature is available, perform a "zero adjustment of the load measurement"
- To drive, raise the load centre of gravity (2) to a max. of 600 mm above the ground
- Observe the information in the section entitled "Transporting suspended loads"

Handling loads

Safety regulations when handing loads ▷

The safety regulations for handling loads are shown in the following sections.

⚠ DANGER

There is a risk to life caused by falling loads or if parts of the truck are being lowered.

- Never walk or stand underneath suspended loads or raised fork arms.
- Never exceed the maximum load indicated on the capacity rating plate. Otherwise stability cannot be guaranteed!

⚠ DANGER

Risk of accident from falling or crushing!

- Do not step onto the forks.
- Do not lift people.
- Never grab or climb on moving parts of the truck.

⚠ DANGER

Risk of accident from a falling load!

- When transporting small items, attach a load safety guard (variant) to prevent the load from falling on the driver.
- Use a closed roof covering (variant) in addition.

Capacity rating plate

The load capacity indicated for the truck on the capacity rating plate must not be exceeded. The load capacity is influenced by the load centre of gravity, the lift height, the attachment or fork arms used and the tyres.

- The position of the capacity rating plate can be taken from the "labelling points".

⚠ DANGER

Risk of fatal injury from the truck losing stability!

Never exceed the load capacity indicated on the capacity rating plate. This applies to compact and homogeneous loads. If these values are exceeded, the stability and rigidity of the fork arms and lift mast cannot be guaranteed.

Improper or incorrect operation or the placement of persons to increase load capacity is prohibited.

The attachment of additional weights to increase the load capacity is prohibited.

⚠ DANGER

Risk of death due to misinterpretation of the capacity rating plate!

Only the capacity rating plates on the truck are valid.

The figures show examples.

– Only observe the capacity rating plate on the truck.

⚠ DANGER

Risk of fatal injury from the truck losing stability!

If the permissible loading of the attachments (variant) and the reduced load capacity of the truck and attachment combination is exceeded, there is a risk of loss of stability.

– The permissible loading of the attachments (variant) and the reduced load capacity of the combination of truck and attachment must not be exceeded.
– Observe the information given on the special capacity rating plates on the truck and attachment.

Basic capacity rating plate

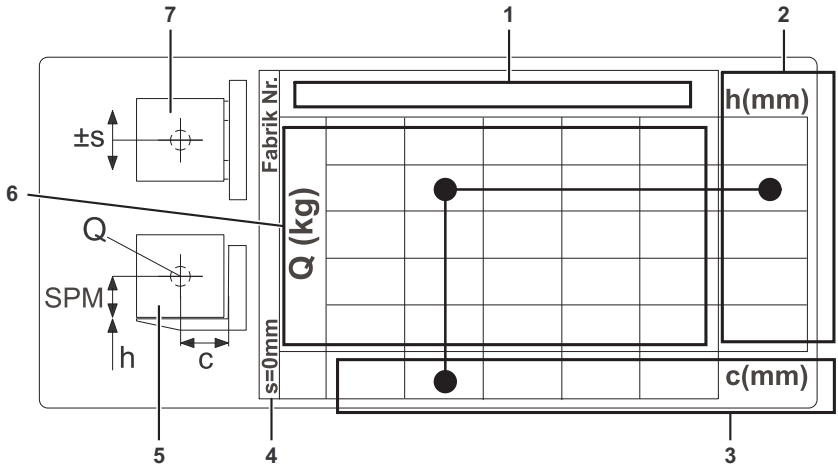

Basic capacity rating plate

1 Designation of the lifting accessories (fork arms or attachment)
2 Lift height "h" [mm]
3 Distance "c" to load centre of gravity from fork back [mm]
4 Sideshift "s" [mm]
5 Side view of load and lifting accessories
6 Load capacity [kg]
7 Top view of load and lifting accessories

There is always at least one capacity rating plate on the truck: the basic capacity rating plate. It shows the load capacity only for fork arms without the attachment. If an attachment is attached, a second capacity rating plate is fitted: the residual load capacity rating plate. This plate shows the load capacity taking the attachment into account. In the case of integrated attachments, only a basic capacity rating plate is created as the integrated devices cannot be easily removed from the truck.

Typical application of a capacity rating plate

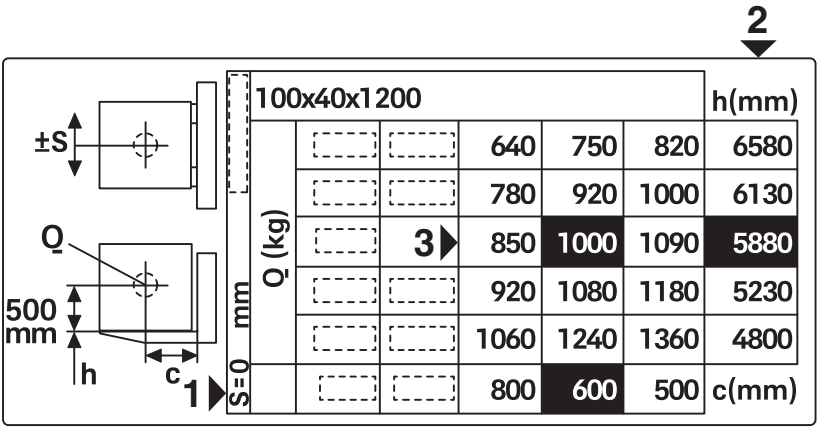

100x40x1200					h(mm)
		640	750	820	6580
		780	920	1000	6130
		850	1000	1090	5880
		920	1080	1180	5230
		1060	1240	1360	4800
		800	600	500	c(mm)

The **example values** used here are **marked in black**.

– To determine the actual load capacity, observe the basic capacity rating plate on the truck.

Illustration of the typical application on the truck

The position numbers in the adjacent graphic correspond to the position numbers on the basic capacity rating plate.

1 Distance between the load centre of gravity and the fork back: 600 mm
2 Permissible lift height: 5880 mm
3 Weight of load to be lifted: 1000 kg

The distance between the load centre of gravity and the fork back is 600 mm (1). The lift height should be 5880 mm (2).

This means that the load must not exceed 1000 kg (3) (load capacity).

By implication, this means that, in this example with the distance between the load centre of gravity and the fork back being 600 mm, a 1000-kg load must not be lifted higher than 5880 mm.

The load capacity specified for certain nominal lifts applies up to this nominal lift. If the lift value of the first line is exceeded, the load capacity from the second line applies up to the lift of the second line.

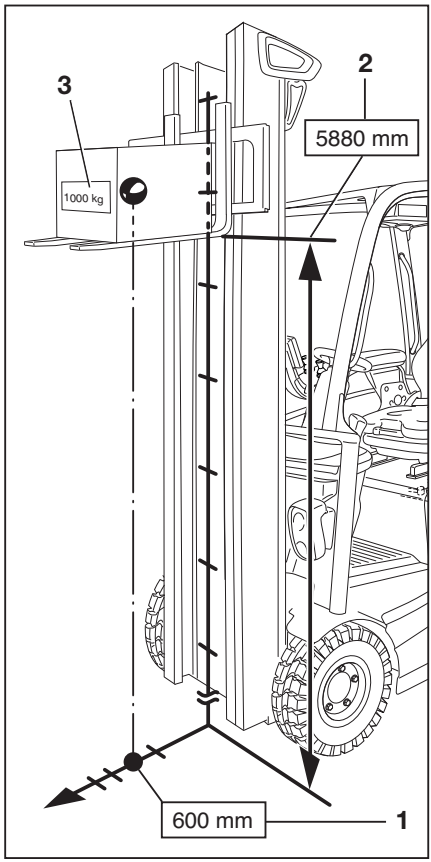

Residual load capacity rating plate for built-in devices and attachments

NOTE

The residual load capacity rating plate for attachments is read according to the same diagram as in the example for the basic capacity rating plate.

Some attachments have a standard sideshift or a large sideshift. As a rule, the standard sideshift is ±100 mm and the large sideshift is 230 mm.

In contrast to the large sideshift, the standard sideshift offers a higher load capacity, but only within the scope of the specified standard sideshift.

A large sideshift enables a strongly off-centre load position. If the load is severely off-centre, the load capacity of the truck will be greatly reduced.

Since non-integrated attachments can be replaced, multiple residual load capacity rating plates for attachments on one truck are possible. The residual load capacity rating plate then applies to the attachment fitted. In the case of integrated attachments, only the applicable capacity rating plate is fitted to the truck.

– If there is a built-in device or attachment with a large sideshift on the truck, take into account the maximum possible sideshift on the capacity rating plate.

▷

XZP150+100x40x1200						h(mm)
S=230mm	Q (kg)		220	260	290	6580
			430	510	560	5870
			500	590	650	5230
			570	670	740	4750
			780	920	1000	4100
			800	600	500	c(mm)

Residual load capacity rating plate for large sideshift, S = 230 mm

A second residual load capacity rating plate for the same attachment but with standard sideshift (usually ±100 mm) may also be fitted on the truck. This residual load capacity rating plate offers a higher load capacity, but only within the scope of the specified standard sideshift. If the standard sideshift is exceeded, the residual load capacity rating plate applies to the maximum possible sideshift. The driver is responsible for complying with the

load capacity and sideshift information on the residual load capacity rating plate. If in doubt, use the load capacity for the maximum possible sideshift.

▷

XZP150+100x40x1200						h(mm)
S=100mm	Q (kg)		430	510	560	6580
			570	670	740	6130
			640	750	820	5880
			710	840	880	5230
			850	1000	1090	4800
			800	600	500	c(mm)

Residual load capacity rating plate for standard sideshift, S = 100 mm

Special capacity rating plate for off-centre loads

If unbalanced loads are regularly transported, a special capacity rating plate for off-centre loads is required. If this plate is required at a later date, contact the authorised service centre. This requires information on the type and appearance of the load.

Picking up loads

To make sure that the load is securely supported, it must be ensured that the fork arms are

sufficiently far apart and are positioned as far as possible under the load.

If possible, the load should rest on the back of the fork.

The load must not protrude too far over the fork tips, nor should the fork tips protrude too far out from the load.

Loads are to be picked up and transported as close to the middle as possible.

⚠ DANGER

Risk of accident from a falling load!

When transporting small items, attach a load safety guard (variant) to prevent the load from falling on the driver.

A closed roof covering (variant) should also be used.

Removable roof panels may not be removed.

Adjusting the fork

▷

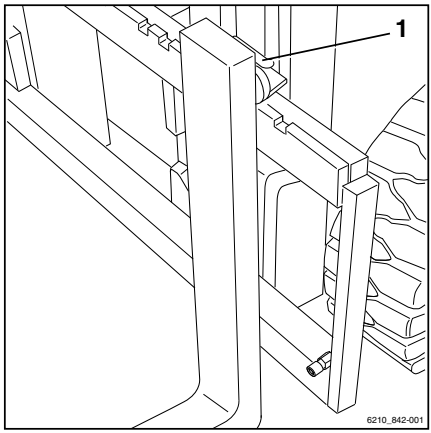

– Lift the locking lever (1) and move the fork arms to the desired position.

– Allow the locking lever to snap back into place.

The load centre of gravity must be midway between the fork arms.

– Only actuate the fork prong positioner (variant) when the fork is not carrying a load.

Danger area

The danger area is the area in which people are at risk due to the movements of the truck, its working equipment, its load-carrying equipment (e.g. attachments) or the load. Also included are the areas where loads could fall or working equipment could fall or be lowered.

⚠ DANGER

Risk of injury!

– Do not step on the fork.

⚠ DANGER

Risk of injury!

– Do not step under the raised forks.

⚠ DANGER

People may be injured in the danger area of the truck!

The danger area of the truck must be completely clear of all personnel, except the driver in his normal operating position. If persons fail to leave the danger area despite warnings:

– Cease work with the truck immediately.

– Secure the truck against use by unauthorised parties.

⚠ DANGER

Danger of death from falling loads!

– Never walk or stand underneath suspended loads.

Transporting pallets

As a rule, loads (e.g. pallets) must be transported individually. Transporting multiple loads at the same time is only permitted:

- when instructed by the supervisor and
- when the technical requirements have been met.

The driver must ensure proper condition of the load. Only safely and carefully positioned loads may be transported.

▷

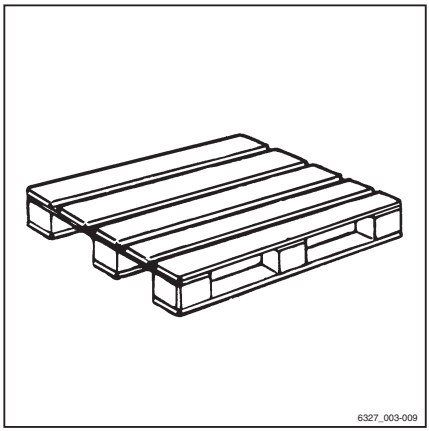

Transporting suspended loads ▷

Before transporting suspended loads, consult the national regulatory authorities (in Germany, the employer's liability insurance associations).

National regulations may place restrictions on these operations, e.g. in Italy. Contact the relevant authorities.

If there are no country-specific regulations for suspended loads in the country of use, the following instructions for safe handling must be observed.

⚠ DANGER

Suspended loads that begin to swing can result in the following risks:

- Impaired braking and steering movement
- Tipping over the load wheels or drive wheels
- Tipping the truck at right angles to the drive direction
- Risk of crushing of guide persons
- Reduced visibility

⚠ DANGER

Loss of stability!

Slipping or swinging suspended loads can lead to a loss of stability and cause the truck to tip over.

– When transporting suspended loads, observe the following instructions.

Instructions for transporting suspended loads:

- Swinging loads must be prevented by using the proper driving speed and driving style (careful steering, braking).
- Hanging loads must be hooked on to the truck in such a way that the harness cannot shift or release unintentionally and cannot be damaged.
- When transporting suspended loads, suitable aids (e.g. guy wires or supporting poles) must be available so that accompanying persons can guide suspended loads and prevent the loads from swinging.

- Take particular care to ensure that there is no one in the drive direction in the driving lane.
- If, despite this, the load begins to swing, ensure that no person is placed at risk.

⚠ DANGER

Risk of accident!

When transporting suspended loads, never perform or end driving and load movements abruptly.

Never drive on slopes with a suspended load.

Transporting containers holding fluids as hanging loads is not permitted.

Picking up a load

⚠ DANGER

There is a risk to life caused by a falling load or if parts of the truck are being lowered.

– Never walk or stand underneath suspended loads or raised fork arms.

– Never exceed the maximum load values specified on the capacity rating plate. Otherwise, stability cannot be guaranteed.

– Only store pallets that do not exceed the specified maximum size. Damaged loading equipment and incorrectly formed loads must not be stored.

– Attach or secure the load to the lifting accessory so that the load cannot move or fall.

– Store the load so that the specified aisle width is not reduced by protruding parts.

– Approach the rack carefully, brake gently and stop just in front of the rack.

▷

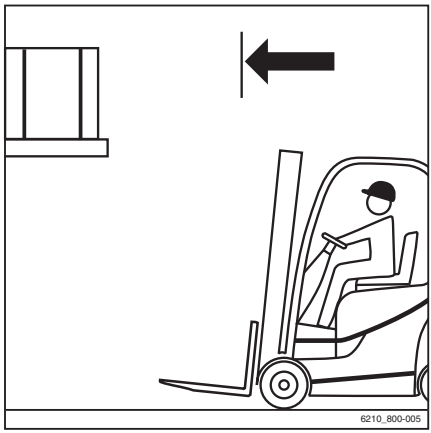

– Position the forks.
– Set the lift mast to vertical.
– Lift the fork carriage to the stacking height.

▷

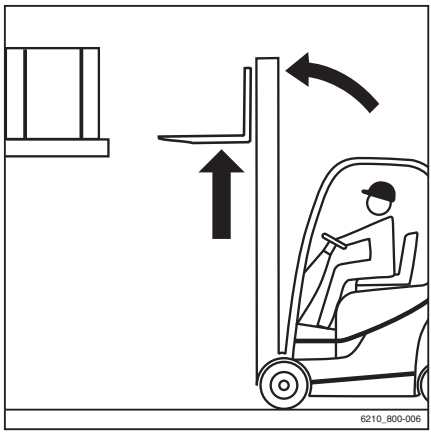

⚠ CAUTION

Risk of component damage!

Ensure that the rack and load do not become damaged when inserting the fork into the rack.

– Insert the fork as far under the load as possible. Stop the truck as soon as the fork back is resting on the load. The load centre of gravity must be midway between the fork arms. ▷

– Lift the fork carriage until the load is resting entirely on the fork. ▷

⚠ DANGER

Risk of accident!

– Beware of any people in the danger area.
– Ensure that the roadway behind you is clear.

⚠ DANGER

Due to the risk of tipping, never tilt the lift mast with a raised load!

– Lower the load before tilting the lift mast.

– Reverse carefully and slowly until the load is clear of the rack. Brake gently.

– Lower the load while maintaining ground clearance. ▷

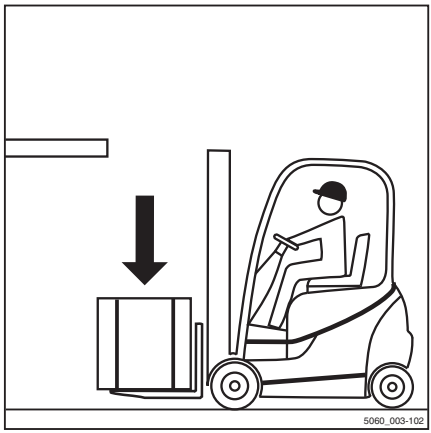

– Tilt the lift mast backwards. ▷

The load can be transported.

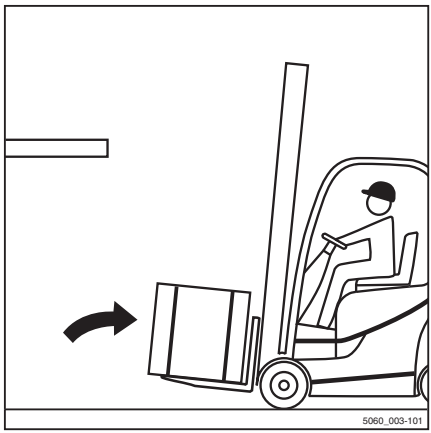

Transporting loads

NOTE

Observe the information in the chapter entitled "Safety regulations when driving".

DANGER

The higher a load is lifted, the less stable it becomes. The truck can tip over or the load can fall, increasing the risk of accident!

Driving with a raised load and the lift mast tilted forward is not permitted.

- Only drive with the load lowered.
- Lower the load until ground clearance is reached (not over 300 mm).
- Only drive with the lift mast tilted backwards.

- Drive slowly and carefully round corners!

NOTE

Observe the information in the chapter entitled "Steering".

- Always accelerate and brake gently!

NOTE

Observe the information in the chapter entitled "Operating the service brake".

– Never drive with a load protruding to the side (e.g. with the sideshift)!

▷

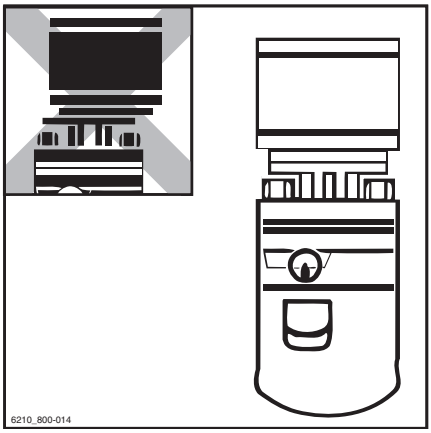

Determining visibility conditions when driving with a load

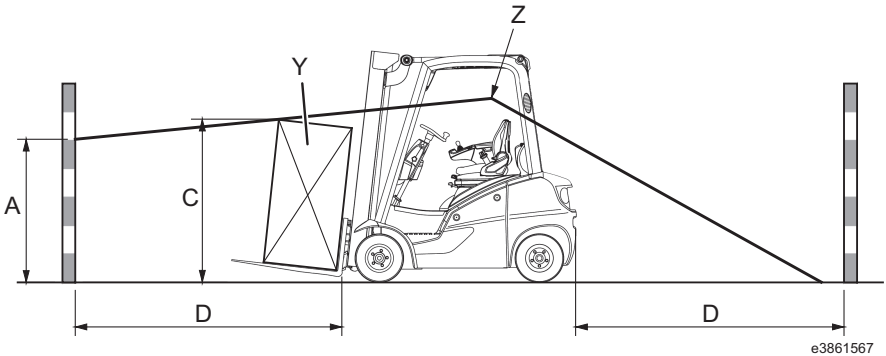

A	Area that is not visible (max. 1085 mm)	Y	Load (varies depending on operator)
C	Load height (in driving position)	Z	Driver's eye level
D	4000 mm (distance to the front from the rear corner of the load when it is positioned on the fork carriage in the driving position)		

The driver's field of vision can be severely limited when driving with a larger load or with attachments fitted. In this case, safe operation is no longer guaranteed.

Visibility conditions can be evaluated by determining the size of the area that is not visible (A).

Procedure:

- The driver moves into position in his seat.
- The area that is not visible (A) is determined based on the load (Y) and the length of the route (D).
- If the area that is not visible exceeds 1085 mm (EN16842-2/A3), the visibility conditions are inadequate.

In the case of inadequate visibility conditions, the following measures are possible:

- Reverse travel (see illustration)
- Splitting the loads
- Optimising the transport routes
- Using support staff, e.g. as a guide

The operating company must complete a risk analysis in order to evaluate visibility obstructions that may be encountered during operation.

The risks of poor visibility due to the load must be weighed against the risk of health-related consequences due to the upper body being twisted during reverse travel.

A rotary seat can be used to assist the driver when reversing.

Contact your service partner.

NOTE

Any applicable national regulations must be observed.

Setting down loads

DANGER

Risk of accident due to changed moment of tilt!

The load centre of gravity and the moment of tilt move due to tilting the lift mast forwards with a raised load or due to the load slipping. The truck may tip forwards.

– Only tilt the lift mast forwards with a raised lifting accessory when it is directly above the stack.
– When the lift mast is tilted forwards, take particular care to ensure that the truck does not tip forwards and that the load does not slip.

⚠ WARNING

Risk of accident from a falling load!

If the fork or the load remains suspended during lowering, the load may fall.

– When removing from stock, move the truck far enough back so that the load and the fork can be lowered freely.

– Drive up to the stack with the load lowered in accordance with regulations. ▷

– Set lift mast to vertical.

– Lift the load to the stacking height.

– Drive the truck towards the rack carefully.

– Lower the load until it rests securely on the rack. ▷

⚠ DANGER

Risk of accident!

– Beware of any people in the danger area.

– Ensure that the roadway behind you is clear.

– Move the truck back until the fork arms can be lowered without touching the stack.

– Lower the fork while maintaining ground clearance.

– Tilt the lift mast backwards and drive away.

Driving on ascending and descending gradients

⚠ DANGER

Risk of fatal injury!

Driving on ascending and descending gradients carries special dangers!

– Always follow the instructions below.

– On ascending and descending gradients, the load must be carried facing uphill.
– It is only permitted to drive on ascending and descending gradients that are marked as traffic routes and that can be used safely.
– Ensure that the ground to be traversed is clean and provides a good grip.
– Do not turn on ascending and descending gradients.
– Do not drive onto or along ascending and descending gradients at an angle.
– Do not park the truck on ascending or descending gradients.
– In case of emergency, secure the truck with wedges so that the truck does not roll away.
– Reduce the driving speed on descending gradients.
– Do not drive downhill faster than the truck can drive uphill on the same gradient.
– Determine the maximum permissible speed with a test drive uphill, if necessary.

It is not permitted to drive on long ascending and descending gradients greater than 15% due to the specified minimum braking and stability values.

– Before driving on ascending and descending gradients greater than 15%, consult the authorised service centre.

The process of placing loads into stock and removing loads from stock while on an ascending or descending gradient is not permitted!

– Always place loads into stock and remove loads from stock on a horizontal plane.

Shake function (variant)

NOTE

The shake function is intended only for short-term use, as it reduces the service life of the load chains due to the increased loading on them.

Description

The shake function of the hydraulics makes it easier for the driver to perform tasks such as emptying containers of bulk material. The shake function moves the fork carriage quickly up and down via the "Lifting" function.

This function may only be used for a limited load and must not be used with a full nominal load.

Maximum permissible load for the shake function:

- Maximum 30% of the nominal load. If an attachment is being used, its weight must be subtracted from this value.

NOTE

The weight of an attachment can be seen on its nameplate.

Operation

To activate the shake function:

– Move the corresponding operating device for the "Lifting" function over the zero position four times in quick succession.

The fork carriage moves as normal. The shake function is active after the fourth time the operating device is moved.

– Continue to move the operating device back and forth.

The fork carriage moves up and down more quickly and more jerkily.

The intensity of the shaking is controlled via the vigour with which the operating device is moved. The more vigorously and frequently the operating device is moved, the more intense the shaking is.

NOTE

Once the function has been activated, the driver has two seconds to start the shaking. If two seconds elapse without the shake function being used, the shake function is deactivated again.

WARNING

The shake function remains active for two seconds following activation.

If the driver simply wants to lift or lower the load during this time, note that the fork carriage may move significantly more jerkily with the load than in normal operation. If the two seconds elapse without the shake function being used, the fork carriage can be moved normally again with the load.

WARNING

Risk of accident due to unintentional switch-off of the intermediate lift cut-out.

If the truck is also equipped with the "intermediate lift cut-out" variant and the shake function is performed close to an intermediate lift cut-out lift limit, this may inadvertently cancel the lift limit.

This can happen if the operating device has to be moved twice in order to cancel the lift limit. If the operating device for the shake function is then repeatedly actuated, this can cancel the lift limit. The fork carriage then moves beyond the lift limit during the shaking process. This can cause the fork carriage to collide with higher objects.

– Do not perform the **shake** function close to the lift height of a lift limit.
– Cancel the lift limit by pressing the "F button". See the note below.

NOTE

The lift limit can be cancelled by pressing the "F button". See also the section entitled "Intermediate lift cut-out (variant)". For this option, contact the authorised service centre.

The following section shows how the shake function is activated via the standard

assignment for "lifting/lowering" using the different variants of the operating devices. If the "lifting/lowering" function is assigned differently on the operating device, the shake function is activated via this other assignment.

Joystick 4Plus:

– Move the Joystick 4Plus (1) back and forth between positions (A) and (B) four times. Then continue to move the component in the same way.

▷

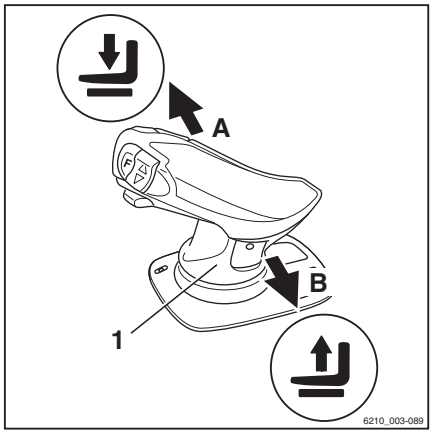

Double mini-lever:

– Move the 360° lever (2) back and forth between positions (A) and (B) four times. Then continue to move the component in the same way.

▷

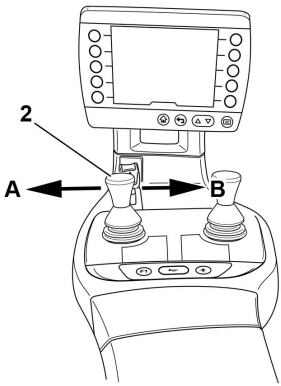

Triple mini-lever: ▷

– Move the 360° lever (3) back and forth between positions (A) and (B) four times. Then continue to move the component in the same way.

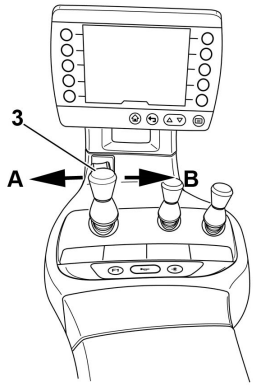

Quadruple mini-lever: ▷

– Move the operating lever (4) back and forth between positions (A) and (B) four times. Then continue to move the component in the same way.

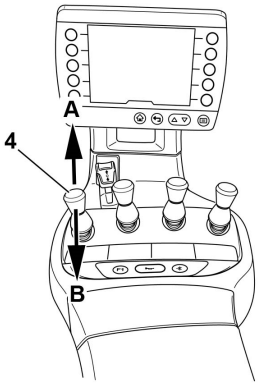

Fingertip: ▷

– Move the operating lever (5) back and forth four times. Then continue to move the component in the same way.

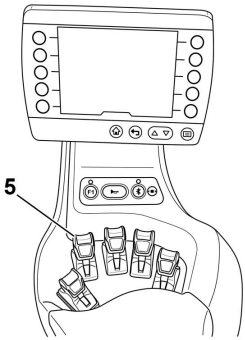

Driving on lifts

The driver may only use this truck on lifts with a sufficient rated capacity and for which the operating company has been granted authorisation.

⚠ DANGER

There is a risk to life if you are crushed or run over by the truck.

- There must be no personnel already in the lift when the truck is driven into the lift.
- Personnel are only permitted to enter the lift once the truck is secure, and must exit the lift before the truck is driven out.

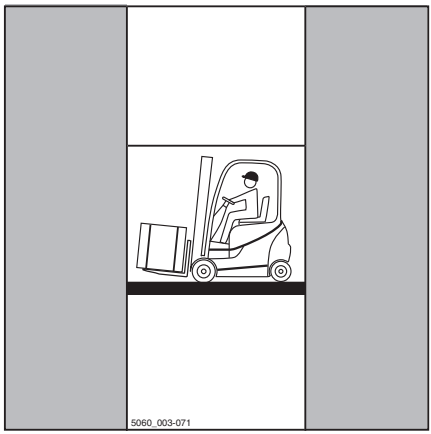

Determining the actual total weight

- Park the truck securely.
- Determine the unit weights by reading the truck nameplate and, if necessary, the attachment (variant) nameplate and, if necessary, by weighing the load to be lifted.
- Add the determined unit weights to obtain the actual total weight of the truck:

  Tare weight (1)

  \+ Ballast weight (variant) (2)

  \+ Attachment net weight (variant)

  \+ Weight of the load to be lifted

  \+ 100 kg allowance for driver

  = Actual total weight

- Drive the truck with the forks forwards into the lift without touching the shaft walls.
- Park the truck securely in the lift to prevent uncontrolled movements of the load or the truck.

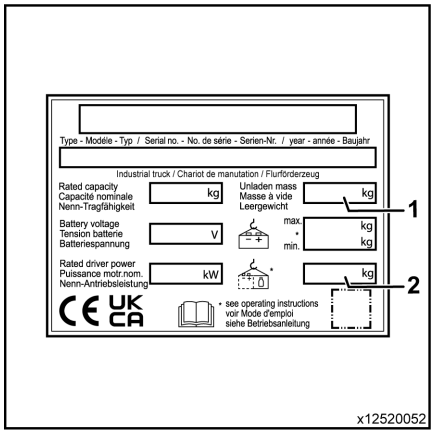

Driving on loading bridges

DANGER

Risk of accident if the truck crashes!

Steering movements can cause the tail end to veer off the loading bridge towards the edge. This may cause the truck to crash.

The lorry driver and the truck driver must agree on the lorry's departure time.

- Before driving across a loading bridge, ensure that it is properly attached and secured and has a sufficient load capacity (lorry, bridge etc.).
- Drive slowly and with care on the loading bridge.
- Ensure that the vehicle onto which you will be driving is secured to prevent it from shifting and that it can support the load of the truck.

Determining the actual total weight

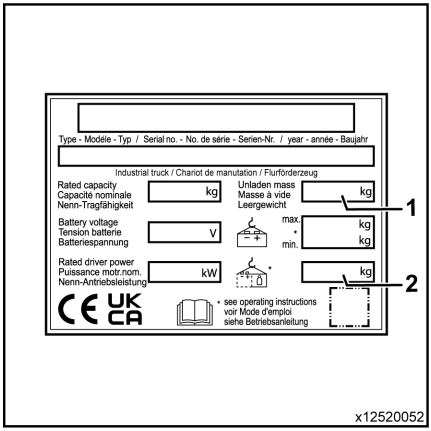

- Park the truck securely.
- Determine the unit weights by reading the truck nameplate and, if necessary, the attachment (variant) nameplate and, if necessary, by weighing the load to be lifted.
- Add the determined unit weights to obtain the actual total weight of the truck:

  Tare weight (1)

  \+ Ballast weight (variant) (2)

  \+ Attachment net weight (variant)

  \+ Weight of the load to be lifted

  \+ 100 kg allowance for driver

  = Actual total weight

Lift height-dependent assistance systems

Optical lift height measuring system (variant)

Design and function

This truck can be fitted with an optical lift height measuring system as a variant. This system is a prerequisite for the assistance systems described in this chapter. As soon as the truck is switched on, the system is ready for use immediately. This system consists of an LED lift height sensor (2) on the side at the bottom of the lift mast and a reflector (1) on the fork carriage.

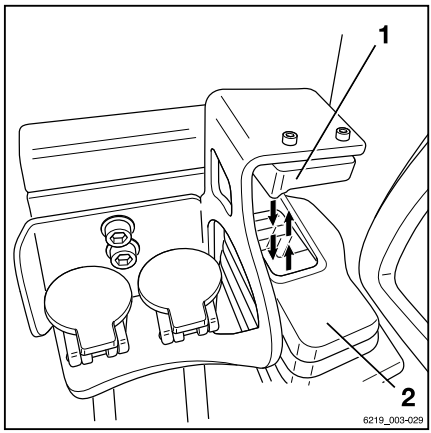

NOTE

The LED/sensor unit and reflector are adjusted at the factory. Follow-up adjustments are carried out by the authorised service centre.

The LED lift height sensor constantly emits a light signal that is reflected by the reflector. The truck control unit calculates the current lift height based on the travel time of the light signal.

NOTE

Although the infrared light of the LED lift height sensor is not dangerous for the human eye, you should avoid looking directly into the light source.

Cleaning

It is recommended that the LED sensor glass (2) and the reflector (1) are checked before starting work and, if required, cleaned. The cleaning frequency depends on the application conditions of the truck. The quality of the light signal may also be reduced as a result of heavy rain or fogging up of the sensor.

If the light signal is too weak, the LED sensor glass (2) and the reflector (1) must be cleaned. Three dashes are shown on the display-operating unit instead of the lift height display.

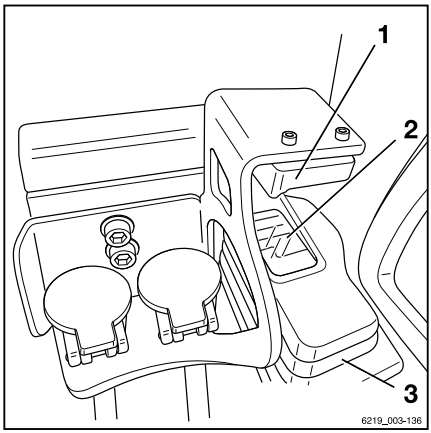

The message `Clean lift height sensor` appears in the display.

– Clean the sensor glass (2) and the reflector (1) using a soft cloth and water.

– Also clean the dust protection cover (3), if necessary.

A small amount of cleaning agent can be added to the water.

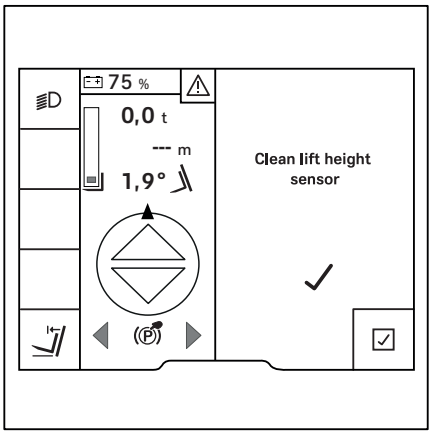

⚠ CAUTION

Component damage caused by incorrect cleaning.

The sensor glass and the reflector can be damaged as a result of incorrect cleaning procedures.

– The components must **not** be cleaned using dry materials.

– Do **not** use agents containing hydrocarbons.

Agents containing hydrocarbons include:

- Acetone
- Methanol
- Ethanol
- Propanol

⚠ CAUTION

Risk of damage to the LED lift height sensor through high-pressure cleaning!

A high-pressure cleaner can damage the LED lift height sensor due to the penetration of water. This can result in incorrect measurements.

– Do **not** direct the spray from a high-pressure cleaner at the LED lift height sensor.

Eliminating malfunctions

NOTE

A misaligned LED lift height sensor or bent reflector must be adjusted only by the authorised service centre.

– If the malfunction in the system persists, please contact the authorised service centre.

If a malfunction occurs, the message `Check lift height sensor and reflector` appears in the display-operating unit. If the malfunction no longer exists or has been rectified, the system is automatically available again.

Truck functions that are dependent on the lift height are restricted in the event of a malfunction in the height measurement system. Malfunctions must therefore be rectified immediately.

Contamination

The driver can resolve a temporary interruption of the light signal due to contamination or foreign objects in the signal path. See the section entitled "Cleaning".

Condensation/icing

If the truck switches between a very cold environment, e.g. in a cold store, and normal surroundings, ice or condensation may form on the sensor. The signal may then briefly fail until the condensation or icing has subsided.

Emergency operation in the event of malfunctions

In the event of a malfunction in the height measurement system, the truck switches to emergency operation.

In emergency operation, the assistance systems listed below that are dependent on the lift height are not available:

- Lift height display
- Fork wear protection
- Lift mast transition damping

Due to the lack of a measured value, the assistance systems that are dependent on the lift height will instead use calculated values for the lift height.

For safety reasons, the calculated value is always below the actual lift height value.

The following assistance systems can continue to be operated, but with the restrictions of emergency operation:

- **Intermediate lift cut-out**

– Release the lifting operating device so that it can return to the zero position.

The fork carriage can then continue lifting at a reduced speed.

- **Lift mast end-stop damping**

– Release the lifting operating device so that it can return to the zero position.

⚠ WARNING

Risk of collision with the hall ceiling.

The fork carriage can now be lifted to the maximum lift height without limitation.

– Take note of the height of the ceiling.

- **Speed reduction when the fork carriage is raised**

The speed reduction activates at a lower lift height than in normal operation.

Lift height display (variant)

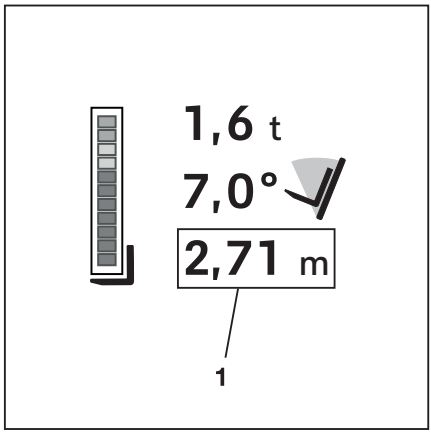

If the truck is equipped with the optical lift height measuring system, the current lift height (1) appears permanently in the display-operating unit.

The lift height displayed corresponds to the height of the bottom edge of the fork arms. If desired, the authorised service centre can set a different value. If a different attachment is installed, the authorised service centre must adjust this value.

The system works across the entire lift range, from ground level up to the maximum lift height.

When properly configured, the measurement inaccuracy is as follows:

Repeatability	±5 mm
Maximum measurement inaccuracy	±45 mm

NOTE

If the prerequisites on the truck have changed, e.g. the tyres are worn, the value displayed for the lift height may differ more from reality. In this case, the lift height display must be zeroed.

– See the section entitled "Zeroing the assistance systems".

easy Target (variant)

"easy Target" is an additional assistance function for the lift height measurement.

With this assistance function, the fleet manager can use their authorisation to define and save regularly approached lift heights. Up to ten different lift heights can be set for ten different areas of the warehouse.

"easy Target" works across the entire fork lift range, from ground level up to the maximum lift height of the truck.

For the various operating devices for the hydraulic functions, the approached lift heights are stored as follows.

- Multi-lever, mini-lever and Fingertip operation:
  Function key
- Joystick 4Plus operation:
  Shift key "F"

For harmonisation, the function key and the shift key "F" are referred to as the "F button" in the next sections.

Configuring easy Target

To use the function, the desired lift heights must be configured. The desired lift heights can be entered directly in the display-operating unit. In addition, the "Automatic mast vertical positioning" variant must be set up.

NOTE

See the sections "Automatic mast vertical positioning" in the subchapter "Tilt angle-dependent assistance systems".

– Stop the truck.

– Actuate the parking brake.

– Activate the "Access authorisation for the fleet manager".

Defining the lift heights by entering them in the display-operating unit

– Press the button.

– Press the softkey.

– Press the `Truck settings` softkey.

– Press the `easy Target` softkey.

A selection with the available areas of the warehouse opens.

– Press the appropriate softkey for the desired area of the warehouse to define a lift height.

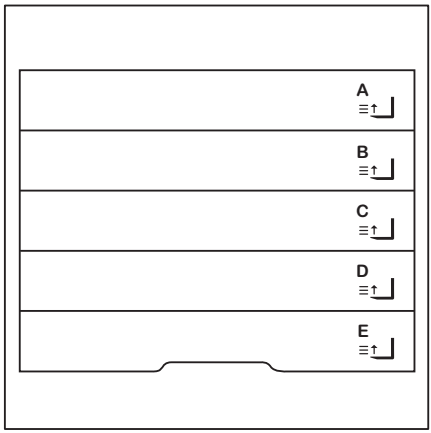

A selection with the lift heights that can be defined for this area of the warehouse opens.

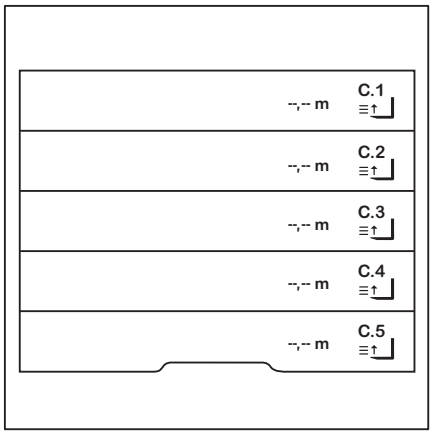

NOTE

This example shows the available, definable lift heights for area "C" of the warehouse. This areas of the warehouse can be name individually by the authorised service centre.

– Press the appropriate softkey for the desired lift height.

In this menu, you can define the desired lift height. ▷

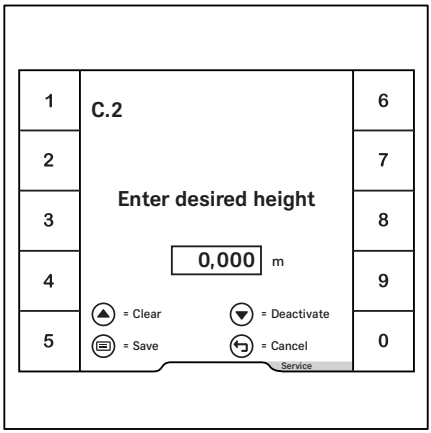

– Enter the lift height using softkeys `0 to 9`.

– To `save`, press the button.

The menu closes. The selection with the lift heights that can be defined for this area of the warehouse opens.

NOTE

The defined areas of the warehouse can also be displayed as a favourite. For information on how to do this, see the original operating instructions for the display-operating unit.

Defining the lift heights by approaching the lift height

– As described in the previous section, select the desired area of the warehouse to define a lift height.

– Release the parking brake and drive to the single pallet position for which the lift height is to be defined.

– Lift the fork carriage to the desired lift height. ▷

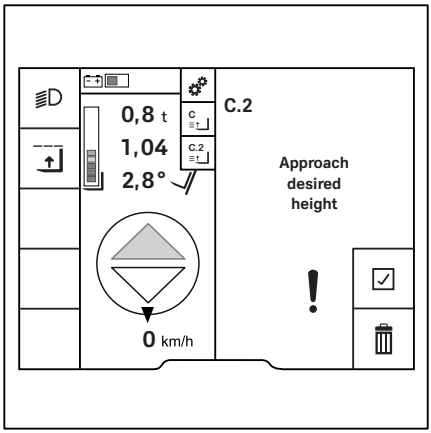

– When the desired lift height is reached, stop the lifting operation.

– To confirm, press the ✓ softkey.

The lift height is stored.

The stored lift height is displayed on the previously selected storage space. ▷

In this example, the lift height is 1.04 m.

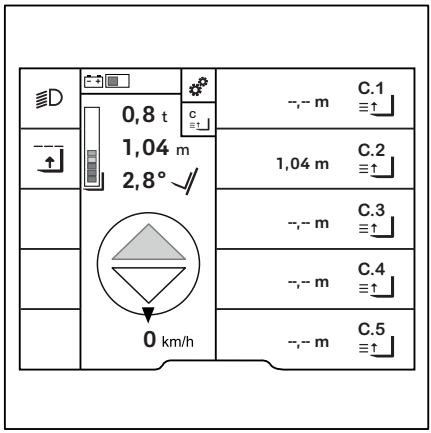

Operating easy Target ▷

To use easy Target, at least one lift height must be stored. The procedure for saving a lift height is described in the section "easy Target Configuration".

Using the "load measurement" function, the truck automatically detects whether there is a load on the fork.

The assistant for placing a load in stock or removing a load from stock detects if the driver wants to store or remove something. In this example, the stock removal assistant (1) is active. The orange activation bar next to the symbol indicates this. To switch to the stock placement assistant, push the softkey next to the symbol.

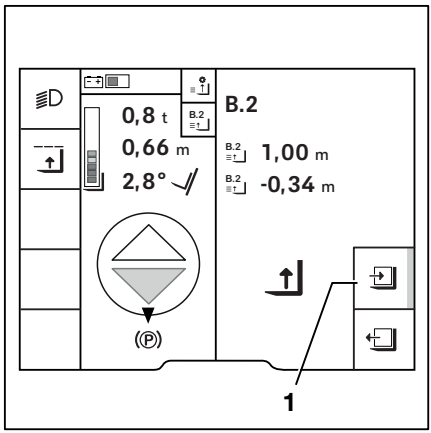

NOTE

If the load is less than 150 kg, the load may not be detected. A stock placement operation is then started.

– In this case, push the softkey to switch to the stock removal assistant.

Select the desired area of the warehouse either in the function menu "Load ▸ easy Target" or via the favourites. The adjacent example shows the selection via a favourite (2).

– Approach the selected lift height of the area of the warehouse with the fork carriage.

The next steps required for this are shown on the display. The symbols described below are used for operation.

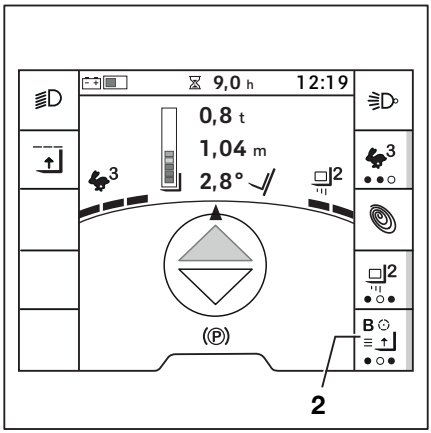

Symbols used and their meanings

	Place in stock
	Remove from stock
	Lift the fork carriage
	Lower the fork carriage
	Retract fork
	Extend fork

Placing the load in stock

The adjacent example shows the direction of movement of lifting (4) to the next stored lift height (3). The distance until the next lift height (5) is reached is displayed after the lift height has been selected.

– Move the operating device for the hydraulic function in the desired direction.

– Press the "F button" and hold it down.

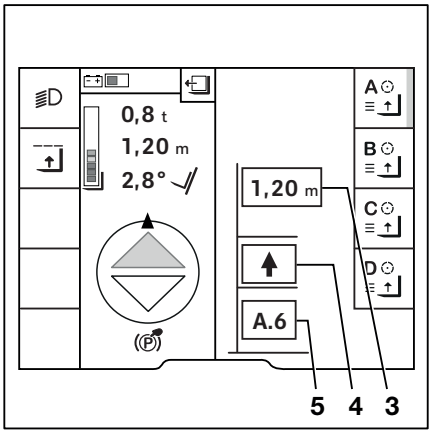

3 Next stored lift height
4 Current direction of movement of the fork carriage
5 Next height in the direction of movement

– When the fork carriage approaches the desired lift height, release the "F button".

The display shows the height of this lift height 1.00 m (6) and the distance of the fork carriage to this lift height 0.00 m (7).

When the lift height is reached, the fork carriage stops automatically.

The orange activation bar next to the "Place in stock" symbol (9) indicates that the stock placement assistant is active.

The stock placement assistant gives the instruction:

– Move the load into the rack (8).

After the load has been placed in stock, the symbol indicates that the load must next be lowered.

– Lower the fork carriage.

The fork carriage is automatically lowered only until the load has been set down. The fork carriage also stops if the operating device is still actuated.

The orange activation bar next to the "Place in stock" symbol (11) indicates that the stock placement assistant is active.

The stock placement assistant gives the instruction:

– Move the load out of the rack (10).

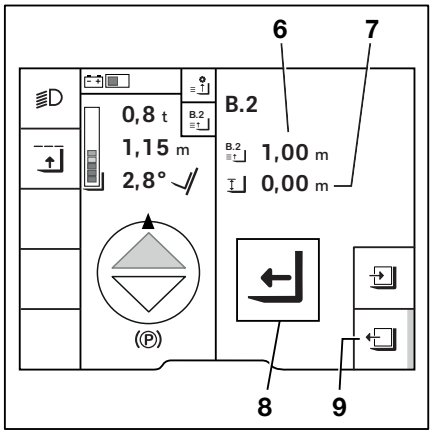

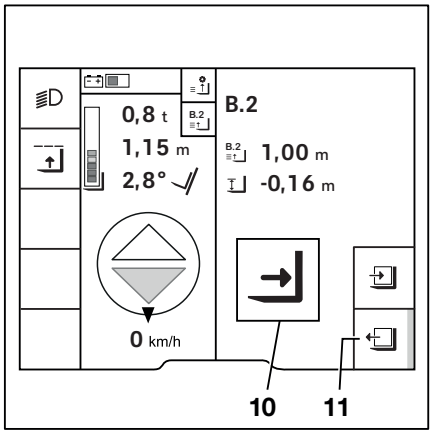

Removing the load from stock

Select the desired area of the warehouse either in the function menu "Load ▸ easy Target" or via the favourites. The adjacent example shows the selection via a favourite (12).

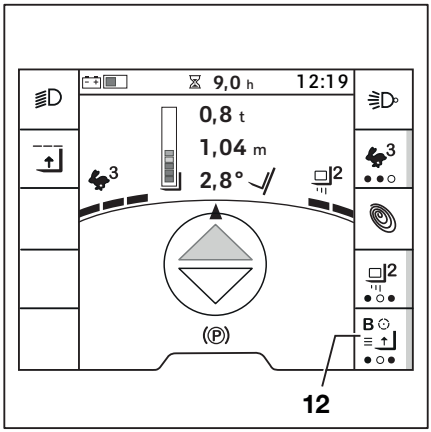

– Approach the selected area of the warehouse.

– Move the operating device for the hydraulic function in the desired direction.

After pressing the "F button", the display shows which stored lift height is reached next in the current lift direction.

– When the operating device is moved, press and hold the "F button".

– When the fork carriage approaches the desired lift height, release the "F button".

When the lift height is reached, the fork carriage stops automatically. It is also taken into account that the load is on a pallet.

– Move the fork into the rack.

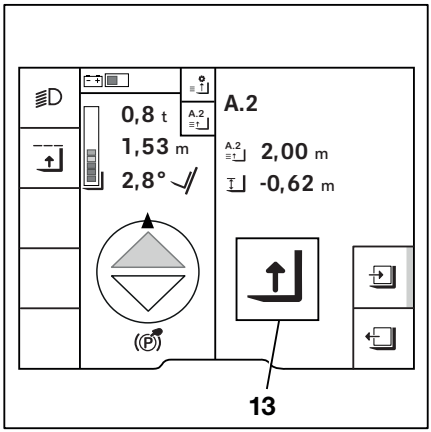

The symbol ⤒ (13) indicates that the load must be raised next.

– Raise the fork carriage.

The fork carriage is automatically raised only until the load can be removed from the rack. The fork carriage also stops if the operating device is still actuated.

The orange activation bar next to the "Remove from stock" symbol ⇥ indicates that the stock removal assistant is active.

The display indicates that you need to reverse.

As soon as the "backwards" drive direction has been selected, the process is complete. The fork carriage reacts to the movements of the lifting and lowering operating devices again.

Intermediate lift cut-out (variant) ▷

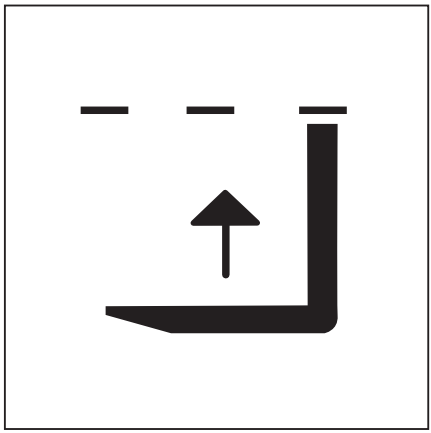

This function interrupts the lifting process at a set lift height. The intermediate lift cut-out function is useful if the fork carriage is frequently lifted to a particular lift height.

There are two options when buying the truck:

1. When buying the truck, the lift heights at which the intermediate lift cut-out takes effect are defined.

   These lift heights are then set and activated on delivery.
2. No lift heights are defined when the truck is bought.

   The lift heights themselves are configured and defined with the "Access authorisation for the fleet manager". See "Configuration by the fleet manager" in this section.

NOTE

Check the lift heights set here before use via the `Intermediate lift cut-out` *menu.*

NOTE

The fleet manager can use his access authorisation to set the lift heights at which the intermediate lift cut-out takes effect. If no fleet manager access is enabled, the authorised service centre must set the desired lift heights.

The intermediate lift cut-out is always active when the truck is switched on. If the function is switched off, it is active again the next time the truck is switched on.

During the lifting operation, the active intermediate lift cut-out is indicated by the grey symbol . This means that the fork is located below the intervention height.

If the symbol appears in black, the fork is just below the intervention height.

NOTE

The display always displays the next lift limit that is in the path of the current lifting movement. The next lift limit at which the function will intervene is highlighted in grey in the display. As soon as the fork carriage nears the lift limit and the function intervenes, the display turns black.

Lifting beyond the current lift limit

To lift beyond the current lift limits, proceed as follows:

- When the fork carriage reaches the set lift limit and stops automatically, move the operating device to the zero position.
- Then push the operating device back into the "lifting" direction.
- You now have one second to bring the operating device back to the zero position and then move the operating device in the "lifting" direction again.

The fork carriage is raised higher.

If the symbol disappears, the fork is at or above the intervention height.

If the fork carriage is lowered to below the configured lift height for the intermediate lift cut-out, the intermediate lift cut-out function is switched on again.

WARNING

Risk of accident due to unintentional switch-off of the intermediate lift cut-out.

If the truck is also equipped with the "intermediate lift cut-out" variant and the shake function is performed close to an intermediate lift cut-out lift limit, this may inadvertently cancel the lift limit.

This can happen if the operating device has to be moved twice in order to cancel the lift limit. If the operating device for the shake function is then repeatedly actuated, this can cancel the lift limit. The fork carriage then moves beyond the lift limit during the shaking process. This can cause the fork carriage to collide with higher objects.

- Do not perform the **shake** function close to the lift height of a lift limit.
- Cancel the lift limit by pressing the "F button". See the following section.

Option: Lifting beyond the intermediate lift cut-out using the "F button"

Optionally, the authorised service centre can configure the function so that the intermediate lift cut-out is suspended by pressing the "F" button on the operating devices for the hydraulic functions.

– Lift the fork carriage until it stops at the configured lift height.

– Release the "lifting" operating device and push the "F" button.

The black symbol disappears. The function is suspended for a short period.

– Continue lifting within one second, as otherwise the function will intervene again. If the function intervenes again, the black symbol will reappear.

Switching off the intermediate lift cut-out

– Press the button.

The first menu level appears.

– Press the softkey.

– Press the softkey.

The orange-coloured activation bar next to the softkey goes out.

The symbol disappears from the main display.

The function is switched off until the next time the truck is restarted.

Configuration by the fleet manager

– Activate the "Access authorisation for the fleet manager".

– Press the button.

– Press the softkey.

– Press the `Truck settings` softkey. ▷

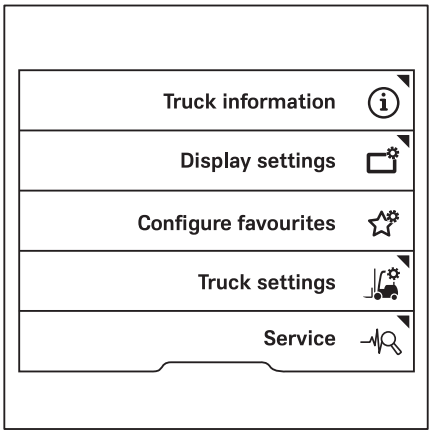

– Press the `Lift cut-out` softkey. ▷

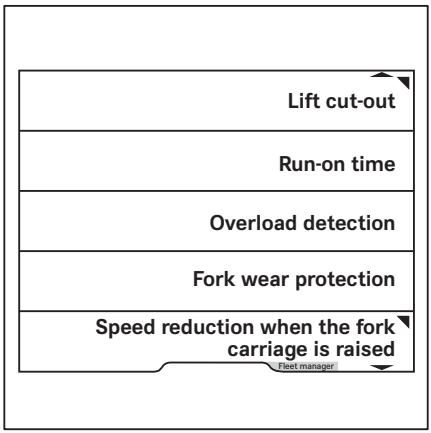

This menu offers three storage locations. ▷

– To configure storage location 1, press the `Intermediate lift cut-out 1` softkey.

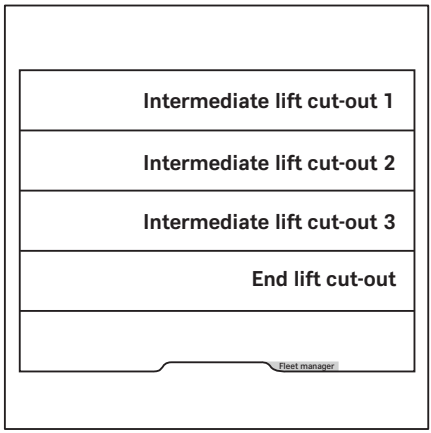

In this menu, you can define the desired lift height. ▷

– Enter the lift height using softkeys `0 to 9`.

– To `save`, press the ▤ button.

– To `activate`, press the scroll button ▽.

The menu closes. The storage locations are displayed. An orange activation bar indicates that the `intermediate lift cut-out 1` is activated.

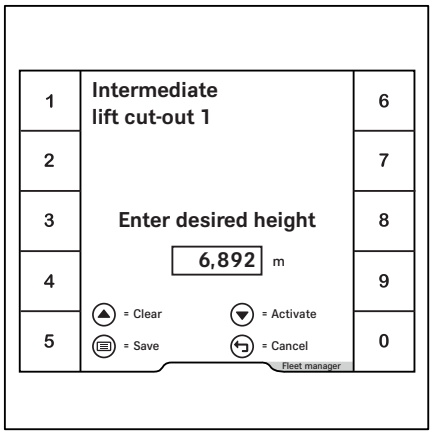

– To deactivate the `intermediate lift cut-out 1`, press the `Intermediate lift cut-out 1` softkey. ▷

– Press the scroll button ▽.

The `intermediate lift cut-out 1` is deactivated. The orange activation bar goes out.

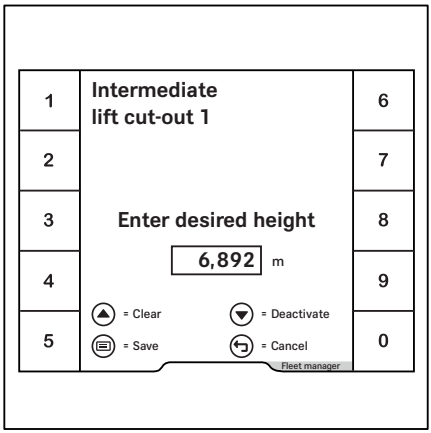

Lift transition damping (variant)

This assistance system, in conjunction with the optical lift height measuring system, ensures that the lifting speed and lowering speed are adjusted at the lift mast transition points. As a result, the inner lift masts move in and out of the outer lift mast smoothly and without jolting. The lifting and lowering procedures are damped on telescopic lift masts, NiHo lift masts and triple masts. This protects the load against jerking movements.

Lift mast end-stop damping (variant)

This assistance system, in conjunction with the optical height measuring system, ensures that the fork carriage reaches the lifting stops gently. This prevents the lifting movement from stopping abruptly.

If the truck is equipped with the "automatic mast vertical positioning" variant, the tilt stops will also be approached gently. This is done by the "tilt end stop damping" assistance system. This increases the comfort for the driver.

End lift cut-out (variant)

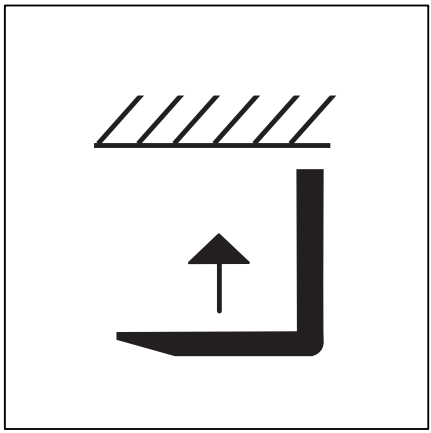

This assistance system limits the lift height of the fork carriage.

This assistance system does not release the driver from the obligation to observe the "Safety regulations for handling loads".

The end lift cut-out is active by default when the truck is switched on. The symbol appears in the display. It can be switched off if required. When the truck is switched on again, it is active again.

NOTE

Check the lift heights set here before use via the `End lift cut-out` *menu.*

Switching off the end lift cut-out

– Stop the truck.

– Apply the parking brake.

– Press the button.

The first menu level appears.

– Press the softkey.

– Press the softkey.

The symbol goes out. The end lift cut-out is switched off.

– To switch the end lift cut-out on again, press the softkey again.

NOTE

The maximum lift height cannot be modified by the driver. It can be changed either by the authorised service centre or with the "Access authorisation for the fleet manager" via the display-operating unit.

Configuration by the fleet manager

– Activate the "Access authorisation for the fleet manager".

– Press the button.

– Press the softkey.

– Press the `Truck settings` softkey. ▷

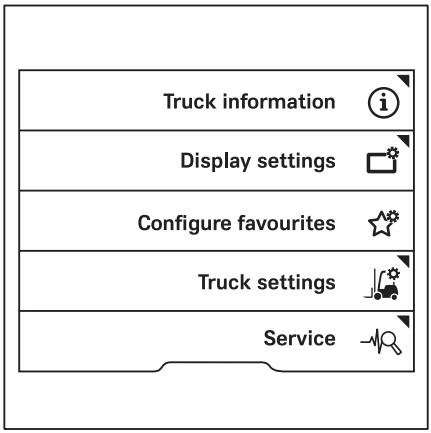

– Press the `Lift cut-out` softkey. ▷

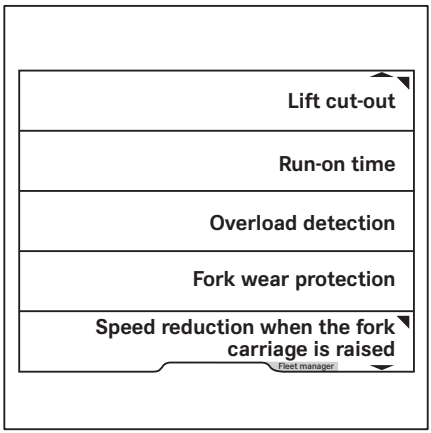

– Press the `End lift cut-out` softkey. ▷

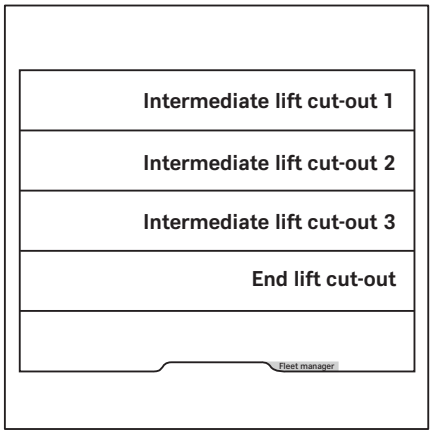

In this menu, you can define the desired lift height. ▷

– Enter the lift height using softkeys `0 to 9`.

– To `save`, press the ☰ button.

– To `activate`, press the scroll button ▽.

The menu closes. An orange activation bar indicates that the `End lift cut-out` is activated.

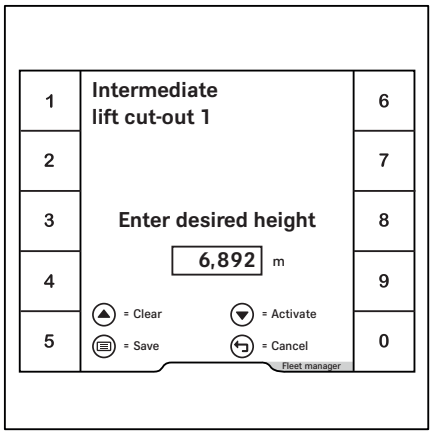

– To deactivate the `End lift cut-out`, press the `End lift cut-out` softkey. ▷

– Press the scroll button ▽.

The `End lift cut-out` is deactivated. The orange activation bar goes out.

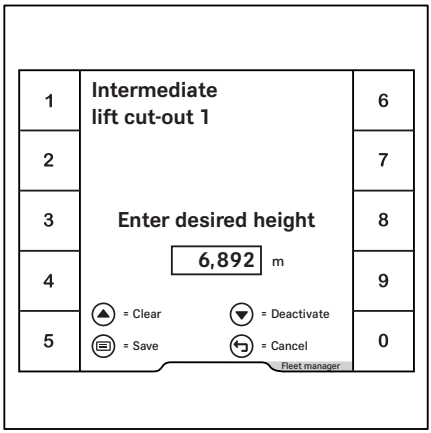

Speed reduction when the fork carriage is raised (variant)

If the fork carriage is lifted to a height above 500 mm, this assistance system automatically reduces the speed of the truck.

NOTE

This lift height can be changed up to 500 mm either by the authorised service centre or with the "Access authorisation for the fleet manager" via the display-operating unit.

Configuration by the fleet manager

Entering the lift height

– Activate the "Access authorisation for the fleet manager".

– Press the ☰ button.

– Press the ⚙ softkey.

– Press the `Truck settings` softkey. ▷

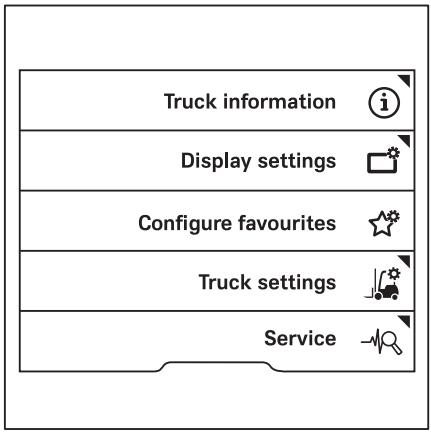

– Press the `Speed restriction for lift` softkey. ▷

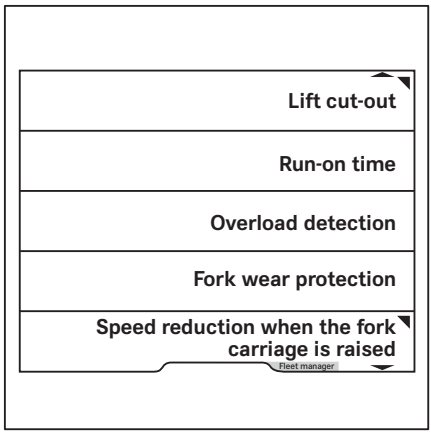

– Press the `Lift height` softkey. ▷

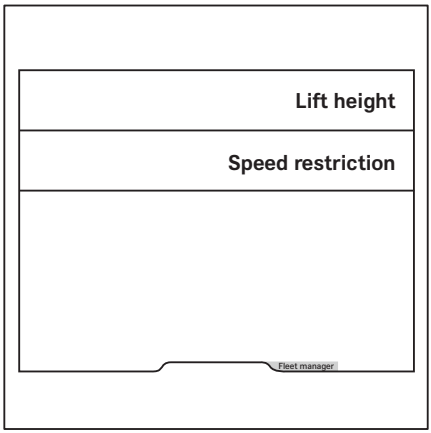

In this menu you can define the desired height. ▷

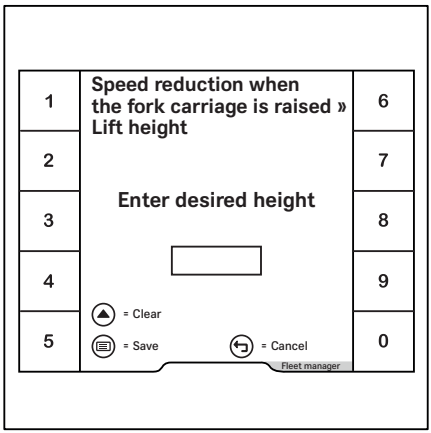

NOTE

The assistance system intervenes automatically from 500 mm. Thus, the height can only be freely selected up to 500 mm.

– Enter the height using softkeys `0 to 9`.

– To `save`, press the button.

The menu closes.

Entering the speed restriction

The maximum speed can be defined, just like the lift height.

– Activate the "Access authorisation for the fleet manager".

– Press the button.

– Press the softkey.

– Press the `Truck settings` softkey. ▷

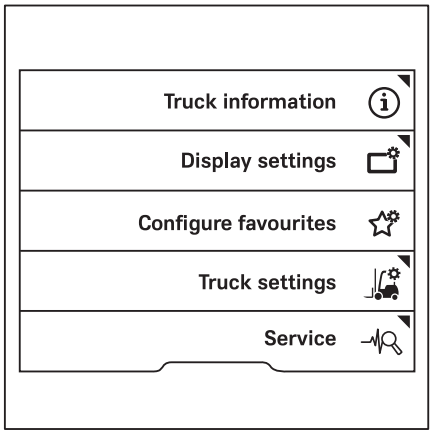

– Press the `Speed restriction for lift` softkey. ▷

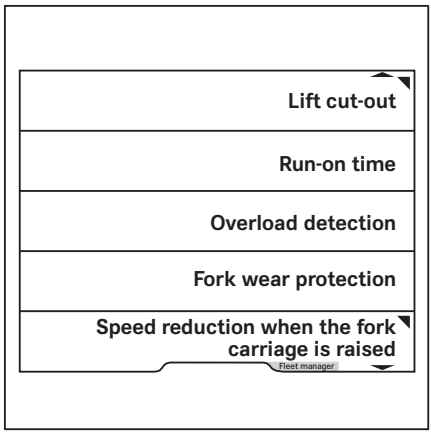

– Press the `Speed restriction` softkey. ▷

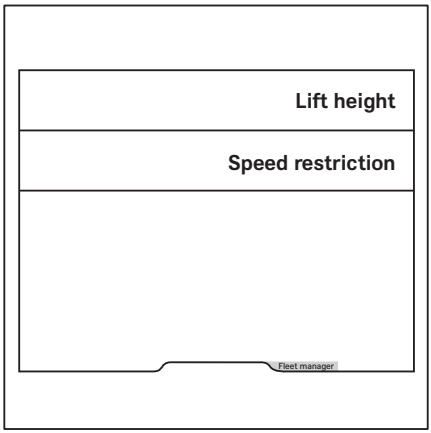

In this menu you can define the maximum speed. ▷

– Enter the speed using softkeys `0 to 9`.

– To `save`, press the ▤ button.

The menu closes.

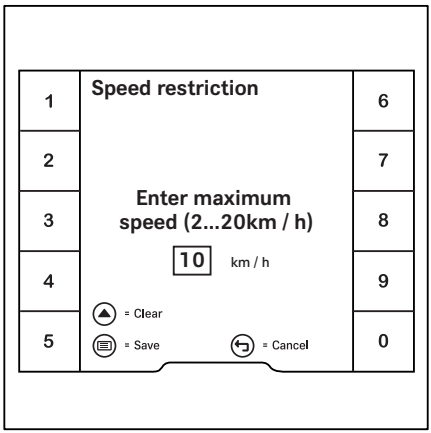

Electrical fork wear protection (variant)

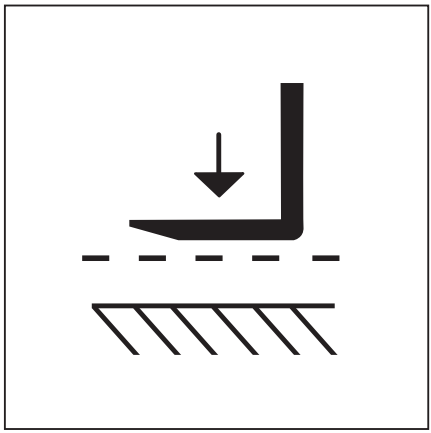

This assistance system, in conjunction with the optical height measuring system, ensures that the fork arms do not touch the ground. The correct height for inserting the forks in a pallet can also be configured. Since the fork must always be lowered completely when the truck is safely parked, the fork wear protection can also be temporarily suspended. See the following section "Lowering the forks completely".

NOTE

The desired height of the fork wear protection can be changed either by the authorised service centre or with the "Access authorisation for the fleet manager" via the display-operating unit.

The fork wear protection function is always active when the truck is switched on. The "fork wear protection" symbol appears in the display. Only the authorised service centre may deactivate the function.

- If the symbol is grey, the assistance system is switched on.
- If the symbol is black, the assistance system is taking effect.
  The fork carriage does not lower to a level that is higher than the set level.

Lowering to the ground

NOTE

The fork wear protection cannot be switched off permanently. The fork wear protection can be temporarily deactivated to lower the fork arms to the ground and securely park the truck.

– Lower the fork carriage until the fork wear protection function intervenes.

– Release the "lower" operating device.

The fork wear protection is switched off.

– To lower the fork to the ground fully, activate the "lower" operating device again.

NOTE

Alternatively, the authorised service centre can parametrise the "F" button to cancel the fork wear protection for the complete lowering of the fork.

NOTE

When you change fork arms, the fork wear protection must be zeroed.

– See the section entitled "Zeroing the assistance systems".

Configuration by the fleet manager

The height of the fork wear protection can be configured, for example, for retraction into pallets with a different height or uneven ground.

– Activate the "Access authorisation for the fleet manager".

– Press the button.

– Press the softkey.

– Press the `Truck settings` softkey. ▷

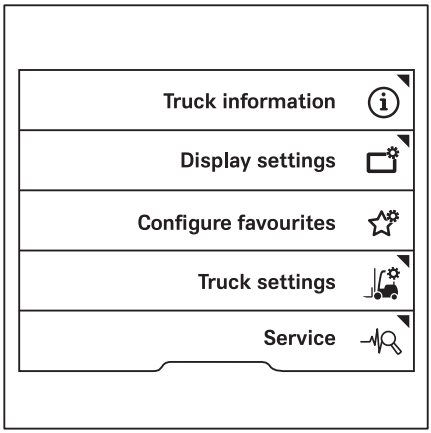

– Press the `Fork wear protection` softkey. ▷

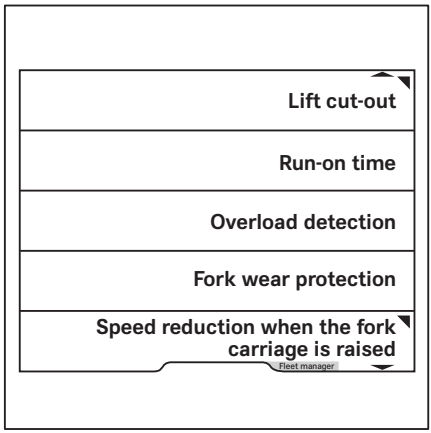

In this menu you can define the desired height. ▷

– Enter the height using softkeys `0 to 9`.

– To `save`, press the ☰ button.

The menu closes.

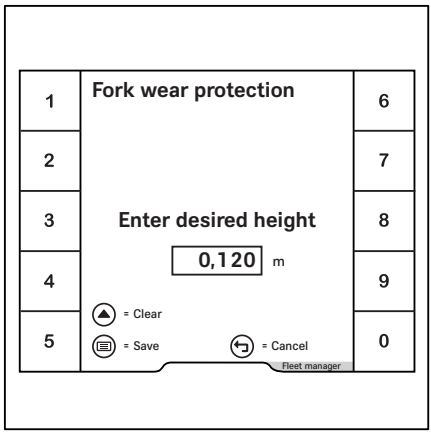

Tilt angle-dependent assistance systems

Mast tilt angle display (variant) ▷

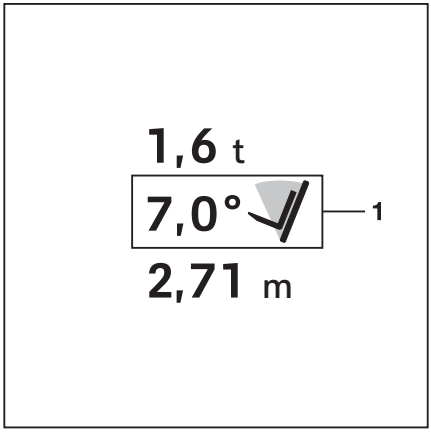

Knowing the actual tilt angle of the lift mast makes it easier to place loads into stock and remove loads from stock. If the truck is equipped with the "mast tilt angle display" assistance system, the lift mast tilt angle (1) is shown on the display.

NOTE

When replacing worn-out pairs of tyres or when the front and rear tyres are worn to different levels, the mast tilt angle display must be zeroed.

– See the section entitled "Zeroing the assistance systems".

Tilt end stop damping (variant)

This assistance system ensures that the movement to the end positions is smooth. This protects the load against jerking movements.

Automatic mast vertical positioning (variant) ▷

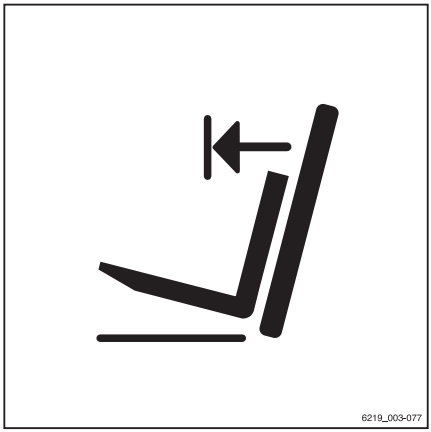

CAUTION

Risk of damage to property due to the lift mast colliding with racks or other objects!

– Before using the "automatic mast vertical positioning" assistance system, position the truck at a sufficient distance from racks and other objects.

The "automatic mast vertical positioning" assistance system can be used to set down the goods so that the goods are exactly vertical, e.g. paper rolls. This prevents damage when setting down the load. "Automatic mast vertical positioning" functions when tilting forwards. A further variant is available which also functions when tilting backwards. The tilt cylinders run into the end stops gently to prevent hard vibrations and impacts. Oscillating motions of the truck are minimised, thus increasing work safety. Automatic mast vertical

positioning reduces wear on various components, thereby reducing repair costs.

The "automatic mast vertical positioning" assistance system consists of the following individual functions:

- Display of the "Automatic mast vertical positioning" feature
- Automatic startup of the "Automatic mast vertical position" feature

The truck can also be equipped with only the "mast tilt angle display" feature.

NOTE

Check the function of automatic mast vertical positioning whenever the truck is used.

– See the section entitled "Function checking of the automatic mast vertical positioning function".

– Press the softkey.

The symbol appears in the display.

– Tilt back the lift mast until it reaches the end stop.

– Tilt the lift mast forwards.

The lift mast stops in the vertical position.

NOTE

The lift mast also stops in the vertical position if it is tilted forwards by ≥ 3° from a backward tilt.

NOTE

The automatic mast vertical positioning must be calibrated in order to ensure accuracy at all times. The "access authorisation for the fleet manager" is required for the calibration. This access is required:

- *When placing loads into stock and removing loads from stock on HGV ramps*
- *In the event of tyre wear*
- *If the lift mast is obviously not in the vertical position*

– See the section entitled "Calibrating the automatic mast vertical positioning".

Function checking of the automatic mast vertical positioning function (variant)

⚠ CAUTION

Risk of damage to property due to the lift mast colliding with racks or other objects!

– Before using the "automatic mast vertical positioning" assistance system, position the truck at a sufficient distance from racks and other objects.

– To check the function of the automatic mast vertical positioning function, proceed as follows:

– Press the softkey.

The symbol appears in the display.

– Tilt back the lift mast until it reaches the end stop.

– Tilt the lift mast forwards.

The lift mast must stop in the vertical position.

The automatic mast vertical positioning can be used.

– If the lift mast does not stop in the vertical position, do not use the assistance system.

– In this case, contact your authorised service centre.

Calibrating the automatic mast vertical positioning

The automatic mast vertical positioning is calibrated using a wizard on the display-operating unit.

NOTE

The wizard requires access authorisation for the fleet manager. Access to the settings menu is only available if the truck is at a standstill and the parking brake is applied. If the parking brake is released prematurely, the settings menu will close.

– Set the load down, if necessary.

– Drive the truck into an area that is to be used for placing loads into stock and removing loads from stock.

Once the "automatic mast vertical positioning" assistance system has been calibrated, a pallet can be stored horizontally in a rack when the truck is standing on a HGV ramp, for example.

– Lift the fork carriage slightly.

– Apply the parking brake.

– Attach a tilt angle template with a spirit level to the outer lift mast. ▷

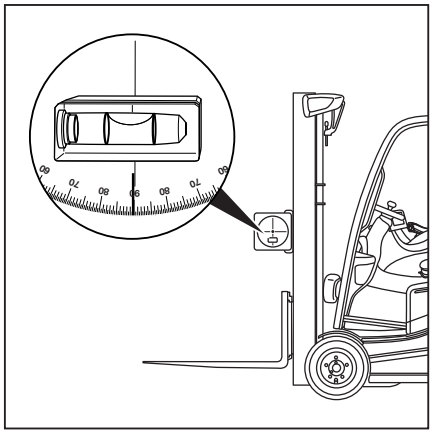

– Bring the lift mast to the vertical position according to the spirit level.

– Press the ☰ button.

– Press the ⚙ Softkey.

– Activate the "Access authorisation for the fleet manager".

– Press the `Service` softkey. ▷

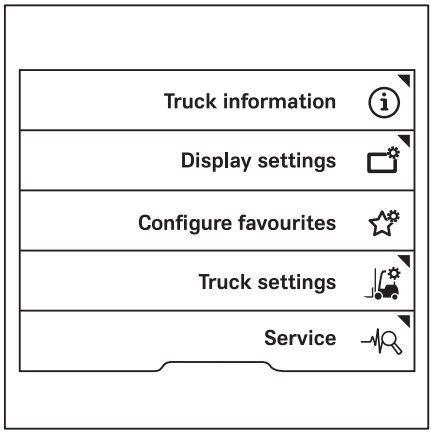

– Press the scroll keys △ ▽ until the `Calibration` menu appears. ▷

– Press the `Calibration` softkey.

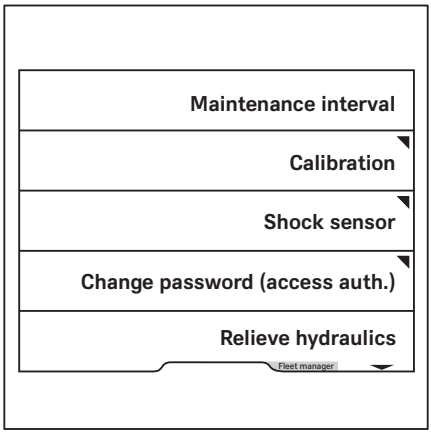

– Press the `Lift mast tilting` softkey. ▷

The wizard for calibrating the load measurement is started.

– Follow the instructions on the display.

– If the message `Calibration failed !` appears, press the ☑ softkey.

– Repeat the process.

After the calibration has been completed successfully, the message `Calibration successful` ✓ appears.

– Switch the truck off and on again.

The calibration is now complete.

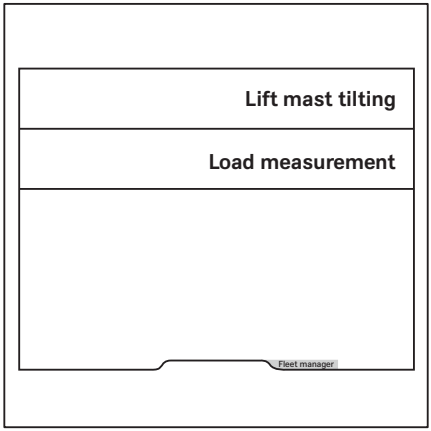

NOTE

If the message `A6701 Fault: Monitoring of assistance system` ⚠ *appears during the calibration, perform the calibration again.*

Load-dependant assistance systems

Overload detection (variant)

⚠ WARNING

Risk of accident as a result of exceeding the permissible load capacity!

This assistance system does not replace the driver's duty to observe the load capacity specified on the nameplate.

– Observe the load capacity specified on the nameplate.

This assistance system alerts the driver as soon as an excessive load is picked up. The message `Overload` ⚠ is shown on the display-operating unit.

The maximum load always refers to the sum of the load picked up plus any attachments present. The authorised service centre can configure the setting for the maximum load. However, the maximum load must not be higher than the nominal load.

The overload detection restricts the hydraulic functions as follows:

- If the rated capacity or the maximum load set by the authorised service centre is exceeded, the lifting speed is reduced.
- If the rated capacity or the set maximum load are exceeded by more than 10%, the "Lifting" function is disabled.

NOTE

Please note the following special considerations:

- *If the load pressure sensor fails, the maximum load (nominal load) is assumed. The function engages to the maximum extent.*
- *If the lifting stage switch fails, the truck control unit assumes the fork carriage is at the maximum lift height.*
- *In the case of overload, the "lifting" function is blocked from the factory. The authorised service centre can remove the "lifting" function block and restrict the function instead.*

Configuration by the fleet manager

– Activate the "Access authorisation for the fleet manager".

– Press the button.

– Press the softkey.

– Press the `Truck settings` softkey. ▷

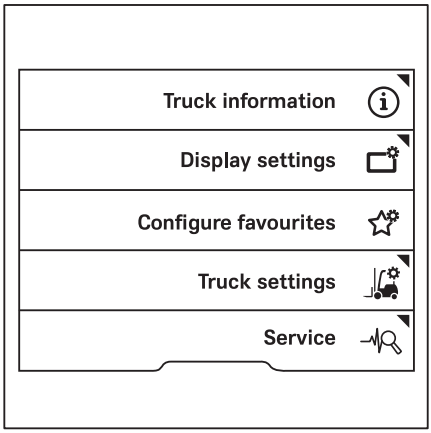

– Press the `Overload detection` soft-key. ▷

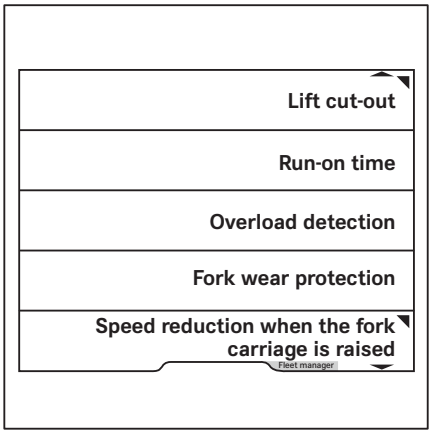

In this menu you can define the desired weight.

– Enter the weight using softkeys `0 to 9`.

NOTE

Only a lower value than the permissible load capacity of the truck can be entered as an overload.

– To `save`, press the button.

The menu closes.

▷

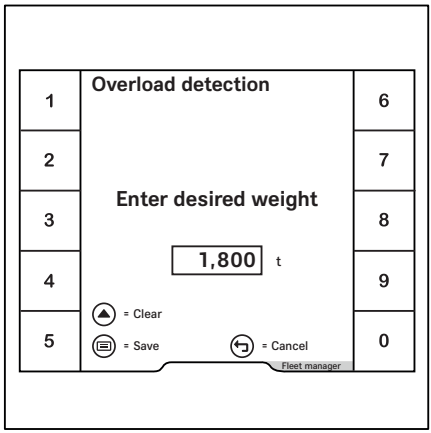

Dynamic Load Control 1 (variant)

WARNING

Risk of accident as a result of overloading!

Dynamic Load Control 1 is not a safety function and does not release the driver from the duty to observe the information specified in the load capacity diagram!

WARNING

Risk of accident due to the slow response of the lifting system!

If the lifting movements are configured to use low dynamics, the lifting system responds after a delay when the operating device is released, even in an emergency. The fork carriage does not stop immediately; instead, it takes approx. one second.

This behaviour may also occur when specific settings are configured for the Dynamic Load Control 1.

– Work with particular attention and care.

– Observe the "Dynamics of the hydraulic movements" section in the chapter entitled "Lifting".

Dynamic Load Control 1 improves the handling of the load. This function protects the truck and the load from abrupt movements.

Dynamic Load Control 1 regulates the lifting and tilting dynamics and the driving dynamics according to the following criteria:

- Lift height
- Load weight

Load movements which could lead to critical conditions are slowed down if necessary.

Dynamic Load Control 1 intervenes in the following operating situations:

- With a telescopic lift mast:
  The fork carriage is at least 2.1 m off the ground.
- With a triple lift mast or NiHo lift mast:
  The fork carriage is in the second lifting stage
- The load picked up exceeds 50% of the nominal load

The driving speed is reduced to 5 km/h at a lift height of 2.1 m and higher or in the second lifting stage.

NOTE

When the fork carriage has been lowered below the lift heights mentioned above, the driver can deactivate the speed restriction again. Release the accelerator pedal for a short period to do this.

If a sensor belonging to Dynamic Load Control 1 fails, the level of intervention from the function is increased to a maximum.

Dynamic Load Control 2 (variant)

WARNING

Risk of accident as a result of overloading!

"Dynamic Load Control 2" is not a safety function and does not release the driver from the duty to observe the information specified in the load capacity diagram!

⚠ WARNING

Risk of accident due to the slow response of the lifting system!

If the lifting movements are configured to use low dynamics, the lifting system responds after a delay when the operating device is released, even in an emergency. The fork carriage does not stop immediately; instead, it takes approx. one second.

This behaviour may also occur when specific settings are configured for the Dynamic Load Control 2.

– Work with particular attention and care.
– Observe the "Dynamics of the hydraulic movements" section in the chapter entitled "Lifting".

"Dynamic Load Control 2" improves the handling of the load. This function protects the truck and the load from abrupt movements.

Dynamic Load Control 2 regulates the lifting and tilting dynamics and the driving dynamics according to the following criteria:

- Lift height
- Load weight
- Load centre of gravity

Dynamic Load Control 2 intervenes in the following operating situations:

- With a telescopic lift mast:
  The fork carriage is at least 2.1 m off the ground.
- With a triple lift mast or NiHo lift mast:
  The fork carriage is in the second lifting stage
- The truck centre of gravity has shifted to an unfavourable position due to the position of the load

Dynamic Load Control 2 calculates the interaction between these three criteria and intervenes in the calculated result.

Load movements which could lead to critical conditions are slowed down if necessary.

The driving speed is reduced to 5 km/h at a lift height of 2.1 m and higher or in the second lifting stage.

NOTE

When the fork carriage has been lowered below the lift heights mentioned above, the driver can deactivate the speed restriction again. Release the accelerator pedal for a short period to do this.

The bar display on the display of the display-operating unit is part of the load information. It is part of the Dynamic Load Control 2.

The number and colour of the bars indicates to what extent the determined load weight and load centre of gravity affect the stability of the truck.

The bar display is divided into three sections and ten segments.

A **Grey area**

The dynamics of the lifting movements and tilting movements are not noticeably reduced.

B **Yellow area**

If a load that is close to the nominal load is picked up, the display moves into the yellow area.

The dynamics of the lifting movements and tilting movements are noticeably reduced.

– Handle the load with the appropriate level of care.

C **Red area**

When the combination of load weight and load centre of gravity exceeds the specified value, the display moves into the red area.

The dynamics of the lifting movements and tilting movements are significantly reduced.

– In this case, set down the load or tilt backwards.

▷

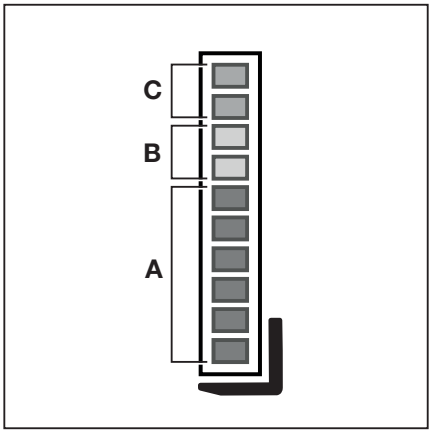

A Grey
B Yellow
C Red

If a sensor belonging to Dynamic Load Control 2 fails, the level of intervention from the function is increased to a maximum. A cross appears instead of the bar.

– If this display appears permanently, contact the authorised service centre.

▷

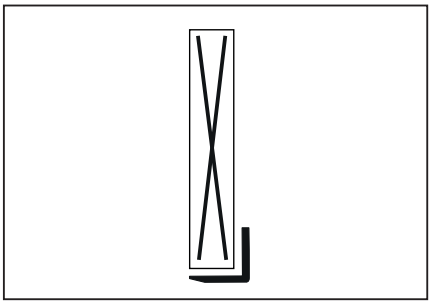

Load measurement (variant)

▷

Knowing the weight of the load to be transported gives the driver greater security. If the truck is equipped with the "load measurement" assistance system, the weight of the lifted load is measured and displayed in the display-operating unit (1). The measuring accuracy is 5% of the rated capacity.

– Observe the following safety information.

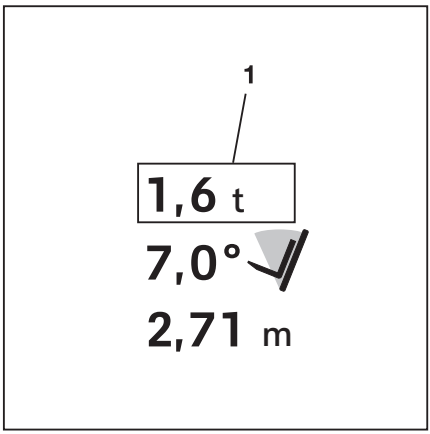

⚠ DANGER

Risk of accident from a falling load!

The load may fall if the load centre of gravity has not been taken into account or the load has not been picked up securely.

– Pick up the load securely; see the chapter entitled "Picking up loads".

⚠ WARNING

Risk of accident as a result of exceeding the residual load capacity.

If the weight determined by a load measurement exceeds the permissible residual load capacity of the truck, the truck cannot be operated safely.

– Set down and reduce the load immediately.

– If necessary, use another truck with sufficient load-bearing capacity.

NOTE

The load measurement must be calibrated in order to ensure accuracy at all times. The "access authorisation for the fleet manager" is required for the calibration. This access is required:

- *After changing the fork arms,*
- *After fitting or changing attachments*
- *If the displayed values are obviously incorrect*

If `-.-- t` is displayed permanently, this means that the function is calibrated incorrectly (load < 0 kg).

– See the section entitled "Calibrating the load measurement".

NOTE

When you change fork arms or attachments, the load measurement must be zeroed.

– See the section entitled "Zeroing the assistance systems".

Calibrating the load measurement

If the truck is equipped with the "load measurement" assistance system, then this assistance system must be calibrated.

The load measurement is calibrated using a wizard on the display-operating unit.

NOTE

The calibration procedure requires access authorisation for the fleet manager. Access to the settings menu is only available if the truck is at a standstill and the parking brake is applied. If the parking brake is released prematurely, the settings menu will close.

– Set the load down, if necessary.

– Drive the truck onto an even surface.

– Apply the parking brake.

– Press the ☰ button.

– Press the ⚙ Softkey.

– Activate the "Access authorisation for the fleet manager".
– Press the `Service` softkey. ▷

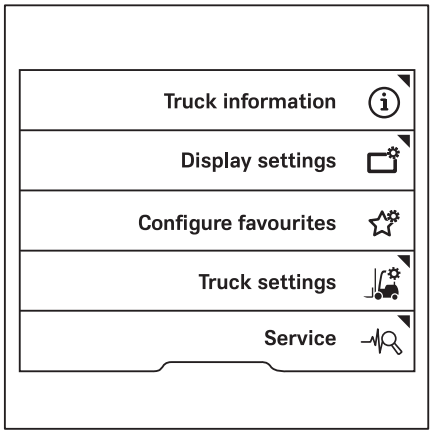

– Press the scroll keys △ ▽ until the `Calibration` menu appears. ▷

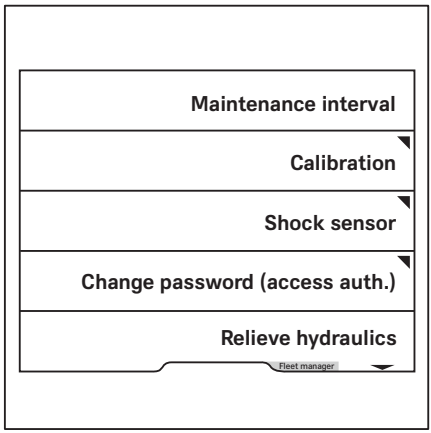

– Press the `Load measurement` softkey. ▷

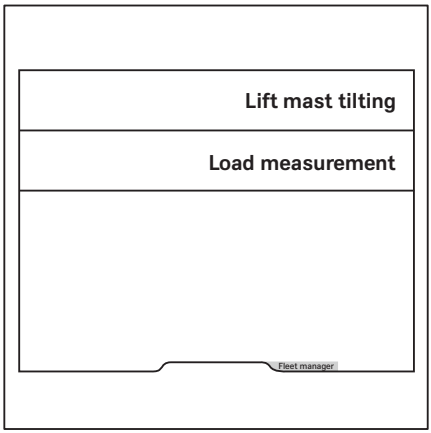

The wizard for calibrating the load measurement is started.

– Follow the instructions on the display.

– If the message `Calibration failed !` appears, press the ☑ softkey.

– Repeat the process.

After the calibration has been completed successfully, the message `Successful calibration` ✓ appears.

– Switch the truck off and on again.

The calibration is now complete.

NOTE

If the message `A6701 Fault: Monitoring of assistance system` ⚠ *appears during the calibration, perform the calibration again.*

Precision load measurement (variant) ▷

This assistance system is available only if the truck is equipped with the "load measurement" variant.

The "Precision load measurement" variant allows the weight of the load being picked up to be measured and displayed on the display-operating unit accurate to within 3% of the rated capacity of the truck.

NOTE

If the load is to be measured exclusive of the load pick-up device, run the tare function. See the next section.

– Pick up the load safely.

– Press the ▤ button.

The first menu level appears.

– Press the ▤ softkey.

– Press the softkey (1). ▷

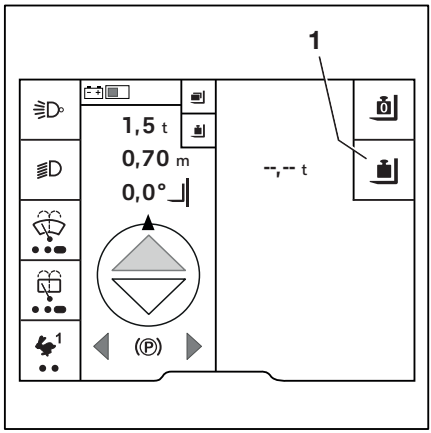

The `Lower fork slightly` prompt is displayed. ▷

– Lower the fork carriage.

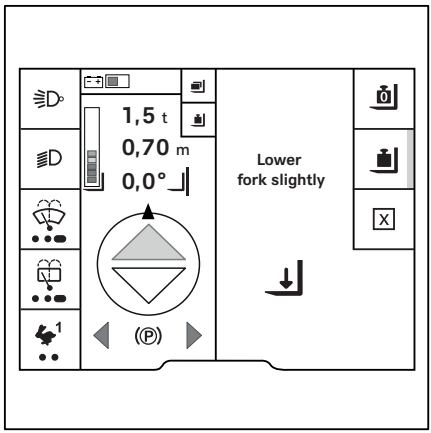

NOTE

Slowly lowering the fork carriage increases the measurement accuracy in trucks with multi-lever operation.

The value is calculated. The `Calc. ongoing` message appears.

If the calculation was successful, the measured weight of the load (1) is displayed. ▷

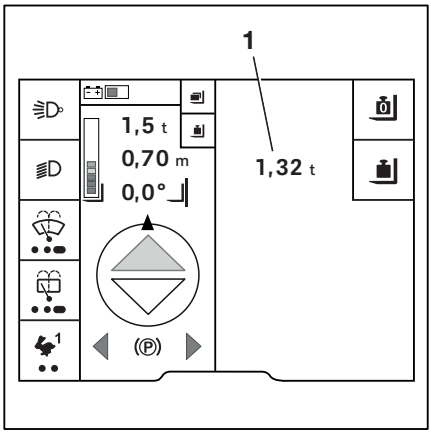

NOTE

If the tare function was not active, the full weight of the load being picked up is displayed.

The measured weight remains displayed until:

- The load has been measured again
- The sensor system detects a change in the weight
  In this case, `-.--  t` is displayed as the weight.

Tare function (variant) ▷

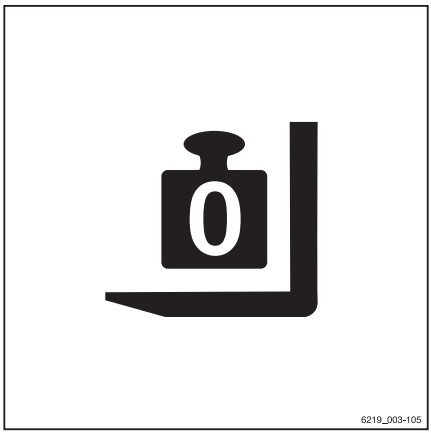

The tare function is a sub-function of the precision load measurement function. If the precision load measurement function should not factor in the weight of a load container, the tare function must be run. It is then possible to determine the net weight of the raised load.

NOTE

During the following process, the fork carriage must be lowered slightly. When doing so, the fork must not touch the ground, as otherwise the result will be inaccurate.

– Set the lift mast to vertical.

– Pick up the empty load container, such as a crate.

– Raise the fork to a height of between 300 mm and 800 mm.

– Press the ☰ button.

The first menu level appears.

– Press the ▣ softkey.

– Press the ▣ softkey.

– Press the softkey (1).

The activation bar next to the symbol lights up.

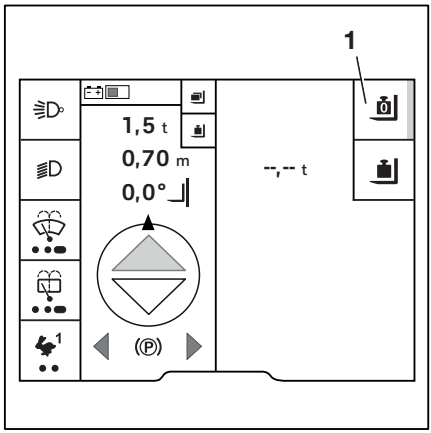

The `Lower fork slightly` prompt is displayed.

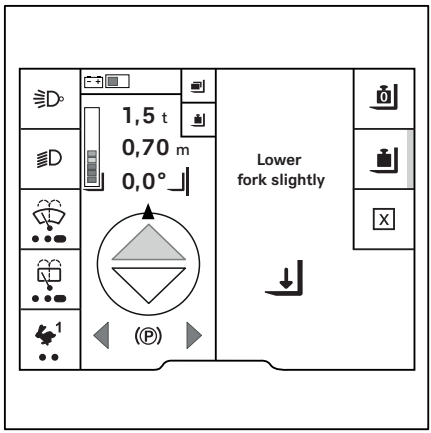

– Lower the fork carriage.

The value is calculated. The message `Zeroing ongoing` is displayed.

If the tare function was run successfully, a weight of 0.00 t is displayed. The activation bar next to the symbol remains illuminated.

– If the tare function was not run successfully, follow the prompts on the display and repeat the process.

When a load is picked up, `-.-- t` is displayed.

The "Precision load measurement" can be performed.

– To clear the tare weight, press the softkey again.

⚠ WARNING

Risk of accident due to incorrect load specification.

If the requirements for the precision load measurement function change, the tare function must be run again, for example if a precision load measurement needs to be performed without a crate. Otherwise, the new precision load measurement will continue to deduct the weight of the crate.

– Run the tare function again without a load or a crate.

Total load (variant) ▷

Use the "total load" variant to calculate the total weight of multiple loads. The "total load" is an additional function of the "load measurement". It records the individual loads and stores up to three total loads.

This allows, for example, three different containers to be laden and their loading weight to be determined. This function is helpful if, for instance, a container has a limited payload and you want to know when the permissible load weight has been reached.

This function is useful for comparing the loads indicated on delivery documents to the actual loads, for example.

The procedure for adding up the total load is as follows:

1 Pick up the load and call up the load menu,
2 Measure the load,
3 Add/subtract the load.

⚠ WARNING

Risk to stability.

If the weight determined by a load measurement exceeds the permissible residual load capacity of the truck, the truck cannot be operated safely.

– Do not lift the load higher than 800 mm.
– Set down and reduce the load immediately.
– If necessary, use another truck with sufficient load-bearing capacity.

NOTE

Lift the load to a height of between 300 mm and 800 mm, since the load must subsequently be lowered slightly for the weighing process. If the weighing process establishes that the load is too heavy, the load must not be lifted higher than 800 mm. The fork arms must not touch the ground.

Picking up the load and calling up the load menu

– Pick up the load safely.
– Press the ▤ button.

The first menu level appears.

– Press the softkey.

– Press the softkey.

A menu appears with three storage locations for the total load. ▷

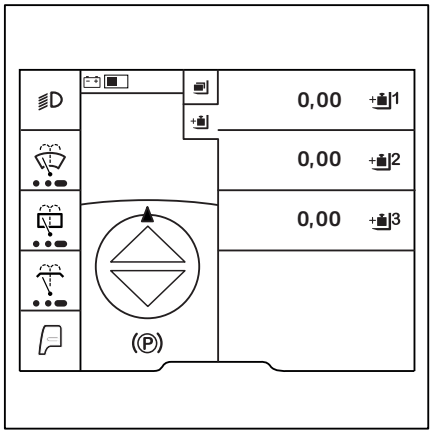

The total load is explained here using 1.

– Press the 1 softkey.

The menu for storage location 1 appears. ▷

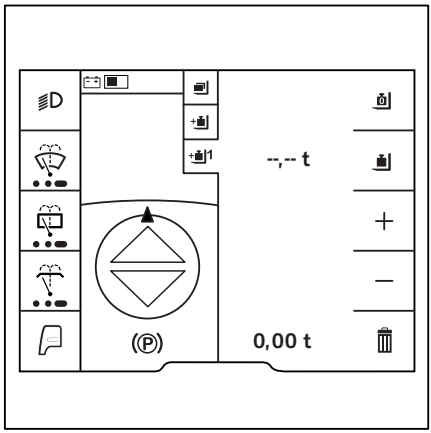

This menu provides the following functions:

- Tare
- Precision load measurement
- + Add load
- – Subtract load
- Delete total load

Measure load

– Press the softkey. Measure the load.

The message with the prompt `Lower fork slightly` appears.

– Lower the fork carriage.

The value is calculated. The `Calc. ongoing` message appears.

If the calculation was successful, the load is displayed.

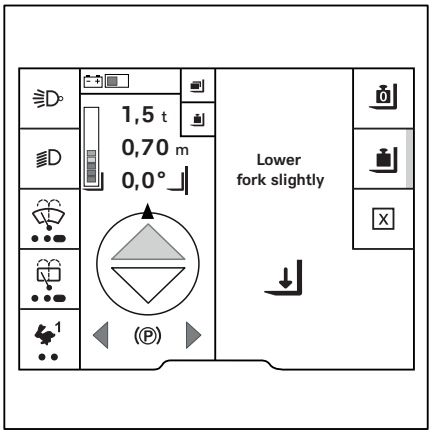

Adding a load

– Pick up the load to be added.

– Measure the load as described previously.

– Press the + softkey.

The load is saved automatically.

Subtracting a load

– Pick up the load to be subtracted.

– Measure the load as described previously.

– To subtract the current load, press the
  – softkey.

The current load is subtracted from the sum.

The load is saved automatically.

NOTE

If, for instance, this load was added to the wrong total load, it is also possible to perform a subtraction with the previously measured and added load.

Delete total load

– To delete the total load, press the 🗑 softkey.

The `Clear total load?` message ? is displayed.

– To clear, press the ☑ softkey.

– To cancel, press the ☒ softkey.

The display changes back to the menu with the three storage locations.

Zeroing the assistance systems

Zeroing process

The following assistance systems sometimes require zeroing.

- **Load measurement**
  When changing fork arms or attachments
- **Lift height display**
  When replacing worn tyres
  For increasingly worn tyres / for new tyres
- **Mast tilt angle display**
  ○ When replacing a worn pair of tyres, if the front and rear tyres are worn to different levels.
  ○ If the front and rear tyres show different levels of wear.
- **Electrical fork wear protection**
  When changing fork arms

NOTE

The zeroing for the "load measurement" assistance system is shown here as an example.

– Activate the "Access authorisation for the fleet manager".

– Press the button.

– Press the softkey.

– Press the `Truck settings` softkey. ▷

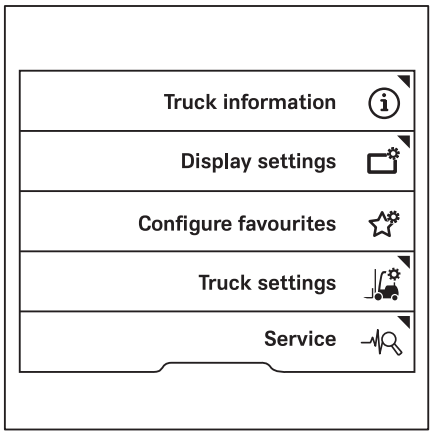

– Press the `Zeroing` softkey. ▷

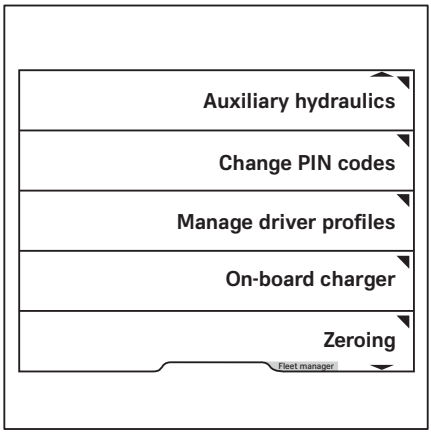

– Press the softkey for the assistance function for which the zeroing is to be performed, e.g. `Load weight`. ▷

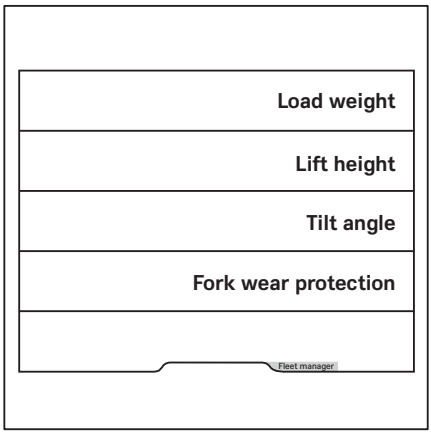

NOTE

The processes for zeroing the other assistance systems are almost identical.

The instructions are shown in the display. ▷

Here: `Lower forks`

After the instructions have been followed, the messages `Zeroing successful` or `Zeroing failed` are displayed.

– If zeroing failed, try again.

– If zeroing fails repeatedly, contact your authorised service centre.

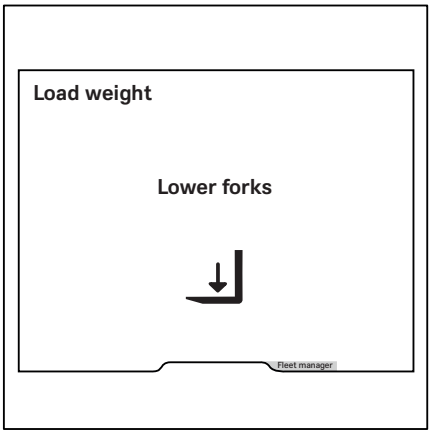

Attachments

Fitting attachments

If the truck is equipped with an integrated attachment (variant) at the factory, observe the specifications in the STILL operating instructions for integrated attachments.

If attachments are fitted at the place of use, observe the specifications in the operating instructions from the attachment manufacturer.

If an attachment is not delivered together with the truck, observe the specifications from the manufacturer and the operating instructions from the attachment manufacturer.

Before initial commissioning, have the function of the attachment and the visibility from the driver's position with and without a load checked by a competent person. If the visibility is deemed insufficient, use visual aids, such as mirrors, a camera, a monitor system etc.

– Observe the following warning notices.

⚠ DANGER

Risk of death from falling load!

If attachments that hold the load by clamping it or exerting pressure on it do not have a second operating function (lock) to be activated, the load can work loose and fall off.

– Ensure that the second operating function (lock) to be activated is available.
– When retrofitting such attachments, also retrofit a second operating function (lock) to be activated.

⚠ DANGER

Risk of death from falling load!

When installing a clamp with an integrated sideshift function, ensure that the clamp does not open when the sideshift is actuated.

– Notify your authorised service centre before installation.
– Never reach into or climb on moving parts of the truck.

⚠ WARNING

Risk of accident due to incorrect labelling!

The use of attachments can cause accidents if the labelling is incorrect or missing.

If the truck is not fitted with an attachment-specific residual load capacity rating plate and if the operating devices are not marked with the relevant pictograms, the truck must not be used.

- Use only CE-certified attachments that have operating instructions and the required labels.
- In the United Kingdom, the attachments must also be UKCA certified and have the required labelling.
- Arrange for an attachment-specific residual load capacity rating plate to be fitted to the truck.
- Arrange for the operating devices to be re-labelled.
- Arrange for the authorised service centre to adjust the hydraulic system to the requirements of the attachment (e.g. adjust the pump motor speed).

⚠ WARNING

Risk of accident in the event of a steering failure!

Every time attachments are changed, some hydraulic oil can be lost.

If attachments are changed frequently, the hydraulic oil level can become too low.

With the lift mast extended, this low hydraulic oil level can lead to steering failures.

- If attachments are changed frequently, check the hydraulic oil level regularly and top up the hydraulic oil when necessary.

NOTE

If the required labelling is not provided with the attachment, contact the authorised service centre promptly.

Alternating operation using an electrical switch valve

If non-integrated attachments for alternating operation are used in conjunction with an electrical switch valve for the fifth and sixth hydraulic function, the electrical switch valve must operate at 12 V.

- Contact the authorised service centre if necessary.

Plug connectors on the lift mast

▷

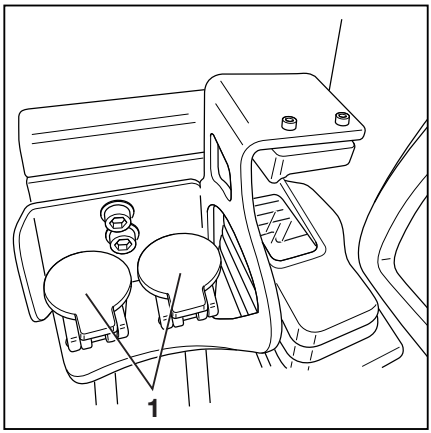

– Before fitting the attachment, depressurise the hydraulic system; see the chapter entitled "Depressurising the hydraulic system".

⚠ CAUTION

Risk of damage to components!

Open connections on the plug connectors (1) can become dirty. Dirt can enter the hydraulic system. The plug connectors can become stiff.

– Once the attachment has been disassembled, seal the plug connectors using the protective caps.

Mounting attachments

Only competent persons are permitted to mount and connect the energy supply to the attachment.

– Observe the information provided by the manufacturer and supplier or sub-supplier of the attachment when doing so.

NOTE

Please observe the definition of the following responsible person: "competent person".

– Switch off the truck.

– Install the attachment.

– Switch on the truck.

– Check and ensure that all functions of the installed attachment are working properly.

Load capacity with attachment

The permissible load capacity of the attachment and the permissible load (load capacity and load moment) of the truck must not be exceeded by the combination of the attachment and the payload. Adhere to the specifications of the manufacturer and supplier or sub-supplier of the attachment.

– Observe the residual load capacity rating plate; see the chapter entitled "Picking up a load using attachments".

Depressurising the hydraulic system

⚠ WARNING

The movements of the load lift system present a risk of crushing.

During the process described below, the fork carriage or the lift mast can only be moved slightly.

– Do not reach into or stand below the components of the load lift system.

NOTE

The internal combustion engine must be switched off in order to depressurise the system.

– Insert the switch key into the key switch and turn it to the "I" position.

The valves are supplied with power and the hydraulic system is depressurised.

Depressurising the hydraulic circuits for the basic functions

The basic functions include the first four hydraulic functions. The basic functions are controlled via the first two hydraulic circuits.

The basic functions are:

- Lifting the fork carriage
- Lowering the fork carriage
- Tilting the lift mast forwards
- Tilting the lift mast backwards

– Actuate the operating levers for controlling the hydraulic functions once in the directions of the arrows as far as the end positions.

The hydraulic circuits of the basic functions are now depressurised.

Depressurising the hydraulic circuits for the "5th hydraulic function"

If the truck has a "5th hydraulic function", the hydraulic circuits of these functions must also be depressurised. The procedure is similar to the depressurisation of the hydraulic circuits for the basic functions. In addition, the hydraulic circuits are depressurised in the same way as the attachments are operated.

The hydraulic circuits for the "5th hydraulic functions" are actuated via the corresponding buttons on the operating devices.

- Function key for the "5th function" with mini-lever control and Fingertip operation
- Shift key "F" with Joystick 4Plus operation (hereinafter referred to as the "button")

– Press and hold the button (1) for the operating devices.

– Again, actuate the operating levers for controlling the hydraulic functions once in the directions of the arrows as far as the end positions.

– With Joystick 4Plus operation, also actuate the slider and the rocker buttons.

The hydraulic circuits for the "5th hydraulic function" are depressurised. The plug connectors on the lift mast are depressurised.

– Release the button (1).

▷

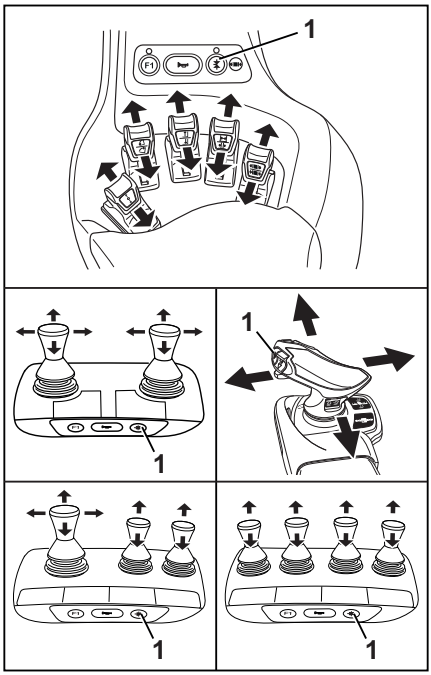

Special feature for clamping attachments

NOTE

If a clamping attachment is fitted, please observe the following:

- *Depressurising the hydraulic circuit for clamping attachments is performed in the same way as opening and closing the clamp.*
- *Loosen the clamp locking mechanism; see the relevant sections related to the clamp locking mechanism.*
- *Push the operating device once in the "Open" direction.*
- *Push the operating device once in the "Close" direction.*

Completing the depressurisation

– After the hydraulics have been depressurised, press the Softkey ☑ to confirm.

– Switch off the truck.

– Install the attachment.

– Switch on the truck.

The function for depressurising the hydraulics is inactive. The truck is ready for operation.

– Check and ensure all functions of the installed attachment are working properly.

General instructions for controlling attachments

The way in which attachments (variant) are controlled depends on the operating devices included in the truck's equipment.

Essentially, a distinction is drawn between:

- **Double mini-lever**
- **Double mini-lever and 5th function** (variant)
- **Triple mini-lever**
- **Triple mini-lever with a 5th function** (variant)
- **Quadruple mini-lever**
- **Quadruple mini-lever with a 5th function** (variant)
- **Joystick 4Plus**
- **Joystick 4Plus with a 5th function** (variant)
- **Fingertip**
- **Fingertip with a 5th function** (variant)

– For information on controlling attachments with the respective operating devices, see the relevant sections in this chapter.

⚠ WARNING

Use of attachments can give rise to additional hazards such as a change in the centre of gravity, additional danger areas etc.

Attachments must only be deployed for their intended use as described in the relevant operating instructions. Drivers must be taught how to operate the attachments.

Loads may only be picked up and transported with attachments if the loads are securely grasped and attached. Where necessary, loads must also be secured against slipping, rolling away, falling over, swinging or tipping over. Note that any change to the position of the load centre of gravity will affect the stability of the truck.

– Refer to the capacity rating plate for the attachments being used.

⚠ WARNING

If several hydraulic functions are used at the same time, these functions can influence each other.

For example, if the fork carriage is raised and an attachment is operated at the same time, this may change the lifting speed or the operating speed of the attachment.

NOTE

Further variants and functions are available in addition to the functions described below. The directions of movement can be seen in the pictograms on the operating devices.

NOTE

All the attachments described fall into the category of equipment variants. Please see the respective operating instructions for an exact description of the respective movements/actions of the attachment fitted.

With fleet manager access authorisation (variant), the fleet manager can adjust the speed of the auxiliary hydraulics for attachments.

– See also the section entitled "Adjusting the hydraulic speed for attachments" in this chapter.

Attachment example for the connection of the auxiliary hydraulics

NOTE

The authorised service centre will tell you which attachments can be used with this truck.

The connection of attachments to the auxiliary hydraulics is performed as per the diagram, as highlighted in the operating instructions for the attachment.

In the menu for the available hydraulic axles for attachments, the designation `Hydraulic axle` specifies the connection of the corresponding auxiliary hydraulics. See also the section entitled "Adjusting the hydraulic speed for attachments" in this chapter.

Attachment example for an attachment for adjustment of the fork arms ▷

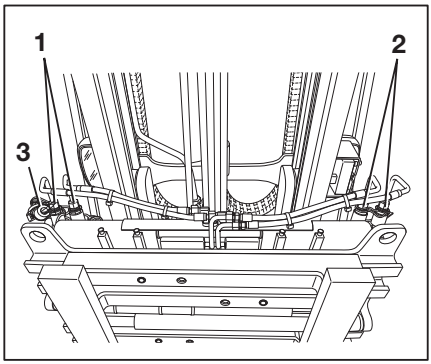

1 Auxiliary hydraulics 1
2 Auxiliary hydraulics 2
3 Electrical connection for switch valve 1 (two switch valves are possible)

If an attachment is connected to the auxiliary hydraulics 1 (1) and this attachment requires another function, this is referred to as the function of the auxiliary hydraulics 3.

There is an electrical connection (3) for the switch valve that is required for this purpose.

The same applies to the auxiliary hydraulics 4, which is fed from the auxiliary hydraulics 2 (2) and is implemented by an additional connection for a switch valve that is not shown here.

NOTE

If one switch valve is used, the auxiliary hydraulic functions 1 & 3 and 2 & 4 that are supplied by this switch valve cannot be operated simultaneously. The switch valve supplies either auxiliary hydraulics 1 & 3 or 2 & 4.

Adjusting the hydraulic speed for attachments

If different attachments are mounted, the fleet manager can adjust the hydraulic speed for attachments and thus the flow rate of hydraulic oil. Obtain the necessary values from the operating instructions for the attachment. The authorised service centre will help to make the correct adjustments.

The "Information on the auxiliary hydraulics" differs depending on the truck. Take this into consideration when selecting the attachment.

NOTE

The adjustment procedure requires access authorisation for the fleet manager. Access to the settings menu is only available if the truck is at a standstill and the parking brake is applied. If the parking brake is released prematurely, the settings menu will close.

– Apply the parking brake.

– Press the button.

– Press the "Settings" Softkey .

– Activate the "Access authorisation for the fleet manager".

– Push the "Auxiliary hydraulics" Softkey.

This menu lists all the available hydraulic axles for attachments.

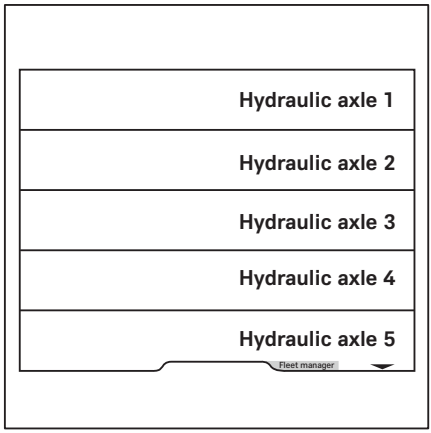

– Refer to the operating instructions of the attachment to determine which hydraulic axle is occupied by the attachment.

The authorised service centre will help you determine the axles.

Setting the revolution speed

– Push the softkey for the hydraulic axle to be configured.

This menu indicates the supply flow.

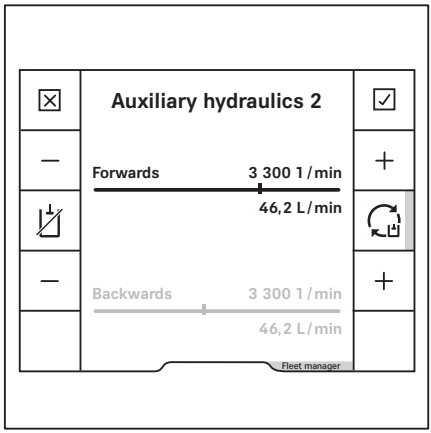

The return flow is shown in a lighter colour.

- The currently set speed of the hydraulic pump is given in `rpm`
- The currently set supply flow rate is given in `L/min`.

NOTE

The supply flow rate depends on the speed.

The return flow automatically adjusts to the set supply flow. When the orange activation bar next to the "Synchronise auxiliary hydraulics" softkey lights up, synchronisation takes place automatically. The return flow is shown only dimly on the display.

To adjust the speed, push the "Plus" + or "Minus" – softkey.

– To save the setting, press the "Confirm" softkey.

The settings are saved.

– To cancel the setting, press the "Cancel" softkey.

The settings return to the most recently set value.

Locking the flow rate

You can also lock the hydraulic oil flow rate in full.

– To do this, push the "Deactivate auxiliary hydraulics" softkey .

The hydraulic oil flow rate for this hydraulic axle is locked.

Setting the return flow rate separately

Depending on the attachment, the return flow rate may need to be set separately.

– To do this, push the "Synchronise auxiliary hydraulics" softkey .

The return flow is displayed in addition to the supply flow at full brightness.

To adjust the speed, push the "Plus" + or "Minus" – softkey.

– To save the setting, press the "Confirm" ☑ softkey.

The settings are saved.

– To cancel the setting, press the "Cancel" ☒ softkey.

The settings return to the most recently set value.

▷

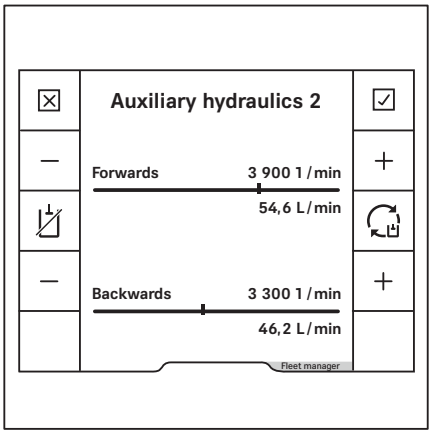

Controlling attachments using a double mini-lever ▷

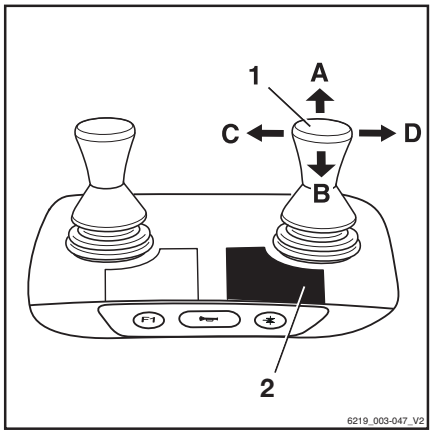

In this version, the attachments (variant) are controlled using the "attachments" cross lever (1). The adhesive label bearing the pictograms for the hydraulic functions (2) is affixed at the designated point.

– If the adhesive label becomes illegible or is missing, please contact your authorised service centre.

– Observe the pictograms for the attachment functions on the adhesive label (2).

The pictograms on the "attachments" cross lever (1) show the respective functions that are activated by this lever.

The pictograms are arranged according to the direction of movement of the "attachments" cross lever (1).

The following applies:

– Move the "attachments" cross lever(1) in the direction of arrow (A), (B), (C) or (D).

The attachment moves accordingly in the directions (A), (B), (C) or (D) as shown in the pictogram.

Pictogram	Attachment function
	Move the side shift frame or fork forwards
	Move the side shift frame or fork backwards
	Move the sideshift to the left
	Move sideshift to the right
	Adjust fork arms: open
	Adjust fork arms: close
	Release load retainer
	Clamp load retainer
	Open clamps
	Close clamps
	Rotate to the left
	Rotate to the right
	Tip shovel over
	Tip shovel back

NOTE

The pictograms are affixed according to the attachment fitted at the factory. If an attachment with different functions is fitted, the authorised service centre must check that the pictograms bear the correct representation and must change them if necessary.

Clamp locking mechanism

▷

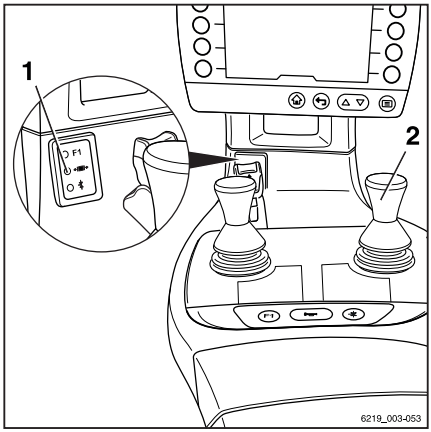

– To release the clamp locking mechanism, push the operating lever (2) forwards.

The clamp locking mechanism is released. The LED for the "clamp release" (1) lights up and remains lit while the clamp locking mechanism is released.

NOTE

The hydraulic function for opening the clamp is available for one second after the clamp locking mechanism is released. After one second, the clamp locking mechanism is automatically reactivated.

– To open the clamp, push the operating lever (2) forwards again.

It is not necessary to release the clamp locking mechanism in order to close the clamp.

– To close the clamp, pull the operating lever (2) backwards.

Controlling attachments using the double mini-lever and the 5th function

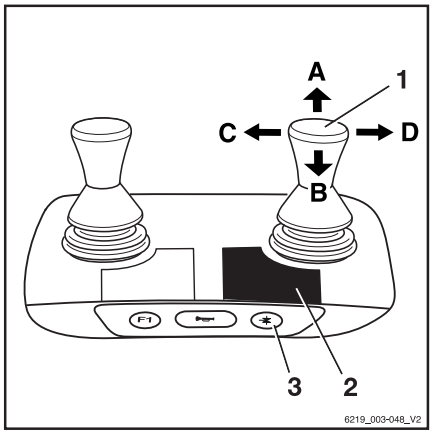

NOTE

For technical reasons, clamping attachments ***must not*** *be controlled via the "5th function".*

The function key for the "5th function" (3) and the cross lever (1) are used to control the "5th function".

The adhesive label bearing the pictograms for the hydraulic functions (2) is affixed at the designated point.

– If the adhesive label becomes illegible or is missing, please contact your authorised service centre.

– Observe the pictograms for the attachment functions on the adhesive label (2).

The pictograms on the "attachments" cross lever show the respective functions that are activated by this lever.

The following applies:

– Actuate the function key for the "5th function" (3).

The LED for the "5th function" lights up.

– Move the "attachments" cross lever (1) in the direction of the arrow (A), (B), (C) or (D).

The attachment moves accordingly in the directions (A), (B), (C) or (D) as shown in the pictogram.

Example using the pictograms for configuration (1):

If the "attachments" cross lever (1) is moved in the direction of the arrow (A), the fork is extended.

If the function key for the "5th function" (3) is actuated and the "attachments" cross lever (1) is moved in the direction of the arrow (A), the fork arms open.

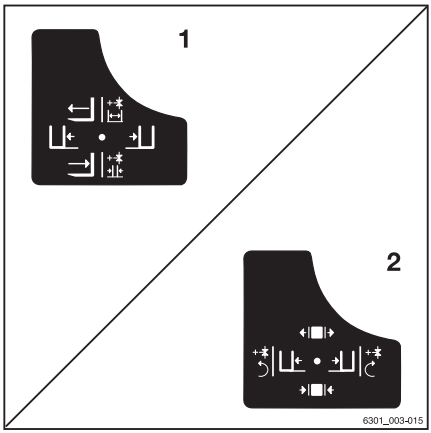

Pictogram	Attachment function
	Auxiliary hydraulics "5th function"
	Move the side shift frame or fork forwards
	Move the side shift frame or fork backwards
	Move the sideshift to the left
	Move sideshift to the right
	Adjust fork arms: open
	Adjust fork arms: close
	Rotate to the left
	Rotate to the right

NOTE

The pictograms are affixed according to the attachment fitted at the factory. If an attachment with different functions is fitted, the authorised service centre must check that the pictograms bear the correct representation and must change them if necessary.

Controlling attachments using a triple mini-lever ▷

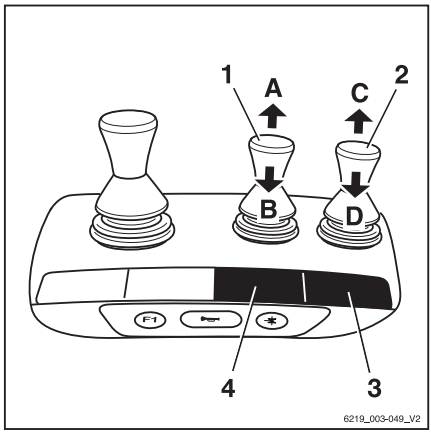

In this version, the attachments (variant) are controlled using the operating levers (1, 2). The adhesive label bearing the pictograms for the hydraulic functions (3) for the operating lever (2) and the adhesive label (4) for the operating lever (1) are affixed at the designated points.

– If the adhesive labels become illegible or are missing, please contact your authorised service centre.

– Observe the pictograms for the attachment functions on the adhesive labels (3, 4).

The pictograms on the operating levers show the respective functions that are activated by these levers.

The following applies:

– Move the operating lever (1) in the direction of the arrow (A) or (B).

The attachment moves accordingly in the directions (A) or (B) as shown in the pictogram.

– Move the operating lever (2) in the direction of the arrow (C) or (D).

The attachment moves accordingly in the directions (C) or (D) as shown in the pictogram.

Pictogram	Attachment function
	Move the side shift frame or fork forwards
	Move the side shift frame or fork backwards
	Move the sideshift to the left
	Move sideshift to the right
	Adjust fork arms: open
	Adjust fork arms: close
	Release load retainer
	Clamp load retainer
	Open clamps
	Close clamps
	Rotate to the left
	Rotate to the right

Picto-gram	Attachment function
	Tip shovel over
	Tip shovel back

NOTE

The pictograms are affixed according to the attachment fitted at the factory. If an attachment with different functions is fitted, the authorised service centre must check that the pictograms bear the correct representation and must change them if necessary.

Clamp locking mechanism

▷

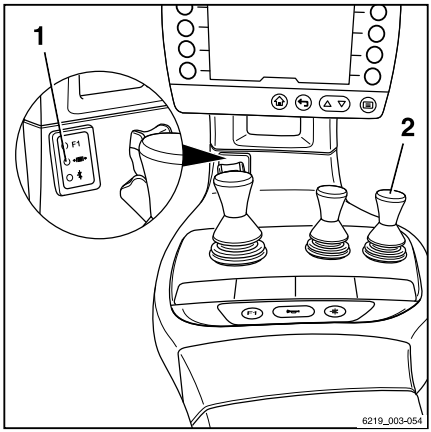

– To release the clamp locking mechanism, push the operating lever (2) forwards.

The clamp locking mechanism is released. The LED for the "clamp release" (1) lights up and remains lit while the clamp locking mechanism is released.

NOTE

The hydraulic function for opening the clamp is available for one second after the clamp locking mechanism is released. After one second, the clamp locking mechanism is automatically reactivated.

– To open the clamp, push the operating lever (2) forwards again.

It is not necessary to release the clamp locking mechanism in order to close the clamp.

– To close the clamp, pull the operating lever (2) backwards.

Controlling attachments using the triple mini-lever and the 5th function

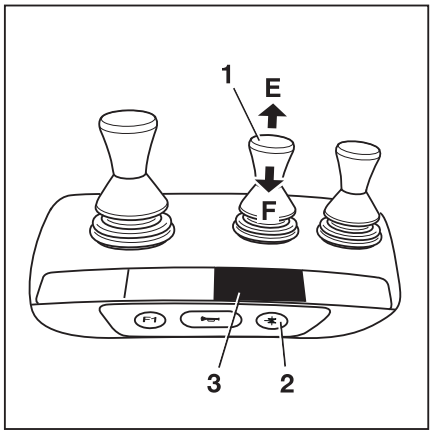

NOTE

For technical reasons, clamping attachments ***must not*** *be controlled via the "5th function".*

The function key for the "5th function" (2) and the operating lever (1) are used to control the "5th function".

The adhesive label bearing the pictograms for the hydraulic functions (3) is affixed at the designated point.

– If the adhesive label becomes illegible or is missing, please contact your authorised service centre.

– Observe the pictograms for the attachment functions on the adhesive label (3).

The pictograms on the operating lever show the respective functions that are activated by this lever.

The following applies:

– Actuate the function key for the "5th function" (2).

The LED for the "5th function" ✱ lights up.

– Move the operating lever (1) in the direction (E) or (F).

The attachment moves accordingly in the directions (E) or (F) as shown in the pictogram.

Example using the pictograms for configuration (1):

If the operating lever (1) is moved in the direction of the arrow (E), the sideshift moves to the left.

If the function key for the "5th function" (2) is actuated and the operating lever (1) is moved in the direction of the arrow (E), the fork arms open.

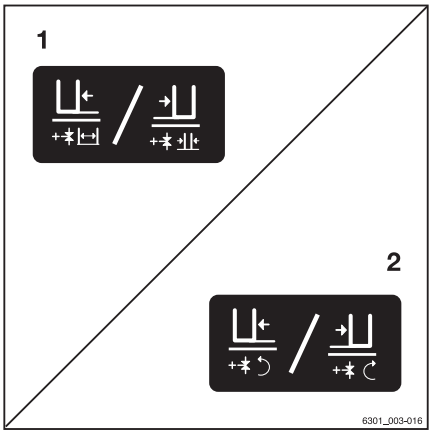

Pictogram	Attachment function
	Auxiliary hydraulics "5th function"
	Move the sideshift to the left
	Move sideshift to the right
	Adjust fork arms: open
	Adjust fork arms: close
	Rotate to the left
	Rotate to the right

NOTE

The pictograms are affixed according to the attachment fitted at the factory. If an attachment with different functions is fitted, the authorised service centre must check that the pictograms bear the correct representation and must change them if necessary.

Controlling attachments using a quadruple mini-lever ▷

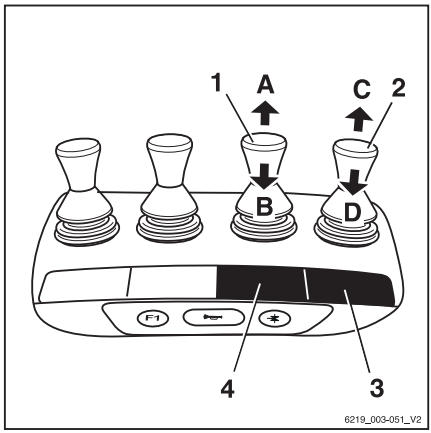

In this version, the attachments (variant) are controlled using the operating levers (1, 2). The adhesive label bearing the pictograms for the hydraulic functions (3) for the operating lever (2) and the adhesive label (4) for the operating lever (1) are affixed at the designated points.

– If the adhesive labels become illegible or are missing, please contact your authorised service centre.

– Observe the pictograms for the attachment functions on the adhesive labels (3, 4).

The pictograms on the operating levers show the respective functions that are activated by these levers.

The following applies:

– Move the operating lever (1) in the direction of the arrow (A) or (B).

The attachment moves accordingly in the directions (A) or (B) as shown in the pictogram.

– Move the operating lever (2) in the direction of the arrow (C) or (D).

The attachment moves accordingly in the directions (C) or (D) as shown in the pictogram.

Pictogram	Attachment function
	Move the side shift frame or fork forwards
	Move the side shift frame or fork backwards
	Move the sideshift to the left
	Move sideshift to the right
	Adjust fork arms: open
	Adjust fork arms: close
	Release load retainer
	Clamp load retainer
	Open clamps
	Close clamps
	Rotate to the left
	Rotate to the right

Picto-gram	Attachment function
	Tip shovel over
	Tip shovel back

NOTE

The pictograms are affixed according to the attachment fitted at the factory. If an attachment with different functions is fitted, the authorised service centre must check that the pictograms bear the correct representation and must change them if necessary.

Clamp locking mechanism

▷

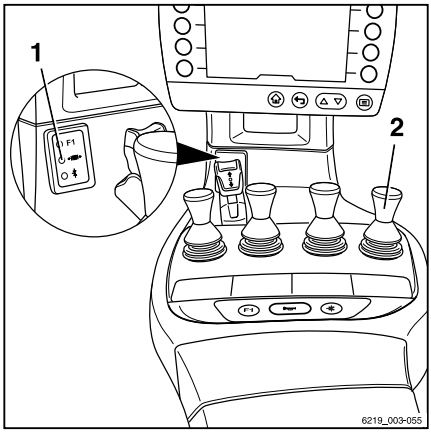

– To release the clamp locking mechanism, push the operating lever (2) forwards.

The clamp locking mechanism is released. The LED for the "clamp release" (1) lights up and remains lit while the clamp locking mechanism is released.

NOTE

The hydraulic function for opening the clamp is available for one second after the clamp locking mechanism is released. After one second, the clamp locking mechanism is automatically reactivated.

– To open the clamp, push the operating lever (2) forwards again.

It is not necessary to release the clamp locking mechanism in order to close the clamp.

– To close the clamp, pull the operating lever (2) backwards.

Controlling attachments using the quadruple mini-lever and the 5th function

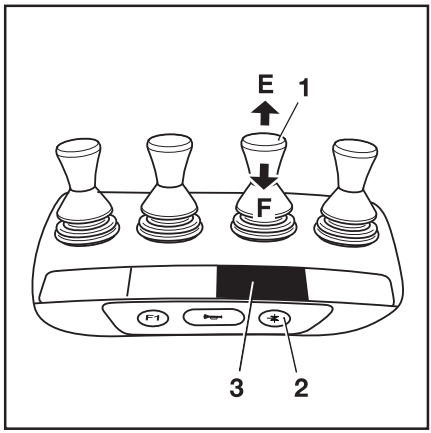

NOTE

For technical reasons, clamping attachments ***must not*** *be controlled via the "5th function".*

The function key for the "5th function" (2) and the operating lever (1) are used to control the "5th function".

The adhesive label bearing the pictograms for the hydraulic functions (3) is affixed at the designated point.

– If the adhesive label becomes illegible or is missing, please contact your authorised service centre.

– Observe the pictograms for the attachment functions on the adhesive label (3).

This essentially involves the following:

– Actuate the function key for the "5th function" (2).

The LED for the "5th function" lights up.

– Move the operating lever (1) in the direction (E) or (F).

The attachment moves accordingly in the directions (E) or (F) as shown in the pictogram.

Example using the pictograms for configuration (1):

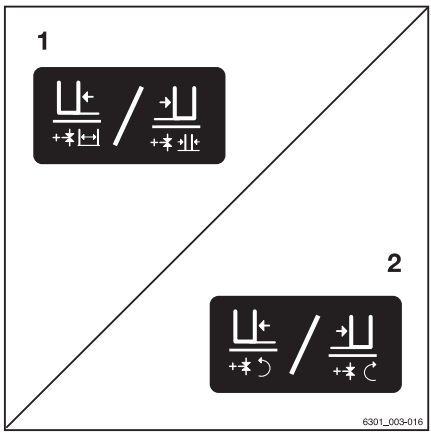

If the operating lever (1) is moved in the direction of the arrow (E), the sideshift moves to the left.

If the function key for the "5th function" (2) is actuated and the operating lever (1) is moved in the direction of the arrow (E), the fork arms open.

Pictogram	Attachment function
	Auxiliary hydraulics "5th function"
	Move the sideshift to the left
	Move sideshift to the right
	Adjust fork arms: open

Picto-gram	Attachment function
	Adjust fork arms: close
	Rotate to the left
	Rotate to the right

NOTE

The pictograms are affixed according to the attachment fitted at the factory. If an attachment with different functions is fitted, the authorised service centre must check that the pictograms bear the correct representation and must change them if necessary.

Controlling attachments using the Joystick 4Plus

In this equipment, the attachments (variant) are controlled using the Joystick 4Plus (1).

The pictograms on the decal information regarding operation of the Joystick 4Plus show the respective functions that are activated by the individual operating devices of the Joystick 4Plus.

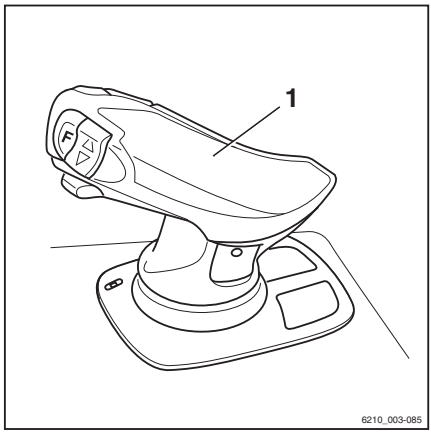

– Observe the following attachment functions and pictograms.

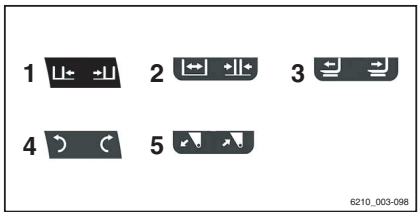

	Operating device	Function of the attachment
1	Joystick 4Plus	Move sideshift to the left/right
2	Joystick 4Plus or slider	Adjust fork arms: open/close
3	Slider	Move side shift frame or fork carriage forwards/backwards
4	Joystick 4Plus or slider	Rotate attachment left/right
5	Slider	Tip shovel over/tip shovel back

NOTE

The pictograms are affixed according to the attachment fitted at the factory. If an attachment with different functions is fitted, the authorised service centre must check that the pictograms bear the correct representation and must change them if necessary.

Controlling attachments with Joystick 4Plus and the 5th function

NOTE

*For technical reasons, clamping attachments **must not** be controlled via the 5th function.*

NOTE

The 5th hydraulic function can be used to control an attachment. The pictograms on the Joystick 4Plus show which attachment functions can be controlled using the 5th function.

For attachments that are controlled using the 5th hydraulic function, the procedures for operation are as follows:

- Press and hold shift key "F" (1) on the Joystick 4Plus.
- Simultaneously actuate the horizontal rocker button (2) in the direction shown in the pictogram.

The attachment moves in the selected direction.

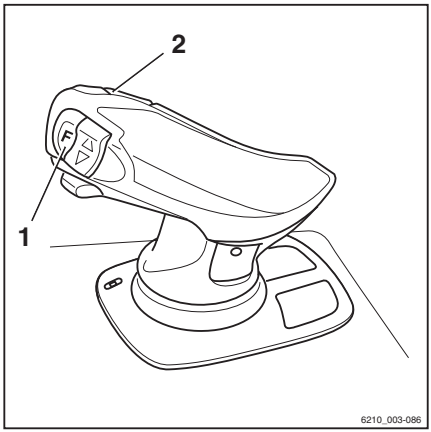

NOTE

The pictograms are affixed according to the attachment fitted at the factory. If an attachment with different functions is fitted, the authorised service centre must check that the pictograms bear the correct representation and must change them if necessary.

Controlling attachments using the Fingertip

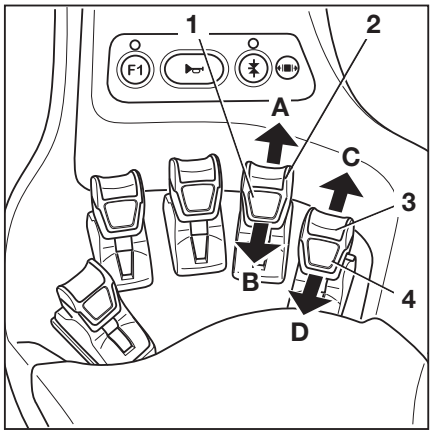

In this version, the attachments (variant) are controlled using the operating levers (1) and (2). The adhesive label bearing the pictograms for the hydraulic functions (3) for the operating lever (2) and the adhesive label (4) for the operating lever (1) are affixed at the designated points.

– If the adhesive labels become illegible or are missing, please contact your authorised service centre.

– Observe the pictograms for the attachment functions on the adhesive labels (3, 4).

The pictograms on the operating levers show the respective functions that are activated by these levers.

The following applies:

– Move the operating lever (1) in the direction of the arrow (A) or (B).

The attachment moves accordingly in the directions (A) or (B) as shown in the pictogram.

– Move the operating lever (2) in the direction of the arrow (C) or (D).

The attachment moves accordingly in the directions (C) or (D) as shown in the pictogram.

Pictogram	Attachment function
	Move the side shift frame or fork forwards
	Move the side shift frame or fork backwards
	Move the sideshift to the left
	Move sideshift to the right
	Adjust fork arms: open
	Adjust fork arms: close
	Release load retainer
	Clamp load retainer
	Open clamps
	Close clamps
	Rotate to the left
	Rotate to the right

Picto-gram	Attachment function
	Tip shovel over
	Tip shovel back

NOTE

The pictograms are affixed according to the attachment fitted at the factory. If an attachment with different functions is fitted, the authorised service centre must check that the pictograms bear the correct representation and must change them if necessary.

Clamp locking mechanism

▷

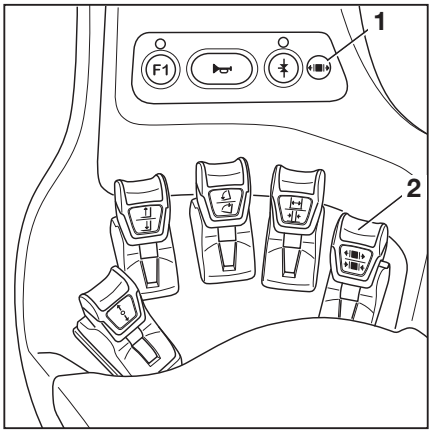

– To release the clamp locking mechanism, push the operating lever (2) forwards.

The clamp locking mechanism is released. The LED for the "clamp release" (1) lights up and remains lit while the clamp locking mechanism is released.

NOTE

The hydraulic function for opening the clamp is available for one second after the clamp locking mechanism is released. After one second, the clamp locking mechanism is automatically reactivated.

– To open the clamp, push the operating lever (2) forwards again.

It is not necessary to release the clamp locking mechanism in order to close the clamp.

– To close the clamp, pull the operating lever (2) backwards.

Controlling attachments using the Fingertip and the 5th function

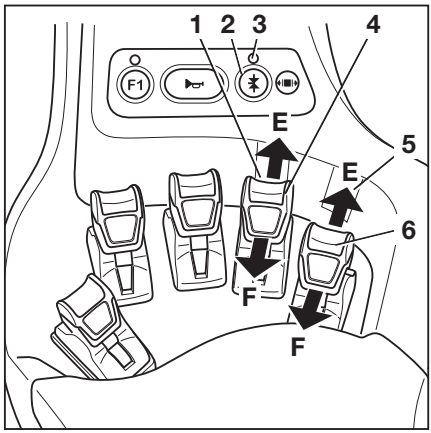

NOTE

*For technical reasons, clamping attachments **must not** be controlled via the 5th function.*

The function key for the "5th function" (2) and the operating levers (1, 6) are used to control the "5th function".

The pictograms (1, 5) behind the operating levers show the functions that are activated by the respective levers.

– If the adhesive labels become illegible or are missing, please contact your authorised service centre.

The following applies:

– Actuate the function key for the "5th function" (2).

The LED for the "5th function" (3) lights up.

– Move the operating lever (4) or (6) in the direction of the arrow (E) or (F).

The attachment moves accordingly in the directions (E) or (F) as shown in the pictogram.

NOTE

The place where the adhesive label bearing the pictograms (1) or (5) is affixed shows which operating lever is intended to operate the "5th function". The pictograms show the functions that are activated by switching with the function key (2).

Pictogram	Attachment function
	Auxiliary hydraulics "5th function"
	Move the sideshift to the left
	Move sideshift to the right
	Adjust fork arms: open
	Adjust fork arms: close
	Rotate to the left
	Rotate to the right

NOTE

The pictograms are affixed according to the attachment fitted at the factory. If an attachment with different functions is fitted, the authorised service centre must check that the pictograms bear the correct representation and must change them if necessary.

Clamp locking mechanism (variant)

This truck can be fitted with a clamp locking mechanism for clamping attachments. The clamp locking mechanism prevents the clamp from opening unintentionally if the operating function is inadvertently triggered.

DANGER

If the correct function of the clamp locking mechanism is not guaranteed, there is a risk to life from a falling load!

If other attachments in addition to the clamp are used on this truck, the clamp locking mechanism must be reassigned to the corresponding operating device every time the clamp is reassembled.

- Make sure that the authorised service centre reassigns the function of the clamp locking mechanism to the corresponding operating device.
- Make sure that the additional clamp locking mechanism function is available.
- Observe the section entitled "Fitting attachments".

NOTE

*For technical reasons, clamping attachments **must not** be controlled via the "5th function".*

The sections entitled "Controlling attachments using ..." describe how the clamp locking mechanism is operated.

- See the section concerning the relevant operating device.

Picking up a load using attachments

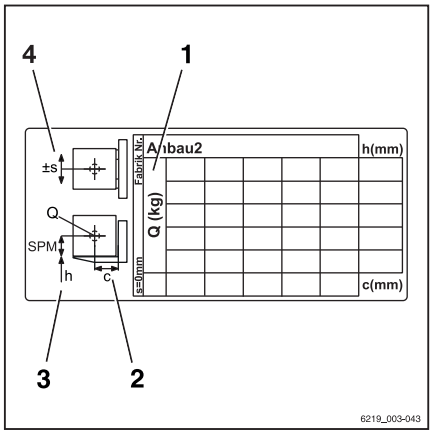

WARNING

Risk of accident!

Attachments must only be deployed for their intended use as described in the relevant operating instructions.

Drivers must be taught how to operate the attachments.

WARNING

Risk of accident!

Loads may only be picked up and transported with attachments if the loads are securely grasped and attached. If necessary, the loads must also be secured against slipping, rolling, falling over, swinging and tipping over. If the load centre of gravity is shifted, the stability changes.

- Observe stability when shifting the load centre of gravity.
- Check the capacity rating plates for the attachments or combination of attachments.

- Read the permissible values on the capacity rating plate.

1 Load capacity "Q" (kg)
2 Load distance "C" (mm)
3 Lift height "h" (mm)
4 Permissible sideshift "s" (mm)

Auxiliary equipment

Actuating the windscreen wipers and windscreen washers (variant)

Pressing the softkey switches between the operating stages in the sequence shown below.

Press softkey	Operating stage
	Off
First time	On
Second time	Intermittent
Third time	Off
Hold (possible in all operating stages)	Washer

Front windscreen wiper and washer

▷

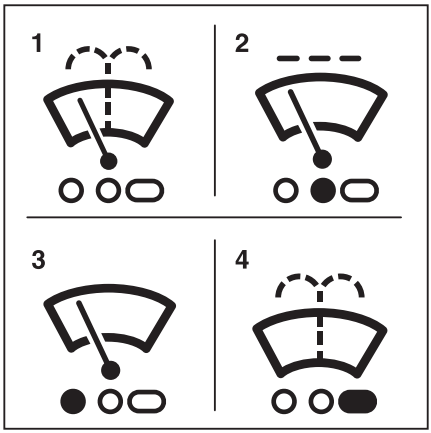

– To activate the "On" operating stage, press the softkey (1).

The "On" operating stage is activated. The symbol (3) appears.

– To activate the "Intermittent mode" operating stage, press the softkey again.

The symbol (2) is shown with an orange background.

– To activate the "Washer" operating stage, press and hold the softkey.

The "Washer" operating stage is activated. The symbol (4) is displayed for as long as the softkey is pressed.

– Once the window is clean, release the softkey.

NOTE

If the truck has a roof panel, activation of the "washer" operating stage for the windscreen simultaneously activates the wiper/washer function for the roof panel.

The previous operating stage is reactivated.

– To switch this operating stage off, press the softkey repeatedly until the symbol (1) ap-

pears again on the display. The activation bar next to the symbol goes out.

Rear window wiper and washer

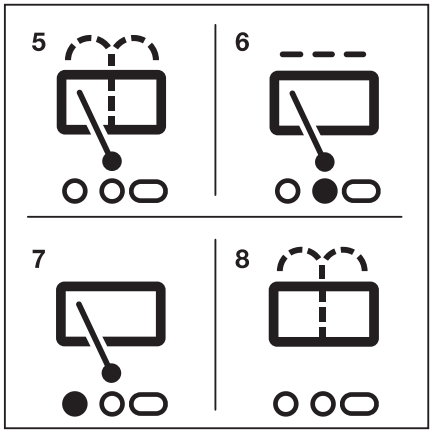

– To activate the "On" operating stage, press the corresponding softkey (5).

The "On" operating stage is activated. The symbol (7) appears.

– To activate the "Intermittent mode" operating stage, press the softkey again.

The symbol (6) is shown with an orange background.

– To activate the "Washer" operating stage, press and hold the softkey.

The "Washer" operating stage is activated. The symbol (8) is displayed for as long as the softkey is pressed.

– Once the window is clean, release the softkey.

The previous operating stage is reactivated.

– To switch this operating stage off, press the softkey repeatedly until the symbol (1) appears again on the display.

Roof panel wiper and washer

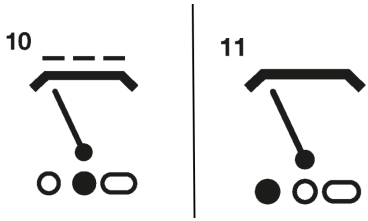

– To activate the "On" operating stage, press the corresponding softkey (9).

The "On" operating stage is activated. The symbol (11) appears.

– To activate the "Intermittent mode" operating stage, press the softkey again.

The symbol (10) is shown with an orange background.

– To switch off the operating stage, press the softkey again.

– To clean the roof panel, operate the "washer" function for the windscreen.

The "washer" functions for the windscreen and the roof panel are combined.

Filling the washer system

– Open the bonnet; see ⇒Chapter "Opening the bonnet", Page 423 .

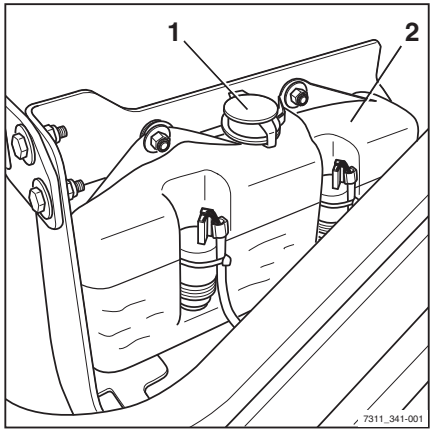

⚠ CAUTION

Components may become damaged due to the effects of frost!

Water expands when it freezes. If there is no anti-freeze in the washer system (variant), the system may be damaged due to the build up of ice in freezing conditions.

– Always use washer fluid containing anti-freeze.

– Open the filler cap (1) of the washer system container (2).

– Fill the windscreen washer fluid container with washer fluid containing anti-freeze in accordance with the maintenance data table (see ⇒Chapter "Maintenance data table", Page 420).

– Close the filler cap.

– Close the bonnet.

– Operate washer system until washer fluid is discharged from the spray nozzles.

FleetManager (variant)

FleetManager is an equipment variant and can be fitted to the truck in different versions. The description and operation information can be found in the separate operating instructions for the corresponding FleetManager versions.

Shock recognition (variant)

The shock recognition is an equipment variant of the FleetManager (variant) in which an acceleration sensor is installed in the truck. The acceleration sensor records data arising from rapid accelerations or decelerations of the truck, e.g. in the event of an accident. This data can be electronically read out and evaluated.

– If you have any questions, please contact your authorised service centre.

STILL neXXt fleet (variant)

STILL neXXt fleet is an equipment variant for efficient truck fleet control. The description and operation can be found in the separate operating instructions for the STILL neXXt fleet.

Driver restraint systems (variants)

Different driver restraint systems are available as variants for this truck. The description and operation for these systems can be found in the separate "Driver restraint systems" operating instructions.

Ceiling sensor (variant)

Description

The ceiling sensor (1) on the overhead guard is an assistance system that automatically reduces the driving speed of the truck within halls. However, this assistance system does not release the driver from the responsibility of observing the speed limits on company premises.

▷

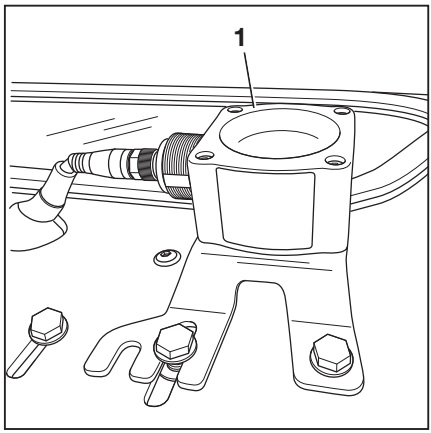

Depending on the system setting, the ceiling sensor can detect overhead structures above the truck at a height of 2 m to 24 m above the sensor.

If the truck is equipped with a ceiling sensor, this assistance system is listed in the "Assistance systems" menu in the display-operating unit.

Operating the ceiling sensor system

The drivers must be instructed on the use of the ceiling sensor system by the operating company.

When the driver enters a hall for the first time after starting work, they must be certain that the ceiling sensor system is working correctly. Despite the ceiling sensor system being installed, the driver must also check the speed indicator on the display-operating unit on a regular basis to ensure that they do not exceed

the maximum speed permitted for the environment.

- **Entering a hall**
  The ceiling sensor system automatically detects when the truck enters a hall. The system then automatically slows the truck to the maximum speed that is set for the hall. The "Speed restriction" symbol appears in the display.
- **Leaving a hall**
  If the truck leaves the hall again, the ceiling sensor system enables the maximum speed set for areas outside the hall. Due to the range of the sensor, this may not happen until the truck is a few metres away from the hall exit. Before the truck is able to accelerate to the maximum speed permitted for outdoor areas, the speed limitation must still be unlocked. To do this, release the accelerator briefly and then operate the accelerator again.
- **Switching on the truck in a hall**
  If the truck is switched on inside a hall, the ceiling sensor system detects the hall ceiling and reduces the driving speed to the maximum speed that is set for halls.

Possible limitations for object recognition

- If the truck moves under larger overhead structures outdoors, e.g. a pedestrian bridge, the ceiling sensor system may interpret this overhead structure to be a hall ceiling and reduce the maximum speed.
- In rare cases, it may occur that the ceiling sensor system does not recognize a ceiling and does not then reduce the speed. This can happen if the signals from the ceiling sensor are insufficiently reflected due to the ceiling geometry; for example, if there are large window areas at a 45° angle.

In these cases, the sensitivity and the range of the ceiling sensor system must be adjusted. See the following section.

Changing the sensor settings

NOTE

The ceiling sensor system is supplied by STILL with the following factory settings:

- *Sensitivity: High*
- *Ceiling height: 24 m*

– Park the truck securely and switch it off.

– Turn the union nut (4) anti-clockwise to loosen it. Disconnect the electrical connection assembly by pulling out the plug.

– On the underside of the assembly baseplate on the overhead guard, hold four nuts (3) in place.

– Unscrew four socket head screws (2).

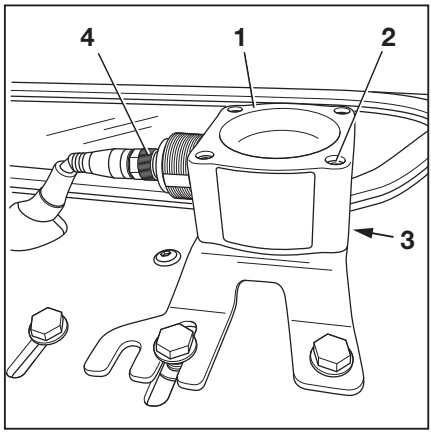

The key (5) is secured with a nut under the assembly baseplate.

– Carefully remove the ceiling sensor (1).

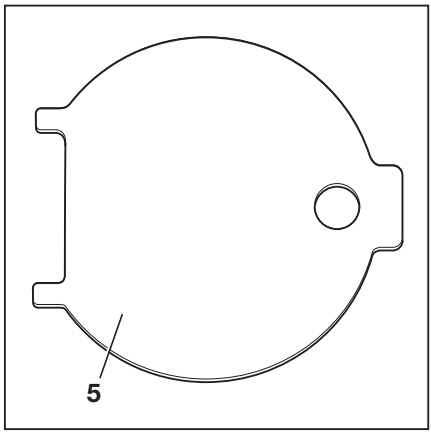

The sensor is adjusted using DIP switches (6). ▷

– To access the DIP switches, open the cover on the underside of the sensor housing with the key (5).

During this process, the two tabs of the key (5) fit into the recesses of the cover.

– Using the DIP switches "1 to 5" (6), adjust the range and the sensitivity of the sensor. The DIP switches can be adjusted using a small screwdriver.

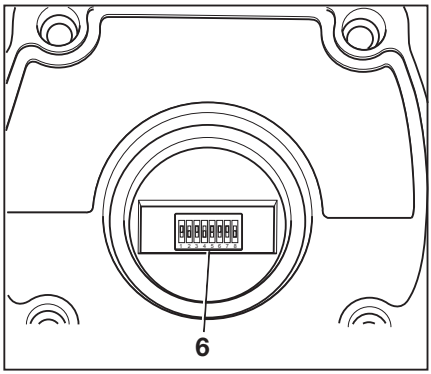

⚠ CAUTION

The settings for DIP switches "6 to 8" are the factory settings of the manufacturer.

Do **not** change the factory settings of the manufacturer!

Factory settings of the manufacturer

DIP switch		
6	7	8
1	1	0

The possible settings for DIP switches "1 to 5" are shown in the following tables:

DIP switch			
1	2	3	Range
0	0	0	2 m
0	0	1	3 m
0	1	0	4 m
0	1	1	6 m
1	0	0	8 m
1	0	1	12 m
1	1	0	16 m
1	1	1	24 m

4	5	Sensitivity
0	0	Very high
0	1	High
1	0	Medium
1	1	Low

Representation of the beam angle depending on the sensitivity of the sensor that has been set, from (1) "low" to (4) "very high". ▷

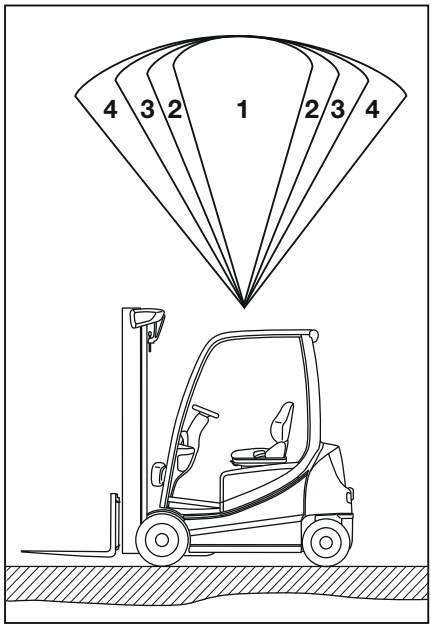

The sensor has different beam angles depending on the combination of range and sensitivity that has been set. See the following table:

Sensitivity	Range	Beam angle
Low (1)	2 m	22.5°
	4 m	22.5°
	8 m	20°
	16 m	15°
	24 m	5°
Medium (2)	2 m	35°
	4 m	30°
	8 m	25°
	16 m	22.5°
	24 m	10°

Sensitivity	Range	Beam angle
High (3)	2 m	42°
	4 m	33°
	8 m	22.5°
	16 m	20°
	24 m	15°
Very high (4)	2 m	45°
	4 m	43°
	8 m	30°
	16 m	22.5°
	24 m	18°

– After the adjustment, refit the cover.

– Refit the ceiling sensor and connect it.

– Check that it is working correctly.

Cab

Opening the cab door

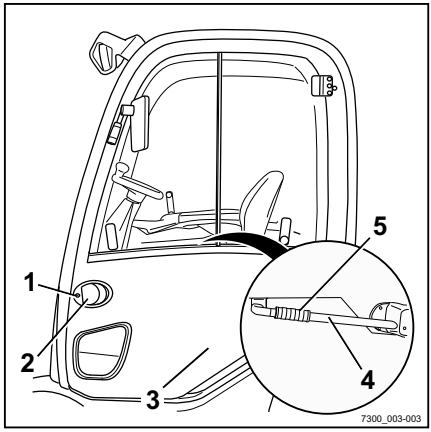

⚠ DANGER

There is a risk of damage caused by collision if the cab door opens while driving.

– The cab door must be latched securely in the engaged position.

Opening the cab door from the outside:

– Insert the key in the door lock (1), unlock the door and remove the key.

– To release the door, pull on the door handle (2) and open the cab door (3) outwards.

Opening the cab door from the inside:

– Turn the rotary handle (4) on the handle (5) and push the cab door outwards.

Closing the cab door

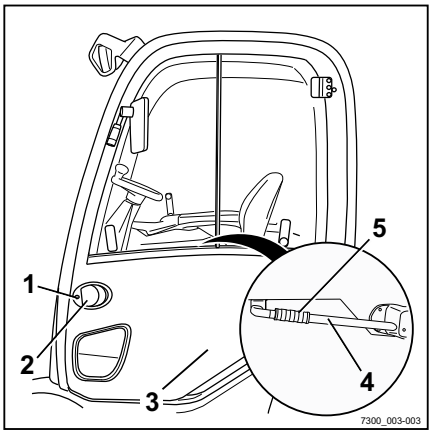

DANGER

There is a risk of damage caused by collision if the cab door opens while driving.

– The cab door must be latched securely in the engaged position.

Closing the cab door from the outside:

– Push the cab door (3) inwards until the door lock engages.

– Make sure that the cab door is fully closed.

– Insert the key in the door lock (1), lock the door and remove the key.

NOTE

Do not close the cab door while pulling the door handle (2), otherwise the locking mechanism in the lock will not function. Use the door handle only to open the cab door.

Closing the cab door from the inside:

– Take hold of the handle (5).

– Pull the cab door inwards until the door lock engages.

– Make sure that the cab door is fully closed.

NOTE

Do not turn the rotary handle (4) when closing the door or when the cab door is closed. Doing so will cause the lock to unlock, meaning that the door will not be securely closed. Use the rotary handle only to open the cab door.

Opening the side windows

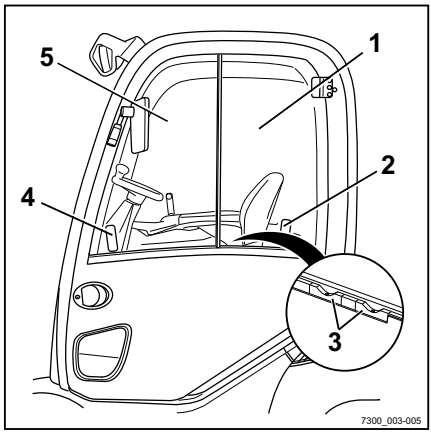

⚠ WARNING

There is a risk of crushing between the window frame and side window due to the side windows slipping inadvertently during travel.

– Make sure that the handle engages securely in the corresponding stop slot.

Opening the rear side window:

– Press the handle (2) together and slide the rear side window (1) forwards.

– Make sure that the handle engages in the stop slot (3).

Opening the front side window:

– Press the handle (4) together and slide the front side window (5) to the rear.

– Make sure that the handle engages in the stop slot (3).

Closing the side windows

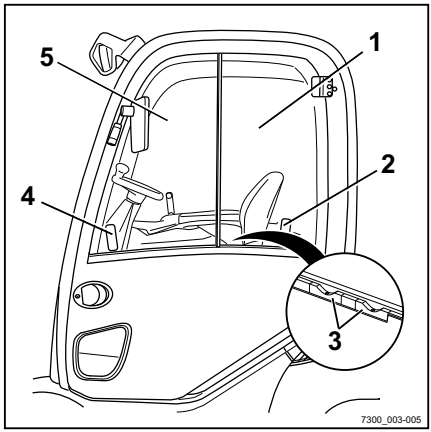

⚠ WARNING

There is a risk of crushing between the window frame and side window due to the side windows slipping inadvertently during travel.

– Make sure that the handle engages securely in the corresponding stop slot.

Closing the rear side window:

– Press the handle (2) together and pull the rear side window (1) to the rear.

– Make sure that the handle engages in the stop slot (3).

Closing the front side window:

– Press the handle (4) together and slide the front side window (5) forwards.

– Make sure that the handle engages in the stop slot (3).

Turning the interior lighting on or off (variant) ▷

– To turn the interior lighting on or off, press the push button switch (1) in the middle of the interior lighting.

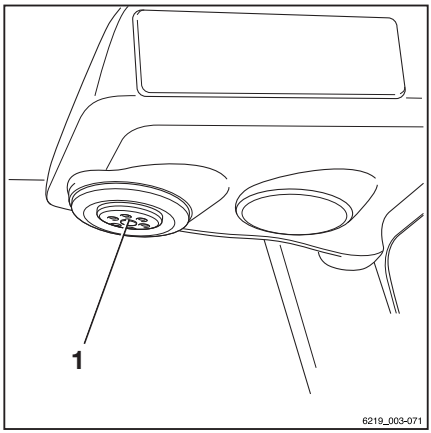

Operating the rear window heating ▷

– To switch on the rear window heating, push the associated Softkey on the display-operating unit.

The rear window heating is switched on.

– To switch off the rear window heating, push the Softkey again.

The rear window heating is switched off.

NOTE

The screen heating will switch off automatically after approx. 10 minutes.

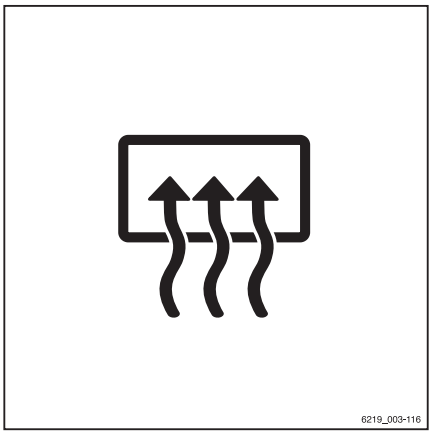

Radio (variant)

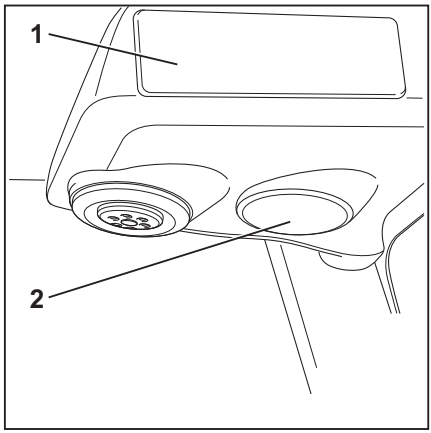

⚠ WARNING

Risk of accident as a result of impaired perception!

The driver's attention is adversely affected by operating the radio or listening to it at excessive volumes while driving or handling loads.

- Do not operate the radio when driving or when handling loads.
- Keep the radio at a volume that allows you to hear warning signals.

The radio (1) and the loudspeakers (2) are an equipment variant. If the truck is equipped with a radio and loudspeakers, they are integrated into the roof lining.

The description and information relating to the operation of this equipment can be found in the separate operating instructions for the radio.

Radio with Bluetooth interface (variant)

⚠ WARNING

The driver's attention is adversely affected by operating the radio or listening to it at excessive volumes while driving or handling loads. Risk of accident!

– Do not operate the radio when driving or when handling loads.

– Adjust the radio volume so that you can still hear warning signals.

Pairing a smartphone ▷

The Bluetooth interface on the radio is always active. The radio can be paired with a smartphone at any time using the Bluetooth function.

Carry out the following steps on your smartphone:

- Switch on the Bluetooth function.
- Go to the Bluetooth settings.
- Select the relevant device with the name of the radio.
- Enter the code 1234.

The symbols "A2DP" (4), "HFP" (5) and "Bluetooth" (6) appear on the radio display.

The smartphone is paired with the radio.

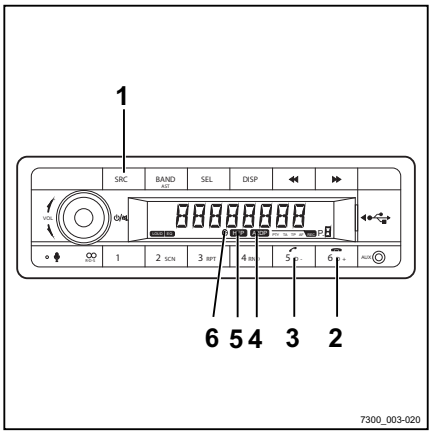

Unpairing a smartphone ▷

– Select mode "A2DP" (4) on the radio using the SRC button (1).

– Press and hold the 6D+ button (2) for 2 seconds.

The symbols "A2DP" (4), "HFP" (5) and "Bluetooth" (6) will disappear from the radio display.

The smartphone is no longer paired with the radio.

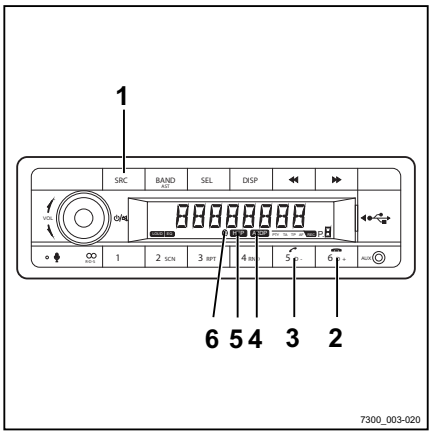

Hands-free device

Prerequisite: The smartphone is paired with the radio.

Incoming calls:

Regardless of the mode (Radio, AUX, A2DP), the ringtones are broadcast via the radio speaker.

– Accept the call using the smartphone or by pressing the button depicting a green handset (3).

– End the call using the smartphone or by pressing the button depicting a red handset (2).

Outgoing calls:

– Regardless of the mode (Radio, AUX, A2DP), dial the number on the smartphone and make the call.

The acoustic signals are automatically broadcast via the radio speaker.

– End the call using the smartphone or by pressing the button depicting a red handset (2).

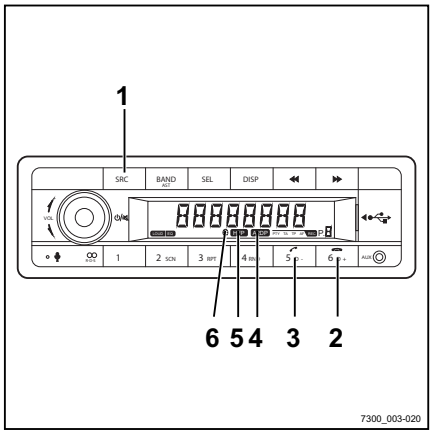

NOTE

The telephone number can also be selected via the radio; refer to the original operating instructions for the radio.

Wireless music playback (A2DP)

Prerequisite: The smartphone is paired with the radio.

– Select mode "A2DP" (4) on the radio using the SRC button (1).

– The music starts to play on the smartphone.

The music is broadcast via the radio speaker.

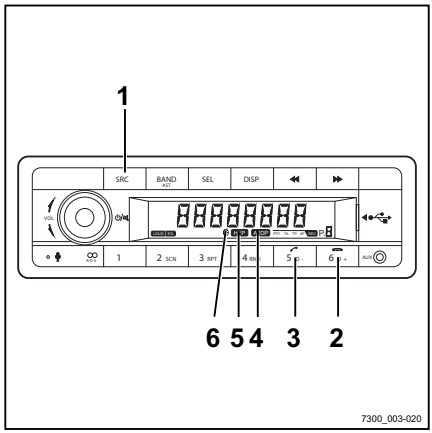

NOTE

For more general information and information on operating the system, refer to the original operating instructions for the radio.

Heating system (variant)

DANGER

There is a risk of poisoning if heavily polluted surrounding air is aspirated into the closed cab!

– Do not operate the heating system in the vicinity of storage areas or similar areas in which fuel vapours or fine dust (e.g. coal, wood or grain dust) can build up.

DANGER

Risk of explosion due to heat!

The heat can cause gases to expand considerably or to ignite.

– Do not expose spray cans or gas cartridges to the flow of hot air.

⚠ DANGER

Risk of fire due to overheating!

The heating system can overheat if the hot air cannot escape from it.

The heating system may only be switched on if the blower is running and the heating system is not covered by objects (such as a jacket or cover).

- Always switch the blower on first.
- Do not switch the heating system on until the blower is switched on.
- Move any objects away from the heating system or air distributors.

⚠ DANGER

The heating system housing can become very hot during heating operation. There is a risk of burns if it is touched!

- Do not touch the heating system housing during operation.
- Only touch the switches provided.

Operating devices of the heating system

▷

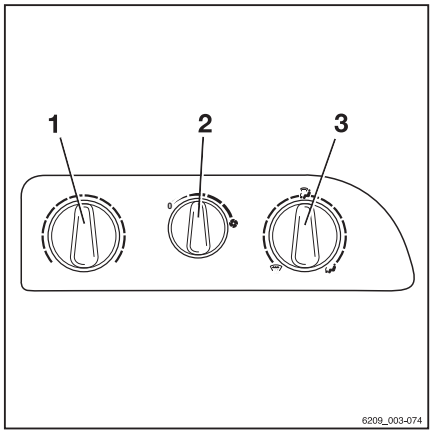

The operating devices of the heating system include:

1 Heating level control knob
2 Blower control knob
3 Air vent control knob

Switching on the blower and heating system

- Turn the blower control knob (2) to the desired blower level.

The blower runs at the speed level selected via the blower control knob (2).

- Turn the heating level control knob (1) to the desired heating level.

The heater warms the air to the heating level selected via the heating level control knob (1)

- Turn the air vent control knob (3) to the desired position.

Selecting blower levels

– To select a lower blower output, turn the blower control knob (2) anticlockwise.

– To select a high blower output, turn the blower control knob (2) clockwise.

Setting heating levels

– To set a lower heater power, turn the heating level control knob (1) anticlockwise.

– To set a higher heater power, turn the heating level control knob (1) clockwise.

Setting the air vent control knob

– To direct the air flow to the footwell, turn the air vent control knob (3) in an anticlockwise direction to the position.

– To direct the air flow to the windscreen, turn the air vent control knob (3) in a clockwise direction to the position.

The centre position directs the air flow to the footwell and the windscreen.

Switching off the heating system and blower

– Turn the heating level control knob (1) in an anticlockwise direction until it reaches the stop.

The heating system is shut down.

– Turn the blower control knob (2) in an anticlockwise direction until it reaches the stop.

The blower is shut down.

Adjusting the air distributors

The air distributors for the driver are always supplied with air. It is not necessary to adjust the heating system using the operating devices.

– To open the air distributor, push the indentation (1) on the disc.

The discs open.

– Grasp the discs to align the air flow:

The discs can be adjusted to the desired angle. The air distributor can be rotated.

– Press down again to close the discs.

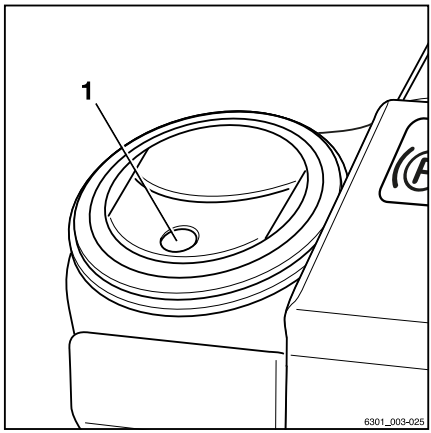

Changing fuses

DANGER

Risk of fire as a result of short circuits!

Using the wrong fuses can result in short circuits.

– Use only fuses with the prescribed nominal current.

– The fuses must be replaced only by the authorised service centre.

Air conditioning (variant)

The air conditioning dries the air in the cab to prevent the glass panes misting up. The temperature of the air that is blown out is based on the heating level that has been set.

The operating devices of the air conditioning include:

1 Fan control knob
2 Heating level control knob
3 On/off switch

– To adjust the air distributors and to control the blower positions, the heat settings and the air vent control knob, see the section entitled "Heating system (variant)".

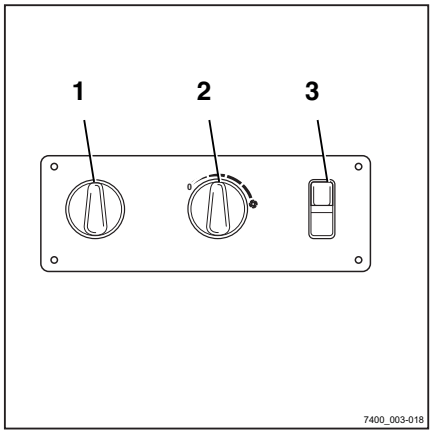

Switching the air conditioning on and off

– Push the on/off switch (3).

The LED on the switch lights up red. The air conditioning is switched on.

– Press the on/off switch (3) again.

The LED on the switch goes out. The air conditioning is switched off.

Clipboard (variant) ▷

The clipboard (1) with reading lamp (2) is an equipment variant.

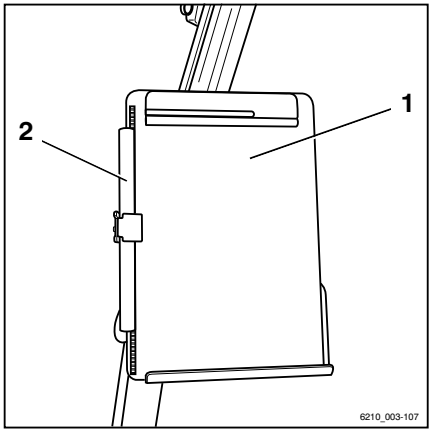

Push-up roof window (variant) ▷

⚠ WARNING

Risk of crushing!

– When closing the roof window, do not reach between the roof window and the overhead guard.
– Do not reach in to touch the components as they are being closed.

The push-up roof window (1) can be pushed up to and locked in three positions:

- Pushed up at the front
- Pushed up at the rear
- Completely pushed up

Two handles (2, 5) and two locking bolts (3, 4) are located on the right-hand side for this purpose.

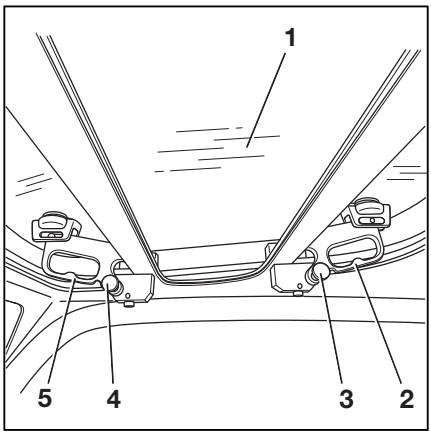

– To push up and close the roof window, stop the truck and apply the parking brake.

Pushing up and closing the roof window at the front

– To push up the roof window, pull out the locking bolt (4) with your right hand and keep hold of the locking bolt.

– Use your left hand to take hold of the handle (5) on the roof window (1) and push upwards until the locking bolt (4) engages.

The roof window (1) is held in the pushed-up position

– To close the roof window, pull out the locking bolt (4) with your right hand and keep hold of the locking bolt.

– Use your left hand to take hold of the handle (5) on the roof window (1) and pull down until the locking bolt (4) engages.

The roof window (1) is closed.

Pushing up and closing the roof window at the rear

– To push up the roof window, pull out the locking bolt (3) with your left hand and keep hold of the locking bolt.

– Use your right hand to take hold of the handle (2) on the roof window (1) and push upwards until the locking bolt (3) engages.

The roof window (1) is held in the pushed-up position

– To close the roof window, pull out the locking bolt (3) with your left hand and keep hold of the locking bolt.

– Use your right hand to take hold of the handle (2) on the roof window (1) and pull down until the locking bolt (3) engages.

The roof window (1) is closed.

Pushing up and closing the roof window completely

– Follow the same steps as previously described to push up and close the roof window.

12 V socket

A 12 V socket (1) is fitted to the right of the driver's seat for connecting an external electrical consumer.

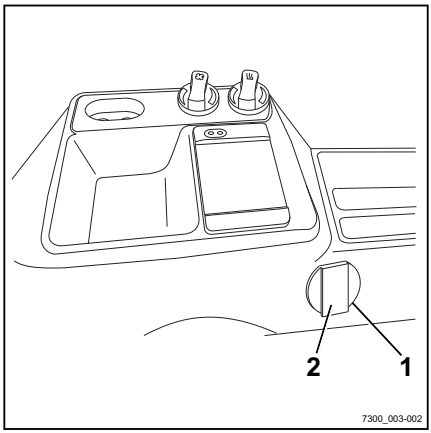

⚠ CAUTION

Risk of short circuit!

The nominal current of the connected consumer must not exceed 10 A.

– Before connecting, check the nominal current of the device in question.

– Lift up the dust guard cover (2).
– Insert the plug of the device to be connected into the socket (1).
– Rest the dust guard cover on the plug.
– Perform a functional check of the electrical connection on the connected device.

⚠ CAUTION

Malfunctions possible.

The exposed socket may become dirty and dusty if no plug is inserted or the dust guard cover is not closed. Over time, this can lead to problems with the electrical connection.

– Push the dust guard cover all the way down after using the socket.

Trailer operation

Towed load

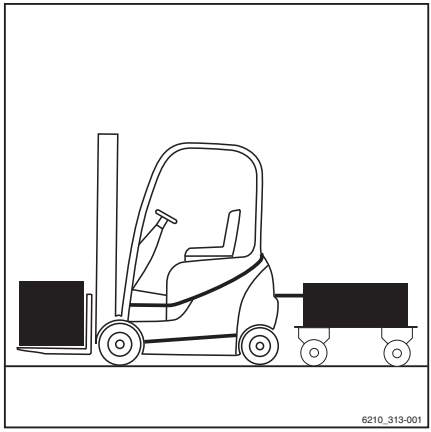

⚠ DANGER

There is an increased risk of accident when using a trailer.

Using a trailer changes the truck handling characteristics. When towing, operate the truck such that the trailer train can be safely driven and braked at all times. The maximum permissible speed when towing is 5 km/h.

- Do not exceed the permissible speed of 5 km/h.
- Do not couple the truck in front of rail vehicles.
- The truck must not be used to push any kind of trolley.
- It must be possible to drive and brake at all times.

⚠ CAUTION

Risk of damage to components!

The maximum towed load for occasional towing is the rated capacity specified on the nameplate. Overloading can lead to component damage on the truck. The sum of the actual towed load and the actual load on the fork must not exceed the rated capacity. If the existing towed load corresponds to the rated capacity of the truck, no load may be transported on the fork at the same time. The load can be distributed between the fork and the trailer.

- Check the load distribution and adjust it to correspond to the rated capacity.
- Observe the permissible rigidity value of the tow coupling.

⚠ CAUTION

Risk of damage to components!

The maximum towed load only applies when towing unbraked trailers on a level surface (maximum deviation +/- 1%) and on firm ground. The towed load must be reduced if towing on gradients. If necessary, notify the authorised service centre of the application conditions. The service centre will provide the required data.

- Inform the authorised service centre.

⚠ CAUTION

Risk of damage to components!

A support load is not permitted.

– Do not use trailers with tillers supported by the tow coupling.

This truck is suitable for the occasional towing of trailers. If the truck is equipped with a towing device, this occasional towing must not exceed 2% of the daily operating time. If the truck is to be used for towing on a more regular basis, the manufacturer should be consulted.

Coupling pin in the counterweight

Coupling the trailer

⚠ DANGER

If you leave the truck briefly to couple or uncouple the trailer, there is a risk of fatal injury from the truck rolling away.

– Apply the parking brake.
– Lower the fork to the ground.
– Switch off the key switch and remove the key.

– Take measures to prevent the trailer from rolling away, e.g. using wheel chocks (1). ▷

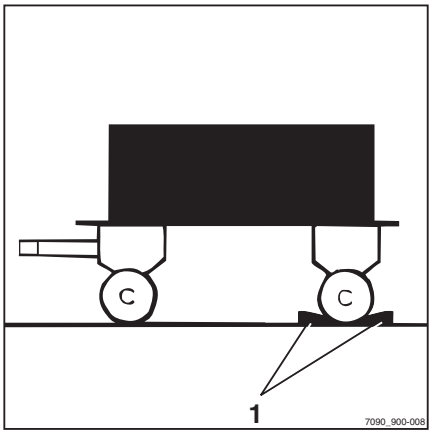

– Push the coupling pin (2) down, rotate by 90° and pull out.

– Adjust the tiller height.

⚠ DANGER

People can become trapped between the truck and trailer.

When coupling, ensure that there are no persons present between the truck and the trailer.

– Slowly move the truck backwards.

– By moving the truck back, introduce the tiller into the recess (3) in the counterweight.

⚠ DANGER

If the coupling pin or securing bush are lost or destroyed during towing, the trailer will work loose and become uncontrollable. This poses a risk of accident!

– Only use original coupling bolts that have been checked.

– Ensure that the coupling pin is correctly inserted and secured.

– Insert the coupling pin into the counterweight, press downwards against the spring pressure and rotate by 90° (the coupling pin is locked in this position).

– Remove any items used to prevent the trailer from rolling away.

Uncoupling the trailer

– Take measures to prevent the trailer from rolling away, e.g. using wheel chocks.

– Push the coupling pin (2) down, rotate by 90° and pull out.

– Slowly move the truck forwards and guide the tow-bar eye completely out of the counterweight.

– Insert the coupling pin into the counterweight, press downwards against the spring pressure and rotate by 90° (the coupling pin is locked in this position).

▷

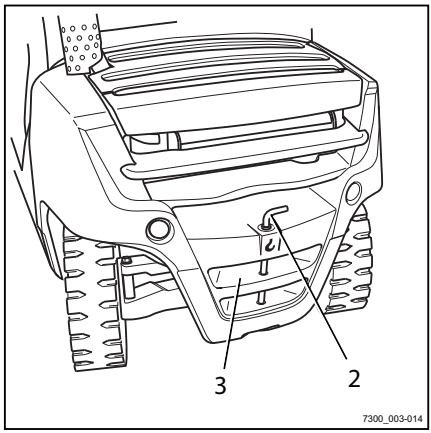

Automatic tow coupling

⚠ DANGER

People may be trapped between the truck and trailer.

When hooking up, ensure that no one is between the truck and trailer.

⚠ DANGER

Never jack up the truck on the tow coupling or use it for crane lifting. The tow coupling is not designed for this and could be deformed or damaged. This could cause the truck to fall, with potentially fatal consequences!

- Use the tow coupling only for towing.
- For jacking up and crane loading, use only the designated lifting points.

⚠ DANGER

The tow coupling is not designed to support loads and could become deformed or destroyed. This could cause the supported load to fall, with potentially fatal consequences!

- The tow coupling should be subjected only to horizontal loads, i.e. the tiller must be horizontal.

⚠ DANGER

If you briefly leave the truck to couple or uncouple the trailer, there is a risk to life caused by the truck rolling away and running you over.

- Apply the parking brake.
- Lower the forks to the ground.
- Switch off the key switch and remove the key.

⚠ WARNING

Never reach between the coupling pins and the towing jaws. If the component moves suddenly there is a risk of injury!

- To release the coupling pin, actuate the corresponding lever or use a suitable device (e.g. assembly lever).
- When not in use, close the automatic tow coupling.

⚠ WARNING

Risk of damage due to component collision.

A truck with tow coupling needs more room for manoeuvring due to its overhang. The tow coupling can damage the racking or the tow coupling itself when manoeuvring. If there is a collision with the tow coupling, test the tow coupling for damage such as cracks. A damaged tow coupling must not be used again.

- Always manoeuvre carefully and with sufficient room.
- In the case of a collision, test the tow coupling for damage.
- Replace tow coupling if damaged, if necessary contact the authorised service centre.

⚠ WARNING

Risk of damage to the tow bar eye or tiller!

Due to the truck's rear wheel steering, the side slewing angle of the tiller may not be adequate. The coupling or the tiller may be damaged! The tow bar eye of the tiller must fit the tow coupling in terms of shape and size.

- Ensure that the tow bar eye and tiller fit correctly.
- Avoid sharp cornering.
- Exercise care when travelling and manoeuvring in reverse.

⚠ WARNING

Risk of component damage if the tiller in the tow coupling is tilted!

The tiller should be kept as horizontal as possible when towing. This ensures that the rotation range is sufficient at the top and bottom. The authorised service centre can adjust the assembly height for the tow coupling to the tiller height if necessary.

- Make sure that the tiller is level.
- To change the coupling height, contact the authorised service centre.

Coupling model RO*243

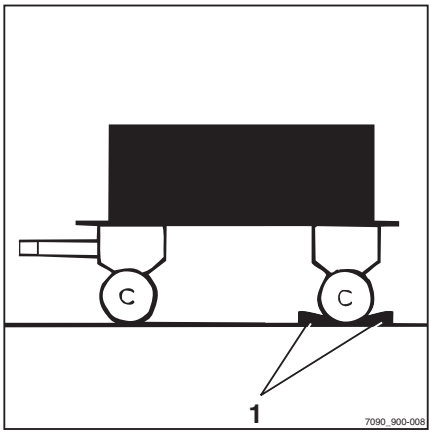

NOTE

Tow coupling RO 243 is intended for a tow-bar eye in accordance with DIN 74054 (bore diameter: 40 mm).

– Take measures to prevent the trailer from rolling away, e.g. use wheel chocks (1).

– Adjust the tow bar eye of the tiller so that it is at the centre of the towing jaws.

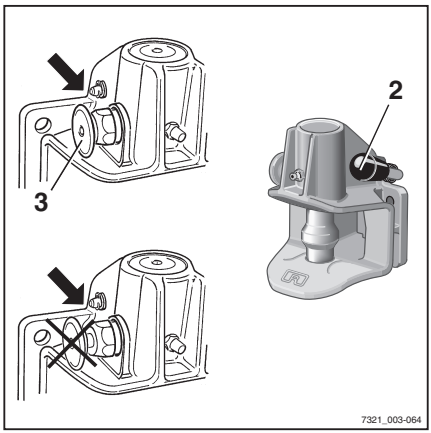

– Pull out the safety handle (3).

– Push the hand lever (2) upwards.

DANGER

Persons may become trapped between the truck and trailer.

When hooking up, ensure that no one is between the truck and trailer.

CAUTION

When being coupled, the tow-bar eye must engage in the middle of the coupling jaw. Failure to follow these instructions could result in damage to the coupling jaw or to the tow-bar eye!

– Ensure that the tow-bar eye enters the coupling jaw centrally.

– Slowly move the truck back.

DANGER

If the coupling pin drops out during towing, the trailer will work loose and can no longer be controlled. There is a risk of accident!

A protruding safety handle means that the tow bar eye has not been coupled correctly. The trailer must not be towed in this condition.

– Ensure that the safety handle is flush with the securing bush.

– If the safety handle protrudes, repeat the coupling process.

– Remove any items used to prevent the trailer from rolling away.

– Tow the trailer.

Closing model RO*243 by hand

⚠ DANGER

Risk of injury from hand becoming trapped!

Do not reach into the coupling pin area. If, for example, a tow rope is to be secured in the tow coupling, use only a suitable device to close the tow coupling (e.g. assembly lever).

– Use a suitable device (e.g. assembly lever) to push the coupling pin up.

The coupling pin is released from the latch and the tow coupling then closes automatically.

Uncoupling model RO*243

– Take measures to prevent the trailer from rolling away, e.g. use wheel chocks.

– Pull out the safety handle (3).

– Push the hand lever (2) upwards.

– Slowly drive the truck forwards until the towbar eye and towing jaws are disconnected.

– Close the tow coupling by hand.

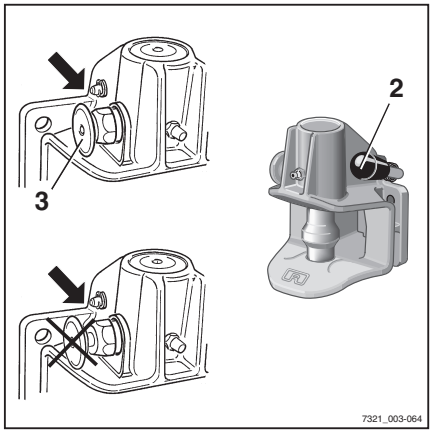

Coupling model RO*244 A

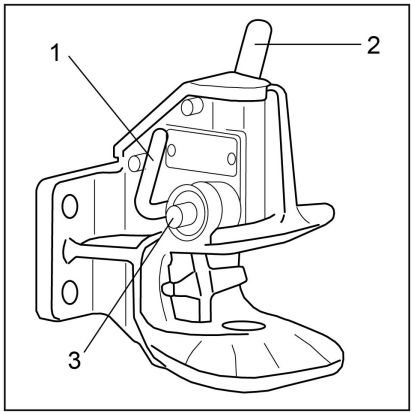

NOTE

Trailer coupling RO 244 is intended for a tow bar eye in accordance with DIN 74054 (bore diameter 40 mm) or DIN 8454 (bore diameter 35 mm).

– Take measures to prevent the trailer from rolling away, e.g. use wheel chocks.

– Adjust the tow bar eye of the tiller so that it is at the centre of the towing jaws.

– Push the hand lever (2) upwards until it snaps into place.

The tow coupling is opened.

DANGER

People can become trapped between the truck and trailer!

When hooking up, ensure that no one is between the truck and trailer.

CAUTION

When being coupled, the tow-bar eye must engage in the middle of the coupling jaw. Failure to follow these instructions could result in damage to the coupling jaw or to the tow-bar eye!

– Ensure that the tow-bar eye enters the coupling jaw centrally.

– Move the truck back slowly until the tow bar eye is inserted centrally into the coupling jaw of the tow coupling and the coupling pin engages.

NOTE

The coupling pin is correctly engaged if the control pin (3) does not protrude out of its guide.

⚠ DANGER

If the coupling pin drops out during towing, the trailer will work loose and can no longer be controlled. There is a risk of accident!

The control pin (3) must not protrude out of its guide.

– Ensure that the coupling pin is engaged correctly.

If the coupling pin is not correctly engaged:

– Remove any items used to prevent the trailer from rolling away.

– Move the truck with the trailer forwards approx. 1 m and then move it back slightly.

– On the coupling pin, check again that the control pin does not protrude out of its guide.

– Remove any items used to prevent the trailer from rolling away.

– Tow the trailer.

Closing model RO*244 A by hand

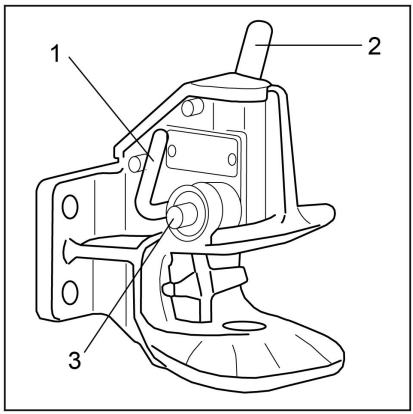

⚠ DANGER

Risk of injury from hand becoming trapped!

Do not reach into the coupling pin area. If, for example, a tow rope is to be secured in the tow coupling, only actuate the tow coupling via the closing lever (1).

– Press the closing lever (1) downwards as far as it will go.

The tow coupling is closed.

Uncoupling model RO*244 A

– Take measures to prevent the trailer from rolling away, e.g. use wheel chocks.

– Push the hand lever (2) upwards until it snaps into place.

The tow coupling is opened.

– Slowly drive the truck forwards until the towbar eye and towing jaws are disconnected.

– Close the tow coupling by actuating the closing lever (1).

NOTE

To protect the lower coupling pin bush against contamination, always keep the tow coupling closed.

Coupling model RO*245

NOTE

Trailer coupling RO 245 is intended for a tow-bar eye in accordance with DIN 74054 (bore diameter 40 mm) or DIN 8454 (bore diameter 35 mm).

– Take measures to prevent the trailer from rolling away, e.g. use wheel chocks.

– Adjust the tow bar eye of the tiller so that it is at the centre of the towing jaws.

– Push the hand lever (5) upwards.

– The tow coupling is opened.

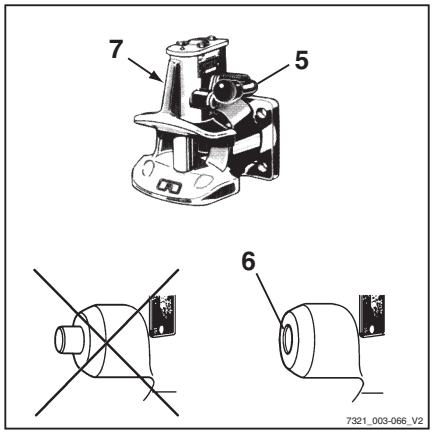

DANGER

People can become trapped between the truck and trailer!

When hooking up, ensure that no one is between the truck and trailer.

– Slowly move the truck back.

DANGER

If the coupling pin drops out during towing, the trailer will work loose and can no longer be controlled. There is a risk of accident!

A protruding safety handle means that the tow bar eye has not been coupled correctly. The trailer must not be towed in this condition.

– Make sure that the control pin does not protrude from the control bush.

– Repeat the coupling process if necessary.

– Remove any items used to prevent the trailer from rolling away.

– Tow the trailer.

Uncoupling model RO*245

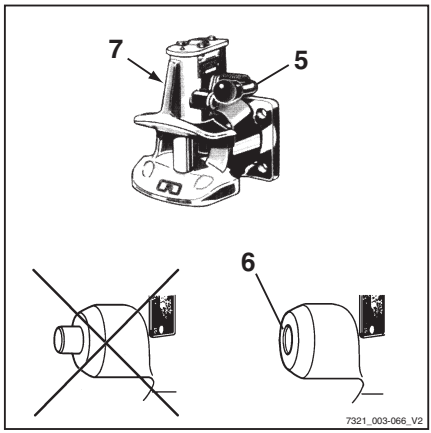

- Take measures to prevent the trailer from rolling away, e.g. use wheel chocks.
- Push the hand lever (5) upwards.
- Slowly drive the truck forwards until the tow-bar eye and towing jaws are disconnected.
- Push the closing lever (7) on the left side of the tow coupling down as far as it will go.

The tow coupling is closed.

Coupling model RO*841

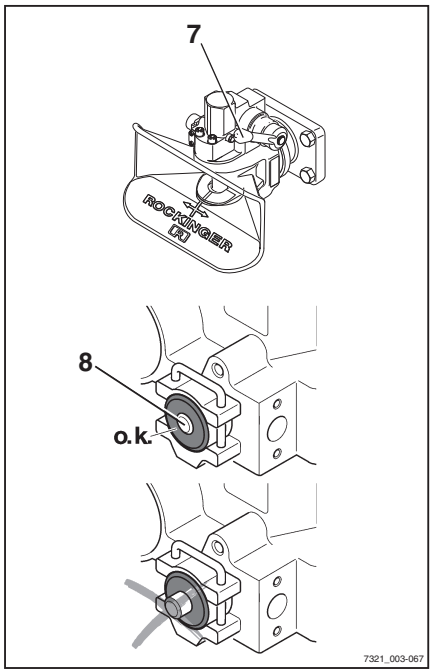

NOTE

Tow coupling RO 841 is intended for a tow-bar eye in accordance with DIN 74054 (bore diameter 40 mm).

- Take measures to prevent the trailer from rolling away, e.g. use wheel chocks.
- Push the hand lever (7) upwards until it snaps into place.

DANGER

People may be trapped between truck and trailer.

When hooking up, ensure that no one is between the truck and trailer.

CAUTION

When being coupled, the tow-bar eye must engage in the middle of the coupling jaw. Failure to follow these instructions could result in damage to the coupling jaw or to the tow-bar eye!

- Ensure that the tow-bar eye enters the coupling jaw centrally.

- Slowly move the truck back.

⚠ DANGER

If the coupling pin drops out during towing, the trailer will work loose and can no longer be controlled. There is a risk of accident!

A protruding safety handle means that the tow bar eye has not been coupled correctly. The trailer must not be towed in this condition.

- Make sure that the control pin does not protrude from the control bush.
- Repeat the coupling process if necessary.

- Remove any items used to prevent the trailer from rolling away.
- Tow the trailer.

Uncoupling model RO*841

- Take measures to prevent the trailer from rolling away, e.g. use wheel chocks.
- Push the hand lever (7) upwards.
- Slowly drive the truck forwards until the tow-bar eye and towing jaws are disconnected.
- Close the tow coupling.

Towing trailers

- Drivers who are towing a trailer for the first time must practise driving with a trailer in a suitable area.
- When passing through narrow road areas (entrances, gates etc.), observe the dimensions of the trailer and load.
- When towing multiple trailers, ensure a sufficient minimum distance to fixed installations when turning and cornering.

The permissible length of the trailer trains depends on the roadways to be driven and may need to be determined during the test drive.

It is the responsibility of the operating company to instruct the drivers regarding the permissible number of trailers and, where required, any additional speed reductions on individual sections of the route.

▷

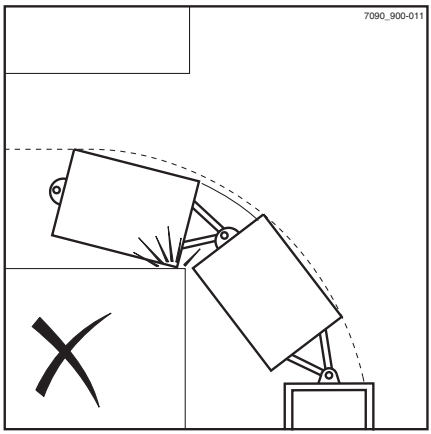

NOTE

Please observe the definition of the following responsible persons: "operating company" and "driver".

Display messages

Messages

Certain truck conditions may cause event-related messages to be shown on the display of the display-operating unit.

There are messages about operation and messages about the truck. If a message about operation appears, the display-operating unit will prompt you to perform an action. A message about the truck means that the truck control unit has detected a fault.

The following types of message may appear individually or in combination:

- A graphic symbol
- The message
- A code consisting of a letter and a four-digit number

The message is displayed until either the cause has been corrected or the message has been acknowledged.

In the case of successive events, the respective messages are displayed one after another on the display.

Messages about operation

If messages about operation appear on the display-operating unit, an action must be carried out.

Shown on display	Cause/action
Log in	The access authorisation (variant) is preventing the use of the truck. - Enable the access authorisation.
Release brake pedal !	The desired action is only possible after releasing the brake pedal. - Release the brake pedal.
Curve Speed Control active !	Curve Speed Control reduces the curve speed. - No action is required.
Data transmission required !	If the truck is equipped with this variant, data transmission must be carried out. - See the associated instructions.
Diagnostic mode active	This message is not displayed during normal operation. - Contact the authorised service centre.
Set revolution speed	If an attachment is fitted and no pump speed has been set for its direction of movement, this message will be displayed. - Set the revolution speed with the access authorisation.
Development mode active	This message is not displayed during normal operation. - Contact the authorised service centre.
Drive unit blocked !	This message follows earlier messages, e.g. overtemperature. It is not possible to drive the truck. - Wait until the message disappears. If necessary, switch the truck off and on again. If the message continues to appear, please contact the authorised service centre.
Sit on driver's seat	The truck is equipped with a seat contact switch. If the driver's seat is not occupied, the drives and the hydraulic functions are disabled. - Sit on the driver's seat.

Shown on display	Cause/action
Secure truck against rolling away ⚠	If the truck control unit detects a movement of the truck without the accelerator pedal being actuated, this message appears. - Apply the parking brake. - If necessary, secure the truck with wedges so that it cannot roll away. The load on the driver's seat is released but the parking brake cannot engage due to a defect. - Secure the truck with wedges so that the truck does not roll away.
Switch off truck? ⓘ	If the truck is switched off without having first applied the parking brake, this message appears. - Apply the parking brake.
Switch off truck anyway? ⓘ	If the truck is to be switched off although the parking brake is not applied, this message appears. - Secure the truck with wedges so that the truck does not roll away.
Truck stop: Access system 🔒	The access authorisation (variant) is preventing the use of the truck. This can be caused by entry of an incorrect code. - Enable the access authorisation.
Apply parking brake ⓘ	If the truck control unit detects a movement of the truck without the accelerator pedal being actuated, this message appears. - Apply the parking brake.
Release parking brake ⓘ	The desired action is only possible after releasing the parking brake. - Release the brake pedal.
Check parking brake ⚠	The truck control unit detects that the braking force of the electric parking brake is reducing. - Secure the truck with wedges so that the truck does not roll away. - Contact your authorised service centre.
Parking brake cannot be applied ⓘ	The parking brake cannot be applied due to a technical fault. - Apply the parking brake according to the section entitled "Malfunctions in the electric parking brake". - Secure the truck with wedges so that the truck does not roll away.
Apply parking brake via button ⓘ	The electric parking brake is not applying automatically. - Apply the parking brake by pressing the button.
Release parking brake via button ⓘ	The electric parking brake cannot be released automatically. - Release the parking brake by pressing the button.

Shown on display	Cause/action
Parking brake: Maintenance required 🔧	The truck control unit detects that the electric parking brake needs a service. - Secure the truck with wedges so that the truck does not roll away. - Contact your authorised service centre.
Lower forks !	This message appears e.g. for precision load measurement (variant). - Lower the fork carriage.
Lift height restriction active !	The lift height restriction (variant) is switched on. - Observe the heights of ceilings and entrances.
Close cab door or seat belt !	If the seat belt is not fastened and the cab door (variant) is not closed, the driving speed is limited to 4 km/h and this message appears. - Close the cab door or fasten the seat belt.
Close cab door !	If the cab door is opened while the truck is in motion, the truck brakes automatically to a speed of 4 km/h. - Close the cab door.
Configuration: Please wait ⟳	This message is not displayed during normal operation. - Contact the authorised service centre.
Unsent data will be overwritten !	If the truck is equipped with this variant, data transmission must be carried out. - See the associated instructions.
Emergency drive direction via drive direction selection lever ⚠	If the truck control unit has detected a fault that affects the drive functions, it is possible to activate emergency running. - Set the direction selection lever to the desired direction. - Drive the truck to a safe area and park it safely. - Contact the authorised service centre.
Emergency drive direction via drive direction switch ⚠	If the truck control unit has detected a fault that affects the drive functions, it is possible to activate emergency running. - Set the drive direction switch to the desired direction. - Drive the truck to a safe area and park it safely. - Contact the authorised service centre.
Parameter calibration ⟳	This message is not displayed during normal operation. - Contact the authorised service centre.
Seatbelt sequence !	If the configured sequence for applying the restraint systems is not observed, this message appears. - Fasten the seat belt.

Shown on display	Cause/action
Close restraint system	If, for example, the truck is equipped with a bracket as a restraint system and the accelerator pedal is actuated, this message appears. The truck will not move. - Close the restraint system.
Shaking blocked – overload ⚠	If the shaking function (variant) is overloaded by an excessive load, this message appears. The shake function will remain unavailable as long as this situation persists.
Switch on switch lock !	If the hazard warning system (variant) is switched on when the truck is switched off, the display-operating unit remains active. Then, when a truck function is called up, this message appears. - Switch on the truck.
Shock event detected !	If the truck control unit detects a very strong acceleration or deceleration, e.g. in the event of an accident, this message appears.
Service required	If the maintenance interval has been reached, this message appears. - Contact the authorised service centre.
Service mode active ⚠	This message is not displayed during normal operation. - Contact the authorised service centre.
Close seat belt	If the seat belt is not fastened, the driving speed is limited to 4 km/h and this message appears. - Fasten the seat belt.
Are you sure? ?	If the display-operating unit is expecting confirmation from the driver, this message appears. - Continue with or cancel the input prompt.
Sprint mode blocked – temperature	If the temperature at the drive units is too high, this message appears. Sprint mode is no longer available. - Observe the previous message.
Foot switch ⚠	If the truck is equipped with a foot switch, and a truck function is called up when the foot switch is not actuated, this message appears. - Actuate the foot switch.
Overload	With the "overload protection" variant, this message appears if an excessive load is picked up. - Set down the load.
Factory mode active ⚠	This message is not displayed during normal operation. - Contact the authorised service centre.
Access expired !	If the truck is equipped with this variant, this message might appear. - See the associated instructions.
Access denied !	

Shown on display	Cause/action
Access expires in < 1 month !	
Access expires in < 1 day !	
Access expires in < 1 week !	
Access expires in < 2 days !	
Access expires in < 3 days !	

Messages about the truck

If messages with a code appear on the display-operating unit, the truck control unit has detected a fault. The message with a code is stored in the message list until the cause of the message is corrected. The saved messages can be called up from the "message list".

If, for example, the reflector or the lift-height sensor is contaminated, it usually helps to clean these components.

– Switch the truck off and on again.

– If the message still appears, please contact the authorised service centre.

The messages are sorted in ascending order according to their code:

Code	Shown on display	Description/possible solution
A2103	Parameter faulty	Collective fault of the parameters
A2305	Fault: Control unit	Collective fault on the control unit
A2545	Actuator error 9:	Actuator breakdown If no attachment is fitted, this message can be ignored. - If there is an attachment fitted, contact the authorised service centre.
A2801	Monitoring	Process monitoring, proc 1
A2802	Monitoring	Process monitoring, proc 2
A2803	Monitoring	Process monitoring, proc 3
A2804	Monitoring	Process monitoring, proc 4
A2805	Monitoring	Process monitoring, proc 5
A2806	Monitoring	Process monitoring, proc 6
A2807	Monitoring	Process monitoring, proc 7
A2808	Monitoring	Process monitoring, proc 8
A2809	Monitoring	Process monitoring, proc 9
A2810	Monitoring	Process monitoring, proc 10
A2811	Monitoring	Process monitoring, proc 11
A2899	Monitoring	Collective fault of the process monitoring
A3015	Fault: Brake sensor	Collective fault on the brake sensor
A3027	Fault: Seat switch	The seat switch does not open - Stand up from the driver's seat and sit down again.
A3035	Fault: Brake fluid	Brake fluid switch
A3143	Check lift height sensor and reflector	Lift-height sensor measurement error

Code	Shown on display	Description/possible solution
A3151	Plausibility of shift function hydraulics ⚠	If no attachment is fitted, this message can be ignored. - If there is an attachment fitted, contact the authorised service centre.
A3230	Fault: Monitoring of steering ⚠	Collective fault on the steering
A3340	Monitoring: Electrics ⚠	Collective fault on the additional electrical installation
A3345	Monitoring: Electrics ⚠	Collective fault on the powertrain
A3346	Monitoring: Drive unit ⚠	Collective fault on the drivetrain
A3347	Hydraulics	If no attachment is fitted, this message can be ignored. - If there is an attachment fitted, contact the authorised service centre.
A5090	Overtemp.: Drive unit 🌡	Drive unit overtemperature collective fault - Switch off the truck and leave it to cool down.
A5091	Overtemp.: Hydraulic drive 🌡	Hydraulic drive overtemperature collective fault - Switch off the truck and leave it to cool down.
A5632	Check the engine oil level	Engine oil level too high/too low The driving speed is reduced. - Check the engine oil level and if necessary drain or refill the engine oil.
A5986	Fault: Control unit ⚠	General battery current measurement
A6502	Overtemp.: Parking brake	Electric parking brake detects overtemperature
A6510	Fault: Parking brake	Electric parking brake detects fatal fault
A6511	Fault: Parking brake	Brake cannot release
A6512	Fault: Parking brake	Brake cannot apply
A6701	Fault: Monitoring of assistance system ⚠	Collective fault on the assistance systems
None	Error ⚠	General fault

Refuelling

Changing the LPG cylinder

⚠ DANGER

There is a risk of explosion if LPG escapes!

LPG cylinders with an expired inspection date must not be used.

The inspection intervals stipulated in the pressure vessel code must be observed under all circumstances. The most recent inspection date marked on the LPG cylinder is the date that applies. Observe the national regulations in the relevant country!

– Stop the engine.
– Do not smoke or use a naked flame/ lighter.
– Ensure that permissible LPG cylinders are used.
– Only change LPG cylinders in well-ventilated spaces, away from openings in the ground.
– Observe the safety regulations for working with LPG.

⚠ DANGER

Risk of explosion from discharge spark!

Striking tools must not be used to aid opening and closing.

⚠ DANGER

Naked flames, red-hot objects etc. can cause explosions.

Frozen system parts must be thawed out using only hot water, hot sandbags or similar.

Observe the following safety regulations in all cases:

- Observe the safety guidelines for LPG trucks
- Cylinders must only be changed by trained personnel
- Before releasing the pipe or hose connections, the cylinder valves and main shut-off valves must be closed
- The connecting nuts on the cylinders must only be released slowly and, at first, only

very slightly; otherwise, the gas remaining in the line will spurt out

- The lines and related equipment for gas in the liquid phase and LPG containers must not be exposed to an impermissible impact of heat
- Removable LPG containers (LPG cylinders) must be positioned on the truck such that they are lying with the collar opening facing downwards
- Upon installation and removal, the gas outlet connection of the cylinder valve must be sealed with a lock nut that has been securely tightened using a wrench
- Before the LPG cylinders are connected, the pipe connections must be checked to ensure that they are in good condition
- After removal, the cylinder cap must immediately be screwed onto the cylinders fitted with a lock nut
- The valves must be opened slowly
- Leaking gas cylinders must not be reused. Taking all precautions into account, leaking gas cylinders must immediately be discharged outside and marked as leaking
- If damaged gas cylinders are supplied, the provider or a representative (service-station attendant etc.) must be immediately notified of the damage present, where possible in writing
- Even if no accident occurs as a result, explosions involving gas cylinders or LPG systems must be immediately reported to the employers' liability insurance association and the responsible industrial inspectorate (applies to Germany). Damaged parts must be stored carefully until the conclusion of the investigation. Observe the national regulations in the relevant country
- Removable LPG containers may only be changed in storage rooms if there is no possibility of a hazardous explosive atmosphere being produced

⚠ WARNING

LPG can cause injuries to the eyes and frostbite to the skin!

– Wear protection goggles and protective gloves.

- Switch off the engine and, where applicable, the heating system with combustion heater.
- Put on protection goggles and protective gloves.
- Close the cylinder valve (1).
- Securely grip the connection nipple using the handhold (3) and carefully loosen the union nut (2) (left-hand thread).

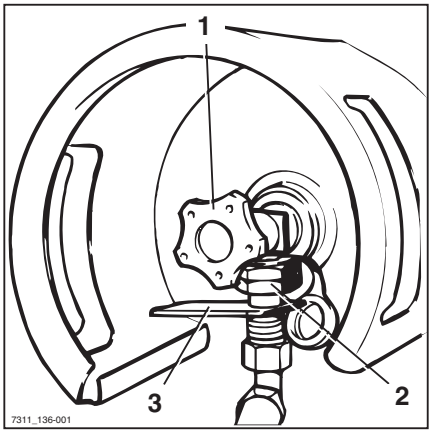

- Swivel the handle of the tensioning device (4) upwards and remove the hook (6) from the support mounting.
- Remove the upper part of the cylinder holder (5).
- Replace the empty gas cylinder with a full one.
- When installing the gas cylinder, make sure that the connection screw joint of the cylinder shut-off valve points vertically downwards.
- Secure the gas cylinder properly in the cylinder holder.
- Open the cylinder valve (1) by slowly turning the star-grip handle anti-clockwise.
- Check whether the hose or the connection screw joints have iced over.

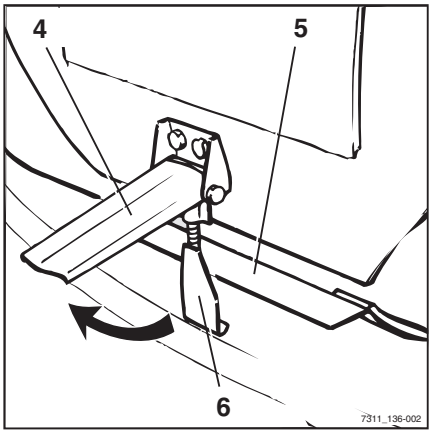

⚠ DANGER

There is a risk of explosion if LPG escapes!

Do not start the engine if there is a leakage, gas smell etc.

- Close the cylinder valve again.
- Notify your supervisor or the authorised service centre.

Changing the LPG cylinder in a double-cylinder holder

⚠ DANGER

There is a risk of explosion if LPG escapes!

Escaping LPG may explode when exposed to ignition sources and cause serious accidents.

- Do not use LPG cylinders with an expired inspection date.
- Observe the inspection intervals stipulated in the pressure vessel code. The most recent inspection date marked on the LPG cylinder is the date that applies. Observe the national regulations in the relevant country!
- Stop the engine.
- Do not smoke or use a naked flame/ lighter.
- Ensure that permissible LPG cylinders are used.
- Only change LPG cylinders in well-ventilated spaces, away from openings in the ground.
- Thaw frozen system parts with hot water, hot sandbags or similar.

⚠ DANGER

Risk of explosion when using double LPG cylinders.

Replacement cylinders made from aluminium or composite materials may only be used when fitted with an additional safety valve.

- Where applicable, use replacement cylinders that are made of steel and comply with the specifications of EN 1442.

⚠ DANGER

Risk of explosion from discharge spark!

– Do not use a striking tool when opening and closing.

⚠ WARNING

LPG can cause injuries to the eyes and frostbite to the skin!

– Wear protection goggles and protective gloves.

Two versions of the double-cylinder holder are available. The LPG cylinders are either arranged next to each other or one on top of the other.

The procedure for changing the LPG cylinders is the same for both versions of the double-cylinder holder. The procedure is also the same for both LPG cylinders.

– Switch off the engine and, where applicable, the heating system with combustion heater.

– Put on protection goggles and protective gloves.

– Firmly close the cylinder valve (1) on both LPG cylinders. ▷

– Securely grip the connection nipple using the handhold (3) and carefully loosen the union nut (2) (left-hand thread).

– Swivel the handle of the tensioning device (4) upwards and remove the hook (5) from the support mounting.

– Remove the upper part of the cylinder holder (6).

– Remove the empty LPG cylinder and screw on the cylinder cap (7).

– Install the full LPG cylinder.

– When installing the LPG cylinder, make sure that the connection screw joint of the cylinder shut-off valve points vertically downwards.

– Insert the upper part of the cylinder holder.

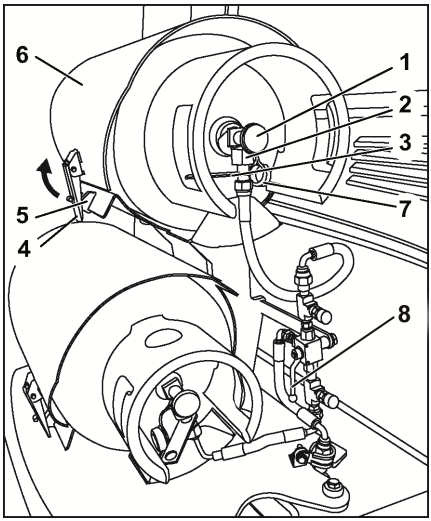

- Fit the hook to the support mounting and swivel the handle of the tensioning device downwards.
- Securely grip the connection nipple using the handhold and screw on the union nut.
- Open the cylinder valve by slowly turning the star-grip handle anti-clockwise.
- Check to see whether the hose and connection screw joints have iced over.
- Check that the required LPG cylinder has been selected for use with the cylinder selector valve (8). See the following section for information.

Selecting the LPG cylinder for use

The double-cylinder holder has a cylinder selector valve that selects one of the two LPG cylinders for use.

- Position the adjustment lever (1) of the cylinder selector valve so that it points away from the cylinder selected for use (2).

LPG cylinders arranged side by side: ▷

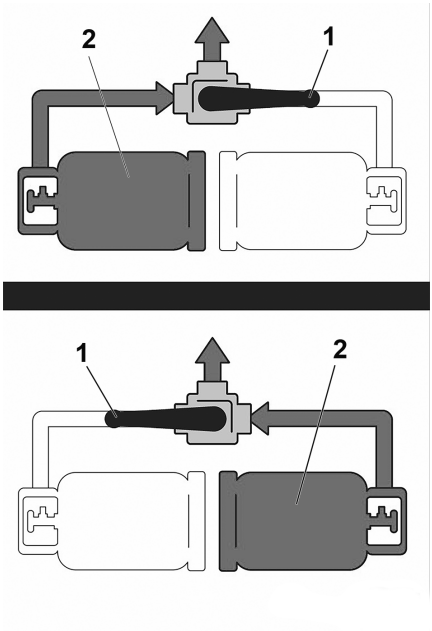

LPG cylinders arranged one on top of the other: ▷

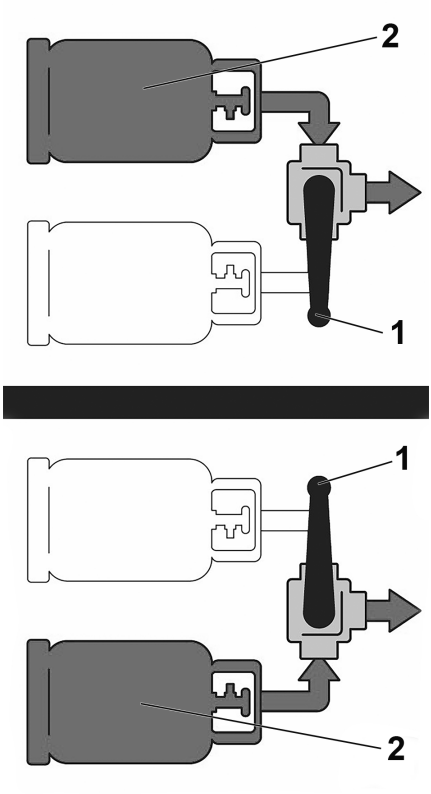

Filling the LPG tank (variant)

Safety information

⚠ DANGER

Risk of fire and explosion!

- Check the LPG tanks regularly. Observe the national regulations in the relevant country.
- Before connecting the pistol-type nozzle, check the LPG tank and fittings for defects.

If defects are found:

- Do not fill the LPG tank.
- Do not continue to operate the truck.
- Park the truck securely.
- Notify the authorised service centre.

⚠ DANGER

There is a risk of explosion if LPG escapes!

If LPG escapes when filling the LPG tank, exposure to ignition sources can cause the LPG to explode.

– Stop the engine.

– Do not smoke or use a naked flame/ lighter.

– Observe the safety regulations for working with LPG.

– Observe the safety information for the filling station.

⚠ DANGER

Risk of explosion from discharge spark!

Striking tools can generate sparks.

– Open or close the shut-off valve or the locking cap without using striking tools.

⚠ DANGER

Risk of explosion during thawing of gas system!

Gas can ignite and explode when exposed to excessive heat, naked flames, glowing objects and objects that produce sparks. Frozen system components must only be thawed using warm air, warm water, warm sand bags or similar. The temperature of the applied heat must not exceed 50°C. Do not apply warm air directly using a heating appliance, e.g. a hot air blower. The gas can ignite when it comes into contact with the heating coil in devices of this kind. It is acceptable to deliver the warm air via a warm-air hose.

– Thaw frozen system parts with a temperature < 50°C.

– Set up heating appliances at a sufficiently safe distance from the truck.

Observe the following safety regulations in all cases:

- Observe the safety guidelines for LPG trucks
- Only allow trained personnel to fill the LPG tank
- Only fill the LPG tank at filling stations in which compressed gases in pressurised gas containers are filled exclusively for your own use ("filling stations that do not require prior authorisation")
- Before connecting the pistol-type nozzle, check whether the LPG tank (1) or the fitting (2) exhibit any defects
- Adhere to the inspection intervals in the pressure vessel code. The most recent inspection date marked on the container is the date that applies. Do not use containers with an expired inspection date
- If deficiencies are detected or if the inspection interval has been exceeded, do not fill the LPG tank
- The piping and related equipment for gas in the liquid phase and LPG containers must not be exposed to an impermissible level of heat
- Explosions involving a gas cylinder or an LPG system must always be reported immediately (in Germany, to the employers' liability insurance association and the responsible industrial inspectorate). Store damaged components until the investigation has been completed
- Replace removable LPG containers in storage rooms only when there is no risk of an explosive atmosphere being produced
- Observe the national regulations for the country in which the truck is being used

▷

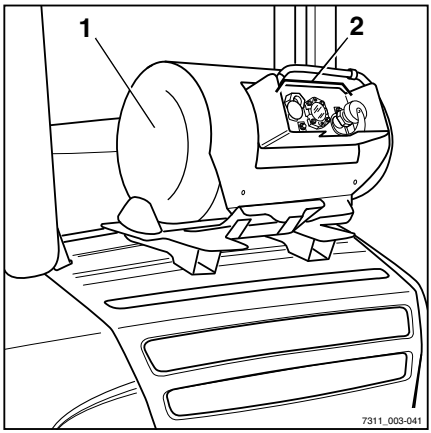

Components of the LPG tank

- **Filling stop valve**: ensures that the gas tank is filled to the maximum limit
- **Filling level sensor**: monitors the filling level in the gas tank
- **Shut-off valve**: opens and closes the LPG line to the engine
- **Safety valve**: limits the pressure rise in the gas tank. In the event of an over-pressure scenario, gas is discharged into the atmosphere

Filling the LPG tank

NOTE

We recommend refuelling the truck before starting work and when the engine is cold. If there is a major difference in temperature between the storage tank out in the open and the LPG tank on the truck, the delivery pressure of the pump may no longer be sufficient to ensure that filling occurs properly.

WARNING

LPG can cause injuries to the eye and frostbite to the skin!

– Wear protection goggles and protective gloves.

– Switch off the engine and heating system.

– Close the shut-off valve (3).

– Unscrew and remove the locking cap (5) from the filling valve.

– Check that the connection thread of the pistol-type nozzle is clean.

– Screw the pistol-type nozzle to the filling valve securely.

– Open the main shut-off valve for the filling station.

– Switch on the pump motor and actuate the pistol-type nozzle until the tank valve switches off the filling process.

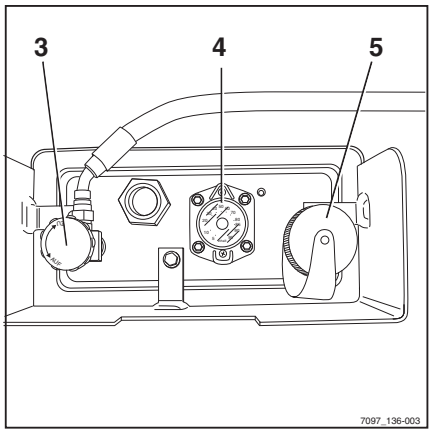

CAUTION

It is possible to underfill or overfill the LPG tank!

– Only fill the LPG tank until the tank valve switches itself off.

– Do not fill according to the level display (4). ▷

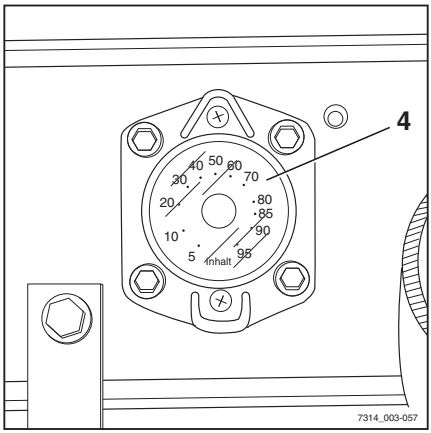

– Release the actuating lever for the pistol-type nozzle immediately after the tank valve has switched off and stop the filling process.
– Switch off the pump motor and close the main shut-off valve of the filling station.
– Carefully unscrew the pistol-type nozzle from the filling valve.
– Screw the locking cap (5) back onto the filling valve.

⚠ DANGER

Risk of explosion in the event of irregularities!

If irregularities or noteworthy incidents occur during the filling process that are not covered in these operating instructions, there is a risk of serious accidents in certain circumstances.

– Take the following courses of action immediately.

Courses of action in the event of irregularities:

– Stop the filling process immediately.
– If possible, remove the pistol-type nozzle and screw on the locking cap.
– In the event of faults in the gas system, do not operate the truck until the fault is resolved.
– Contact your supervisor, the fleet manager or the authorised service centre.

Cleaning

Clean the truck

⚠ WARNING

Risk of injury from falling off the truck!

When climbing onto the truck, there is a risk of getting stuck or slipping and falling. Use suitable equipment to reach higher points on the truck.

– Use only the steps provided for this purpose to climb onto the truck.

– Use equipment such as stepladders or platforms to reach inaccessible areas.

⚠ WARNING

Risk of fire due to flammable cleaning materials!

Flammable cleaning materials can be ignited by hot components.

– Do not use any flammable cleaning materials.

⚠ CAUTION

Risk of fire due to flammable materials!

Deposits and solids can be ignited by hot components, e.g. drive units.

– Remove deposits and solids.

⚠ CAUTION

If water penetrates the electrical system, there is a risk of a short circuit occurring!

The engine must be switched off during washing.

Do not use water to clean the area around the central electrical system; instead, only clean with a dry cloth or clean compressed air.

– Strictly adhere to the following steps.

⚠ CAUTION

Excessive water pressure or water and steam that are too hot can damage truck components.

– Strictly adhere to the following steps.

⚠ CAUTION

Aggressive cleaning materials can damage the surfaces of components!

Using aggressive cleaning materials that are unsuitable for plastics can cause plastic parts to dissolve or become brittle. The screen on the display-operating unit could become cloudy.

– Strictly adhere to the following steps.

– Park the truck securely.
– Switch off the key switch.
– Do not spray electric motors and other electrical components or their covers directly with water.
– Use only high-pressure cleaners with a maximum output power of up to 60 bar and 85°C.
– If a high-pressure cleaner is used, maintain a distance of at least 1 m between the nozzle and the object being cleaned.
– Do not aim the cleaning jet directly at adhesive labels or decal information.
– Remove all deposits and accumulations of foreign materials in the vicinity of hot components.
– Use only non-flammable fluids for cleaning.
– Observe the manufacturer's guidelines for working with cleaning materials.
– Clean plastics only with cleaning materials intended for plastics.
– Observe the manufacturer's guidelines for working with cleaning materials.
– Clean the truck exterior using water-soluble cleaning materials and water. Cleaning with a water jet, a sponge or a cloth is recommended.
– Clean all accessible areas.
– Before lubrication, clean the oil filling openings and the area around the oil filling openings, as well as the lubricating nipples.

Cleaning the electrical system

⚠ CAUTION

Cleaning electrical system parts with water can damage the electrical system.

- Cleaning electrical system parts with water is forbidden!
- Use dry cleaning materials in accordance with the manufacturer's specifications.
- Do not remove covers etc.

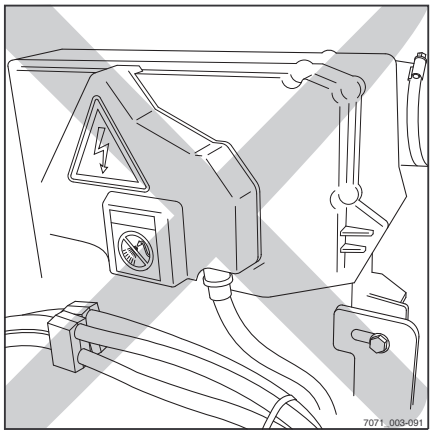

⚠ CAUTION

Possible component damage due to compressed air.

- If components are cleaned with compressed air, the air must have a maximum pressure of 0.15 bar.

This prevents liquids or small solids from being forced through slots or openings inside components and causing damage.

- Clean the electrical system parts with a metal-free brush and blow the dust off with low-pressure compressed air.

Cleaning load chains

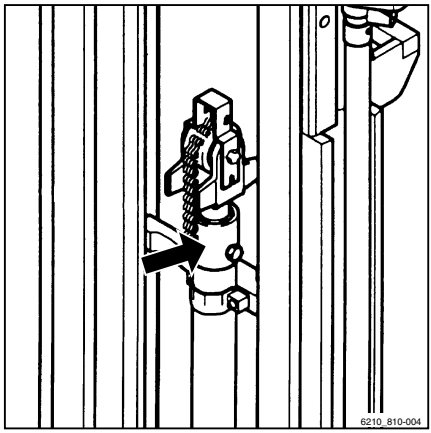

⚠ WARNING

Risk of accident!

Load chains are safety elements.

The use of cold/chemical cleaners or fluids that are corrosive or contain acid or chlorine can damage the chains and is forbidden!

- Observe the manufacturer's guidelines for working with cleaning materials.

- Place a collection vessel under the lift mast.
- Clean with paraffin derivatives, such as benzine.
- When using a steam jet, do not use additional cleaning agents.
- Remove any water in the chain links using compressed air immediately after cleaning. Move the chain several times during this procedure.

– Immediately after drying the chain, spray it with chain spray. Move the chain several times during this procedure.

For chain spray specifications, see the "Maintenance data table" chapter.

ENVIRONMENT NOTE

Dispose of any fluid that has been spilled or collected in the collection vessel in an environmentally friendly manner. Follow the statutory regulations.

Cleaning the windows

Any panes of glass, e.g. cab windows (variant), must always be kept clean and free of ice. This is the only means of guaranteeing good visibility.

CAUTION

Do not damage the rear window heater (inside)!

– Take great care when cleaning the rear window and do not use any objects with sharp edges.

– Clean the windows using a commercially available glass cleaner.

After washing

– Carefully dry the truck (e.g. with compressed air).

– Sit on the driver's seat and start up the truck in accordance with regulations.

CAUTION

Risk of short circuit!

– If any moisture has penetrated into the engine despite the precautionary measures taken, this must first be dried with compressed air.

– The truck must then be started up to prevent possible corrosion damage.

Procedure in emergencies

Procedure if truck tips over

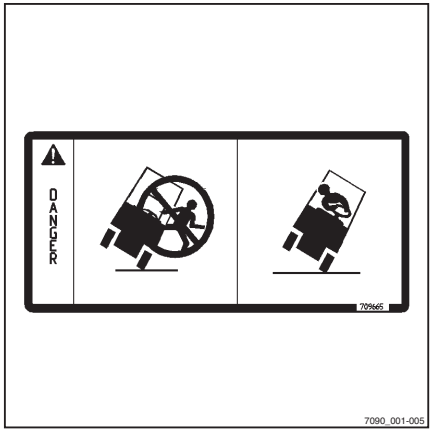

⚠ DANGER

If the truck tips over, the driver could fall out and slide under the truck with potentially fatal consequences. There is a risk to life.

Failure to comply with the limits specified in these operating instructions, e.g. driving on unacceptably steep gradients or failing to adjust speed when cornering, can cause the truck to tip over. If the truck starts to tip over, do not leave the truck under any circumstances. This increases the danger of being hit by the truck.

- Do not release your seat belt.
- Never jump off the truck.
- You must adhere to the rules of behaviour if the truck tips over.

Rules of behaviour if truck tips over:

- Hold onto the steering wheel with your hands.
- Brace your feet in the footwell.
- Bend your upper body over the steering wheel.
- Bend your body against the direction of the fall.

Emergency hammer

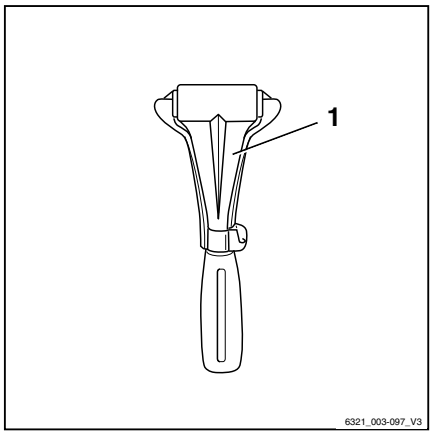

The emergency hammer is used to rescue the driver if he is shut inside the cab in a hazardous situation, for example if the truck has toppled over and the cab door cannot be opened.

Single-pane safety glass can be struck relatively safely using the emergency hammer in order for the driver to escape or be rescued from the danger area.

Using the emergency hammer

⚠ WARNING

When glass is smashed there is a risk of injury caused by glass splinters!

When the cab glass is smashed, splinters of glass can shoot into the face and cause damage to skin and eyes through cuts. When a pane of glass is smashed, the face should be turned away and covered with the crook of the free arm.

– Protect the face when smashing a pane of glass.

– Pull the emergency hammer out of its support mounting at the handle.

– Using one of the two metal tips on the head of the emergency hammer, hit the pane of glass with force until it breaks.

Emergency lowering

If the hydraulic controller fails whilst a load is raised, emergency lowering can be performed. An emergency lowering screw designed for this purpose is located on the valve block.

⚠ DANGER

There is a risk to life from falling loads or from truck components being lowered.

– Do not walk beneath the raised load.

– Adhere to the steps detailed below.

– Remove the lid (1) on the right-hand side of the footwell panelling near the accelerator pedal. ▷

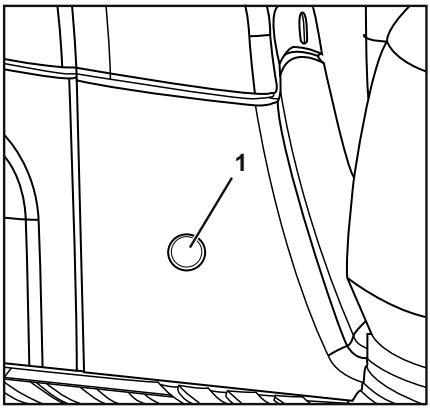

– Remove the hexagon socket wrench (2) from the compartment on the right next to the driver's seat. ▷

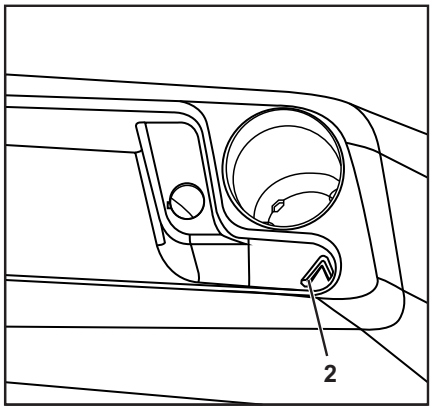

– Using the hexagon socket wrench, turn the emergency lowering screw (3) a maximum of 1.5 revolutions to loosen it. ▷

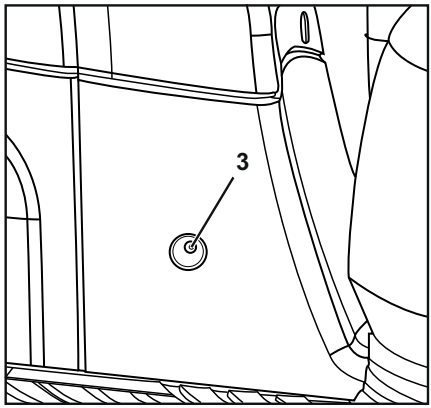

⚠ WARNING

The load is lowered!

Unscrewing the emergency lowering screw regulates the lowering speed.

– Observe the list of points below.

The following applies:

- Tightening torque:
  Max. 2.5 Nm
- Unscrewing the emergency lowering screw slightly:
  The load is lowered slowly
- Unscrewing the emergency lowering screw further:
  The load is lowered quickly

After lowering:

– Re-tighten the emergency lowering screw.

– Return the hexagon socket wrench to the support mounting in the compartment.

– Refit the lid.

⚠ DANGER

If the truck is operated while the hydraulic controller is blocked, there is an increased risk of accidents.

– After the emergency lowering procedure, have the malfunction rectified.

– Notify the authorised service centre.

Emergency operation of the electric parking brake

⚠ DANGER

Risk of fatal injury from being run over if the truck rolls away!

Emergency operation of the parking brake can be initiated only when the fork is lowered and the truck is switched off.

The truck can roll away when the parking brake is released.

– Use wedges to prevent the truck from rolling away.

– Lower the fork to the ground.

– Switch off the key switch.

The electric parking brake can be released and applied via an emergency actuation mechanism.

The emergency operation of the electric parking brake is required under the following conditions:

- The parking brake is not functioning properly.
- No power supply to the parking brake, e.g. if the starter battery is discharged or removed

NOTE

If the parking brake is released via the emergency actuation mechanism, it is possible to drive the truck at a low speed.

- *This allows the truck to be moved out of the hazardous situation or to the repair location.*
- *Driving with a faulty parking brake requires the driver to be especially vigilant.*

– Lift the cover (1) and fold it up. ▷

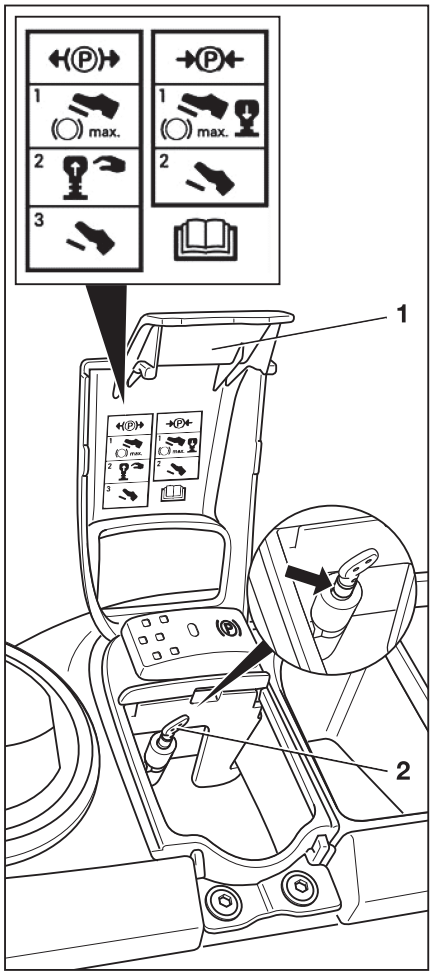

Release parking brake ←Ⓟ→

⚠ CAUTION

Risk of component damage by pulling on the emergency actuation mechanism with excessive force!

– Apply a maximum force of 50 N to the emergency actuation mechanism.
– If the emergency actuation mechanism does not move, depress the brake pedal.

– To release the mechanism, fully depress the brake pedal and hold it down.
– Remove and hold on to the emergency actuation mechanism (2).
– Release the brake pedal. Let go of the emergency actuation mechanism (2).

Once two grooves are visible (see arrow), the parking brake is released.

Apply parking brake →Ⓟ←

– Fully depress the brake pedal.

The emergency actuation mechanism (2) returns to its initial position.

– Release the brake pedal.

Once only one groove is visible (see arrow), the parking brake is applied.

– If the status of the parking brake cannot be reliably determined from the position of the emergency actuation mechanism, secure the truck with wedges.

Disconnecting the battery

In order to quickly disconnect the battery in the event of a dangerous situation (e.g. a burning cable or electrical malfunction), the negative battery terminal is fitted with a quickly removable battery-terminal clip.

Proceed as follows to quickly disconnect the battery:

– Unscrew star-grip screws (1) to the left and right of the rear cover and fold the cover (2) back.

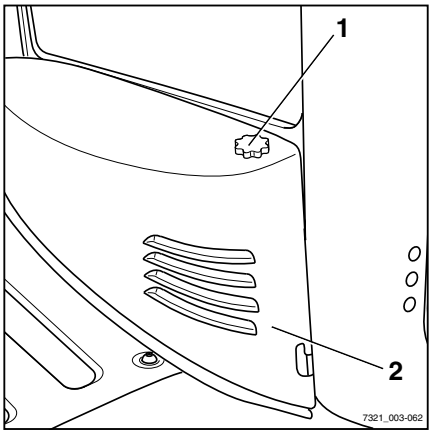

– Pull the negative terminal battery-terminal clip upward.

– Lift the battery-terminal clip off the negative terminal of the battery and place it to the side.

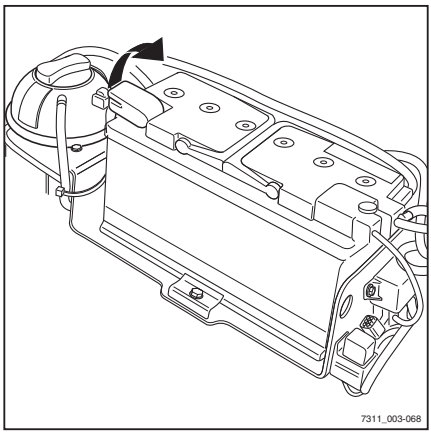

Jump-starting

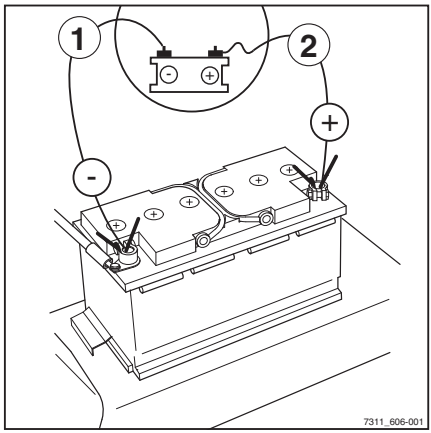

DANGER

Risk of explosion from spark discharge!

If the electrical system on the truck is switched on, or a live cable touches a metal part of the truck, this can cause a spark discharge. Any escaping gas may explode as a result.

- If the truck has not been used for a long period of time and before starting work, ensure that the closed room is well ventilated before operating the truck.
- The metal parts of the truck must not touch the connecting terminals.

NOTE

A 12-V power source (e.g. second forklift truck of the same type) must be available.

WARNING

Risk of short circuit if the jump leads are connected or disconnected in the incorrect order!

If the battery's negative terminals are connected to the negative cable, both bodies are also conductively connected to one another. If the positive cable touches one of the two bodies as further cables are connected, a short circuit can occur.

- Ensure that the correct order is followed when connecting and disconnecting the jump leads.

- Remove covering from the back, see ⇒Chapter "Removing and attaching the rear cover", Page 427 .
- Leave the engine of the current-giving truck to run.

Connect the jump leads:

- Connect the positive cable (2) to the positive terminal on the discharged battery.
- Connect the positive cable to the positive terminal on the current-giving battery.
- Connect the negative cable (1) to the negative terminal on the current-giving battery.
- Connect the negative cable to negative terminal on the discharged battery.

⚠ CAUTION

The vibrations produced when the engine is started can cause the jump leads to slip off. There is a risk of short circuit!

– Before starting the engine, check that the jump leads are connected securely.

– Start the engine, see ⇒ Chapter "Starting the engine", Page 138 .

Disconnect the jump leads:

– Disconnect the negative cable (1) from the negative terminal on the discharged battery.

– Disconnect the negative cable from the negative terminal on the current-giving battery.

– Disconnect the positive cable (2) from the positive terminal on the discharged battery.

– Disconnect the positive cable from the positive terminal on the current-giving battery.

NOTE

Leave the engine to run because the battery is not yet sufficiently charged.

– Replace the covering at the back.

Towing

▷

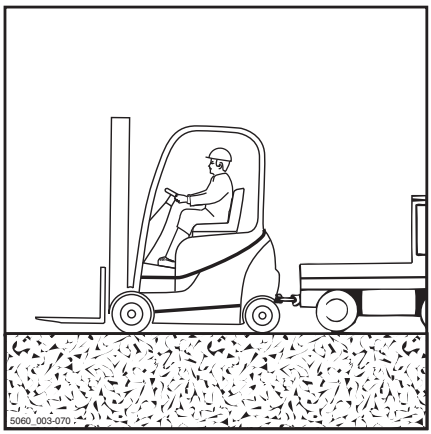

⚠ DANGER

Risk of accident due to failure of the brake system of the towing vehicle!

If the brake system of the towing vehicle is not adequately sized, the vehicle may not brake safely or the brakes may fail. The towing vehicle must be designed such that it is able to absorb the pulling and braking forces from the unbraked towed load (the actual total weight of the truck).

– Check the pulling and braking forces of the towing vehicle.

⚠ DANGER

If the towing vehicle brakes, there is a risk that the truck will drive into the towing vehicle!

If a rigid connection has not been used for power transmission in two directions during towing, the truck may drive into the towing vehicle when the towing vehicle brakes. Use a tested tow bar for safety reasons.

– Use a tested tow bar.

⚠ CAUTION

If the truck drive between the drive motor and the drive axle is not interrupted, the drive may be damaged.

– Place the drive direction switch in the neutral position.

⚠ DANGER

While manoeuvring, there is a risk of fatal injury in the area between the truck and the towing vehicle!

Inform the driver of the towing vehicle and the mechanic attaching the tow bar about the risks. When you fit the tow bar, always use a second person to guide the towing vehicle manoeuvres.

– Manoeuvre with a second person as a guide.

⚠ CAUTION

Steering is stiff! There is no power steering if the hydraulics fail!

– Select a slow towing speed to ensure that the truck and the towing vehicle can be braked and controlled effectively at all times.

⚠ CAUTION

If the truck is not steered while it is being towed, the truck may veer out in an uncontrolled manner!

– The truck being towed must also be steered by a driver.

– The driver of the truck being towed must sit in the driver's seat and fasten the seat belt before towing.

– Where possible, activate the restraint systems provided.

– Set down the load and lower the fork arms so that they are close to the ground.

– Set the drive direction switch to the neutral position.

- Apply the parking brake.
- Switch off the key switch.
- Check the pulling and braking forces of the towing vehicle.
- With a second person as a guide, manoeuvre the towing vehicle to the truck.
- Secure the tow bar to the tow coupling on the towing vehicle and on the truck.
- Sit in the driver's seat of the truck being towed and fasten the seat belt.
- Where possible, activate the restraint systems provided.
- Release the parking brake.
- Select a slow towing speed.
- Tow the truck.
- After towing, secure the truck so that it cannot roll away (e.g. by applying the parking brake or by using wedges).
- Remove the tow bar.

Emergency driving via the drive direction switch/drive direction selection lever

If the truck is equipped with two independent operating devices for the drive direction and one of these operating devices fails, the truck can be emergency driven to leave a hazardous area using the operating device.

As the truck can only be moved to a limited extent, this poses a risk of accident.

These are the possible controls for the drive direction:

- The drive direction switch on the operating device for the hydraulic functions
- The drive direction selection lever on the travel direction selector and indicator module (variant)

This emergency operation is possible in the following situations:

- The drive direction switch on the operating device for the hydraulic functions has failed.

The message `Emerg. direct. via drive direction lever` ⚠ appears.

- The drive direction selection lever on the travel direction selector and indicator module (variant) has failed.

  The message `Emerg. direct. via drive direction switch` ⚠ appears.

- The temperature of the display-operating unit is too low.

  This status is shown in the display as follows:

  STILL ❄

- The display-operating unit has failed.

To perform emergency driving, proceed as follows:

– Sit on the driver's seat.

– Fasten the seat belt.

– Release the parking brake.

– Push the drive direction switch/drive direction selection lever in the desired drive direction.

– Press the accelerator pedal.

– Drive the truck to a safe area and park the truck safely.

– If the error occurs frequently, contact the authorised service centre.

Transporting the truck

Transporting

⚠ CAUTION

Risk of material damage from overloading!

If the truck is driven onto a means of transport, the load capacity of the means of transport, the ramps and the loading bridges must be greater than the actual total weight of the truck. Components can be permanently deformed or damaged due to overloading.

– Determine the total actual weight of the truck.
– Only load the truck if the load capacity of the means of transport, the ramps and the loading bridges is greater than the actual total weight of the truck.

Determining the total actual weight

▷

– Park the truck safely.
– Determine the unit weights by reading the truck nameplate and, if necessary, the attachment nameplate (variant).
– Add together the determined unit weights to obtain the total actual weight of the truck:

Net weight (1)
\+ Ballast weight (variant) (2)
\+ Net weight of attachment (variant)
\+ 100 kg allowance for driver
= Total actual weight

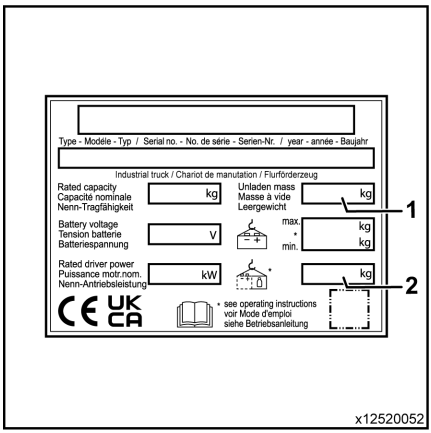

⚠ DANGER

Risk of accident from the truck crashing!

Steering movements can cause the rear of the truck to veer off the loading bridge towards the edge. This may cause the truck to crash.

- Before driving across a loading bridge, ensure that the loading bridge is properly attached and secured.
- Ensure that the transport vehicle onto which the truck is to be driven has been sufficiently secured against moving.
- Maintain a safety distance from edges, loading bridges, ramps, working platforms etc.
- Drive slowly and carefully onto the transport vehicle.

Wedging the wheels

- Use two wedges to secure each of the front and rear wheels against sliding or rolling away.

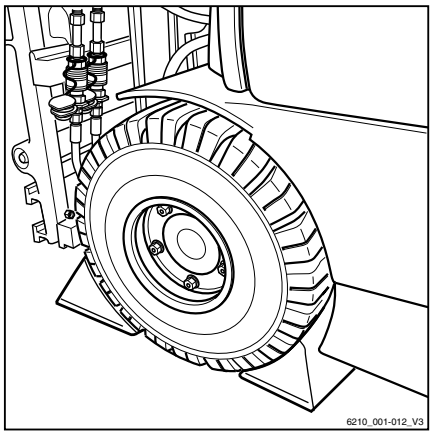

Lashing down

⚠ CAUTION

Harnesses can rub against the seating and cause damage!

- Place a slip-resistant material between the harness and the seating, e.g. rubber mats or foam.

– Attach the harness (1) to each side of the truck. ▷
– Lash the truck towards the rear.

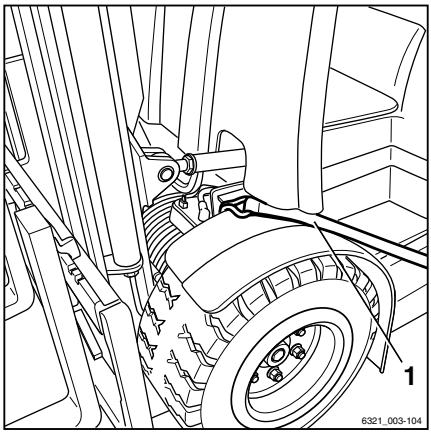

– Attach the harness (1) to the coupling pin (2) or loop the harness around the coupling pin. ▷
– Lash the truck at both sides.

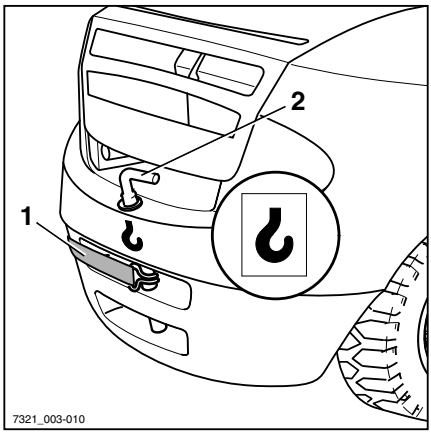

⚠ DANGER

The truck may slip if the harnesses slip!

The truck must be lashed securely to ensure that it does not move during transportation.

– Ensure that the harnesses are tightened securely and that the pads cannot slip off.

Crane loading

Crane loading is only intended for transporting the complete truck, including the lift mast, for its initial commissioning. This may be performed only by the authorised service centre with the harnesses expressly provided and approved for this purpose.

Short-term operation

NOTE

If the truck is operated frequently and only for short periods, the cooling circuit of the engine cannot reach the operating temperature. The evaporator of the LPG system is heated by the coolant circuit of the engine. This prevents the evaporator from icing over because gas cools significantly upon evaporation. The gas supply can be interrupted if the evaporator ices over. This causes the engine to come to a halt.

The evaporator can ice over as a result of:

- Frequent operation for short periods
- High engine loads at low ambient temperatures

NOTE

Avoid short-term operation and high motor loads in low ambient temperature wherever possible. If necessary, run the engine until the operating temperature is reached.

If the engine stalls suddenly and does not start again, check whether the evaporator has iced over and de-ice the evaporator as necessary; refer to the section entitled "De-icing the evaporator".

Decommissioning

Shutting down and storing the truck

⚠ CAUTION

Component damage due to incorrect storage!

If the truck is stored or shut down incorrectly for more than two months, it may suffer corrosion damage. If the truck is parked in an ambient temperature of less than –10°C for an extended period, the battery will cool down. The electrolyte may freeze and damage the battery.

– Carry out the following measures before shutdown.

⚠ CAUTION

Danger of tyre deformation by continuously loading on one side!

Have the truck raised and jacked up only by the authorised service centre so that all the wheels are clear of the ground. This prevents permanent deformation of the tyres.

⚠ CAUTION

Danger of damage from corrosion due to condensation on the truck!

Many plastic films and synthetic materials are watertight. Condensation water on the truck cannot escape through these covers.

– Do not use plastic film as this facilitates the formation of condensation water.

NOTE

Store only fully charged batteries.

Measures before shutdown

– Store the truck in a dry, clean, frost-free and well-ventilated environment.

– Clean the truck thoroughly; see the chapter entitled "Cleaning".

– Lift fork carriage to stop several times.

– Tilt the lift mast forwards and backwards several times and, if fitted, move attachment repeatedly.

- To relieve the strain on the load chains, lower the fork onto a suitable supporting surface, e.g. a pallet.
- Check the hydraulic oil level and top up if required.
- Apply a thin layer of oil or grease to all untreated moving parts.
- Grease the forklift truck.
- Lubricate the joints and controls.
- Remove LPG cylinder.
- Remove the battery and store in a warm and dry location.
- Regularly check the charge state of the battery and recharge if necessary.
- Apply a suitable contact spray to all exposed electrical contacts.
- Preserve the engine as specified by the manufacturer.
- Cover the truck with vapour-permeable materials, such as cotton, in order to protect against dust.
- If the truck is to be shut down for even longer periods, contact your authorised service centre to find out about additional measures.

Using after storage or decommissioning

⚠ DANGER

Risk of explosion!

If the truck has been parked in an enclosed space for an extended period of time, there is a risk of explosive gases forming as a result of potential leakages on the truck or as a result of gas emissions.

- Ventilate the room well before switching on the electrical system.

If the truck has been decommissioned for longer than six months it must be checked carefully before being used again. As with the an-

nual safety inspection, this check must also include all safety-related aspects of the truck.

– Thoroughly clean the truck.
– Lubricate the joints and actuators.
– Check the battery condition, acid level and acid density. Charge if necessary.
– Restore the engine to normal condition as specified by the engine manufacturer.
– Check the engine oil for condensation water. Change the hydraulic oil if necessary.
– Check the hydraulic oil for condensation water. Change the hydraulic oil if necessary.
– Replace the brake oil.
– Connect the LPG cylinder; see the chapter entitled "Changing the LPG cylinder".
– Check the LPG tank (variant).
– Check the LPG system for leak tightness using leak spray.
– Check the screw joints of the LPG system for tightness.
– Arrange for the authorised service centre to perform the same inspections and tasks that were carried out before initial commissioning.
– Perform the activities specified under "Visual inspections and function checking".

The following points in particular must be checked:

- Leak tightness and function of the LPG system
- Drive
- Controller
- Steering
- Brakes (service brake, parking brake)
- Lifting system (lifting accessories, load chains, mounting)

NOTE

For further information, see the workshop manual for the truck or contact the authorised service centre.

5

Maintenance

Safety regulations for maintenance

General information

⚠ DANGER

Risk of fatal poisoning!

It is dangerous to leave the engine running in enclosed spaces. The engine consumes oxygen and emits carbon dioxide, carbon monoxide and other poisonous gases. There is a risk of fatal poisoning!

– Only operate the truck in areas that are well ventilated.

To prevent accidents during maintenance work and repair work, all necessary safety measures must be taken, e.g.:

– Apply the parking brake.

– Switch off the key switch and remove the key.

– Ensure that the truck cannot move unintentionally or start up inadvertently.

– If required, have the truck jacked up by the authorised service centre.

– Have the raised fork carriage or the extended lift mast secured against accidental lowering by the authorised service centre.

– Insert an appropriately sized wooden beam as an abutment between the lift mast and the cab, and secure the lift mast to prevent it tilting backwards unintentionally.

– Observe the maximum lift height of the lift mast, and compare the dimensions from the technical data with the dimensions of the hall into which the truck is to be driven. These steps are taken to prevent a collision with the ceiling of the hall and to avoid any damage caused as a result.

Working on the hydraulic equipment

The hydraulic system must be depressurised prior to all work on the system.

Working on the electrical equipment

Work may only be performed on the electrical equipment of the truck when it is in a voltage-free state. Function checks, inspections and adjustments on energised parts must only be performed by trained and authorised persons, taking the necessary precautions into account. Rings, metal bracelets etc. must be removed before working on electric components.

To prevent damage to electronic systems with electronic components, such as an electronic driving regulator or lift control, these components must be removed from the truck prior to the start of electric welding.

Work on the electrical system (e.g. connecting a radio, additional headlights etc.) is only permitted with approval from the authorised service centre.

Working on the ignition system

To prevent personal injury and/or destruction of the ignition system, please observe the following:

- Only connect and disconnect ignition system lines, including high-voltage lines and measuring device lines, with the ignition switched off.
- If the engine is to be operated at starting speed but not actually started (e.g. for a compression pressure test), disconnect the connection assembly from the ignition coil.
- Use of a quick charger to jump start the engine is only permitted for a period of up to 1 minute at max. 16.5 volts.
- The engine may only be washed when the ignition is switched off.
- When performing electric or point welding, completely disconnect the battery.
- Trucks that have a fault in the ignition system, or a suspected fault, may only be towed if the plug is disconnected from the ignition coil.

Working on the LPG system

⚠ DANGER

Risk of explosion!

Observe the safety regulations for working with LPG.

The condition of the entire LPG system must be kept under constant surveillance to ensure safety of operation, in particular in terms of leakage. It is not permitted to use the truck if the gas system is leaking. When checking for leaks, soapy water, a solution of Nekal or other foaming products must be used.

⚠ DANGER

Risk of explosion!

It is not permitted to inspect the gas system using a naked flame for illumination.

The level of harmful substances in the exhaust gases must be set at the lowest possible value (CO content lower than 0.1 vol. % during idling with engine at operating temperature).

When replacing individual system parts, the manufacturers' installation instructions must be observed. The cylinder and main shut-off valves must be closed when doing so.

The condition of the electrical system of trucks running on LPG must be kept under constant surveillance. Sparks may cause explosions if system parts containing gas are leaking. After a truck running on LPG has been shut down for a long period of time, the storage room must be ventilated thoroughly before starting up the truck or its electrical system.

When working in maintenance workshops, the cylinder and main shut-off valves must be closed and the LPG cylinders protected from heat.

Before work breaks and the end of the day's work, a responsible person must check that all valves, in particular cylinder valves, are closed.

Do not perform any work involving fire, in particular welding and cutting jobs, near the LPG cylinders.

LPG cylinders, even when empty, must not be stored in workshops.

Safety devices

After maintenance and repair work, all safety devices must be reinstalled and tested for operational reliability.

Set values

The device-dependent set values must be observed when making repairs and when changing hydraulic and electrical components. These are listed in the appropriate sections.

Lifting and jacking up

⚠ DANGER

There is a risk to life if the truck tips over!

If not raised and jacked up properly, the truck may tip over and fall off. Only the hoists specified in the workshop manual for this truck are allowed and are tested for the necessary safety and load capacity.

- Only have the truck raised and jacked up by the authorised service centre.
- Only jack the truck up at the points specified in the workshop manual.

The truck must be raised and jacked up for various types of maintenance work. The authorised service centre must be informed that this is to take place. Safe handling of the truck and the corresponding hoists is described in the truck's workshop manual.

Working at the front of the truck

⚠ DANGER

Risk of accident!

If the lift mast or fork carriage is raised, no work may be performed on the lift mast or at the front of the truck unless the following safety measures are observed.

- When securing, only use chains with sufficient load-bearing capacity.
- Contact the authorised service centre.

⚠ CAUTION

Possibility of damage to the ceiling!

– Note the maximum lift height of the lift mast.

Securing the lift mast against tilting backwards

A hardwood beam with a cross-section of 120 x 120 mm is required. The length of the hardwood beam must approximately correspond to the width of the fork carriage (b3). To avoid impact injuries, the hardwood beam must not protrude beyond the outer contour of the truck. A maximum length matching the total width (b1) of the truck is recommended.

– Obtain the dimensions (b1) and (b3) from the corresponding VDI datasheet.

– Clamp the hardwood beam (1) between the driver protection structure (2) and the lift mast (3). ▷

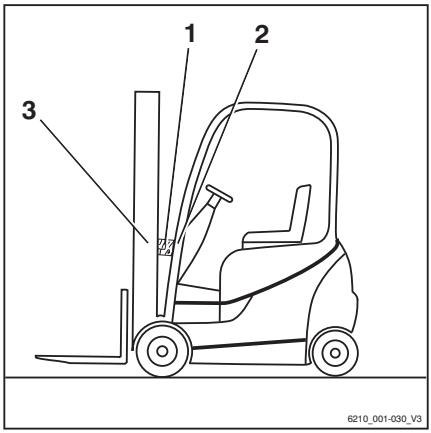

Removing the lift mast

⚠ DANGER

Risk of accident!

This work must only be performed by an authorised service technician.

– Arrange for an authorised service technician to remove the lift mast.

Securing the lift mast against falling off

⚠ DANGER

Risk of accident!

This work must only be performed by an authorised service technician.

– Arrange for an authorised service technician to secure the lift mast.

General maintenance information

Personnel qualifications

Only qualified and authorised personnel are allowed to perform maintenance work. Regular safety checks and checks after unusual incidents must be performed by a competent person. The competent person must conduct their evaluation and assessment from a safety standpoint, unaffected by operational and economic conditions. The competent person must have sufficient knowledge and experience to be able to assess the condition of a truck and the effectiveness of the protective devices in accordance with technical conventions and the principles for testing trucks.

Maintenance work without special qualifications

Simple maintenance work, such as checking the hydraulic oil level, may be carried out by untrained personnel. A qualification such as those held by a competent person is not required to carry out this work. The required tasks are described in the chapter entitled "Remaining ready for operation".

Information for carrying out maintenance

This section contains all information required to determine when the truck needs maintenance. Carry out maintenance work within the time limits according to the hour meter and using the following maintenance check lists. This is the only way to ensure that the truck remains ready for operation and provides optimal performance and service life. It is also a precondition for any warranty claims.

Maintenance timeframe

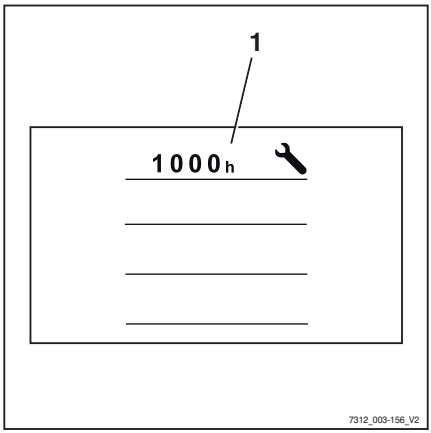

– Carry out maintenance work on the truck in accordance with the "Service in" display (1).

– The maintenance check lists indicate the maintenance work that is due.

The intervals are defined for standard use. Shorter maintenance intervals can be defined in consultation with the operating company, depending on the application conditions of the truck.

The following factors may necessitate shorter maintenance intervals:

- Contaminated, poor quality roads
- Dusty or salty air
- High levels of air humidity
- Extremely high or low ambient temperatures, or extreme changes in temperature
- Multi-shift operation with a high duty cycle
- Specific national regulations for the truck or individual components

⚠ CAUTION

Risk of component damage!

Any deviating technical information in these operating instructions takes precedence over the information in the original engine operating instructions.

– If you have any questions, please contact your authorised service centre.

Setting up and adjusting the due date counter for maintenance and safety checks

On delivery from the factory, the display-operating unit indicates to the driver the number of operating hours until the standard maintenance intervals of 1000 h and 3000 h are due. The display also shows the latest date for maintenance.

To do this, proceed as follows:

– Press the `Service` 🔧 softkey.

– Press the `Maintenance interval` softkey.

▷

1000-h interval	**880 h**
3000-h interval	**2120 h**
Latest date:	**04.02.22**

Setup and adjustment by the fleet manager

For the fleet manager, due date counters are also defined for the following checks:

- Regular testing of the truck for electric trucks and IC trucks
- Battery testing for electric trucks
- Exhaust gas testing and LPG testing for IC trucks

For these tests, the fleet manager can define the corresponding due dates with his access authorisation. To do this, proceed as follows:

– Activate the "Access authorisation for the fleet manager".

– Press the `Service` 🔧 softkey.

– Press the `Maintenance interval` softkey.

– Press the softkey for the testing whose due date is to be set, e.g. `Safety check`. ▷

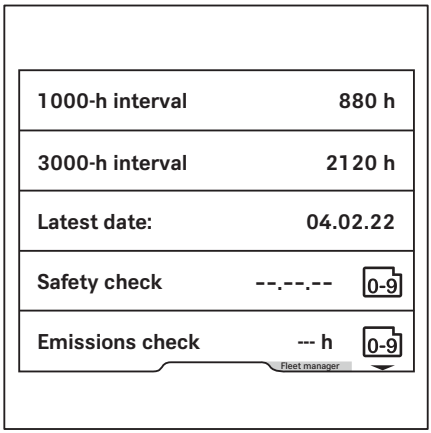

`Safety check` menu ▷

– Press the scroll button ▽ to activate the input.

– Enter the desired date using softkeys `0 to 9`.

– To `save`, press the ▤ button.

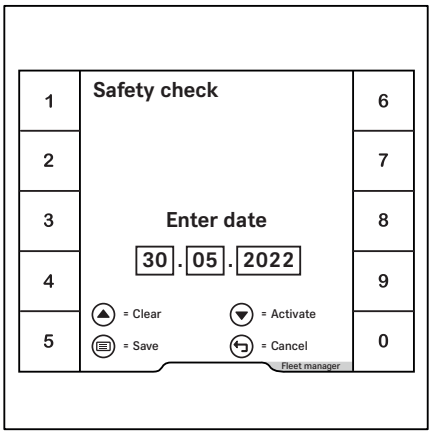

Due date counter for individual maintenance intervals

The authorised service centre can set up additional due date counters for individual maintenance intervals, e.g. for an attachment. The fleet manager can use his access authorisation to configure these due date counters. The process is then the same as for the due date counters created ex works.

Maintenance - 1000 hours/annually

At operating hours										Carried out	
1000		2000		4000		5000		7000			
8000		10000		11000		13000		14000		✓	✗
Chassis, bodywork and fittings											
Check the chassis for cracks.											
Check the overhead guard, plus the cab and glass panes where relevant, for damage.											
Variant: Check that the cab door sensor is working correctly and check for damage.											
Check the controls, switches and joints for damage, and apply grease and oil.											
Check that the driver's seat is working correctly and check for damage.											
Check that the driver restraint system is working correctly and check for damage, and clean.											
Check the signal horn.											
Variant: Check the dual-pedal variant for damage and that it is working correctly, and lubricate. Perform calibration.											
Tyres and wheels											
Check tyres for wear and check the air pressure if necessary.											
Check the wheels for damage and check the tightening torques.											
Internal combustion engine											
Check the condition of the internal combustion engine (visual inspection).											
Check the V-belt.											
Change the engine oil and replace the oil filter.											
Replace the air filter (main cartridge).											
Check the cooling system for leak tightness and correct function.											
Check the coolant and top up if necessary.											
Fuel system											
Check the fuel system for leak tightness and correct function.											
Replace the fuel filter (yearly).											
LPG system											
Check the LPG system for damage.											
Check the solenoid shut-off valve.											
Check the gas cylinder valve for cleanliness and correct function; check the overpressure safety device (30 bar).											
Replace the LPG filter.											

At operating hours										Carried out	
1000		2000		4000		5000		7000			
8000		10000		11000		13000		14000		✓	✖
Check the screw joints for secure attachment and perform a leak test.											
Exhaust system											
Check the exhaust system.											
Remove the particle filter and perform ash cleaning every 10,000 operating hours.											
Drive axle											
Check the mounting of the drive axle and check the drive axle for leak tightness.											
Check the power cable and sensor cable for damage.											
Check the oil level in the drive wheel units.											
Change the gearbox oil in the drive wheel units (once after the first 1000 operating hours).											
Steering systems											
Check the steering system for leaks and check that it is working correctly.											
Check that the steering wheel is securely attached and check the rotary handle for damage.											
Check the mounting of the steering axle and check the steering axle for leak tightness.											
Grease all lubricating nipples on the steering axle.											
Check the steering stop.											
Brake system											
Check the condition of all mechanical brake parts and check that they are working correctly.											
Check the actuation distance of the brake pedal and adjust if necessary.											
Check the filling level in the brake reservoir.											
Check that the electrical filling level monitoring function is working correctly.											
Check that the emergency actuation of the parking brake is working correctly.											
Perform a brake test.											
Electrical system											
Check all power cable connections.											
Check that the switches, transmitters and sensors are working correctly.											
Check the lighting and indicator lights.											
Cooling system (converter)											
Check the cooling system for leak tightness and correct function.											

At operating hours										Carried out	
1000		2000		4000		5000		7000			
8000		10000		11000		13000		14000		✓	✗
Check the coolant and top up if necessary.											
Clean the fan and the water cooler.											
Starter battery											
Measure the cold-start current; recharge or replace the battery if necessary.											
Hydraulics											
Check the condition of the hydraulic system, check that it is working correctly and check for leak tightness.											
Check the hydraulics blocking function (ISO valve).											
Check the oil level.											
Lift mast											
Check the mast fixation for damage. Lubricate the mast fixation and check the tightening torque.											
Check the mast profiles for damage and wear. Lubricate the mast profiles.											
Check the guide in the lower (load reversal) mast profile for damage and for wear.											
Check the load chains for damage and wear. Adjust and lubricate the load chains.											
Check the lift cylinders and connections for damage and for leak tightness.											
Check the guide pulleys for damage and for wear.											
Check the support rollers and chain rollers for damage and for wear.											
Check the play between the fork carriage stop and the run-out barrier.											
Check the tilt cylinders and connections for damage and for leaks.											
Check the fork carriage for damage and for wear.											
Check the fork arm interlock for damage and check that it is working correctly.											
Check the fork arms for wear and deformation.											
Check that there is a safety screw on the fork carriage or on the attachment.											
Special equipment											
Check the condition of the antistatic belt or antistatic electrode.											
Check the filter mat in the heating system or air conditioning, and replace if necessary.											
Check that the heating system is working correctly; observe the manufacturer's maintenance instructions.											
Check that the air conditioning is working correctly; observe the manufacturer's maintenance instructions.											

At operating hours										Carried out	
1000		2000		4000		5000		7000			
8000		10000		11000		13000		14000		✓	✗
Check the attachments for wear and for damage; observe the manufacturer's maintenance instructions.											
Check the trailer coupling for wear and for damage; observe the manufacturer's maintenance instructions.											
General											
Read out the error numbers and clear the list.											
Reset the maintenance interval.											
Check that the labelling is complete.											
Perform a test drive.											

Maintenance - 3000 hours/every two years

At operating hours										Carried out	
3000		6000		9000		12000		15000		✓	✗
Note											
Perform all 1000-hour maintenance work											
Internal combustion engine											
Replace the air filter (safety cartridge).											
Replace the V-belt.											
Replace the coolant every 6000 operating hours or every 3 years.											
LPG: Replace the spark plugs.											
LPG system											
Replace all hoses on the LPG system.											
Replace the evaporator. Replace the sticker. Every 3000 operating hours or every 3 years.											
Drive axle											
Change the gearbox oil in the drive wheel units.											
Brake											
Change the actuation oil for the foot brake.											
Hydraulics											
Change the hydraulic oil											
Replace the return line filter and the breather filter.											
Replace the high-pressure filter.											

Ordering spare parts and wearing parts

Spare parts are provided by our spare parts service department. The information required for ordering parts can be found in the spare parts list.

Only use spare parts as per the manufacturer's instructions. The use of unapproved spare parts can result in an increased risk of accidents due to insufficient quality or incorrect assignment. Anyone using unapproved spare parts shall assume unlimited liability in the event of damage or harm.

Quality and quantity of the required operating materials

Only the operating materials specified in the maintenance data table may be used.

– The required consumables and lubricants can be found in the maintenance data table.

Oil and grease types of a different quality must not be mixed. This negatively affects the lubricity. If a change between different manufacturers cannot be avoided, drain the old oil thoroughly.

Before carrying out lubricating work, filter changes or any work on the hydraulic system, carefully clean the area around the part involved.

When topping up working materials, use only clean containers!

Lubrication plan

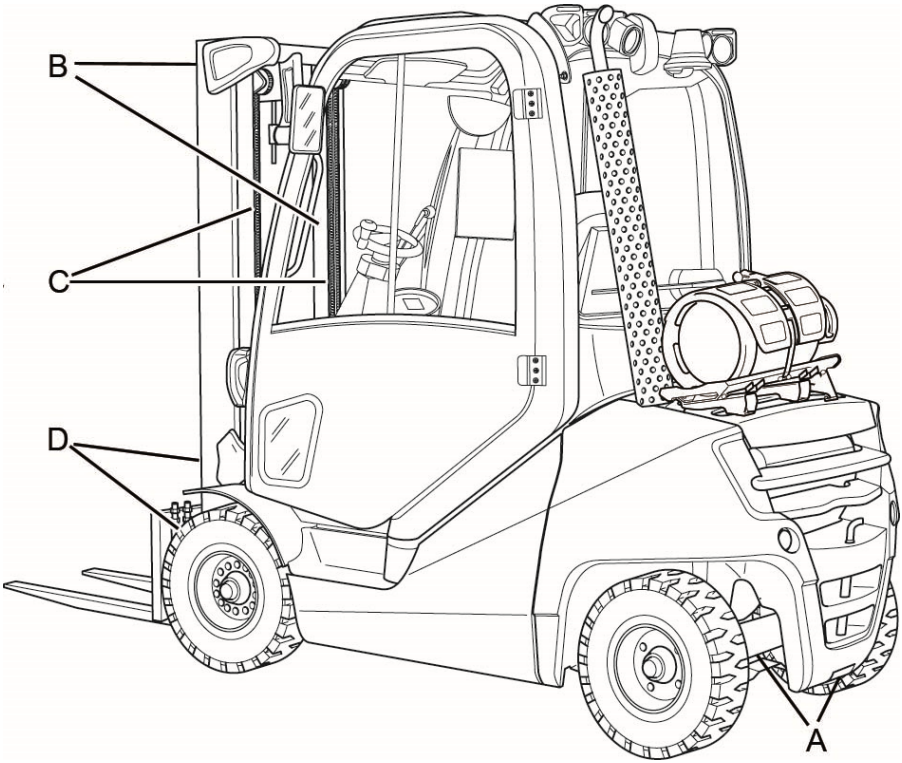

Code[1]	Lubrication point
(A)	Four lubricating nipples on each side of the steering axle for the axle stub bearing and track rod arm
(B)	Sliding surfaces on the lift mast
(C)	Load chains
(D)	One lubricating nipple each on both lift mast bearings

[1]See the following chapter, "Maintenance data table", under this Code.
for the respective lubricant specificationThis lubrication plan describes the series-production truck with standard equipment. For maintenance points on variant trucks, see the relevant chapter and/or instructions provided by the manufacturer.

Maintenance data table

General lubrication points

Code	Unit	Operating material	Specifications	Amount
	Lubrication	Multi-purpose grease	DIN 51825 KPF2	As required

Actuators/joints

Code	Unit	Operating material	Specifications	Amount
	Lubrication	Multi-purpose grease	DIN 51825 KPF2	As required
		Oil	SAE 80 MIL-L2105 API GL-4	As required
	Dual-pedal operation	Multi-purpose grease	DIN 51825 KPF2	As required

Battery

Code	Unit	Operating material	Specifications	Amount
	System filling	Distilled water		As required
	Insulation resistance		For further information, refer to the workshop manual for the truck in question.	

Electrical system

Code	Unit	Operating material	Specifications	Amount
	Insulation resistance		For further information, refer to the workshop manual for the truck in question.	

Hydraulic system

Code	Unit	Operating material	Specifications	Amount
	System filling	Hydraulic oil	HVLP 68 DIN 51524, Part 3	Max. 58 l
		Hydraulic oil for the food industry (variant)	USDA H1 DIN 51524	

Tyres

Code	Unit	Operating material	Specifications	Amount
	Superelastic tyres	Wear limit		To wear mark
	Solid rubber tyres	Wear limit		To wear mark
	Pneumatic tyres	Minimum tread depth		1.6 mm
		Air pressure		See information on truck

Steering axle

Code	Unit	Operating material	Specifications	Amount
	Wheel nuts/screws	Torque wrench		For further information, refer to the workshop manual for the truck in question.
	Axle stub nuts	Torque wrench		For further information, refer to the workshop manual for the truck in question.
(A)	Axle stub bearings, track rod bearings	Multi-purpose grease	DIN 51825 KPF2	As required

Drive axle

Code	Unit	Operating material	Specifications	Amount
	Wheel nuts/screws	Torque wrench		For further information, refer to the workshop manual for the truck in question.
	Wheel gear	Gearbox oil	SAE 80W-90 API GL-4	
	Brake	Brake oil	Shell Spirax S4 ATF HDX	

Lift mast

Code	Unit	Operating material	Specifications	Amount
(B)	Lubrication	Multi-purpose grease	DIN 51825 KPF2	As required
	Stop	Play		Min. 2 mm
	Screws for the lift mast bearing	Torque wrench		For further information, refer to the workshop manual for the truck in question.
(D)	Lift mast bearing	Grease	Aralub 4320 DIN 51825- KPF2N20 ID no. 0148659	Fill with grease until a small amount of fresh grease escapes

Load chains

Code	Unit	Operating material	Specifications	Amount
(C)	Lubrication	High-load chain spray	Fully synthetic Temperature range: -35 °C to +250 °C ID no. 0156428	As required

Cooling system

Code	Unit	Operating material	Specifications	Amount
	System filling	Corrosion inhibitor and cooling system protecting agent/water	G12 plus TL-VW 774 F	Approx. 12 l

Air conditioning

Code	Unit	Operating material	Specifications	Amount
	System filling	Refrigerant	ID no. 7449600005	Standard cab: 800 g

LPG cylinder

Code	Unit	Operating material	Specifications	Amount
	System filling	LPG	DIN 51622 EN 589	11 kg

Brake system

Code	Unit	Operating material	Specifications	Amount
	System filling	Brake oil	Shell Spirax S4 ATF HDX	0.25 l

Engine

Code	Unit	Operating material	Specifications	Amount
	System filling	Engine oil	API CK-4 ACEA E6/E9 SAE 5W-30, 10W-30 or 10W-40	With filter change 8.6 l
	Air filter	Filter cartridge and safety cartridge		
	Ignition system	Spark plugs	14L-NGK	Electrode gap: 1.0 ± 0.1 mm Tightening torque: 20 Nm

Washer system

Code	Unit	Operating material	Specifications	Amount
	System filling	Screen wash	Winter, ID no. 172566	As required

Providing access to maintenance points

Opening the bonnet

⚠ WARNING

Risk of injury!

– Switch off the engine before opening the bonnet!

⚠ CAUTION

When opening the bonnet, the driver's seat may be damaged if it is not in its forwardmost position.

– Slide the driver's seat all the way forwards.

⚠ CAUTION

If the right-hand door of the cab (variant) is closed, door fittings can be damaged when the bonnet is opened.

– Make sure that the right-hand cab door is open.

– On forklift trucks equipped with a cab (variant), open the right-hand cab door.

– Remove all loose objects from the right-hand shelf.

– Move the steering column (1) as far forwards as possible and secure; see section entitled "Adjusting the steering column".

– Slide the driver's seat (2) all the way forward; see section entitled "Adjusting the MSG 65/MSG 75 driver's seat".

– On trucks equipped with a rear window (variant), push the seat backrest forwards; see section entitled "Adjusting the MSG 65/MSG 75 driver's seat".

▷

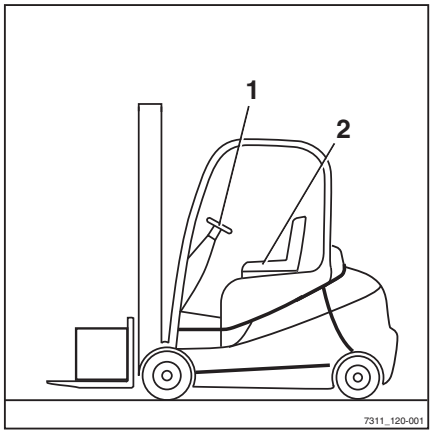

– Firmly insert a narrow screwdriver into the slot (4) of the bonnet release until the interlock opens. ▷
– Use the handle to open the bonnet fully.

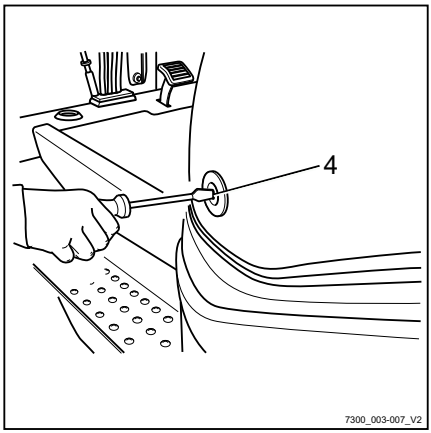

– If the gas spring is equipped with a position lock (variant), open the bonnet until the latch (1) of the gas spring (2) snaps into place. ▷

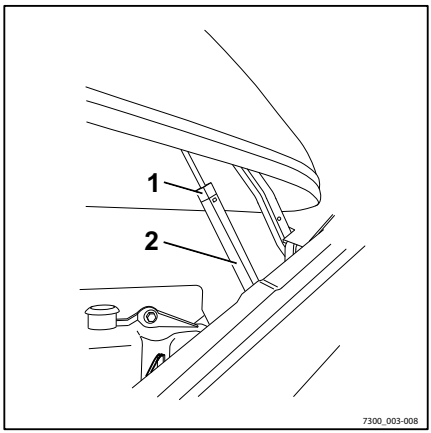

⚠ WARNING

Risk of injury from the bonnet lowering!

The bonnet is fitted with a gas spring that holds the bonnet in the open position. When additional load is present, for example heavy objects, strong wind or other persons, the bonnet can lower suddenly. Cold weather and ageing can also reduce the performance of the gas spring and cause the bonnet to lower.

– If the force of the gas spring is deteriorating, replace the gas spring.
– If the gas spring has a position lock (variant), make sure that the latch is engaged.
– To replace the gas spring, contact the authorised service centre.

Closing the bonnet

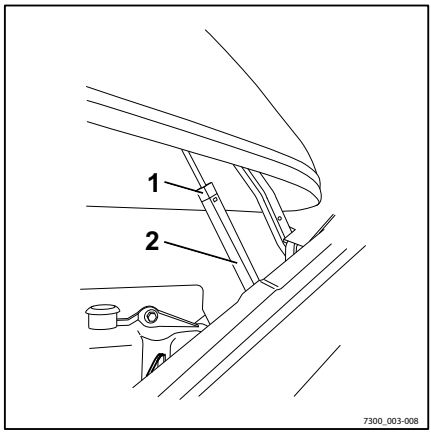

⚠ WARNING

When closing the bonnet, there is a risk of crushing!

When closing the bonnet, nothing must come between the bonnet and the edge of the chassis.

– Do not grasp any edges. Always close the bonnet by grasping one of the handles in each hand.

⚠ CAUTION

Risk of damage!

The bonnet can be equipped with a gas spring (2) with a prop (variant). This prevents the gas spring from being compressed. Exerting force when closing the bonnet will damage the gas spring or bonnet suspension.

– Before closing the bonnet, make sure that the gas spring is equipped with a prop (variant).

– For gas springs with props (variant), release the latch (1) before closing the bonnet.

Releasing the prop latch (variant)

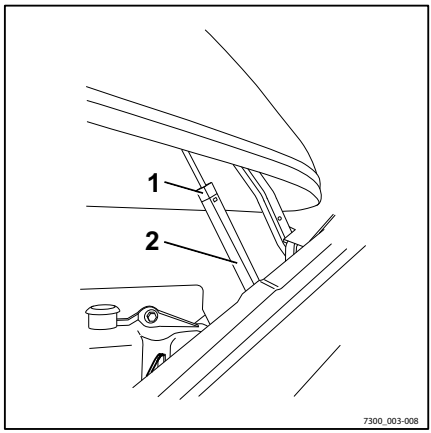

– Press the latch (1) at the marking PRESS and lower the bonnet slightly.

– Release the latch.

Closing the bonnet

– Holding it by the handle, pull down the bonnet until the lock audibly engages.

Providing access to maintenance points

– Adjust the seat (2); see section entitled "Adjusting the MSG 65/MSG 75 driver's seat". ▷

– Adjust the steering column (1); see section entitled "Adjusting the steering column".

– On forklift trucks equipped with a cab (variant), close the right-hand cab door.

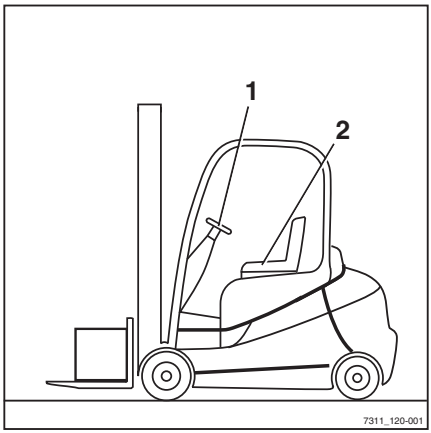

Removing and attaching the rear cover

⚠ CAUTION

Risk of damage to components!

Improper handling can cause the surface or the cover itself to be damaged.

– Always remove and install covers carefully, and safely place to one side after removal.

Removing the cover

▷

– Unscrew the star-grip screws (1) on the right and left.

– Fold back the cover (2).

– Lift up and remove the cover.

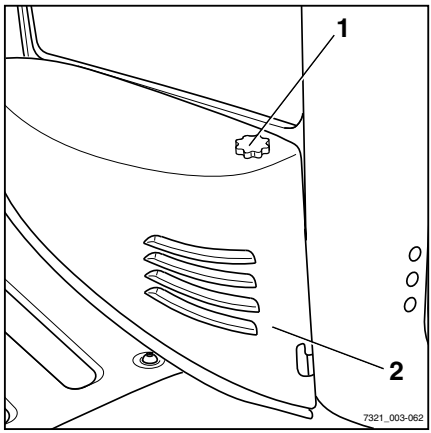

Attaching the cover

▷

– Fit the cover (2) from above.

– Fold the cover forwards.

– Securely tighten the star-grip screws (1) on the right and left.

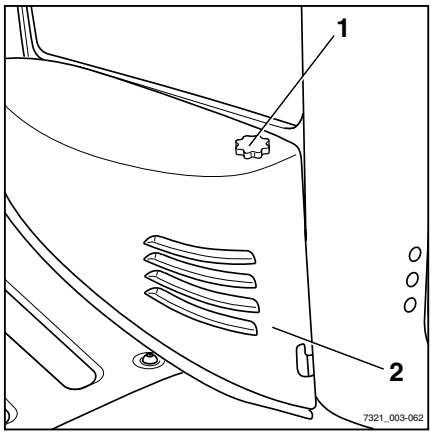

Installing and removing the bottom plate

Removing the bottom plate

⚠ CAUTION

Risk of short circuit if cables are damaged!

- Check the connection cables for damage.
- When removing and reinstalling the bottom plate, make sure that the connecting cables are not damaged.

NOTE

The bottom plate has a recess into which the operator can insert their fingers in order to lift it. The recess is beneath the rubber mat.

NOTE

The accelerator pedal is attached to the bottom plate and is removed with the bottom plate. The connecting plug for the accelerator is located underneath the bottom plate.

- Open the bonnet.
- Remove the rubber mat.
- Grasp the recess in the bottom plate (1).
- Raise the bottom plate slightly.
- Pull out the bottom plate under the brake pedal and set it down upright. ▷

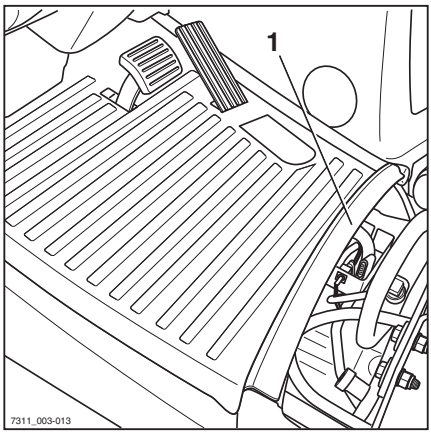

– Disconnect the plug connection from the accelerator pedal (2). ▷

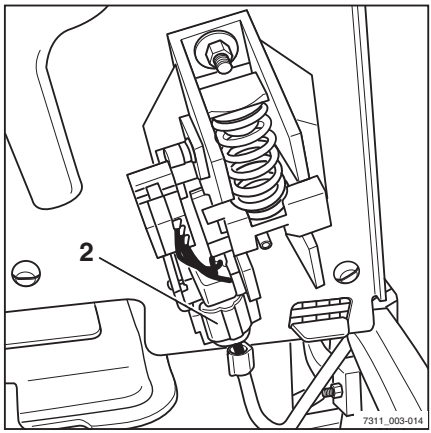

– Remove the floor plate and place it in a secure location.

Installing the bottom plate

⚠ WARNING

Risk of crushing between the bottom plate and the frame edge!

If limbs or objects are between the bottom plate and frame edge when the bottom plate is closed, they can be crushed.

– Make sure that, when you close the bottom plate, there is nothing between the bottom plate and the frame edge.

– Set down the bottom plate upright in the footwell.

– Connect the connection assembly to the accelerator pedal.

– Position the bottom plate at the front.

– Carefully guide the bottom plate down and close.

– Insert the rubber mat.

– Close the bonnet.

Maintenance after the first 50 operating hours

Maintenance during the break-in period

NOTE

Some of the following checks require special tools. Notify your authorised service centre.

– Have the LPG system checked for leakages using leak spray.

– Have the screw joints of the LPG system checked for tightness.

– Check the condition and tension of the V-ribbed belt (1).

NOTE

If the V-ribbed belt is damaged, have it replaced by the authorised service centre.

▷

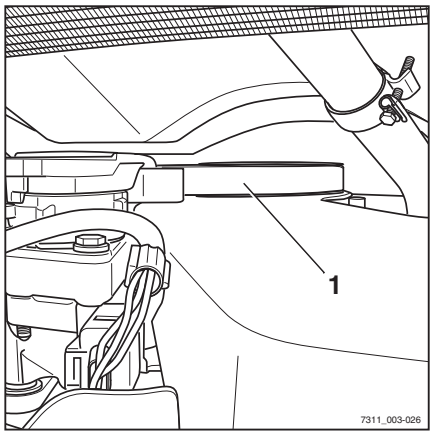

Preserving operational readiness

Checking the engine oil level

NOTE

The truck must be positioned on level ground for this test.

– Open the bonnet.

– Pull out the oil dipstick (1) and wipe it. ▷

– Insert the oil dipstick as far as it will go and pull it out again.

The oil level must be between the marks (arrows).

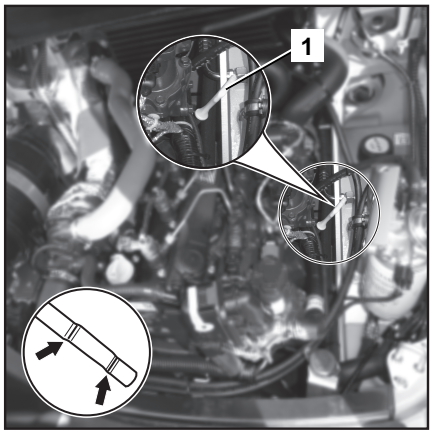

– If the oil level reaches only up to the lower mark, unscrew the filler cap (2) and top up the oil. Do not top up beyond the upper mark. ▷

– Observe the information regarding the quantity and specification of the motor oil in the chapter entitled "Maintenance data table".

– Insert the oil dipstick as far as it will go.

– Screw the filler cap back on tightly.

– Close the bonnet.

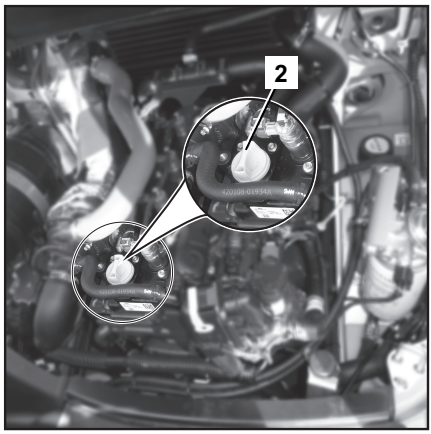

NOTE

Remove spilt oil immediately using oil binding agent and dispose of the oil in accordance with the applicable regulations.

Cleaning the dust valve

– Press the dust valve (1) on the air filter housing between your fingers until no more dust is emitted.

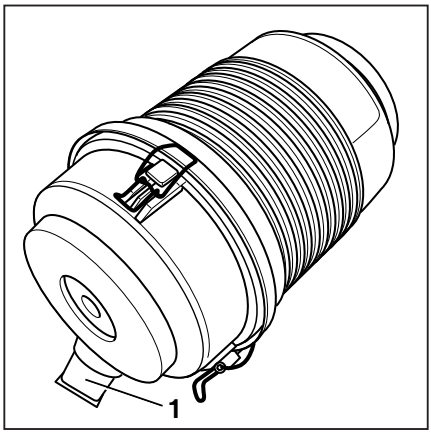

Filling the washer system

⚠ CAUTION

Components may become damaged due to the effects of frost!

Water expands when it freezes. If there is no anti-freeze in the washer system (variant), the screen wash can freeze at temperatures below freezing and damage the washer system.

– Always use screen wash that contains anti-freeze.

– Open the bonnet.

– Open the filler cap (1) on the screen wash reservoir.

– Fill the screen wash reservoir with screen wash and anti-freeze in accordance with the maintenance data table.

– Close the filler cap.

– Close the bonnet.

– Operate the washer system until washer fluid is discharged from the spray nozzles.

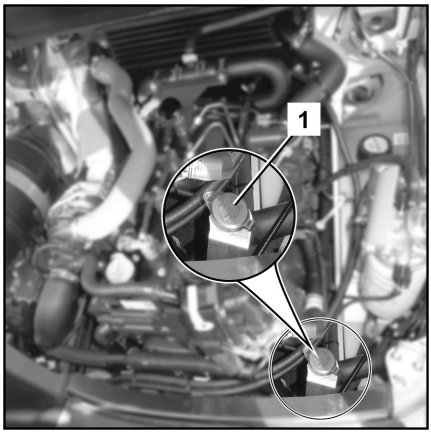

Cleaning the radiator, checking for leaks

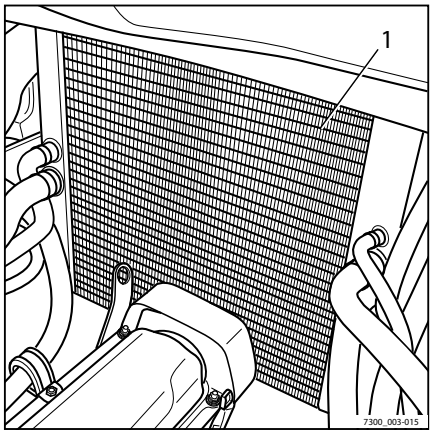

- Park the truck securely.
- Open the bonnet.
- Clean the radiator (1).
- Clean the radiator fins using a suitable brush and blow them out using compressed air (max. 2 bar).
- Check the radiator and coolant hoses for leaks and tighten the clips if necessary.

⚠ CAUTION

Risk of engine damage!

If the cooling fluid level is low, this indicates a leak in the cooling system.

- Check whether the leakage has been eliminated.
- If not, notify the authorised service centre.

- Close the bonnet.

Check the cooling fluid level

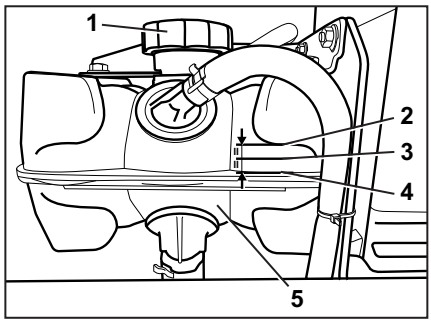

⚠ WARNING

Risk of scalding due to hot cooling fluid!

The cooling system is pressurised! Cooling fluid may escape if the cooling fluid tank (5) is opened while the engine is hot.

- Switch off the engine and allow it to cool down before opening the filler cap (1).

⚠ WARNING

Coolant and cooling fluid can pose a hazard to health and the environment!

- Observe the safety regulations set out in the section entitled "Coolant and cooling fluid".

⚠ CAUTION

Risk of engine damage!

If the cooling fluid level is low, this indicates a leak in the cooling system.

- Check the cooling system for leaks.

The cooling fluid level is monitored by a sensor. As soon as the COOLANT LEVEL message appears on the display, proceed as described below:

– Switch off the engine and let it cool down.

– Remove the rear cover.

– Slowly open the filler cap (1) of the cooling fluid tank (5) and release the excess pressure.

– Unscrew further and remove the filler cap.

– Check the cooling fluid level.

The cooling fluid level must be between (3) the upper marking (2) and the lower marking (4), at an equal distance from each marking.

– Top up the cooling fluid to no higher than the upper marking, if necessary.

– Make sure that the tank cap (1) is screwed on and is tightly sealed.

– Check the leak tightness of the cooling system; see the section entitled "Cleaning the radiator, checking for leaks".

– Replace the rear cover.

▷

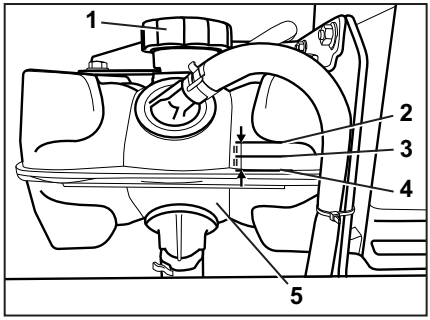

Topping up the cooling fluid and checking the coolant concentration

▷

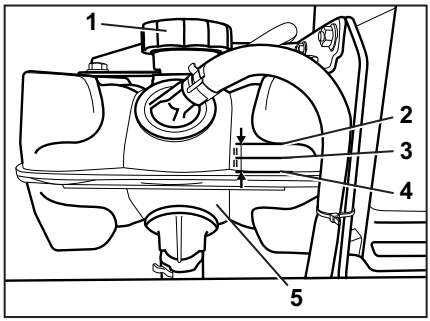

⚠ WARNING

Risk of scalding due to hot cooling fluid!

The cooling system is pressurised! Cooling fluid may escape if the cooling fluid tank (5) is opened while the engine is hot.

– Switch off the engine and allow it to cool down before opening the filler cap (1).

⚠ WARNING

Coolant and cooling fluid can pose a hazard to health and the environment!

– Observe the safety regulations set out in the section entitled "Coolant and cooling fluid".

⚠ CAUTION

Risk of engine damage!

If the cooling fluid level is low, this indicates a leak in the cooling system.

– Check the cooling system for leaks.

– Switch off the engine and let it cool down.

– Remove the rear cover.

– Slowly open the filler cap (1) of the cooling fluid tank (5) and release the excess pressure.

– Unscrew further and remove the filler cap.

– Check the concentration of the coolant.

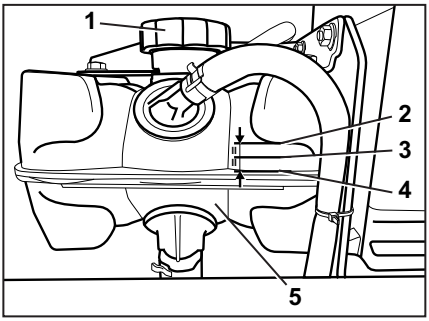

Concentration of the coolant

⚠ CAUTION

Risk of corrosion!

The percentage of coolant must always be at least 40%, even if frost protection is not needed in warmer climates.

If greater frost protection is required for climatic reasons, the percentage of coolant additive can be increased to up to 60%.

The percentage of coolant must not exceed 60%, otherwise the frost protection is reduced. In addition, the cooling effect is also reduced.

– Only use clean, softened water for the water percentage.

Frost protection up to °C	Water percentage %	Coolant percentage %
-25	60	40
-30	55	45
-35	50	50
-40	40	60

For information about the filling quantity in the cooling system, see the "Maintenance data table".

⚠ CAUTION

Coolant with a different specification must not be mixed in!

- Only use the coolant specified in the maintenance data table to top up the cooling system.
- Only use coolant according to the manufacturer's instructions.

- Make sure that the tank cap (1) is screwed on and is tightly sealed.
- Check the leak tightness of the cooling system; see the section entitled "Cleaning the radiator, checking for leaks".
- Replace the rear cover.

Replacing the air filter cartridges

NOTE

The air filter cartridges must be replaced if the `Change the air filter` *message appears on the display-operating unit or at least every 3000 hours or every two years.*

- Open the bonnet.
- Release the three clamps (1) on the air filter housing and remove the air filter cover (2). ▷

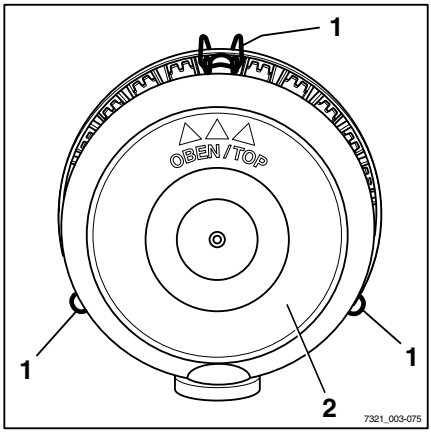

– Remove the filter cartridge (3). ▷

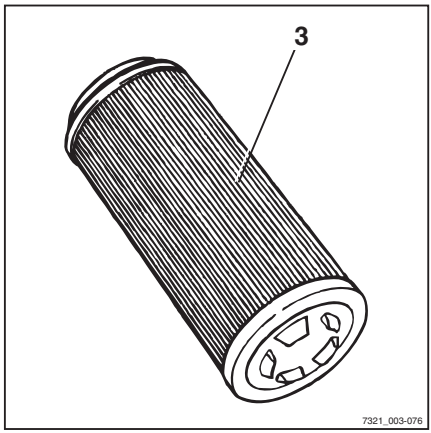

⚠ CAUTION

Risk of engine damage!

The safety cartridge must remain in the air filter housing until all residual dirt has been removed from the housing so that no dirt enters the intake system!

– Wipe out the air filter housing using a damp cloth.

– Remove the safety cartridge (4), check for contamination and replace the safety cartridge if necessary. ▷

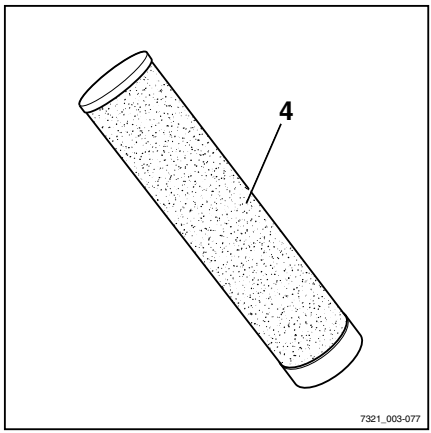

– Refit the safety cartridge.

– Insert a new filter cartridge (3).

– Fit the air filter cover (5) with the mark (6) facing upwards. ▷
– Lock the clamps (7) on the air filter.
– Close the bonnet.

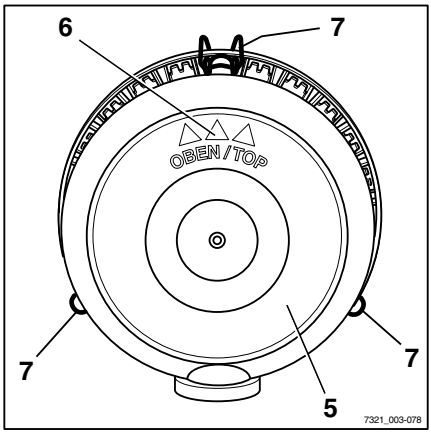

Lubricating the joints and controls

– Oil or grease other bearing points and joints according to the maintenance data table; see ⇒ Chapter "Maintenance data table", Page 420 .

- Driver's seat guide
- Lubricate bonnet hinges at the lubricating nipple
- Control linkage for valves
- In the cab, lubricate door hinges at the lubricating nipple (variant)
- Lubricate shafts and joints in dual-pedal operation (variant)

Maintaining the seat belt

DANGER

There is a risk to life if the seat belt fails during an accident!

If the seat belt is faulty, it may tear or open during an accident and no longer keep the driver in the driver's seat. The driver may therefore be hurled against the truck components or out of the truck.

- Ensure operational reliability by continually testing.
- Do not use a truck with a defective seat belt.
- Have any defective seat belts replaced by your authorised service centre.
- Only use genuine spare parts.
- Do not make any changes to the seat belt.

NOTE

The checks below must be carried out on a regular basis (monthly). In the case of significant strain, a daily check is necessary.

Checking the seat belt

- Pull out the seat belt (3) completely and check for fraying.

The seat belt must not be frayed or cut. The stitching must not be loose.

- Check that the seat belt is not dirty.
- Check whether parts are worn or damaged (including the anchor points).

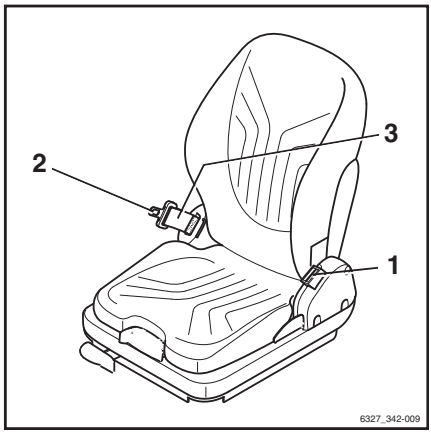

– Check the buckle (1) for proper locking. ▷

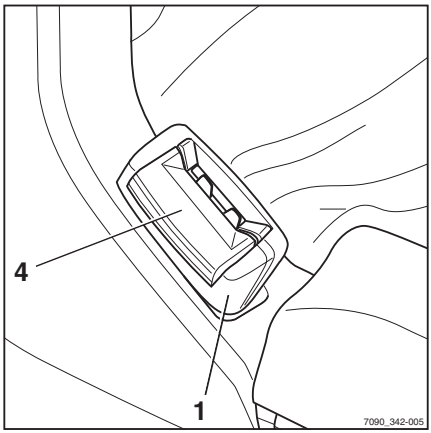

When the belt tongue (2) is inserted, the seat belt must be held securely. The belt tongue (2) must release when the red button (4) is pressed.

– The automatic blocking mechanism must be tested at least once a year:

– Park the forklift truck on level ground.

– Pull out the seat belt using a jerking movement.

The automatic blocking mechanism must block extension of the belt.

– Tilt the seat at least 30°; to do this, tilt the bonnet.

– Slowly pull out the seat belt.

The automatic blocking mechanism must block extension of the belt.

Cleaning the seat belt

– Clean the seat belt if it is dirty but without using chemical cleaning materials (a brush will suffice).

Replacement after an accident

The seat belt must always be replaced by the authorised service centre after an accident.

Checking the driver's seat ▷

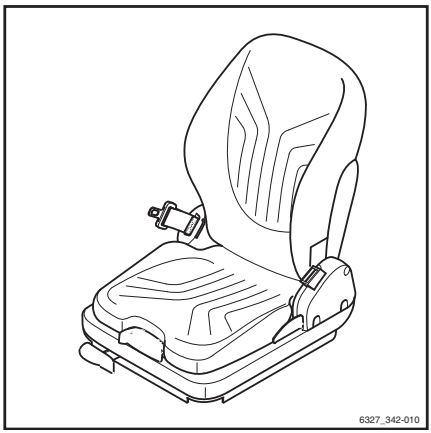

⚠ WARNING

Risk of injury!

– After an accident, check the driver's seat with attached restraining belt and fastening.

– Check the controls for correct operation.

– Check the condition of the seat (e.g. wear on the upholstery) and secure fastening to the hood.

⚠ WARNING

Risk of injury!

– Have the seat repaired by the service centre if you identify any damage during the checks.

Checking the door latch

– Inspect the condition of the catch bolt and check for wear.

– Check the lock mechanism for easy operation.

Maintaining wheels and tyres

⚠ WARNING

Risk of accident!

Uneven wear reduces the stability of the truck and increases the braking distance. The level of wear exhibited by tyres on the same axle must be approximately the same.

– Worn or damaged tyres (left or right) must be replaced immediately.

– When changing wheels or tyres, ensure that this does not cause the truck to tilt to one side (e.g. always replace right-hand and left-hand wheels at the same time).

– Changes must only be made following consultation with the manufacturer.

⚠ WARNING

Risk to stability!

Tyre quality affects the stability of the truck. There is a risk of tipping!

When using pneumatic tyres or solid rubber tyres, rim parts must never be changed and rim parts from different manufacturers must not be mixed.

– Obtain approval from the truck manufacturer before using a different type of tyre or a different tyre manufacturer.

Checking the condition and wear of the tyres

Superelastic tyres (variant)

▷

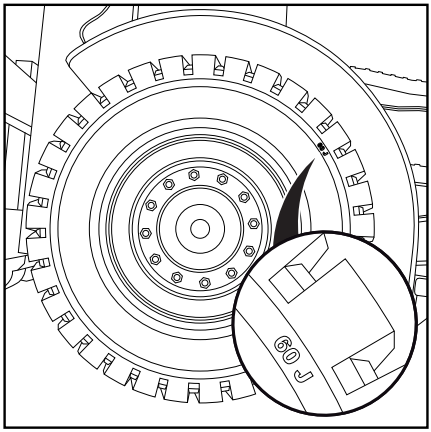

– Check the remaining distance between the tyre tread and the wear mark (60 J).

Superelastic tyres (variant) can be worn down to the wear mark (60 J).

– Remove any foreign bodies embedded in the tyre.

Pneumatic tyres (variant)

▷

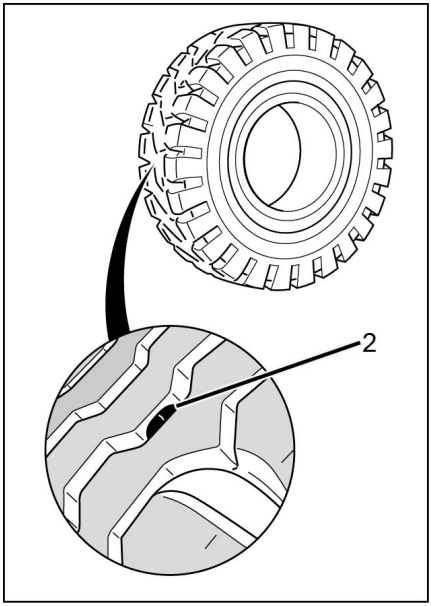

– Check the tread depth on all four tyres.

The tread depth for pneumatic tyres (variant) must be **at least 1.6 mm** at every point on the tread. If the tread is worn down to the wear mark (2) at any point on the tyre, replace the tires on one axle.

– Remove any foreign bodies embedded in the tyre.

Checking the air pressure

▷

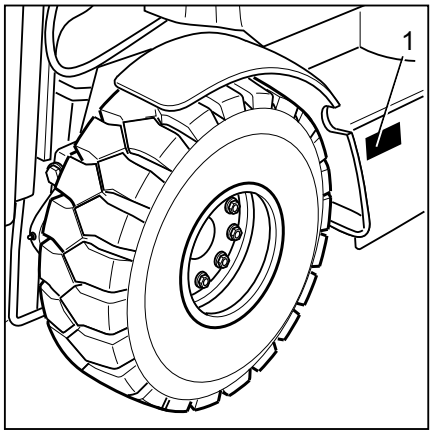

NOTE

The correct air pressure for pneumatic tyres (variant) is determined by the type of tyre used. The air pressure measured must correspond to the manufacturer's information.

- See the air pressure values stated on the adhesive label (1) on the truck.
- Check the air pressure of all four tyres and compare with the air pressure values stated on the adhesive labels.
- Add or release air as required if the air pressure deviates from the values stated.

Checking the wheel fastenings

▷

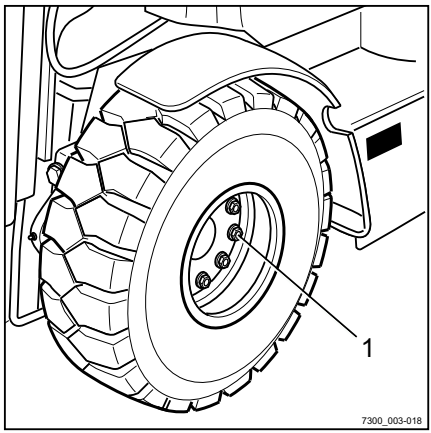

- Check that all wheel fastenings (1) are securely fastened and retighten as necessary.
- Observe the relevant torques; see section entitled "Maintenance data table".

Maintaining the battery

NOTE

Battery servicing is carried out in accordance with the battery manufacturer's operating manual.

⚠ WARNING

Risk of short circuit and explosion!

- Do not place any metal objects or tools on the battery.
- Keep away from naked flames and fire. Smoking is forbidden.

Checking the battery charge state

- Remove the rear cover.
- With maintenance-free batteries, check the charge state at the inspection window (1):

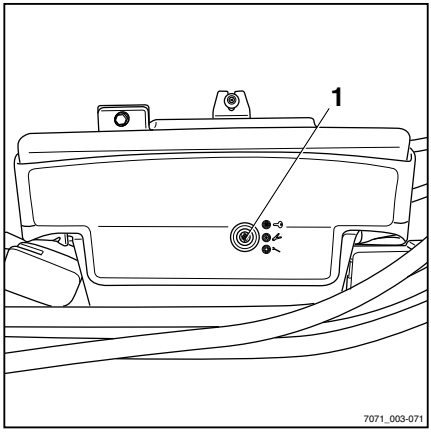

- **Green**
  The battery is fully charged.
- **Black**
  The charge state of the battery is no longer optimal. The battery must be recharged. After recharging, the indicator changes back to green.
- **Transparent (light-coloured)**
  The charge state is no longer sufficient to ensure reliable starting. The battery must be replaced.

Charging the battery

⚠ WARNING

The electrolyte (diluted sulphuric acid) is poisonous and corrosive!

- Observe the safety regulations for handling battery acid.
- Observe the safety information from the battery manufacturer.

- With batteries that are not maintenance-free, check the level of the battery acid.

The battery acid must come up to the lower edge of the insert in the battery housing or 5 mm above the upper edge of the plates.

⚠ CAUTION

The battery can be damaged!

- Only fill up missing fluid with distilled water.

– Unscrew the battery cell covers and check the acid density with an acid siphon. ▷

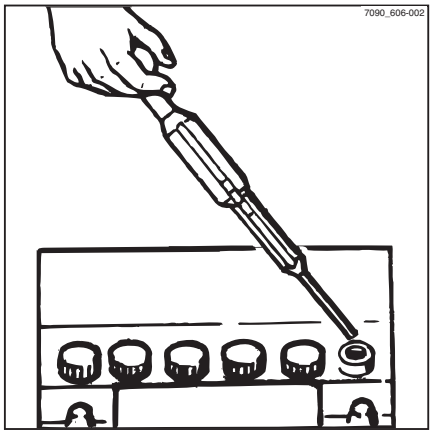

⚠ WARNING

Risk of explosion!

Charging releases gases that are explosive. During the charging process, the surface of the battery cells must be kept exposed to ensure sufficient ventilation.

– Expose the surface of the battery cells before charging the battery.
– Ensure effective ventilation during charging.
– Keep the engine compartment open during charging.
– Avoid the formation of sparks in the vicinity of the battery.

The acid density must reach the values in the table. The listed acid densities refer to an acid temperature of 27°C.

Charge state	Battery charge (%)	Acid density (kg/l)
Full	100%	approx. 1.28
Normal	75%	approx. 1.21
Weak	50%	approx. 1.16
Discharged	25%	approx. 1.13
Deep discharged	0-10%	< 1.06

NOTE

Temperature fluctuations can cause the measurement results to change. In the event of a difference in temperature of 35°C, the values deviate from each other by approx. 0.05 kg/l.

– Charge discharged batteries immediately until they are fully charged again.

The charging current shall not exceed 1/10 of capacity.

The cell covers of the batteries must be kept dry and clean.

Any spillage of battery acid must be neutralised immediately.

Terminals and cable shoes must be clean, lightly coated with battery grease and screwed on tightly.

– After charging, screw the battery cell covers back on.

– Reattach the covering on the back.

Replacing fuses

⚠ DANGER

Risk of fire!

Using the wrong fuses can result in short circuits.

– Use only fuses with the prescribed nominal current, see the section entitled "Fuse assignment".

– Remove the cover at the back.

– Open the cover fastenings (1) and remove the cover.

– Replace the defective fuse with one that is rated for the nominal current according to "Fuse assignment".

– Close the cover to secure the fuse box.

– Install the back covers.

– Perform a function check. If the error persists or if the fuse is still defective, notify your authorised service centre.

▷

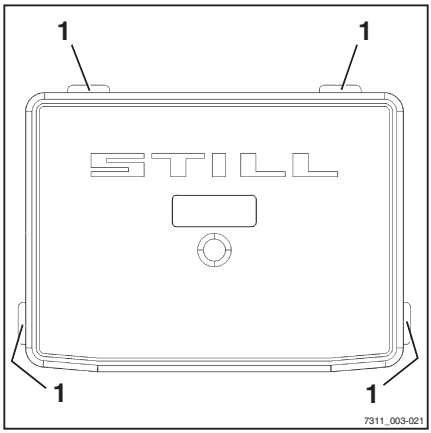

Checking the hydraulic system for leak tightness

⚠ WARNING

Risk of injury from hydraulic oil under pressure!

Hydraulic oil under pressure can escape from leaking pipes and lines and cause injuries.

– Before checking, release the pressure from the hydraulic system.

– Wear suitable protective gloves, protection goggles etc.

⚠ CAUTION

Hydraulic hoses become brittle over time!

– Do not store hydraulic hoses for more than two years.

– Do not use hydraulic hoses for more than two years if they are subject to a high level of wear.

– Comply with the specifications of "DGUV Rule 113-020" within Germany.

– Outside of Germany, observe the national regulations for the country of use.

– Check pipe and hose connection screw joints for leaks (traces of oil).

Replace hose lines if they display the following abnormalities:

- Outer layer has been damaged, or is brittle or cracked
- Leakages
- Deformation (e.g. with blisters or kinks)
- A fitting has come loose
- A fitting is badly damaged or corroded

Replace pipes if they display the following abnormalities:

- Abrasion
- Deformation and bending
- Leakages

Lubricating the lift mast and roller track ▷

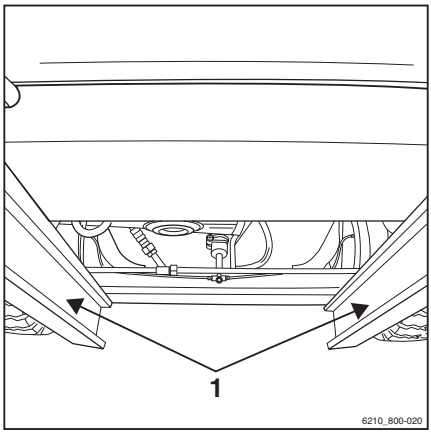

– Remove dirt and lubricant residue from the roller track.

– Lubricate the roller tracks (1) of the outside, middle, and inside mast with a super-pressure adhesion lubricant to reduce wear. See ⇒Chapter "Maintenance data table", Page 420 .

NOTE

Spray the roller track evenly from a distance of approx. 15-20 cm. Wait approx. 15 minutes until the equipment is ready to use again.

Greasing the automatic tow coupling

NOTE

Wear to moving parts can be significantly reduced by appropriate servicing and regular lubrication of the coupling.

– Avoid over-greasing!

NOTE

Close the coupling before cleaning with a high-pressure cleaner. After cleaning, lubricate the coupling pin, tow bar eye and its supporting surface again.

Model RO*243

- Pull out the safety handle (3).
- Push the hand lever (2) upwards.
- Grease using the lubricating nipple(1) in accordance with the maintenance data table; see ⇒Chapter "Maintenance data table", Page 420 .
- Close the coupling by raising the coupling pin with a suitable tool.
- For journeys with a rigid drawbar trailer, lubricate the underside of the tow bar eye and the supporting surface on the coupling.

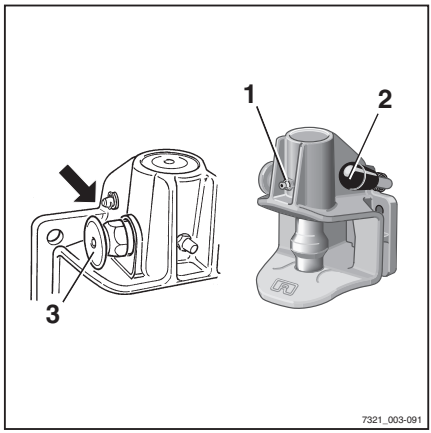

- Determine the wear on the coupling pin.

The diameter of the spherical part must not be less than 36.5 mm.

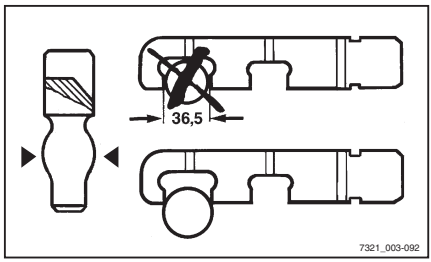

Model RO*244 A

- Open coupling.

- Grease using the lubricating nipple(1) in accordance with the maintenance data table; see ⇒Chapter "Maintenance data table", Page 420 .
- Grease coupling pin, tow bar eye and its supporting surface.

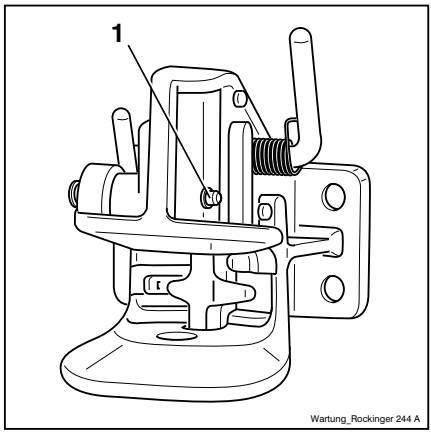

Model RO*245

▷

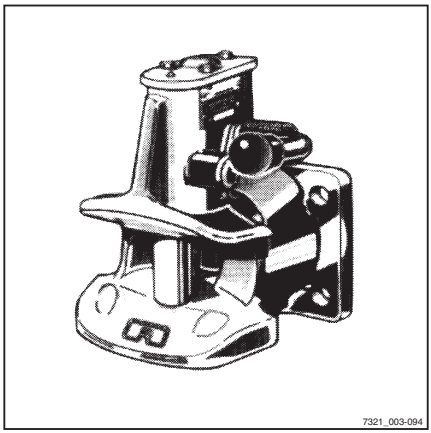

- Lubricate via the points provided for this purpose (lubricating nipple, opened coupling) in accordance with the maintenance data table; see ⇒Chapter "Maintenance data table", Page 420 .
- Grease the supporting surface for the towbar eye.

Model RO*841

▷

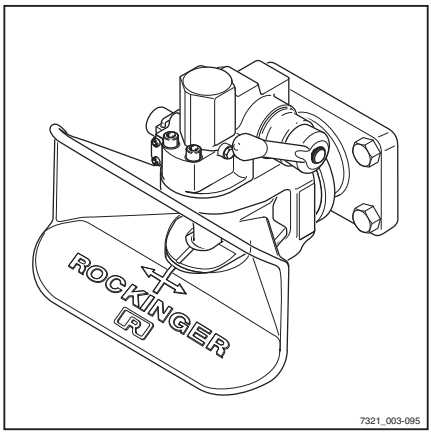

- Lubricate via the points provided for this purpose (lubricating nipple, opened coupling) in accordance with the maintenance data table; see ⇒Chapter "Maintenance data table", Page 420 .
- Grease the supporting surface for the towbar eye.

Check the hydraulic oil level

⚠ CAUTION

Hydraulic oils are hazardous to health and are pressurised during operation.

- Observe the safety regulations for working with hydraulic oils; see ⇒Chapter "Hydraulic fluid", Page 50 .

- Park the truck securely; see ⇒Chapter "Parking the truck securely and switching it off", Page 193 .

– Open the bonnet; see ⇒Chapter "Opening the bonnet", Page 423 .

– Unscrew the breather filter with the oil dipstick (1) in an anti-clockwise direction and remove.

The breather filter with the dipstick is located on the left-hand side of the truck chassis when viewed in the drive direction.

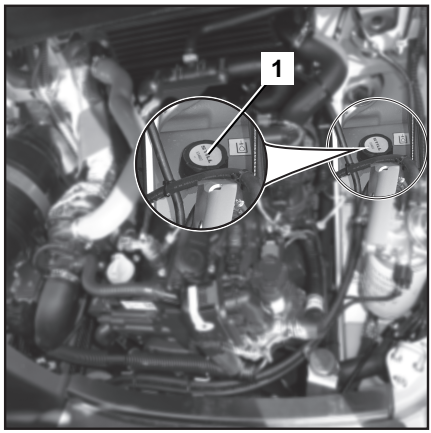

– Keep the dipstick in a horizontal position and check the oil level. The oil level must be at least up to the mark (2) on the dipstick.

– If the oil level does not reach the specified level, pour hydraulic oil of the corresponding specification (see ⇒Chapter "Maintenance data table", Page 420) into the filler neck until it reaches the upper marking as a maximum.

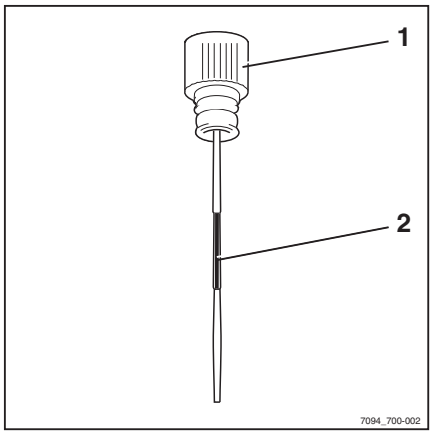

NOTE

Use a funnel.

– Screw in the breather filter with oil dipstick.

– Close bonnet again.

ENVIRONMENT NOTE

Carefully collect any spilled oil. Dispose of these substances in an environmentally friendly manner.

1000-hour maintenance/annual maintenance

Other work that must be carried out

– Perform all tasks required to maintain full operability; see the chapter entitled "Remaining ready for operation".

Checking the exhaust gas system

– Inspect the exhaust gas system for external damage, secure fit, and leaks.

Changing the LPG filter

⚠ DANGER

There is a risk of explosion if LPG escapes.

– Note safety regulations for working with LPG ⇒Chapter "LPG", Page 51 .

– Switch off the engine.

– For trucks with LPG cylinders, close the cylinder valve (1).

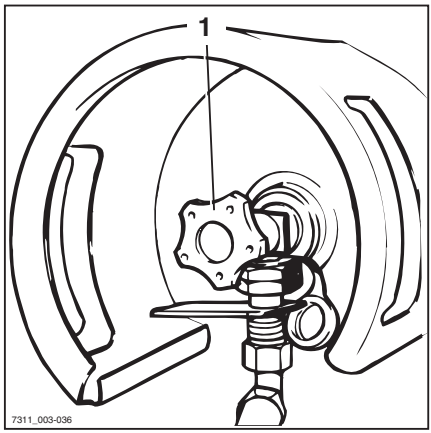

– For trucks with an LPG tank (variant), close the shut-off valve (2). ▷

– Open the bonnet; see ⇒Chapter "Opening the bonnet", Page 423 .

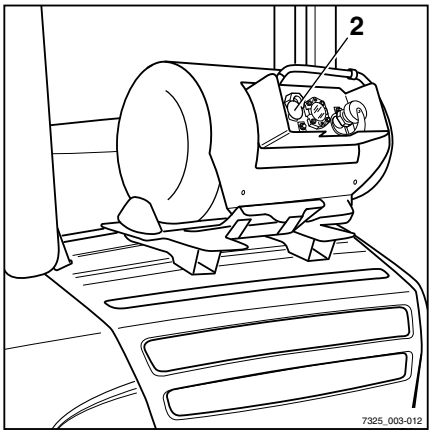

– Unscrew the mounting screw (3) on the filter housing. ▷

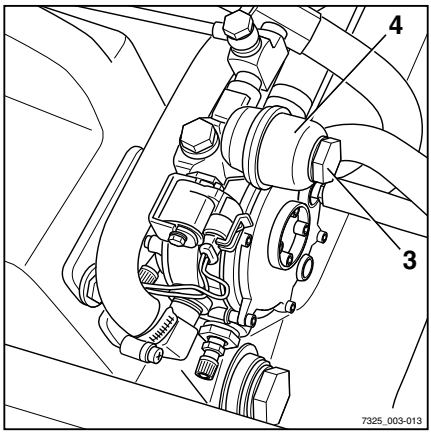

- Remove the filter housing (4).
- Remove the filter insert (5).
- Carefully remove any dirt inside the housing.
- Fit a new filter insert (5) with new sealing ring (6).

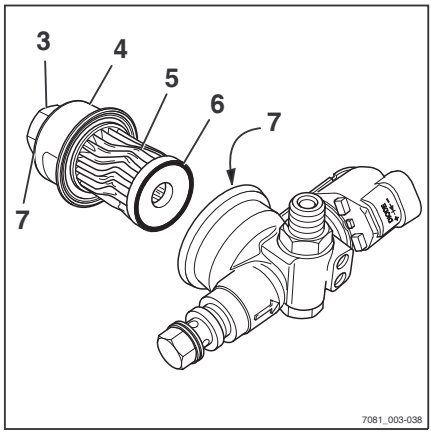

⚠ CAUTION

There may be a malfunction.

- Ensure that the sealing ring is properly seated in the recess of the filter insert and that the filter is correctly installed.

- Check the seals (7) for damage and change if necessary.
- Screw filter housing back on.
- Open the cylinder valve (1) or the shut-off valve (2).
- Check all connections for leakages using leak spray.
- Close the bonnet.

Checking the lift cylinders and connections for leaks

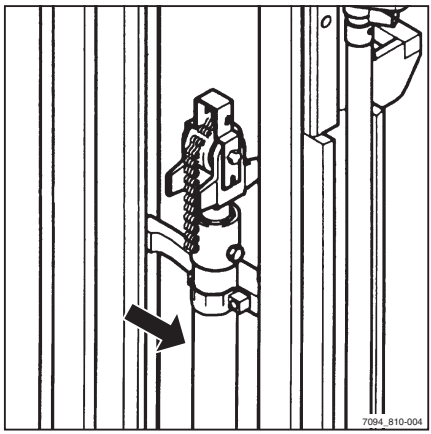

⚠ WARNING

Risk of injury

Observe safety regulations for working on the lift mast, see the "Working at the front of the truck" chapter.

- Check hydraulic connections and lift cylinders for leaks (visual inspection).
- Have leaking screw joints or leaking hydraulic cylinders repaired by the authorised service centre.

Checking the fork arms

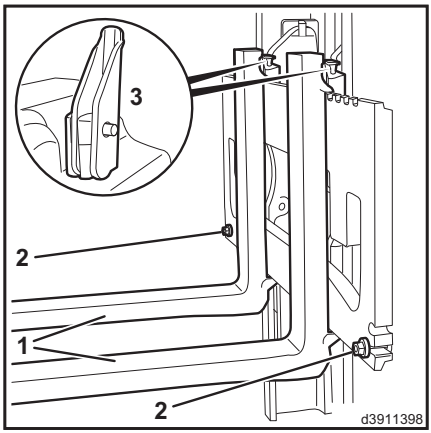

⚠ CAUTION

Fork arms must not be uneven!

– Always replace both fork arms.

– Check the fork arms (1) for visible deformation and excessive wear.

No cracks or deformations must be visible on the fork arms in the area around the fork bend. Wear must not amount to more than 10% of the original thickness.

– Check that the locking screws (2) are present and securely attached.

– Replace any worn or deformed fork arms.

Check the condition and correct operation of the fork latch:

– Move the locking lever (3) into a vertical position.

It must be possible to move the fork arm.

– Move the locking lever into a horizontal position.

The latch must engage in a recess on the fork carriage. It must not be possible to move the fork arm.

– Replace faulty fork latches.

Checking the reversible fork arms

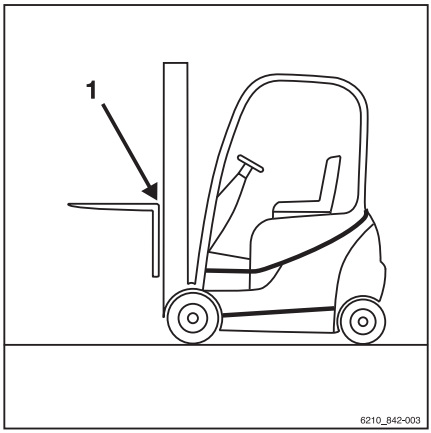

NOTE

This check is only required for reversible fork arms (variant).

– Check the outside of the fork bend (1) for cracks. Contact your service centre.

10-year maintenance

Checking the LPG tank (variant) ▷

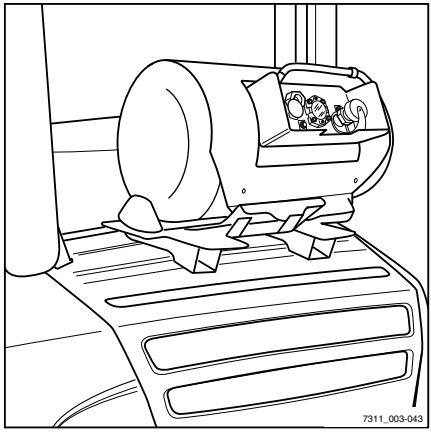

NOTE

LPG tanks are liquid gas containers. LPG tanks are pressure tanks that must be monitored and that are subject to specific testing and specific inspection intervals. The testing must be conducted only by an approved inspection body and by a competent person. In Germany, testing is conducted by TÜV, for example.

– Have the LPG tank tested by an approved inspection body and by a competent person.

– Observe the national regulations for the country in which the truck is being used.

6

Technical data

Dimensions

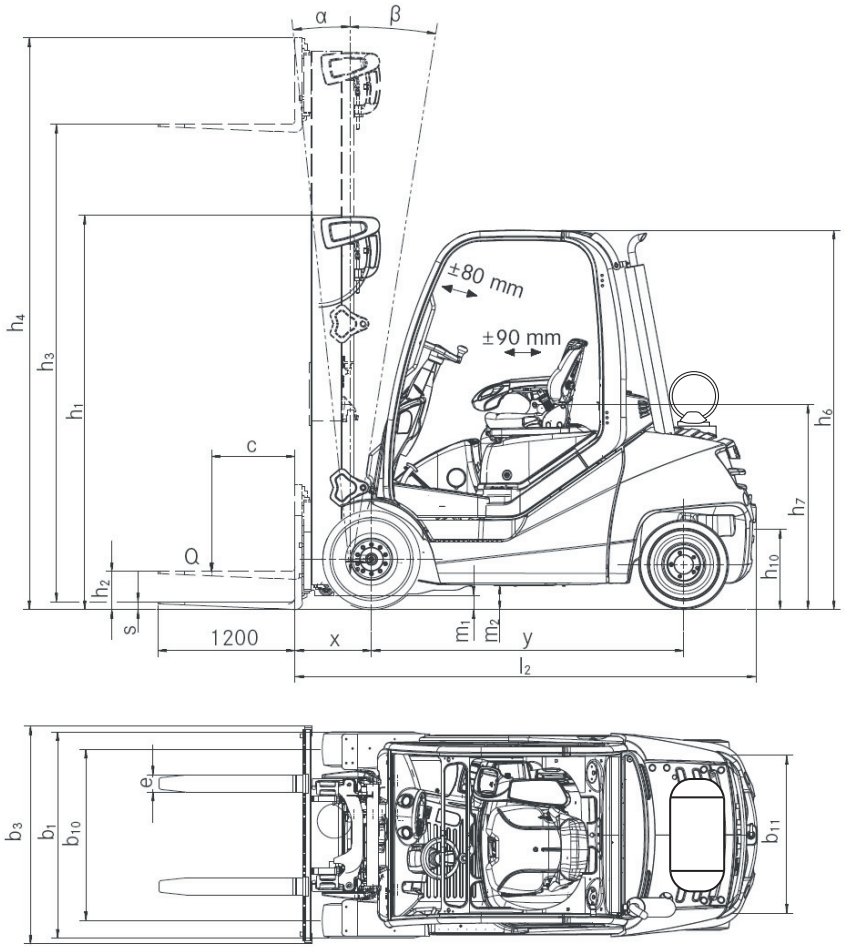

7306_003-002

- Steering column is adjustable ± 80 mm
- Seat is adjustable ± 90 mm
- Fork spacing is adjustable

NOTE

Measurements h_1, h_3, h_4, h_6 and b_1 are customised and can be taken from the order confirmation.

Centre of gravity "S" (distance measured from the front axle)

Model	Type	Distance (mm)
RX70-20/600	7400	927
RX70-25	7401	954
RX70-25/600	7402	954
RX70-30	7403	1003
RX70-30/600	7404	1003
RX70-35	7405	1068

NOTE

The specified centre of gravity "S" relates to trucks with standard equipment. If, for example, the truck is equipped with a different lift mast, attachment or driver protection structure, this value is only a guide value. If necessary, the centre of gravity "S" must be determined on an individual basis for each truck.

VDI datasheet for RX70-20/600 and RX70-25

NOTE

This VDI datasheet specifies only the technical values for trucks with standard equipment. Different tyres, lift masts, additional units etc. can produce different values.

Key data

Model		RX70-20/600	RX70-25
Type number		**7400**	**7401**
Manufacturer		STILL GmbH	STILL GmbH
Drive		LPG engine/ electrical	LPG engine/electrical
Operation		Seat	Seat
Load capacity / load	Q (kg)	2000	2500
Load centre of gravity	c (mm)	600	500
Load distance	x (mm)	459	459
Wheelbase	y (mm)	1760	1760

Weights

Model		RX70-20/600	RX70-25
Type number		**7400**	**7401**
Net weight	kg	3834	3834
Front axle load, laden	kg	4993	5652
Rear axle load, laden	kg	841	682
Front axle load, unladen	kg	1790	1790
Rear axle load, unladen	kg	2044	2044

Wheels, chassis frame

Model		RX70-20/600	RX70-25
Type number		**7400**	**7401**
Tyres		SE	SE
Front tyre size		23x9-10	23x9-10
Rear tyre size		21x8-9	21x8-9

Model		RX70-20/600	RX70-25
Type number		**7400**	**7401**
Number of front wheels (x = driven)		2x	2x
Number of rear wheels (x = driven)		2	2
Track width, front	b10 (mm)	984	984
Track width, rear	b11 (mm)	920	920

Basic dimensions

Model		RX70-20/600	RX70-25
Type number		**7400**	**7401**
Tilt of lift mast/fork carriage, forwards	Degrees	6	6
Tilt of lift mast/fork carriage, backwards	Degrees	7	7
Height with lift mast retracted	h1 (mm)	2175	2175
Free lift	h2 (mm)	160	160
Lift height[1]	h3 (mm)	2970	2970
Height with lift mast extended	h4 (mm)	3600	3600
Height above overhead guard	h6 (mm)	2190	2190
Seat height	h7 (mm)	1074	1074
Coupling height	h10 (mm)	340 / 455	340 / 455
Overall length	l1 (mm)	3605	3605
Length including fork back	l2 (mm)	2605	2605
Overall width	b1 (mm)	1192	1192
Fork arm thickness	s (mm)	40	40
Fork arm width	e (mm)	100	100
Fork arm length	l (mm)	1000	1000
Fork carriage in acc. with ISO 2328, class / form		II / A	II / A
Fork carriage width	b3 (mm)	1150	1150
Ground clearance with load below lift mast	m1 (mm)	125	125
Ground clearance at the middle of the wheelbase	m2 (mm)	150	140
Aisle width for pallet 1000 x 1200 cross-wise	Ast (mm)	3963	3963
Aisle width for pallet 800 x 1200 length-wise	Ast (mm)	4163	4163

1 The specified lift takes into account the tyre deflection and the tolerances of the tyre diameter.

Model		RX70-20/600	RX70-25
Type number		**7400**	**7401**
Turning radius	Wa (mm)	2313	2313
Smallest pivot point distance	b13 (mm)	611	611

Performance data

Model		RX70-20/600	RX70-25
Type number		**7400**	**7401**
Driving speed with load	km/h	21	21
Driving speed without load	km/h	21	21
Lifting speed with load	m/s	0.53	0.53
Lifting speed without load	m/s	0.55	0.55
Lowering speed with load	m/s	0.60	0.60
Lowering speed without load	m/s	0.53	0.53
Pulling force with load	N	17,500	17,500
Pulling force without load	N	12,140	12,140
Climbing capability[2] with load	%	29	29
Climbing capability without load	%	26	26
Acceleration time with load	s	5.1	5.1
Acceleration time without load	s	4.5	4.5
Service brake		Electr./hydr.	Electr./hydr.

⚠ CAUTION

To use the truck safely—with or without a load—the maximum permitted ascending or descending gradient for travel is 15%.

– If you have any questions, contact your authorised service centre.

Engine

Model		RX70-20/600	RX70-25
Type number		**7400**	**7401**
Type of engine		P24	P24
Engine power rating in accordance with ISO 1585	kW	37	37

2 The stated values are used only to compare the performance of trucks in the same category. The gradient values in no way represent the normal daily operating conditions.

Model		RX70-20/600	RX70-25
Type number		**7400**	**7401**
Nominal speed	rpm	2600	2600
Number of cylinders		4	4
Displacement	cm^3	2400	2400
Fuel consumption[3] in accordance with EN 16796	kg/h	2.6	2.7
On-board power supply	V	12	12

Other

Model		RX70-20/600	RX70-25
Type number		**7400**	**7401**
Working pressure for attachments	bar	250	250
Oil flow for attachments	l/min	30	30
Capacity of fuel tank	l/kg	11	11
Sound pressure level L_{pAZ} (driver's compartment)[4]	dB (A)	< 77	< 77
Sound power level L_{wAZ} (working cycle)	dB (A)	99	99
Human vibration acceleration in accordance with EN 13059	m/s^2	0.58	0.58
Tow coupling, DIN type/model		Bolt	Bolt

3 With Blue-Q energy-saving programme

4 Without cab. Values are different with a cab.

VDI datasheet for RX70-25/600 and RX70-30

NOTE

This VDI datasheet specifies only the technical values for trucks with standard equipment. Different tyres, lift masts, additional units etc. can produce different values.

Key data

Model		RX70-25/600	RX70-30
Type number		**7402**	**7403**
Manufacturer		STILL GmbH	STILL GmbH
Drive		LPG engine/ electrical	LPG engine/electrical
Operation		Seat	Seat
Load capacity / load	Q (kg)	2500	3000
Load centre of gravity	c (mm)	600	500
Load distance	x (mm)	464	469
Wheelbase	y (mm)	1820	1820

Weights

Model		RX70-25/600	RX70-30
Type number		**7402**	**7403**
Net weight	kg	4135	4168
Front axle load, laden	kg	5788	6462
Rear axle load, laden	kg	847	706
Front axle load, unladen	kg	1827	1865
Rear axle load, unladen	kg	2308	2303

Wheels, chassis frame

Model		RX70-25/600	RX70-30
Type number		**7402**	**7403**
Tyres		SE	SE
Front tyre size		23x9-10	23x9-10
Rear tyre size		21x8-9	21x8-9

Model		RX70-25/600	RX70-30
Type number		**7402**	**7403**
Number of front wheels (x = driven)		2x	2x
Number of rear wheels (x = driven)		2	2
Track width, front	b10 (mm)	984	984
Track width, rear	b11 (mm)	920	920

Basic dimensions

Model		RX70-25/600	RX70-30
Type number		**7402**	**7403**
Tilt of lift mast/fork carriage, forwards	Degrees	6	6
Tilt of lift mast/fork carriage, backwards	Degrees	7	7
Height with lift mast retracted	h1 (mm)	2175	2175
Free lift	h2 (mm)	160	160
Lift height[5]	h3 (mm)	2970	2970
Height with lift mast extended	h4 (mm)	3750	3750
Height above overhead guard	h6 (mm)	2190	2190
Seat height	h7 (mm)	1074	1074
Coupling height	h10 (mm)	340 / 455	340 / 455
Overall length	l1 (mm)	3705	3705
Length including fork back	l2 (mm)	2705	2705
Overall width	b1 (mm)	1192	1192
Fork arm thickness	s (mm)	45	50
Fork arm width	e (mm)	100	100
Fork arm length	l (mm)	1000	1000
Fork carriage in acc. with ISO 2328, class / form		II / A	III / A
Fork carriage width	b3 (mm)	1150	1150
Ground clearance with load below lift mast	m1 (mm)	125	125
Ground clearance at the middle of the wheelbase	m2 (mm)	150	150
Aisle width for pallet 1000 x 1200 cross-wise	Ast (mm)	4047	4060
Aisle width for pallet 800 x 1200 length-wise	Ast (mm)	4247	4260

5 The specified lift takes into account the tyre deflection and the tolerances of the tyre diameter.

Model		RX70-25/600	RX70-30
Type number		**7402**	**7403**
Turning radius	Wa (mm)	2397	2397
Smallest pivot point distance	b13 (mm)	632	632

Performance data

Model		RX70-25/600	RX70-30
Type number		**7402**	**7403**
Driving speed with load	km/h	21	21
Driving speed without load	km/h	21	21
Lifting speed with load	m/s	0.53	0.48
Lifting speed without load	m/s	0.55	0.50
Lowering speed with load	m/s	0.60	0.60
Lowering speed without load	m/s	0.53	0.53
Pulling force with load	N	17,500	17,500
Pulling force without load	N	12,300	12,300
Climbing capability[6] with load	%	25	25
Climbing capability without load	%	24	24
Acceleration time with load	s	5.1	5.1
Acceleration time without load	s	4.5	4.5
Service brake		Electr./hydr.	Electr./hydr.

⚠ CAUTION

To use the truck safely—with or without a load—the maximum permitted ascending or descending gradient for travel is 15%.

– If you have any questions, contact your authorised service centre.

Engine

Model		RX70-25/600	RX70-30
Type number		**7402**	**7403**
Type of engine		P24	P24
Engine power rating in accordance with ISO 1585	kW	37	37

6 The stated values are used only to compare the performance of trucks in the same category. The gradient values in no way represent the normal daily operating conditions.

Model		RX70-25/600	RX70-30
Type number		**7402**	**7403**
Nominal speed	rpm	2600	2600
Number of cylinders		4	4
Displacement	cm^3	2400	2400
Fuel consumption[7] in accordance with EN 16796	kg/h	2.8	2.8
On-board power supply	V	12	12

Other

Model		RX70-25/600	RX70-30
Type number		**7402**	**7403**
Working pressure for attachments	bar	250	250
Oil flow for attachments	l/min	30	30
Capacity of fuel tank	l/kg	11	11
Sound pressure level L_{pAZ} (driver's compartment)[8]	dB (A)	< 77	< 77
Sound power level L_{wAZ} (working cycle)	dB (A)	99	99
Human vibration acceleration in accordance with EN 13059	m/s^2	0.58	0.58
Tow coupling, DIN type/model		Bolt	Bolt

7 With Blue-Q energy-saving programme

8 Without cab. Values are different with a cab.

VDI datasheet for RX70-30/600 and RX70-35

NOTE

This VDI datasheet specifies only the technical values for trucks with standard equipment. Different tyres, lift masts, additional units etc. can produce different values.

Key data

Model		RX70-30/600	RX70-35
Type number		**7404**	**7405**
Manufacturer		STILL GmbH	STILL GmbH
Drive		LPG engine/ electrical	LPG engine/electrical
Operation		Seat	Seat
Load capacity / load	Q (kg)	3000	3500
Load centre of gravity	c (mm)	600	500
Load distance	x (mm)	469	469
Wheelbase	y (mm)	1820	1820

Weights

Model		RX70-30/600	RX70-35
Type number		**7404**	**7405**
Net weight	kg	4460	4460
Front axle load, laden	kg	6652	7253
Rear axle load, laden	kg	808	707
Front axle load, unladen	kg	1890	1890
Rear axle load, unladen	kg	2570	2570

Wheels, chassis frame

Model		RX70-30/600	RX70-35
Type number		**7404**	**7405**
Tyres		SE	SE
Front tyre size		23x10-12	23x10-12
Rear tyre size		21x8-9	21x8-9

Model		RX70-30/600	RX70-35
Type number		**7404**	**7405**
Number of front wheels (x = driven)		2x	2x
Number of rear wheels (x = driven)		2	2
Track width, front	b10 (mm)	975	975
Track width, rear	b11 (mm)	920	920

Basic dimensions

Model		RX70-30/600	RX70-35
Type number		**7404**	**7405**
Tilt of lift mast/fork carriage, forwards	Degrees	6	6
Tilt of lift mast/fork carriage, backwards	Degrees	7	7
Height with lift mast retracted	h1 (mm)	2175	2175
Free lift	h2 (mm)	160	160
Lift height[9]	h3 (mm)	2970	2970
Height with lift mast extended	h4 (mm)	3750	3750
Height above overhead guard	h6 (mm)	2195	2195
Seat height	h7 (mm)	1074	1074
Coupling height	h10 (mm)	340 / 455	340 / 455
Overall length	l1 (mm)	3770	3770
Length including fork back	l2 (mm)	2770	2770
Overall width	b1 (mm)	1224	1224
Fork arm thickness	s (mm)	50	50
Fork arm width	e (mm)	100	100
Fork arm length	l (mm)	1000	1000
Fork carriage in acc. with ISO 2328, class / form		III / A	III / A
Fork carriage width	b3 (mm)	1150	1150
Ground clearance with load below lift mast	m1 (mm)	125	125
Ground clearance at the middle of the wheelbase	m2 (mm)	150	150
Aisle width for pallet 1000 x 1200 cross-wise	Ast (mm)	4127	4127
Aisle width for pallet 800 x 1200 length-wise	Ast (mm)	4352	4327

9 The specified lift takes into account the tyre deflection and the tolerances of the tyre diameter.

Model		RX70-30/600	RX70-35
Type number		**7404**	**7405**
Turning radius	Wa (mm)	2464	2464
Smallest pivot point distance	b13 (mm)	632	632

Performance data

Model		RX70-30/600	RX70-35
Type number		**7404**	**7405**
Driving speed with load	km/h	21	21
Driving speed without load	km/h	21	21
Lifting speed with load	m/s	0.48	0.48
Lifting speed without load	m/s	0.50	0.50
Lowering speed with load	m/s	0.60	0.60
Lowering speed without load	m/s	0.53	0.53
Pulling force with load	N	17,000	17,000
Pulling force without load	N	13,400	13,400
Climbing capability[10] with load	%	24	24
Climbing capability without load	%	20	20
Acceleration time with load	s	5.4	5.4
Acceleration time without load	s	4.8	4.8
Service brake		Electr./hydr.	Electr./hydr.

⚠ CAUTION

To use the truck safely—with or without a load—the maximum permitted ascending or descending gradient for travel is 15%.

– If you have any questions, contact your authorised service centre.

Engine

Model		RX70-30/600	RX70-35
Type number		**7404**	**7405**
Type of engine		P24	P24
Engine power rating in accordance with ISO 1585	kW	37	37

10 The stated values are used only to compare the performance of trucks in the same category. The gradient values in no way represent the normal daily operating conditions.

Model		RX70-30/600	RX70-35
Type number		**7404**	**7405**
Nominal speed	rpm	2600	2600
Number of cylinders		4	4
Displacement	cm^3	2400	2400
Fuel consumption[11] in accordance with EN 16796	kg/h	2.9	3.0
On-board power supply	V	12	12

Other

Model		RX70-30/600	RX70-35
Type number		**7404**	**7405**
Working pressure for attachments	bar	250	250
Oil flow for attachments	l/min	30	30
Capacity of fuel tank	l/kg	11	11
Sound pressure level L_{pAZ} (driver's compartment)[12]	dB (A)	< 77	< 77
Sound power level L_{wAZ} (working cycle)	dB (A)	99	99
Human vibration acceleration in accordance with EN 13059	m/s^2	0.58	0.58
Tow coupling, DIN type/model		Bolt	Bolt

11 With Blue-Q energy-saving programme

12 Without cab. Values are different with a cab.

Ergonomic dimensions

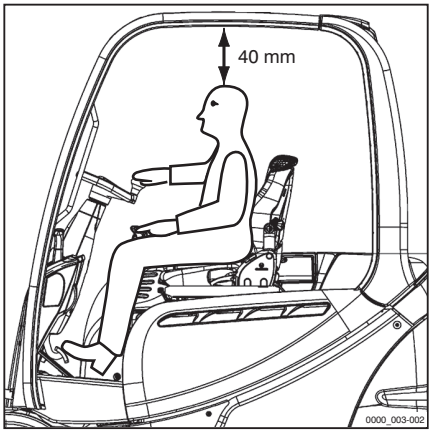

⚠ WARNING

Danger of impact injuries to the head!

If the head of the operator is located too close to the underside of the roof, the suspension of the driver's seat or an accident may cause the head to strike the overhead guard.

To avoid head injuries, a minimum distance of **40 mm** must be ensured between the underside of the roof and the head of the tallest operator.

To determine the actual head clearance, the operator must sit in the driver's seat and the seat suspension must be set to this driver's requirements.

Due to the individual nature of height and body weight as well as the wide variety of types of driver's seat and overhead guard, the minimum head clearance must be ensured in every truck.

The driver's compartment has been designed taking ergonomics in the workplace into account and in accordance with EN ISO 3411. In general, from the seat position, the operator has sufficient space to reach the operating devices safely, to operate the truck and to view the outline of the truck. Operators whose body size deviates from the specified dimensions on which EN ISO 3411 is based must be individually considered by the operating company.

Fuse assignment

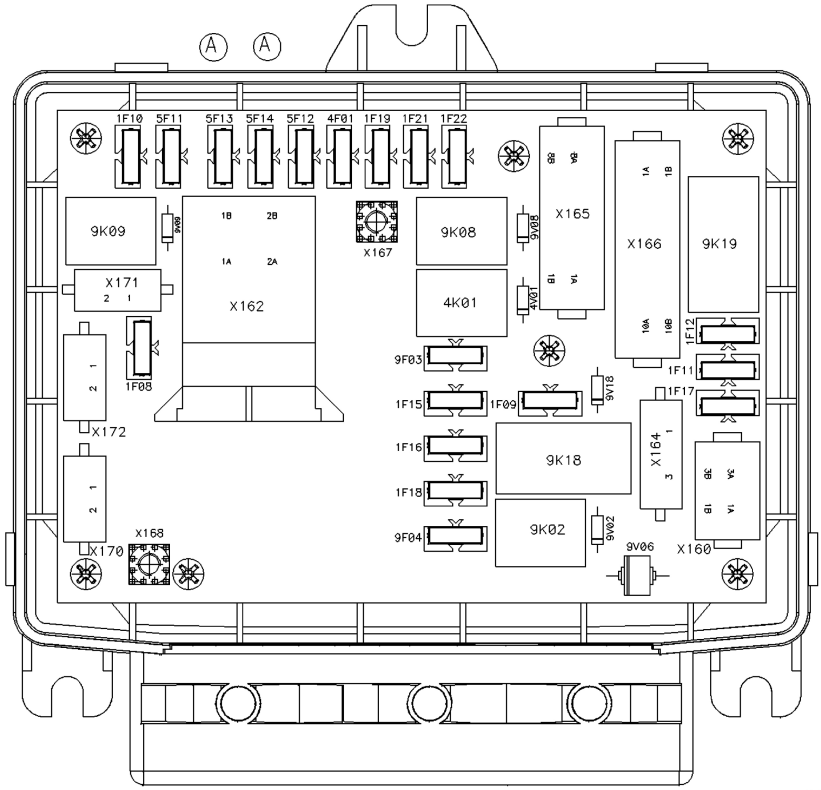

1F08 MMS, 10 A
1F09 Switch lock, terminal 30, 10 A
1F10 Engine control unit ECU, terminal 15, Doosan diagnostics, fuel priming pump, 10 A
1F11 Converter, 10 A
1F12 Converter for coolant pump/coolant fan, 15 A
1F15 MCU3 hazard warning lights, MCU3 Vers, 10 A
1F16 MCU3 servo hydraulics, 10 A
1F17 MCU3 time-delay relay, 10 A
1F18 Res. CPP4, 10 A
1F19 Relay for glow plug, 10 A
1F21 Level sensor for engine oil, 10 A
1F22 ECU K01, ECU K03, ECU K05, 15 A
4F01 Signal horn, 10 A
5F11 CAN power port 1 (CPP 1), roof top, 30 A
5F12 CAN power port 5 (CPP 5), roof bottom, 20 A
5F13 CAN power port 3 (CPP 3), driver's seat, wiper, 30 A
5F14 Electric parking brake, 30 A
9F03 SAE 12-V socket, 10 A
9F04 Starter motor, terminal 50, 30 A
9F07 Relay for glow plug monitor, 10 A
F1 Air-conditioning condenser, 20 A
F2 Air-conditioning compressor/evaporator, 25 A

Additional fuses

In this truck, additional fuses are located on a fuse holder to the left of the fuse box on the starter battery.

NOTE

Depending on the equipment, not all fuses will be present in the truck.

▷

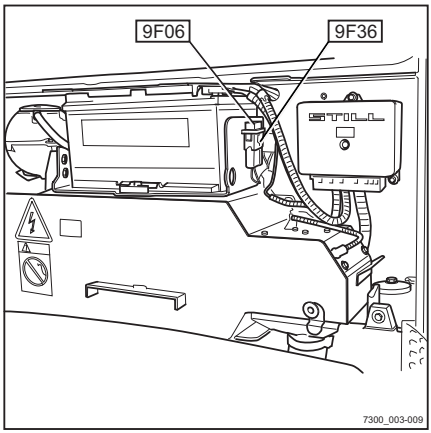

9F06 Sheathed-element heater plug (only on diesel trucks), 25 A
9F36 12 V socket, 10 A

Numbers and Symbols

12 V socket. 348

A

Access authorisation for the fleet manager. 135
Changing the fleet manager password. 137
Changing the PIN code for the driver. 134
Access authorisation with PIN code. . . . 133
Changing the PIN codes. 134
Accessories. 7
Actuating the drive direction switch
Fingertip version. 165
Joystick 4Plus version. 164
Mini-console version. 165
Mini-lever version. 164
Address of manufacturer. I
Adjusting the armrest. 97
Adjusting the fork. 225
After washing. 384
Air conditioning. 345
Aisle widths. 157
Assistance systems
Zeroing. 293
Attachments
Adjusting the hydraulic speed. 304
Alternating operation. 297
Attachment example. 303
Connection. 298
Controlling using a double mini-lever. 307
Controlling using a quadruple mini-lever. 315
Controlling using a triple mini-lever. . 311
Controlling using the double mini-lever and the 5th function. 309
Controlling using the joystick 4Plus. . 319
Controlling using the quadruple mini-lever and the 5th function. 317
Controlling using the triple mini-lever and the 5th function. 313
Controlling with Joystick 4Plus and the 5th function. 320
Controlling with the fingertip. 321
Controlling with the fingertip and the 5th function. 323
Depressurising the connections. 299
Fitting. 296
General controlling. 302
Load capacity. 298
Load pick up. 325
Mounting. 298
Safety information. 296
Special risks. 37
Automatic mast vertical positioning
Calibrating. 274
Checking for correct function. . . . 88, 274
Operation. 196, 272
Automatic tow coupling. 352
Coupling RO*243. 354
Coupling RO*244 A. 356
Coupling RO*245. 358
Coupling RO*841. 359
Uncoupling RO*243. 355
Uncoupling RO*244 A. 357
Uncoupling RO*245. 359
Uncoupling RO*841. 360

B

Basic principles for safe operation. 29
Battery
Charging. 444
Checking the charge state. 444
Disposal. 24
Maintaining. 443
Battery acid. 51
Before picking up a load
Capacity rating plate. 219
Blue-Q
Functional description. 150
Switching off additional consumers. . 152
Switching on and off. 151
Bonnet, closing. 425
Bonnet, opening. 423
Bottom plate
Installing. 429
Removing. 428

C

Cab
Operating the rear window heating. . . 338
Turning the interior lighting on or off. . 338
Cab door, closing. 336
Cab door, opening. 335
Capacity rating plate. 219

Ceiling sensor. 329
Changes to the truck. 29
Changing the fork arms. 213
Changing the LPG cylinder. 370
Double-cylinder holder. 373
Changing the LPG filter. 453
Checking the coolant concentration. 434
Checking the door latch. 441
Checking the driver's seat. 440
Checking the engine oil level. 431
Checking the exhaust gas system. 453
Checking the fork arms. 456
Checking the lift cylinders and connections for leaks. 455
Check the cooling fluid level. 433
Clamp locking mechanism. 324
Releasing the mechanism with a double mini-lever. 308
Releasing the mechanism with a quadruple mini-lever. 316
Releasing the mechanism with a triple mini-lever. 312
Releasing the mechanism with the fingertip. 322
Cleaning. 381
Cleaning the dust valve. 432
Cleaning the electrical system. 383
Cleaning the windows. 384
Climbing in the truck. 81
Climbing out of the truck. 81
Clipboard. 346
Condition of the roadways. 159
Conformity marking. 5
Consumables. 48
Coolant and cooling fluid safety information. 55
Disposal. 56
Safety information for handling battery acid. 51
Safety information for handling oils. . . 48
Safety information for hydraulic fluid. . 50
Safety information for LPG. 51
Contact details. I
Coolant. 434
Coolant and cooling fluid. 55
Cooling fluid
Topping up. 434
Copyright and trademark rights. 19
Crane loading. 398
Cruise control. 189
Cup holders. 64

D

Damage. 32
Danger area. 225
Danger to employees. 42
De-icing the evaporator. 186
Declaration of conformity. 6
Defects. 32
Definition of directions. 20
Determining visibility conditions when driving with a load. 233
Dimensions. 460
Display-operating unit
Main display. 132
Messages. 362
Display/control unit. 65
Disposal
Battery. 24
Components. 24
Double mini-lever
Lifting/lowering the fork carriage. 203, 204
Tilting the lift mast. 203, 205
Drive direction
Changing. 167
Neutral position. 163
Selecting. 163
Selecting with the dual pedal version. 169
Drive modes
Sprint mode. 153
STILL Classic. 153
Drive programme
Configuring A/B. 161
Selecting 1 to 3. 160
Selecting A/B. 161
Driver profiles
Creating. 119
Deleting. 124
Description. 117
Renaming. 121
Selecting. 117
Driver rights, duties and rules of behaviour. 27
Drivers. 27
Driver's cab. 83

Driver's compartment. 63
Driving. 155
Ascending gradients. 236
Descending gradients. 236
Driving lights
Switching on and off. 142
Driving on lifts. 241
Driving on loading bridges. 242
Due date counter for maintenance and safety checks. 411
Dynamic Load Control 1. 279
Dynamic Load Control 2. 280

E

easy Target. 247
Configuring. 248
Defining the lift heights by approaching. 250
Defining the lift heights by entering them. 248
Operating. 251
Placing the load in stock. 252
Removing the load from stock. 254
EC declaration of conformity in accordance with the Machinery Directive. 6
Electrical fork wear protection. 269
Electric parking brake
Symbols in the display-operating unit. 172
Emergencies
Disconnecting the battery. 390
Emergency operation of the parking brake. 388
Truck tipping over. 385
Using the emergency hammer. 385
Emergency drive direction. 394
Emergency driving. 394
Emergency hammer. 385
Emergency lowering. 386
Emissions. 57
Exhaust gases. 59
Heat. 59
Noise emissions. 57
Radiation. 60
Vibrations. 58
Engine
Automatic shut-off function. 185
Preheating (variant). 126
Starting. 138
Engine preheating. 126
Function. 126
Preheating. 126
Environmental considerations. 24
Ergonomic dimensions. 474

F

Filling the washer system. 328, 432
Fingertip
Lifting/lowering the fork carriage. 210
Tilting the lift mast. 211
Fitting attachments. 296
FleetManager. 328
Shock recognition. 328
Foreword. 0
Fork arms
Length. 34
Fork extension. 215
Fork wear protection. 212
Function checking. 78
Fuse assignment. 475

G

Gas spring with prop (variant)
Releasing the latch. 425
General. 4

H

Handling gas springs and accumulators. . 34
Handling loads. 219
Hazardous areas. 159
Hazards and countermeasures. 40
Hazard warning system
Switching on and off. 146
Heating system. 342
Hydraulic blocking function. 200
Releasing. 200
Hydraulic fluid. 50
Hydraulic system
Checking for leak tightness. 447
Checking the oil level. 450
Depressurising. 299

I

Improper use. 14
Information about the documentation. . . . 17
Information for carrying out maintenance. 409
Maintenance timeframe. 410
Insulation testing. 46
Insurance cover on company premises. . . 29
Intended use. 14
Interior lighting. 338

J

Jacking up. 407
Joystick 4Plus. 73
Fork carriage sideshift. 209
Lifting/lowering the fork carriage. 208
Tilting the lift mast. 208
Jump-starting. 391

L

Labelling points
Overview. 8
Lashing down. 397
Lift height-dependent assistance systems
Electrical fork wear protection. 269
End lift cut-out. 261
Lift mast end-stop damping. 260
Lift transition damping. 260
Speed reduction when the fork carriage is raised. 181, 264
Lift height-dependent functions
Intermediate lift cut-out. 255
Lift height display. 247
Lift height measuring system. 243
Cleaning. 244
Design and function. 243
Eliminating malfunctions. 245
Emergency operation in the event of malfunctions. 246
Lift height preselection
easy Target. 247
Lifting. 196, 407
Lifting system
Controlling using a double mini-lever. 202
Controlling using a quadruple mini-lever. 206
Controlling using a triple mini-lever. . 204
Controlling using the joystick 4Plus. . 207
Controlling with the fingertip. 210
Operating devices. 201
Lift mast
Lubricating the roller track. 448
Removing. 408
Securing against falling off. 408
Securing against tilting backwards. . . 408
Lift mast versions
Hi-Lo lift mast. 198
Triplex lift mast. 199
Lighting
Meaning of the symbols. 141
Retrofitting. 141
STILL SafetyLight®. 148
Still Safety Light® 4Plus. 148
StVZO equipment. 147
List of abbreviations. 21
Load
Picking up. 228
Setting down. 234
Transporting. 232
Load-dependant assistance systems
Load measurement. 283
Overload detection. 277
Precision load measurement. 286
Total load. 290
Load-dependent assistance systems
Dynamic Load Control 1. 279
Dynamic Load Control 2. 280
Tare function. 288
Load chains
Cleaning. 383
Load measurement. 283
Calibrating. 284
Load programs
Selecting 1 to 3. 211
LPG. 51
LPG tank (variant)
Checking. 457
Filling. 376
Opening the shut-off valve. 130
Lubricating the joints and controls. 438

M

Main display. 132

Maintenance. 0
10-year. 457
1000 hours. 453
After the first 50 operating hours. . . . 430
General information. 409
Yearly. 453
Maintenance data table. 420
Actuators/joints. 420
Air conditioning. 422
Battery. 420
Brake system. 422
Cooling system. 422
Drive axle. 421
Electrical system. 420
Engine. 422
General lubrication points. 420
Hydraulic system. 420
Lift mast. 421
Load chains. 421
LPG cylinder. 422
Steering axle. 421
Tyres. 420
Washer system. 422
Maintenance during the break-in period. 430
Maintenance work without special qualifications. 409
Malfunctions during lifting mode. 199
Malfunctions in the parking brake. 175
Manual tow coupling. 350
Coupling. 350
Uncoupling. 351
Mast tilt angle display. 272
Measuring the insulation resistance of the electrical system. 46
Medical equipment. 33
Messages
about operation. 363
about the truck. 368
Introduction. 362
Misuse of safety systems. 32
MSG 65 and MSG 75 driver's seat
Adjusting. 91
Adjusting the backrest extension. 95
Adjusting the longitudinal horizontal suspension. 94, 98
Adjusting the lumbar support. 94
Adjusting the seat backrest. 92
Adjusting the seat suspension (MSG 65/MSG 75). 93
Moving. 92
Switching the seat heater on and off. . 95
Swivelling for reverse travel. 96

N

Nameplate. 12
Neutral position. 163

O

Oils. 48
Opening the LPG cylinder valve. 127
Double-cylinder holder. 128
Operating company. 26
Operating devices and display elements. . 65
Operating devices for hydraulic and driving functions. 66
Double mini-lever. 67
Fingertip. 74
Quadruple mini-lever. 71
Triple mini-lever. 69
Operating instructions
Issue date. 19
Operating materials
Quality and quantity. 418
Operating procedures. 21
Operating the service brake. 170
Operating the signal horn. 83
Operation. 0
Ordering spare parts and wearing parts. 417
Overhead guard
Drilling. 30
Roof loads. 30
Welding. 30
Overview
Truck. 62
Overviews. 0
Display/control unit. 65
Driver's compartment. 63

P

Packaging. 24
Parking brake. 171
Actuation when the truck is in motion. 174
Actuation when the truck is stationary. 172
Emergency operation. 388

Malfunctions. 175
Parking the vehicle safely. 176
Parking the truck securely. 193
Personnel qualifications. 409
Picking up loads. 224
Place of use. 15
Pre-Shift Check
All questions. 105
Description. 103
History. 108
Process. 104
Question sequence. 106
Shift start. 110
Truck restrictions. 114
Precision load measurement. 286
Procedure if truck tips over. 385
Prohibition of use by unauthorised persons. 28
Push-up roof window. 346

Q

Quadruple mini-lever
Lifting/lowering the fork carriage. 206
Tilting the lift mast. 207

R

Radiator
Checking for leak tightness. 433
Cleaning. 433
Radio. 339
Radio with Bluetooth interface. 340
Rear cover
Attaching. 427
Removing. 427
Rear window heating
Switching on and off. 338
Refuelling. 370
Regular inspections. 44
Replacing fuses. 446
Replacing the air filter cartridges. 436
Residual dangers. 36
Residual risk. 36
Residual risks. 36
Retrofitting. 29
Retrofitting lighting equipment. 141
Reversible fork arm
Checking. 456
Reversible fork arms. 217
Roadways. 157, 159
Dimensions of aisle widths. 157
Dimensions of roadways. 157
Gradients. 157
Rotating beacon
Switching on and off. 148
Rules for roadways and the working area. 159

S

Safety. 0
Safety devices. 407
Safety inspection. 44
Safety regulations
Consumables. 48
Safety regulations for maintenance
General information. 404
Safety devices. 407
Set values. 407
Working on the electrical equipment. 405
Working on the hydraulic equipment. 404
Working on the ignition system. 405
Working on the LPG system. 406
Safety regulations for working on the lift mast. 407
Safety regulations when driving. 155
Safety regulations when handing loads. . 219
Safety tests. 44
Schematic views. 21
Scope of the documentation. 17
CO solutions. 18
Seat belt. 99
Checking. 439
Cleaning. 440
Fastening. 99
Fastening on a steep slope. 101
Maintaining. 439
Malfunction due to cold. 102
Replacement after an accident. 440
Unlocking. 101
Serial number. 12
Set values. 407
Shake function. 237
Double mini-lever. 239
Fingertip switch. 240
Joystick 4Plus. 239
Quadruple mini-lever. 240
Triple mini-lever. 240

Shelves. 64
Shock recognition. 328
Short-term operation. 399
Shutting down the truck. 400
Side windows, closing. 337
Side windows, opening. 337
Signal terms. 20
Spare parts list. II
Special risks. 37
Sprint mode
Automatic switch off. 153
Switching on and off. 153
Stability. 37
Starting drive mode. 165
Dual pedal version. 168
Steering. 180
Steering system
Checking for correct function. 88
STILL neXXt fleet. 329
Storing the truck. 400
StVZO (Road Traffic Licensing Regulations) information. 13
Switching off the truck. 193
Switching on the key switch. 132

T

Tare function. 288
Technical data. 0
Dimensions. 460
Tilt-angle-dependent assistance systems
Automatic mast vertical positioning. . 196, 272
Tilt angle-dependent assistance systems
Mast tilt angle display. 272
Tilt end stop damping. 272
Tilt end stop damping. 272
Total load. 290
Towed load. 349
Towing. 392
Proper use. 14
Trailer operation. 349
Trailers
Towing. 360
Transporting. 396
Transporting pallets. 226
Transporting suspended loads. 227
Travel direction selector and indicator module. 75
Turn indicators
Switching on and off. 144
Types of lift mast. 198
Telescopic mast. 198
Tyres
Safety principles. 32

U

Using after storage or decommissioning. 401
Using the truck. 14
Using working platforms. 16

V

Variant
Ceiling sensor. 329
Variants
Access authorisation for the fleet manager. 135
Access authorisation with PIN code. . 133
Air conditioning. 345
Automatic mast vertical positioning. . 88, 196, 272, 274
Checking the LPG tank. 457
Clamp locking mechanism. 324
Clipboard. 346
Cruise control. 189
Driver profiles. 117
Dynamic Load Control 1. 279
Dynamic Load Control 2. 280
easy Target. 247
Electrical fork wear protection. 269
End lift cut-out. 261
Engine automatic shut-off function. . . 185
Engine preheating. 126
Filling the LPG tank. 376
FleetManager. 328
Fork extension. 215
Fork wear protection. 212
Gas spring with prop. 425
Heating system. 342
Hi-Lo lift mast. 198
Interior lighting. 338
Intermediate lift cut-out. 255
Lift height display. 247
Lifting systems. 196
Lift mast end-stop damping. 260

Lift transition damping. 260
Load measurement. 283
Mast tilt angle display. 272
Opening the shut-off valve of an LPG tank. 130
Optical lift height measuring system. . 243
Overload detection. 277
Pre-Shift Check. 103
Precision load measurement. 286
Push-up roof window. 346
Radio. 339
Radio with Bluetooth interface. 340
Reversible fork arms. 217
Shake function. 237
Shock recognition. 328
Speed reduction when the fork carriage is raised. 181, 264
STILL neXXt fleet. 329
STILL SafetyLight® and STILL Safety-Light 4Plus®. 148
Tare function. 288
Tilt end stop damping. 272
Total load. 290
Travel direction selector and indicator module. 75
Triplex lift mast. 199
Wheel chock. 195
Windscreen wipers and washers. . . . 326
Zero braking. 171
VDI datasheet
RX70-20/600. 462
RX70-25. 462
RX70-25/600. 466
RX70-30. 466
RX70-30/600. 470
RX70-35. 470
View of functions and operating procedures. 21
View of operating procedures. 21
Views of the display and operating unit. . . 21
Visual inspections. 78

W

Warning regarding non-original parts. . . . 31
Wedging the wheels. 397
Wheel chock. 195
Wheel fastenings, checking. 443
Wheels and tyres
Checking the air pressure. 443
Checking the condition and wear of the tyres. 442
Checking the wheel fastenings. 443
Maintaining. 441
Windscreen wipers and washers
Switching on and off. 326
Working at the front of the truck. 407
Working on the electrical equipment. . . . 405
Working on the hydraulic equipment. . . . 404
Working on the ignition system. 405
Working on the LPG system. 406
Working spotlight for reverse travel
Switching on and off. 144
Working spotlights
Switching on and off. 143

Y

Your truck. 2

Z

Zeroing the assistance systems. 293

STILL GmbH

57378011501 EN - 12/2023 - 09