Original instructions

Electric truck

RXE 10-16C

5510 5513 5515 5516

55048015301 EN - 07/2024 - 08

first in intralogistics

Address of manufacturer and contact details ▷

STILL GmbH
Berzeliusstraße 10
22113 Hamburg, Germany
Telephone: +49 (0) 40 7339-0
Fax: +49 (0) 40 7339-1622
Email: info@still.de
Website: www.still.de

Rules for the operating company of industrial trucks

In addition to these operating instructions, a code of practice containing additional information for the operating companies of industrial trucks is also available.

This guide provides information for handling industrial trucks:

- Information on how to select suitable industrial trucks for a particular area of application
- Prerequisites for the safe operation of industrial trucks
- Information on the use of industrial trucks
- Information on transport, initial commissioning and storage of industrial trucks

Internet address and QR code ▷

The information can be accessed at any time by pasting the address **https://m.still.de/vdma** in a web browser or by scanning the QR code.

Spare parts list

You can request to download the spare parts list by copying and pasting the address **https://sparepartlist.still.eu** into a web browser or by scanning the QR code shown to the side.

On the web page, enter the following password: **Spareparts24!**

On the next screen, enter your email address and truck serial number to receive an email with the link and download the spare parts list.

2511

1 Foreword

Your truck . . . 2
Description of the truck . . . 2
General . . . 5
Conformity marking . . . 6
Declaration that reflects the content of the declaration of conformity . . . 7
Accessories . . . 8
Labelling points . . . 10
Nameplate . . . 11
Serial number . . . 12
StVZO (Road Traffic Licensing Regulations) information . . . 13

Using the truck . . . 14
Commissioning . . . 14
Intended use . . . 14
Improper use . . . 14
Place of use . . . 15
Parking in temperatures below -10 °C . . . 16
Using working platforms . . . 17

Information about the documentation . . . 18
Scope of the documentation . . . 18
Supplementary documentation . . . 19
Issue date and topicality of the operating instructions . . . 20
Copyright and trademark rights . . . 20
Explanation of signal terms used . . . 21
List of abbreviations . . . 21
Definition of directions . . . 23
Schematic views . . . 24

Environmental considerations . . . 25
Packaging . . . 25
Disposal of components and batteries . . . 25

2 Safety

Definition of responsible persons . . . 28
Operating company . . . 28
Specialist . . . 28
Drivers . . . 29

Basic principles for safe operation . . . 31
Insurance cover on company premises . . . 31
Modifying and retrofitting . . . 31
Changes to the overhead guard and roof loads . . . 33

Warning regarding non-original parts . . . 33
Damage, defects and misuse of safety systems . . . 34
Tyres . . . 35
Medical equipment . . . 36
Exercise caution when handling gas springs and accumulators . . . 36
Length of the fork arms . . . 37

Residual risk . . . 38
Residual dangers, residual risks . . . 38
Special risks associated with using the truck and attachments . . . 39
Overview of hazards and countermeasures . . . 42
Danger to employees . . . 44

Safety tests . . . 46
Carrying out regular inspections on the truck . . . 46
Insulation testing . . . 46
Regularly testing the electrical safety . . . 48

Safety regulations for handling consumables . . . 49
Permissible consumables . . . 49
Oils . . . 49
Hydraulic fluid . . . 50
Battery acid . . . 51
Brake fluid . . . 52
Disposal of consumables . . . 54

Emissions . . . 55

3 Overviews

Overview . . . 60

Driver's compartment . . . 62

Shelf and cup holder . . . 63

Operating devices and display elements . . . 64
Display-operating unit "STILL Easy Control" . . . 64
Emergency off switch . . . 65
Multi-lever operation . . . 66
Double mini-lever . . . 67
Triple mini-lever . . . 67
Quadruple mini-lever . . . 71
Fingertip . . . 73
Joystick 4Plus . . . 74
Travel direction selector and indicator module (variant) . . . 75

4 Operation

Checks and tasks before daily use 78
Visual inspections and function checking 78
Climbing into and out of the truck 82
Adjusting the driver's seat and armrest 83
Function checking of the assistance systems 83
Unlock the emergency off switch. 85
Checking the emergency off function 85
Operating the signal horn 86
Driver's cab 87
Checking the brake system for correct function 88
Warming up the hydraulic oil at cold ambient temperatures 90
Checking the steering system for correct function. 91

Driver's seat 92
Adjusting the MSG 65 and MSG 75 driver's seat 92
Seat belt 97
Adjusting the armrest. 100

Switching on 101
Switching on using the key switch 101
Switching on via push button (variant). 102

Display-operating unit 104
Operating the display-operating unit 104
Access authorisation with PIN code (variant) 105
Access authorisation for the fleet manager (variant) 107

Pre-Shift Check 111
Description of the Pre-Shift Check (variant) 111
Process 112
All questions 113
Defining the question sequence 114
Displaying the history 116
Defining the shift start 118
Resetting the truck restrictions 122

Driver profiles. 125
Driver profiles (variant) 125
Selecting driver profiles 125
Creating driver profiles 127
Renaming driver profiles 128
Deleting driver profiles. 131

Lighting 133
Retrofitting lighting equipment 133
Meaning of the symbols 133
Driving lights 134
Working spotlights 134
Working spotlight for reverse travel (variant) 136
Turn indicators 136
Hazard warning system 138
StVZO equipment 139
Rotating beacon 140
STILL SafetyLight® and STILL SafetyLight 4Plus® (variants) 140
Warning zone light and warning zone light plus (variants) 141

Efficiency and drive modes 143
STILL Classic and sprint mode 143

Driving 145
Safety regulations when driving 145
Roadways 147
Selecting drive programmes 1 to 3 149
Selecting drive programme A or B 149
Configuring drive programmes A and B 150
Selecting the drive direction 152
Actuating the drive direction switch with the multiple-lever version 153
Actuating the drive direction switch with the mini-lever version 153
Actuating the drive direction switch with the Fingertip version 153
Actuating the vertical rocker button for the "drive direction" with the Joystick 4Plus version 154
Actuating the drive direction selection lever with the travel direction selector and indicator module version 155
Starting drive mode 155
Starting drive mode, dual pedal version (variant) 157
Operating the service brake 159
Actuating the parking brake 161
Steering 164
Reducing speed when turning (Curve Speed Control) 165
Speed restriction (variant) 166
Cruise control (variant) 168

Parking 173
Parking the truck securely and switching it off 173
Wheel chock (variant) 175

Lifting 176
Lifting system variants 176
Lift mast versions 176

Operating devices for the lifting system . . . 177
Controlling the lifting system using multi-lever operation . . . 179
Controlling the lifting system using a double mini-lever . . . 181
Controlling the lifting system using a triple mini-lever . . . 183
Controlling the lifting system using a quadruple mini-lever . . . 185
Controlling the lifting system using the Fingertip . . . 185
Controlling the lifting system using the Joystick 4Plus . . . 188
Dynamics of the hydraulic movements . . . 191
Selecting load programs 1 to 3 . . . 192
Fork wear protection (variant) . . . 193
Changing the fork arms . . . 194
Malfunctions during lifting mode . . . 196
Hydraulic blocking function . . . 197

Handling loads . . . 199
Safety regulations for handling loads . . . 199
Capacity rating plate . . . 199
Picking up loads . . . 204
Danger area . . . 205
Transporting pallets . . . 206
Transporting suspended loads . . . 207
Picking up a load . . . 208
Determining visibility conditions when driving with a load . . . 212
Transporting loads . . . 213
Setting down a load . . . 214
Driving on ascending and descending gradients . . . 216
Driving onto lifts . . . 217
Driving on loading bridges . . . 218

Lift height-dependent assistance systems . . . 220
Optical lift height measuring system (variant) . . . 220
Lift height display (variant) . . . 224
Easy Target (variant) . . . 224
Configuring Easy Target . . . 225
Operating Easy Target . . . 228
Intermediate lift cut-out (variant) . . . 232
Lift transition damping (variant) . . . 236
Lift mast end-stop damping (variant) . . . 237
End lift cut-out (variant) . . . 237
Speed reduction when the fork carriage is raised (variant) . . . 240
Electrical fork wear protection (variant) . . . 245

Tilt angle-dependent assistance systems . . . 248
Mast tilt angle display (variant) . . . 248
Tilt end stop damping (variant) . . . 248

Automatic mast vertical positioning (variant) 248
Function checking of the automatic mast vertical positioning function (variant) 250
Calibrating the automatic mast vertical positioning 248

Load-dependant assistance systems 253
Overload detection (variant) 253
Dynamic Load Control 1 (variant) 253
Dynamic Load Control 2 (variant) 253
Load measurement (variant) 259
Calibrating the load measurement. 260
Precision load measurement (variant). 262
Tare function (variant) 264
Total load (variant). 266

Zeroing the assistance systems 269
Zeroing process. 269

Depressurising the hydraulic system 272
Need to depressurise the hydraulic system. 272
Wizard for depressurising the hydraulic system 272
Depressurising the hydraulic system using multi-lever operation 275
Depressurising the hydraulic system using a double mini-lever 276
Depressurising the hydraulic system using the double mini-lever and the 5th function . 277
Depressurising the hydraulic system using a triple mini-lever. 278
Depressurising the hydraulic system using the triple mini-lever and the 5th function . . . 279
Depressurising the hydraulic system using a quadruple mini-lever. 280
Depressurising the hydraulic system using the quadruple mini-lever and the 5th function 281
Depressurising the hydraulic system using the Fingertip 282
Depressurising the hydraulic system using the Fingertip and the 5th function 283
Depressurising the hydraulic system using the Joystick 4Plus 284
Depressurising the hydraulic system using the Joystick 4Plus and the 5th function. . . . 285
Special feature for clamping attachments 286
Exiting the wizard 286

Attachments. 287
Fitting attachments 287
General instructions for controlling attachments 290
Attachment example for the connection of the auxiliary hydraulics. 291
Adjusting the hydraulic speed for attachments 291
Clamp locking mechanism (variant) 295
Controlling attachments using multi-lever operation 297
Controlling attachments using a double mini-lever 299
Controlling attachments using the double mini-lever and the 5th function 301
Controlling attachments using a triple mini-lever. 303

Controlling attachments using the triple mini-lever and the 5th function 305
Controlling attachments using a quadruple mini-lever. 307
Controlling attachments using the quadruple mini-lever and the 5th function 309
Controlling attachments using the Fingertip 310
Controlling attachments using the Fingertip and the 5th function 312
Controlling attachments using the Joystick 4Plus 314
Controlling attachments using the Joystick 4Plus and the 5th function. 316
Picking up a load using attachments 317

Auxiliary equipment 318
FleetManager (variant) 318
Shock recognition (variant) 318
Driver restraint systems (variants). 318
Actuating the windscreen wipers and windscreen washers (variant) 319
Filling the washer system 320
Run-on time for additional devices 320
Clipboard (variant) 322
Fire extinguisher (variant) 322
Rear box 323
SVI STILL Vehicle Interface (variant) 323

Display messages 335
Messages 335
Messages about operation 335
Messages about the truck 344

Procedure in emergencies. 346
Emergency shutdown 346
Procedure if truck tips over 347
Emergency driving via the drive direction switch/drive direction selection lever 347
Emergency lowering 349
Towing 352

Access to the battery compartment and battery male connector. 355
Opening and closing the battery door (variant) 355
Opening and closing the battery hood. 323
Connecting the battery male connector. 359
Disconnecting the battery male connector 360

Quick charge access 362
Quick charge access (variant). 362

On-board charger 368
General information about the on-board charger (variant) 368
Changing the battery type used. 370
Configuring the on-board charger 370
Charging the battery 374

Compatible batteries . . . 383
Technical data . . . 383

Handling the lead-acid battery . . . 385
Safety regulations for handling the battery . . . 385
Maintaining the battery . . . 389
Checking the battery condition, acid level and acid density . . . 390
Checking the battery charge state . . . 391
Charging the lead-acid battery . . . 393
Equalising charging to preserve the battery capacity . . . 397
Battery maintenance indicator for lead-acid batteries (variant) . . . 399

Handling the gel battery . . . 400

Handling the lithium-ion battery . . . 405
Safety regulations for handling the lithium-ion battery . . . 405
Illustration of a lithium-ion battery . . . 408
Regulations for storing lithium-ion batteries . . . 409
Checking the battery charge state . . . 411
Charging the lithium-ion battery . . . 413
Battery heating system . . . 417

Replacing and transporting the battery . . . 418
General information on replacing the battery . . . 418
Changing to a different battery type . . . 418
Replacing the battery using an external roller channel (variant) . . . 419
Replacing the battery with a C hook (variant) . . . 424
Special notes for installing the lithium-ion battery . . . 427
Transporting the battery by crane . . . 428

Li-Ion ready . . . 429
Description . . . 429

Cleaning the truck . . . 431
Cleaning the truck . . . 431
Cleaning the electrical system . . . 433
Cleaning load chains . . . 434
After cleaning . . . 434

Transporting the truck . . . 436
Transport . . . 436
Determining the total actual weight . . . 436

Wedging the wheels 437
Lashing down 438
Crane loading 439

Decommissioning 440
Decommissioning and storing the truck. 440
Use after storage or decommissioning 442

5 Maintenance

Safety regulations for maintenance 444
General information 444
Working on the hydraulic equipment 444
Working on the electrical equipment 444
Safety devices 445
Set values 445
Lifting and jacking up. 445
Working at the front of the truck 446

General maintenance information 447
Personnel qualifications. 447
Information for carrying out maintenance 447
Setting up and adjusting the due date counter for maintenance and safety checks 449
Maintenance - 1000 hours/yearly 453
Maintenance - 3000 hours/every two years. 457
Ordering spare parts and wearing parts 457
Quality and quantity of the required operating materials. 457
Lubrication plan 459
Maintenance data table 460

Providing access to maintenance points 462
Removing/installing the valve cover 462
Removing and installing the bottom plate for single pedal operation 463
Removing and installing the bottom plate for dual pedal operation (variant). 465

Preserving operational readiness 467
Lubricating joints and controls 467
Checking the hood lock 467
Maintaining the seat belt 468
Checking the driver's seat 470
Servicing wheels and tyres 470
Check the brake fluid level 471
Checking the battery 472
Adjusting the warning zone light 473
Replacing the fuses 473

Checking the hydraulic system for leak tightness 474
Checking the hydraulic oil level 475
Lubricating the lift mast and roller track 476

1000-hour maintenance/annual maintenance 477
Other work that must be carried out 477
Checking the lift cylinders and connections for leaks 477
Checking the fork arms 478
Checking the double pedal 478

6 Technical data

Ergonomic dimensions 480

Dimensions 481

VDI datasheet 483

Eco-design requirements for electric motors and variable speed drives 487

Battery specifications for lead-acid batteries 488

Battery specifications for lithium-ion batteries 489

1

Foreword

Your truck

Description of the truck

General

The STILL RXE is a battery-powered counterbalanced truck. The truck has a load capacity of up to 1.6 tonnes with a load centre of gravity of 500 mm. The truck can reach driving speeds of up to 12.5 km/h without a load.

It is suitable for indoor use and for outdoor use.

The driver's compartment has an ergonomic design with the steering column and driver's seat offset to one side.

The "STILL Easy Control" display-operating unit manages all functions that are not called up by the operating devices for drive functions and hydraulic functions. The driving condition information and all messages are issued via a large colour display. The display-operating unit uses the current battery charge state and the selected drive programme to calculate the remaining available time until the battery has to be recharged and displays this information.

Assistance systems

The STILL RXE can be equipped with assistance systems that make it easier to work with loads.

Lift height-dependent assistance systems

- Lift height display
- Easy Target
- Intermediate lift cut-out
- Lift transition damping
- Lift mast end-stop damping
- End lift cut-out
- Speed reduction when the fork carriage is raised
- Electrical fork wear protection

Tilt angle-dependent assistance systems

- Mast tilt angle display
- Automatic mast vertical positioning

Load-dependant assistance systems

- Overload detection
- Dynamic Load Control 1 or Dynamic Load Control 2
- Lift mast tilt angle display
- Automatic mast vertical positioning
- Fork wear protection
- Load measurement, precise load measurement, total load and tare function

Brake system

The brake system of the truck comprises three different brakes:

- Service brake
- Regenerative brake
- Mechanically actuated parking brake

The service brake is based on a drum brake on the front axle. This drum brake is used as the service brake for heavy braking or emergency braking with the brake pedal. In the normal working mode, the regenerative brake of the electric traction motor takes effect on the rear wheel. The regenerative brake converts the acceleration energy of the truck into electrical energy. This causes the truck to decelerate as soon as the accelerator pedal is released. If the foot is completely removed from the accelerator pedal, the truck brakes until it comes to a standstill. A parking brake ensures that the truck remains securely in place when parked.

Hydraulic system

The steering system and the hydraulic functions in the lift mast and the attachment are supplied with power via a hydraulic pump operated by an electric motor.

The proportional valve technology (variant) provides highly sensitive movements and ensures safe handling of the load. The hydraulic functions can be parameterised individually by the authorised service centre.

Up to three hydraulic circuits can be used to activate attachments (variant).

Drive

The STILL RXE is driven via the rear wheel by a maintenance-free three-phase drive with 24 volt technology.

Lead-acid batteries and lithium-ion batteries are available as an energy supply source. With the Li-Ion ready variant, the truck can be prepared ex works for the later use of a lithium-ion battery.

The STILL RXE is delivered ex works with a tightly closed battery cover. If you want to operate the truck with several batteries in alternating use, a battery door as well as an external roller channel are available as variants for easy lateral battery replacement.

The STILL RXE can have an on-board charger as a variant for charging at any protective contact socket.

Steering

The kickback-free, hydraulic rear-wheel steering with "Curve Speed Control" (CSC) ensures driving stability when cornering, allowing the truck to achieve a small turning circle and negotiate narrow aisle widths.

Operation

The multi-lever, the mini-lever, the Fingertip and the Joystick 4Plus are available as operating devices for the hydraulic functions. These operating devices enable precise operation and smooth control of the lifting speed thanks to directly controlled valves and proportional valve technology.

The acceleration behaviour and braking behaviour can be selected individually using different driving programmes.

For drive mode, the truck features either single-pedal or dual-pedal operation. Acceleration and braking (regenerative brake) via the accelerator pedal or dual-pedal operation. One pedal for the "forwards" drive direction and one pedal for the "reverse" drive direction. Acceleration and braking behaviour can be individually selected from three different driving programmes.

The "STILL Easy Control" display-operating unit simplifies daily use of the truck by providing personally configurable favourites. The display-operating unit also shows the status of the lithium-ion battery.

General

The truck described in these operating instructions corresponds to the applicable standards and safety regulations.

If the truck is to be operated on public roads, it must conform to the existing national regulations for the country in which it is being used. The driving permit must be obtained from the appropriate office.

The truck has been fitted with state-of-the-art technology. Following these operating instructions will allow the truck to be handled safely. By complying with the specifications in these operating instructions, the functionality and the approved features of the truck will be retained.

Get to know the technology, understand it and use it safely - these operating instructions provide the necessary information and help to avoid accidents and to keep the truck ready for operation beyond the warranty period.

Therefore:

– Before commissioning the truck, read the operating instructions and follow the instructions.

– Always follow all of the safety information contained in the operating instructions and on the truck.

Conformity marking

The manufacturer uses the conformity marking to document the conformity of the industrial truck with the relevant directives at the time of placing on the market:

- CE: in the European Union (EU)
- UKCA: in the United Kingdom (UK)
- EAC: in the Eurasian Economic Union

The conformity marking is applied to the nameplate. A declaration of conformity is issued for the EU and UK markets.

An unauthorised structural change or addition to the industrial truck can compromise safety, thus invalidating the declaration of conformity.

▷

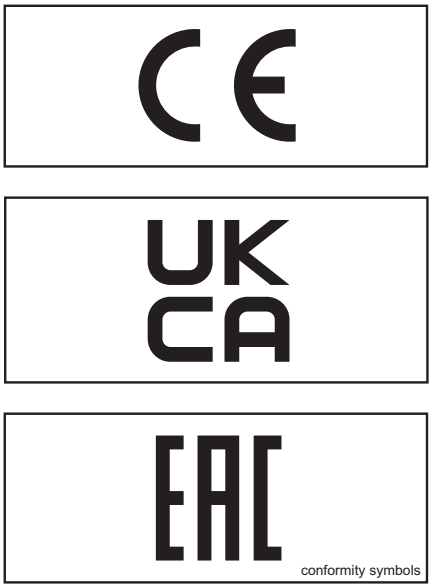

conformity symbols

Declaration that reflects the content of the declaration of conformity

Declaration

STILL GmbH
Berzeliusstraße 10
22113 Hamburg Germany

We declare that the specified machine conforms to the most recent valid version of the directives specified below:

Industrial truck type	**corresponding to these operating instructions**
Model	**corresponding to these operating instructions**

– "Machinery Directive 2006/42/EC" [1)]
– "Supply of Machinery Safety Regulations 2008, 2008 No. 1597" [2)]

Personnel authorised to compile the technical documents:

See declaration of conformity

STILL GmbH

[1)] For the markets of the European Union, the EU candidate countries, the EFTA States and Switzerland.
[2)] For the United Kingdom market.

The declaration of conformity document is supplied with the industrial truck. The declaration shown explains the conformity with the provisions of the EC Machinery Directive and the Supply of Machinery Safety Regulation 2008, 2008 No. 1597.

An unauthorised structural change or addition to the industrial truck can compromise safety, thus invalidating the declaration of conformity.

The declaration of conformity must be carefully stored and made available to the responsible authorities if necessary. It must also be handed over to the new owner if the industrial truck is sold on.

Accessories

- Key for key switch (two pieces)
- Hexagon socket wrench for emergency lowering

Labelling points

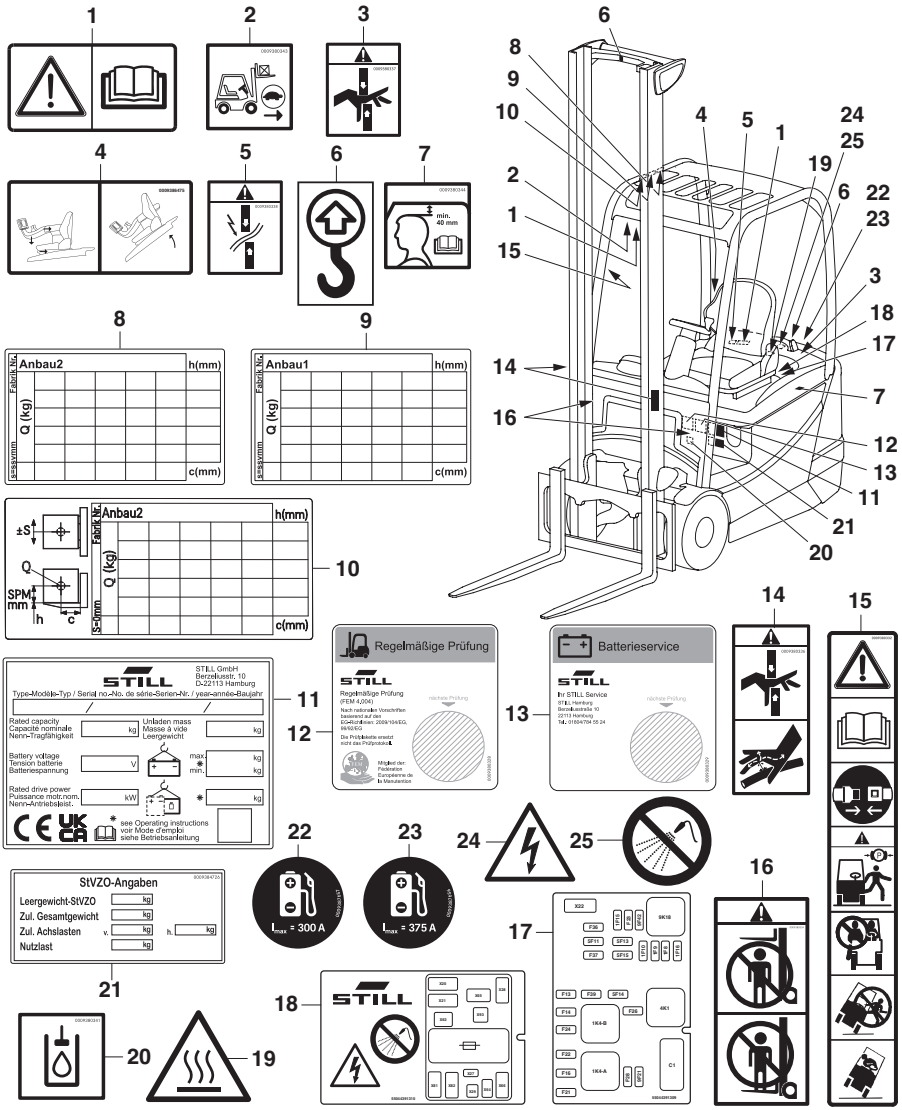

1 Decal information: Caution/read the operating instructions
2 Decal information: Speed reduction
3 Warning sign: Danger due to shearing
4 Decal information: Actions to be performed before opening the battery hood
5 Warning sign: Risk of short circuit due to shearing
6 Decal information: Lifting-gear fixing point
7 Decal information: Observe head clearance
8 Decal information: Load capacity: Attachment 2
9 Decal information: Load capacity: Attachment 1
10 Decal information: Load capacity: Basic table
11 Nameplate
12 Decal information: Regular testing
13 Decal information: Battery service
14 Warning sign: Danger due to shearing/Danger due to high fluid pressure
15 Decal information: Caution / Read the operating instructions / Fasten seat belt / Apply parking brake when leaving the truck / Passengers are not allowed / Do not jump off if the truck is tipping over / Lean in the opposite direction to which the truck is tilting
16 Warning sign: Do not stand underneath the fork/Do not stand on the fork
17 Decal information: PDFU* fuse cover inside
18 Decal information: PDFU* fuse cover outside
19 Warning sign: Hot surface
20 Decal information: Hydraulic oil tank
21 Decal information: StVZO (German Road Traffic Licensing Regulations) information
22 Decal information: Charging current limitation 300 A
23 Decal information: Charging current limitation 375 A
24 Decal information: Electrical hazard warning
25 Decal information: Do not splash with water

*Power Distribution and Fuse Unit

Nameplate

Variant 1: Industrial trucks built up to 12/2021

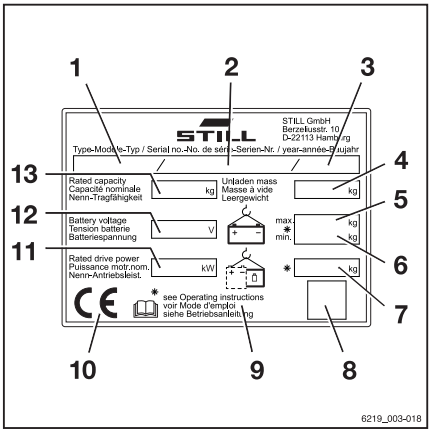

1 Model
2 Serial number
3 Year of manufacture
4 Tare weight in kilograms
5 Maximum permitted battery weight in kilograms (only for electric trucks)
6 Minimum permitted battery weight in kilograms (only for electric trucks)
7 Ballast weight in kilograms (only for electric trucks)
8 Data matrix code
9 For more detailed information, refer to the technical data in the operating instructions
10 CE labelling
11 Nominal drive power in kilowatts
12 Battery voltage V
13 Rated capacity in kilograms

Variant 2: Industrial trucks built after 12/2021

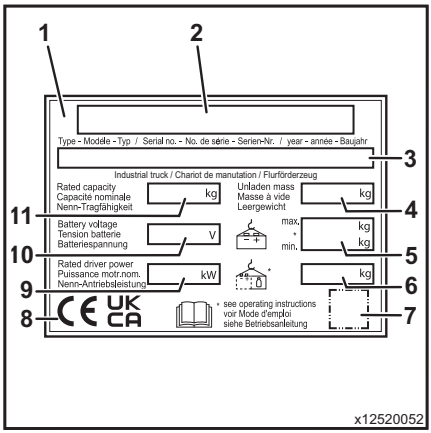

1 Nameplate
2 Manufacturer
3 Model / serial number / year of manufacture
4 Tare weight
5 Max. battery weight/min. battery weight (only for electric trucks)
6 Ballast weight (only for electric trucks)
7 Placeholder for "data matrix code"
8 Conformity marking: CE mark for the markets of the EU, the EU candidate countries, the EFTA States and Switzerland; UKCA mark for the United Kingdom market; EAC mark for the Eurasian Economic Union market
9 Rated drive power
10 Battery voltage (only for electric trucks)
11 Rated capacity

NOTE

- *It is possible for there to be multiple conformity markings on the nameplate.*
- *The EAC mark may also be located in the immediate vicinity of the nameplate.*

Serial number

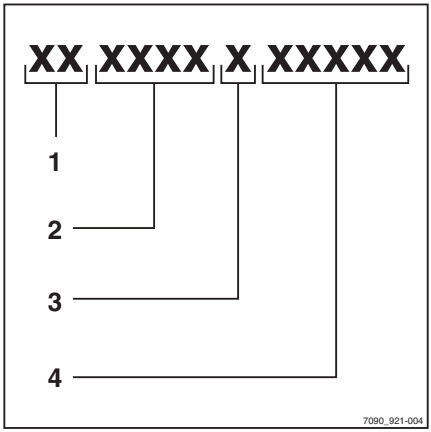

The serial number is used to identify the truck. The serial number is shown on the nameplate. Quote the serial number for all technical questions.

The serial number contains the following coded information:

1 Production location
2 Model
3 Year of manufacture
4 Sequential number

StVZO (Road Traffic Licensing Regulations) information

This label includes information on the weight and load distribution of the truck.

▷

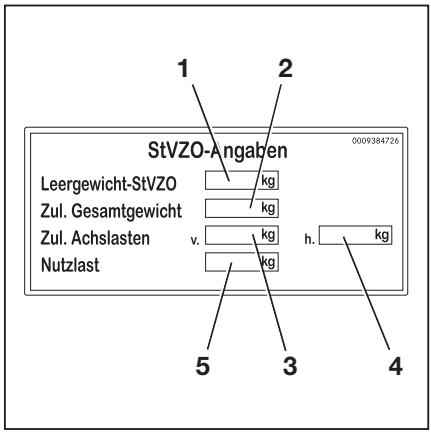

1 Tare weight (in kg)
2 Permitted total weight (in kg)
3 Permitted front axle weight (in kg)
4 Permitted rear axle weight (in kg)
5 Payload (in kg)

Using the truck

Commissioning

Commissioning is the initial intended use of the truck.

The necessary steps for the commissioning vary depending on the model and equipment of the truck. These steps require preparatory work and adjustment work that cannot be performed by the operating company. See also the chapter entitled "Definition of responsible persons".

– To commission the truck, contact the authorised service centre.

Intended use

The truck described in these operating instructions is suitable for lifting, transporting and stacking loads.

The truck may only deployed for its intended use as set out and described in these operating instructions.

If the truck is to be used for purposes other than those specified in the operating instructions, the approval of the manufacturer and, if applicable, the relevant regulatory authorities must be obtained beforehand in order to prevent hazards.

The maximum load to be lifted is specified on the capacity rating plate (load diagram) and must not be exceeded; see the section entitled "Capacity rating plate" in the chapter entitled "Handling loads".

Improper use

The operating company or driver, and not the manufacturer, is liable for any hazards caused by improper use.

NOTE

Please note the definition of the following responsible persons: "operating company" and "driver".

Use for purposes other than those described in these operating instructions is prohibited.

⚠ DANGER

There is a risk of fatal injury from falling off the truck while it is moving!

– It is prohibited to carry passengers on the truck.

The truck may not be operated in areas where there is a risk of explosion, in areas that cause corrosion or in areas that are particularly dusty.

Stacking or unstacking on inclined surfaces or ramps is not permitted.

Place of use

The truck can be used both outdoors and in buildings. Operation on public roads is only permitted if the "StVZO" (German Road Traffic Licensing Regulations) equipment variant is installed.

If the truck is to be operated on public roads, it must conform to the national regulations for the country in which it is being used.

The ground must have an adequate load capacity (concrete, asphalt) and a rough surface. Routes, work areas and aisle widths must conform to the specifications in these operating instructions, see the "Routes" chapter.

Driving on upward and downward gradients is permitted provided the specified data and specifications are observed, see the "Routes "chapter.

The truck is suitable for indoor and outdoor use in countries ranging from the Tropics to Nordic regions (temperature range: -20 °C to +40 °C).

This truck is not designed to be operated in cold stores.

⚠ CAUTION

Batteries may freeze!

If the truck is parked in an ambient temperature of below -10 °C for an extended period, the batteries will cool down. The electrolyte may freeze and damage the batteries. The truck will then not be ready for operation.

– When the ambient temperature is below -10 °C, only park the truck for short periods of time.

The operating company must ensure suitable fire protection for the relevant application in the truck's surroundings. Depending on the application, additional fire protection must be provided on the truck. If in doubt, contact the relevant authorities.

NOTE

Please note the definition of "operating company" in the sense of responsible persons!

Parking in temperatures below -10 °C

⚠ CAUTION

Batteries may freeze or switch off!

If the truck is parked in an ambient temperature of below -10°C for an extended period, the batteries will cool down.

For lead-acid batteries, the electrolyte can freeze and damage the batteries.

Some types of lithium-ion batteries switch off at a certain temperature. These batteries cannot be switched on again until the operating temperature is reached.

The truck is then not ready for operation.

– At ambient temperatures of below -10°C, only park the truck for short periods of time.

– Pay attention to the equipped battery and the corresponding operating instructions.

Using working platforms

⚠ WARNING

The use of working platforms is regulated by national law. The use of working platforms is only permitted by virtue of the jurisdiction in the country of use.

– Observe national legislation.

– Before using working platforms, consult the national regulatory authorities.

Information about the documentation

Scope of the documentation

- Original operating instructions of the truck
- Original operating instructions of the display-operating unit
- Original operating instructions of the lithium-ion battery (variant)
- Operating instructions of other variants that are not mentioned in these original operating instructions
- "CO"Operating instructions or inserts (depending on the truck equipment)

These operating instructions describe all measures necessary for the safe operation and proper maintenance of the truck in all possible variants available at the time of printing. Special versions to meet customer requirements (CO) are documented in separate operating instructions. If you have any questions, contact your authorised service centre.

Enter the serial number and year of manufacture from the nameplate in the space provided:

Serial number	
Year of manufacture	

Please quote the serial number in all technical enquiries.

Each truck comes with a set of operating instructions. These instructions must be stored carefully and must be available to the driver and operating company at all times. The storage location is specified in the section entitled "Overview of the driver's compartment".

If a copy of the operating instructions is lost, the operating company must obtain a replacement from the manufacturer immediately.

The operating instructions are included in the spare parts list and can be reordered as a spare part.

The personnel responsible for operating and maintaining the equipment must be familiar with these operating instructions.

The operating company must ensure that all users have received, read and understood these operating instructions.

Safely store the complete documentation and pass on to the subsequent operating company when transferring or selling the truck.

NOTE

Please note the definition of the following responsible persons: "operating company" and "driver".

Thank you for reading and complying with these operating instructions. If you have any questions or suggestions for improvements, or if you have found any errors, please contact the authorised service centre.

Supplementary documentation

This industrial truck can be fitted with a **C**ustomer **O**ption (**CO**) that deviates from the standard equipment and the variants.

This CO may consist of:

- Special sensors
- A special attachment
- A special towing device
- Customised attachments

When fitted with a CO, the industrial truck is provided with additional documentation. This may take the form of an insert or separate operating instructions.

The original operating instructions for this industrial truck are valid for the operation of standard equipment and variants without restriction. The operational and safety information in the original operating instructions continues to be valid in its entirety unless it is countermanded in this additional documentation.

The requirements for the qualification of personnel as well as the time for maintenance may vary. This is defined in the additional documentation.

– If you have any questions, contact your authorised service centre.

Issue date and topicality of the operating instructions

The issue date and the version of these operating instructions can be found on the title page.

STILL is constantly engaged in the further development of trucks. These operating instructions are subject to change, and any claims based on the information and/or illustrations contained in them cannot be asserted.

Please contact your authorised service centre for technical support relating to your truck.

Copyright and trademark rights

These instructions, including excerpts thereof, must not be reproduced, translated or made accessible to third parties, except with the express written approval of the manufacturer.

Explanation of signal terms used

⚠ DANGER

Indicates procedures that must be strictly adhered to in order to prevent the risk of fatalities.

⚠ WARNING

Indicates procedures that must be strictly adhered to in order to prevent the risk of injuries.

⚠ CAUTION

Indicates procedures that must be strictly adhered to in order to prevent material damage and/or destruction.

NOTE

For technical requirements that require special attention.

ENVIRONMENT NOTE

To prevent environmental damage.

List of abbreviations

This list of abbreviations applies to all types of operating instructions. Not all of the abbreviations that are listed here will necessarily appear in these operating instructions.

Abbreviation	Meaning	Explanation
ArbSchG	Arbeitsschutzgesetz	German implementation of EU occupational health and safety directives
BetrSichV	Betriebssicherheitsverordnung	German implementation of the EU working equipment directive
BG	Berufsgenossenschaft	German insurance company for the company and employees
BGG	Berufsgenossenschaftlicher Grundsatz	German principles and test specifications for occupational health and safety
BGR	Berufsgenossenschaftliche Regel	German rules and recommendations for occupational health and safety
DGUV	Berufsgenossenschaftliche Vorschrift	German accident prevention regulations

Abbreviation	Meaning	Explanation
CE	Communauté Européenne	Confirms conformity with product-specific European directives (CE labelling)
CEE	Commission on the Rules for the Approval of the Electrical Equipment	International commission on the rules for the approval of electrical equipment
DC	Direct Current	Direct current
DFÜ	Datenfernübertragung	Remote data transfer
DIN	Deutsches Institut für Normung	German standardisation organisation
EG	European Community	
EN	European standard	
FEM	Fédération Européene de la Manutention	European Federation of Materials Handling and Storage Equipment
F_{max}	maximum Force	Maximum power
GAA	Gewerbeaufsichtsamt	German authority for monitoring/issuing regulations for worker protection, environmental protection, and consumer protection
GPRS	General Packet Radio Service	Transfer of data packets in wireless networks
ID no.	Identification number	
ISO	International Organization for Standardization	International standardisation organisation
K_{pA}	Uncertainty of measurement of sound pressure levels	
LAN	Local Area Network	Local area network
LED	Light Emitting Diode	Light emitting diode
L_p	Sound pressure level at the workplace	
L_{pAZ}	Average continuous sound pressure level in the driver's compartment	
LSP	Load centre of gravity	Distance of the centre of gravity of the load from the front face of the fork backs
MAK	Maximum workplace concentration	Maximum permissible air concentrations of a substance at the workplace
Max.	Maximum	Highest value of an amount
Min.	Minimum	Lowest value of an amount
PIN	Personal Identification Number	Personal identification number
PPE	Personal protective equipment	
SE	Super-Elastic	Superelastic tyres (solid rubber tyres)

Abbreviation	Meaning	Explanation
SIT	Snap-In Tyre	Tyres for simplified assembly, without loose rim parts
StVZO	Straßenverkehrs-Zulassungs-Ordnung	German regulations for approval of vehicles on public roads
TRGS	Technische Regel für Gefahrstoffe	Ordinance on hazardous materials applicable in the Federal Republic of Germany
UKCA	United Kingdom Conformity Assessed	Confirms conformity with the product-specific directives that apply in the United Kingdom (UKCA labelling)
VDE	Verband der Elektrotechnik Elektronik Informationstechnik e. V.	German technical/scientific association
VDI	Verein Deutscher Ingenieure	German technical/scientific association
VDMA	Verband Deutscher Maschinen- und Anlagenbau e. V.	German Mechanical Engineering Industry Association
WLAN	Wireless LAN	Wireless local area network

Definition of directions

The directions "forwards" (1), "backwards" (3), "right" (2) and "left" (4) refer to the installation position of the parts as seen from the driver's compartment; the load is to the front.

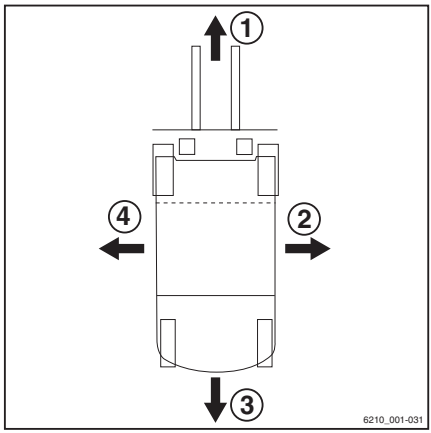

Schematic views

View of functions and operating procedures ▷

At many points in this documentation, the (mostly sequential) operation of certain functions or operating procedures is explained. Schematic diagrams of a counterbalance truck are used to illustrate these procedures.

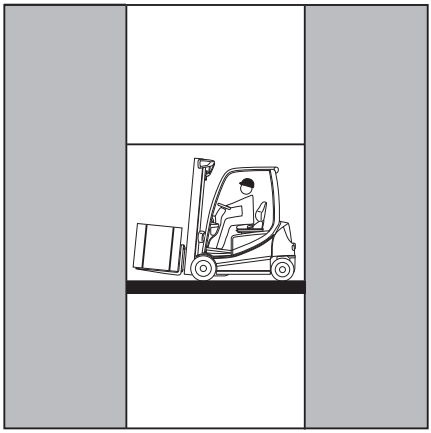

NOTE

These schematic views are not representative of the structural state of the documented truck. The views are used solely for the purpose of clarifying procedures.

View of the display-operating unit ▷

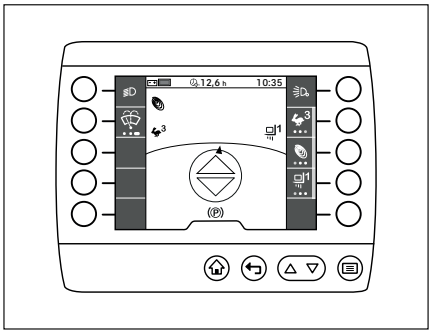

NOTE

Views of operating statuses and values in the display of the display and operating unit are examples and partly dependent on the truck equipment. As a result, the displays shown of the actual operating statuses and values may vary.

Environmental considerations

Packaging

During delivery of the truck, certain parts are packaged to provide protection during transport. This packaging must be removed completely prior to initial start-up.

ENVIRONMENT NOTE

The packaging material must be disposed of properly after delivery of the truck.

Disposal of components and batteries

The truck is composed of different materials. If components or batteries need to be replaced and disposed of, they must be:

- disposed of,
- treated or
- recycled in accordance with regional and national regulations.

NOTE

The documentation provided by the battery manufacturer must be observed when disposing of batteries.

ENVIRONMENT NOTE

We recommend working with a waste management company for disposal purposes.

2

Safety

Definition of responsible persons

Operating company

The operating company is the natural or legal person or group who operates the truck or on whose authority the truck is used.

The operating company must ensure that the truck is only used for its proper purpose and in compliance with the safety regulations set out in these operating instructions.

The operating company must ensure that all users read and understand the safety information.

The operating company is responsible for the scheduling and correct performance of regular safety checks.

We recommend that the national performance specifications are adhered to.

Specialist

A qualified person is defined as a service engineer or a person who fulfils the following requirements:

- A completed vocational qualification that demonstrably proves their professional expertise. This proof should consist of a vocational qualification or a similar document.
- Professional experience indicating that the qualified person has gained practical experience of industrial trucks over a proven period during their career During this time, this person has become familiar with a wide range of symptoms that require checks to be carried out, such as based on the results of a hazard assessment or a daily inspection
- Recent professional involvement in the field of the industrial truck test in question and an appropriate further qualification are essential. The qualified person must have experience of carrying out the test in question or of carrying out similar tests. Moreover, this person must be aware of the latest technological developments regarding the industrial truck to be tested and the risk being assessed

Drivers

This truck may only be driven by suitable persons who are at least 18 years of age, have been trained in driving, have demonstrated their skills in driving and handling loads to the operating company or an authorised representative, and have been specifically instructed to drive the truck. Specific knowledge of the truck to be operated is also required.

The training requirements under §3 of the Health and Safety at Work Act and §9 of the plant safety regulations are deemed to have been satisfied if the driver has been trained in accordance with BGG (General Employers' Liability Insurance Association Act) 925. Observe the national regulations for your country.

Driver rights, duties and rules of behaviour

The driver must be trained in his rights and duties.

The driver must be granted the required rights.

The driver must wear protective equipment (protection suit, safety footwear, safety helmet, industrial goggles and gloves) that is appropriate for the conditions, the job and the load to be lifted. Solid footwear should be worn to ensure safe driving and braking.

The driver must be familiar with the operating instructions and have access to them at all times.

The driver must:

- have read and understood the operating manual
- have familiarised himself with safe operation of the truck
- be physically and mentally able to drive the truck safely

⚠ DANGER

The use of drugs, alcohol or medications that affect reactions impair the ability to drive the truck!

Individuals under the influence of the aforementioned substances are not permitted to perform work of any kind on or with the truck.

Prohibition of use by unauthorised persons

The driver is responsible for the truck during working hours. He must not allow unauthorised persons to operate the truck.

When leaving the truck, the driver must secure it against unauthorised use, e.g. by pulling out the key.

Basic principles for safe operation

Insurance cover on company premises

In many cases, company premises are restricted public traffic areas.

NOTE

The business liability insurance should be reviewed to ensure that, in the event of any damage caused in restricted public traffic areas, there is insurance cover for the truck in respect of third parties.

Modifying and retrofitting

If the truck will be used for work that is not listed in the directives or in these instructions, convert or retrofit the truck for this purpose as required. Any structural modification can impair the handling and stability of the truck, and can result in accidents.

The following modifications to components and properties are permitted only with the written approval of the manufacturer (examples):

- Any modifications that adversely affect the stability or load capacity of the truck or the circumferential view from the truck
- Braking
- Steering
- Operating devices
- Safety systems
- Equipment variants
- Attachments

If necessary, obtain approval from the relevant authorities. Observe the national regulations for the country in which the truck is being used

We warn against installing and using restraint systems that have not been approved by the manufacturer.

– Contact the authorised service centre before converting or retrofitting restraint systems.

Only the authorised service centre is permitted to perform welding work on the truck.

⚠ DANGER

Risk of explosion from additional bores in the battery hood!

Explosive gases can escape and can lead to potentially fatal injuries if they explode. Sealing bores with plugs is not sufficient to prevent gas from escaping.

– Do not drill any holes in the battery hood.

⚠ DANGER

Risk of accident from additional bores in the battery hood!

The rigidity of the battery hood is impaired and the battery hood can break. The driver's seat may collapse into the battery hood, which could cause the driver to perform uncontrolled steering and driving manoeuvres.

– Do not drill any holes in the battery hood.

⚠ DANGER

Risk of fatal injury from falling load!

There is a risk to the driver's life if the truck is not equipped with an overhead guard, as the driver may be struck by a load falling from a lift height of 1800 mm or greater.

Operation of the truck without an overhead guard is prohibited at a lift height greater than 1800 mm.

– At lift heights of 1800 mm and above, only use the truck in conjunction with an overhead guard.

The operating company is only permitted to make modifications to the truck independently if the manufacturer goes into liquidation and the company is not taken over by another legal person.

The operating company must also fulfil the following prerequisites:

- Design documents, test documents and assembly instructions associated with the modification must be permanently archived and remain accessible at all times.
- The capacity rating plate, the decal information, the hazard warnings and the operating instructions must be checked to ensure that

they are consistent with the modifications and must be amended if required.

- Modifications must be designed, checked and implemented by a design office that specialises in industrial trucks. The design office must comply with the standards and directives valid at the time that modifications are made.

Decal information with the following data must be permanently affixed to the truck so that it is clearly visible:

- Type of modification
- Date of modification
- Name and address of the company that carried out the modification

Changes to the overhead guard and roof loads

⚠ DANGER

In the event of the overhead guard failing due to a falling load or the truck tipping over, there are potentially fatal consequences for the driver. There is a risk to life!

Welding and drilling on the overhead guard changes the material characteristics and the structural design of the overhead guard. Excessive forces caused by falling loads or the truck tipping over may result in buckling of the modified overhead guard and no protection for the driver.

– Do not perform welding on the overhead guard.

– Do not perform drilling on the overhead guard.

⚠ CAUTION

Heavy roof loads damage the overhead guard!

To ensure the stability of the overhead guard at all times, a roof load may only be mounted on the overhead guard if the structural design has been tested and the manufacturer has given approval.

– Seek advice from the authorised service centre for the mounting of roof loads.

Warning regarding non-original parts

Original parts, attachments and accessories are specially designed for this truck. We

specifically draw your attention to the fact that parts, attachments and accessories supplied by other companies have not been tested and approved by STILL.

⚠ CAUTION

Installation and/or use of such products may therefore have a negative impact on the design features of the truck and thus impair active and/or passive driving safety.

We recommend that you obtain approval from the manufacturer and, if necessary, from the relevant regulatory authorities before installing such parts. The manufacturer accepts no liability for any damage caused by the use of non-original parts and accessories without approval.

Damage, defects and misuse of safety systems

Damage or other defects on the truck or attachment must be reported to the supervisor or responsible fleet manager immediately so that they can have the defect rectified.

Trucks and attachments that are not functional or safe to drive may not be used until they have been properly repaired.

Do not remove or deactivate safety systems and switches.

Fixed set values may only be changed with the approval of the manufacturer.

Work on the electrical system (e.g. connecting a radio, additional headlights etc.) is only permitted with the manufacturer's written approval. All electrical system interventions must be documented.

Even if they are removable, roof panels may not be removed, as they are designed to protect against small falling objects.

Tyres

⚠ DANGER

Risk to stability!

Failure to observe the following information and instructions can lead to a loss of stability. The truck may tip over, risk of accident!

The following factors can lead to a loss of stability and are therefore **prohibited**:

- Different tyres on the same axle, e.g. pneumatic tyres and superelastic tyres
- Tyres not approved by the manufacturer
- Excessive tyre wear
- Tyres of inferior quality
- Changing rim wheel parts
- Combining rim wheel parts from different manufacturers

The following rules must be observed to ensure stability:

- Only use tyres with equal and permitted levels of wear on the same axle
- Only use wheels and tyres of the same type on the same axle, e.g. only superelastic tyres
- Only use wheels and tyres approved by the manufacturer
- Only use high-quality products

Wheels and tyres approved by the manufacturer can be found on the spare parts list.
If other wheels or tyres are to be used, authorisation from the manufacturer must be obtained beforehand.

– Contact the authorised service centre on this matter.

When changing wheels or tyres, always ensure that this does not cause the truck to tilt to one side (e.g. always replace right-hand and left-hand wheels at the same time). Changes must only be made following consultation with the manufacturer.

If the type of tyre used on an axle is changed, for example from superelastic tyres to pneumatic tyres, the load diagram must be changed accordingly.

– Contact the authorised service centre on this matter.

Medical equipment

⚠ WARNING

Electromagnetic interference may occur on medical devices!

Only use equipment that is sufficiently protected against electromagnetic interference.

Medical equipment, such as pacemakers or hearing aids, may not work properly when the truck is in operation.

– Ask your doctor or the manufacturer of the medical equipment to confirm that the medical equipment is sufficiently protected against electromagnetic interference.

Exercise caution when handling gas springs and accumulators

⚠ WARNING

Gas springs are under high pressure. Improper removal results in an elevated risk of injury.

For ease of operation, various functions on the truck can be supported by gas springs. Gas springs are complex components that are subject to high internal pressures (up to 300 bar). They may under no circumstances be opened unless instructed to do so, and may be installed only when not under pressure. If required, the authorised service centre will depressurise the gas spring in accordance with the regulations before removal. Gas springs must be depressurised before recycling.

– Avoid damage, lateral forces, buckling, temperatures over 80°C and heavy contamination.
– Damaged or defective gas springs must be changed immediately.
– Contact the authorised service centre.

⚠ WARNING

Accumulators are under high pressure. Improper installation of an accumulator results in an elevated risk of injury.

Before starting work on the accumulator it must be depressurised.

– Contact the authorised service centre.

Length of the fork arms

⚠ DANGER

Risk of accident due to the incorrect selection of fork arms!

– The fork arms must match the depth of the load.

If the fork arms are too short, the load may fall off the arms after it has been picked up. In addition, be aware that the load centre of gravity may shift as a result of dynamic forces, such as braking. A load that is otherwise resting safely on the fork arms may move forwards and fall.

If the fork arms are too long, they can catch on loading units behind the load that is to be picked up. These other loading units then fall over when the load is raised.

– For help with selecting the correct fork arms, contact the authorised service centre.

Residual risk

Residual dangers, residual risks

Despite working with care and complying with the standards and regulations, the possibility of other dangers arising when using the truck cannot be ruled out.

The truck and all other system components comply with current safety requirements. Even when the industrial truck is used in accordance with its intended use and all instructions provided are followed, some residual risk cannot be excluded.

A residual risk cannot be excluded even beyond the narrow limits of the danger area that the truck itself represents. In order to be able to react immediately in the event of a malfunction, an incident, a breakdown etc., persons in the danger area must pay increased attention to the truck.

⚠ WARNING

All persons in the danger area of the truck must be aware of the dangers posed by the truck.

In addition, your attention is drawn to the safety regulations given in these operating instructions.

Risks can include:

- Escape of consumables due to leakages, rupture of lines and containers etc.
- Risk of accident when driving over difficult ground such as gradients, very smooth or uneven surfaces, or with poor visibility etc.
- Falling, tripping etc. on the truck, especially in wet weather, with leaking consumables or on icy surfaces
- Risk of fire and explosion from the batteries and electrical voltages
- Human error resulting from failure to observe the safety regulations
- Unrepaired damage or faulty and worn components
- Insufficient maintenance and testing
- Use of incorrect consumables
- Exceeding test intervals

If the operating company negligently or intentionally fails to comply with these require-

ments, this can lead to an accident. In this case, the manufacturer is exempt from liability.

Stability

The stability of the truck has been tested to the latest technological standards. If the truck is used in the proper manner and in accordance with its intended use, the stability of the truck is guaranteed. These standards only take into account the dynamic and static tipping forces that can arise when used in accordance with the specified operating rules and intended use. The danger of exceeding the moment of tilt and losing stability due to improper or incorrect operation can never be ruled out.

The loss of stability can be avoided or minimised by complying with following principles:

- Always secure the load against slipping, e.g. by lashing.
- Always transport unstable loads in suitable containers.
- Always drive slowly when cornering.
- Drive with the load lowered.
- On trucks fitted with a sideshift, align and transport loads such that the load centre of gravity is positioned centrally to the truck.
- Avoid turning and diagonally driving across slopes or gradients.
- Never have the load facing downhill when travelling on slopes or gradients.
- Always take great care when transporting suspended loads.
- Do not drive over ramp edges or steps.

Special risks associated with using the truck and attachments

Approval from the manufacturer and attachment manufacturer must be obtained each time the truck is used in a manner that falls outside the scope of normal use, and in cases where the driver is not certain that he can

use the truck correctly and without the risk of accidents.

Overview of hazards and countermeasures

NOTE

This table is intended to help evaluate the hazards in your facility and applies to all drive types. It does not claim to be complete.

– Observe the national regulations for the country in which the truck is being used.

Hazard	Course of action	Check note √ done - Not applicable	Notes
Truck equipment does not comply with local regulations	Testing	O	If in doubt, consult the responsible factory inspectorate or employers' liability insurance association
Driver's lack of skills or qualifications	Driver training (sit-on and stand-on)	O	DGUV principle 308-001 VDI 3313 driver's licence
Usage by unauthorised persons	Access with key only for authorised persons	O	
Truck not safe for operation	Periodic inspection and rectification of defects	O	German Ordinance on Industrial Safety and Health (BetrSichV)
Risk of falling when using working platforms	Compliance with national regulations (different national laws)	O	German Ordinance on Industrial Safety and Health (BetrSichV) and employer's liability insurance associations
Impaired visibility due to load	Application planning	O	German Ordinance on Industrial Safety and Health (BetrSichV)
Contamination of breathable air	Assessment of diesel exhaust gases	O	Technical Regulations for Hazardous Substances (TRGS) 554 and the German Ordinance on Industrial Safety and Health (BetrSichV)
	Assessment of LPG exhaust gases	O	German threshold limit values list (MAK-Liste) and the German Ordinance on Industrial Safety and Health (BetrSichV)

Hazard	Course of action	Check note √ done - Not applicable	Notes
Impermissible usage (improper usage)	Provide operating instructions	O	German Ordinance on Industrial Safety and Health (BetrSichV) and German Health and labour protection law (ArbSchG)
	Written notice of instruction to driver	O	German Ordinance on Industrial Safety and Health (BetrSichV) and German Health and labour protection law (ArbSchG)
	German Ordinance on Industrial Safety and Health (BetrSichV), observe the operating instructions	O	
When fuelling			
a) Diesel	German Ordinance on Industrial Safety and Health (BetrSichV), observe the operating instructions	O	
b) LPG	DGUV regulation 79, observe the operating instructions	O	
When charging the drive battery	German Ordinance on Industrial Safety and Health (BetrSichV), observe the operating instructions	O	VDE 0510-47 (= DIN EN 62485-3): In particular - Ensure adequate ventilation - Insulation value within the permissible range
When using battery chargers	German Ordinance on Industrial Safety and Health (BetrSichV), DGUV rule 113-001 and observe the operating instructions	O	German Ordinance on Industrial Safety and Health (BetrSichV) and DGUV rule 113-001
When parking LPG trucks	German Ordinance on Industrial Safety and Health (BetrSichV),	O	German Ordinance on Industrial Safety and Health (BetrSichV) and DGUV rule 113-001

Hazard	Course of action	Check note √ done - Not applicable	Notes
	DGUV rule 113-001 and observe the operating instructions		
When operating driverless transport systems			
Roadway quality inadequate	Clean/clear roadways	O	German Ordinance on Industrial Safety and Health (BetrSichV)
Loading equipment incorrect/slipped	Reposition load on pallet	O	German Ordinance on Industrial Safety and Health (BetrSichV)
Unpredictable driving behaviour	Employee training	O	German Ordinance on Industrial Safety and Health (BetrSichV)
Routes blocked	Mark routes Keep roadways clear	O	German Ordinance on Industrial Safety and Health (BetrSichV)
Routes intersect	Announce right-of-way rule	O	German Ordinance on Industrial Safety and Health (BetrSichV)
No person detection when placing goods into stock and removing goods from stock	Employee training	O	German Ordinance on Industrial Safety and Health (BetrSichV)

Danger to employees

According to the German Ordinance on Industrial Safety and Health (BetrSichV) and labour protection law (ArbSchG), the operating company must determine and assess hazards during operation, and establish the labour protection measures required for employees (BetrSichVO). The operating company must therefore draw up appropriate operating instructions (§ 6 ArbSchG) and nominate a person who is responsible for these operating instructions. Drivers must be informed of the operating instructions that apply to them.

NOTE

Please note the definition of the following responsible persons: "operating company" and "driver".

The design and equipment of the truck comply with the standards and directives required for CE conformity. The design and equipment also comply with the standards and directives necessary for the UKCA compliance that is required in the United Kingdom. The design and equipment are therefore not part of the required scope of the hazard assessment. The same applies to attachments with their own CE labelling and UKCA labelling. The operating company must, however, select the type and equipment of the trucks so as to comply with the local provisions for deployment.

The result of the hazard assessment must be documented (§ 6 ArbSchG). In the case of truck applications involving similar hazard situations, the results may be summarised. Refer to the chapter entitled "Overview of hazards and countermeasures", which provides advice on complying with this regulation. The overview specifies the primary hazards that, in the event of non-compliance, are the most frequent causes of accidents. If other major hazards are present as a result of the specific operating conditions, these hazards must also be taken into consideration.

The conditions of use for trucks are broadly similar in many plants, so the hazards can be summarised in one overview. Observe the information provided by the relevant employers' liability insurance association on this subject.

Safety tests

Carrying out regular inspections on the truck ▷

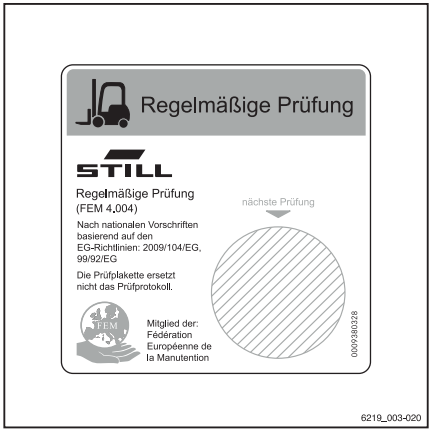

The operating company must ensure that the truck is checked by a specialist at least once a year or after particular incidents.

As part of this inspection, the technical condition of the truck must be completely tested with regard to accident safety. In addition, the truck must be thoroughly checked for damage that may have been caused by improper use. A test log must be created. The results of the inspection must be retained at least until a further two inspections have been carried out.

The inspection date is indicated by an adhesive label on the truck.

– Arrange for the authorised service centre to perform regular testing on the truck.
– Observe the guidelines for tests carried out on the truck in accordance with FEM 4.004.

The operating company is responsible for ensuring that any defects are remedied without delay.

– Notify your authorised service centre.

NOTE

In addition, observe the national regulations for the country of use.

Insulation testing

The insulation of the truck must have sufficient insulation resistance. For this reason, insulation testing in accordance with DIN EN 1175 and DIN 43539, VDE 0117 and VDE 0510 must be conducted at least once yearly as part of the FEM testing.

The insulation testing results must be at least the test values given in the following two tables.

– For insulation testing, contact the authorised service centre.

The exact procedure for this insulation testing is described in the workshop manual for this truck.

NOTE

The truck's electrical system and drive batteries must be checked separately.

Test values for the drive battery

Component	Recommended test voltage	Measurements		Nominal voltage U_{Batt}	Test values
Battery	50 VDC	Batt+ Batt-	Battery tray	24 volts	> 1200 Ω
	100 VDC			48 volts	> 2400 Ω
	100 VDC			80 volts	> 4000 Ω

Test values for the entire truck

Nominal voltage	Test voltage	Test values for new trucks	Minimum values over the duration of the service life
24 volts	50 VDC	Min. 50 kΩ	> 24 kΩ
48 volts	100 VDC	Min. 100 kΩ	> 48 kΩ
80 volts	100 VDC	Min. 200 kΩ	> 80 kΩ

Regularly testing the electrical safety

The on-board charger and the associated charging cable must be tested at least once a year. This test must be carried out in accordance with the national regulations for the country of use (e.g. DIN EN 50678 & DIN EN 50699 in Germany). Contact the authorised service centre regarding this matter.

The test sticker is glued to the sticker panel by the testing technician. The due date for the next testing is always at the top of the sticker.

– Before each use, check the charging cable for damage.

– Do **not** use a damaged charging cable.

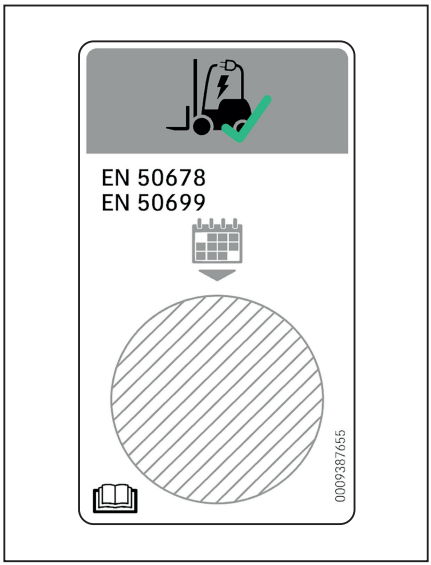

Safety regulations for handling consumables

Permissible consumables

⚠ WARNING

Consumables can be dangerous!

– Observe general information and safety information regarding the use of consumables.

– Refer to the chapter entitled "Safety regulations for handling consumables".

– Note the safety datasheets provided by the manufacturer of the consumables in question.

– Only use consumables that are approved for use with this truck. The permissible consumables can be found in the maintenance data table.

Oils

⚠ DANGER

Oils are flammable!

– Follow the statutory regulations.

– Do not allow oils to come into contact with hot engine parts.

– No smoking, fires or naked flames!

⚠ DANGER

Oils are toxic!

– Avoid contact and consumption.

– If vapour or fumes are inhaled, move to fresh air immediately.

– In the event of contact with the eyes, rinse thoroughly (for at least 10 minutes) with water and then consult an eye specialist.

– If swallowed, do not induce vomiting. Seek immediate medical attention.

⚠ WARNING

Prolonged intensive contact with the skin can result in dryness and irritate the skin!

– Avoid contact and consumption.
– Wear protective gloves.
– After any contact, wash the skin with soap and water, and then apply a skin care product.
– Immediately change soaked clothing and shoes.

⚠ WARNING

There is a risk of slipping on spilled oil, particularly when combined with water!

– Spilt oil should be removed immediately with oil-binding agents and disposed of according to the regulations.

ENVIRONMENT NOTE

Oil is a water-polluting substance!

- *Always store oil in containers that comply with the applicable regulations.*
- *Avoid spilling oils.*
- *Spilt oil should be removed immediately with oil-binding agents and disposed of according to the regulations.*
- *Dispose of old oils according to the regulations.*

Hydraulic fluid

⚠ WARNING

These fluids are pressurised during operation of the truck and are hazardous to your health.

– Do not spill the fluids.
– Follow the statutory regulations.
– Do not allow the fluids to come into contact with hot engine parts.

⚠ WARNING

These fluids are pressurised during operation of the truck and are hazardous to your health.

– Do not allow the fluids to come into contact with the skin.

– Avoid inhaling spray.

– Penetration of pressurised fluids into the skin is particularly dangerous if these fluids escape at high pressure due to leaks in the hydraulic system. In case of such injury, immediate medical assistance is required.

– To avoid injury, use appropriate personal protective equipment (e.g. protective gloves, industrial goggles, skin protection and skin care products).

ENVIRONMENT NOTE

Hydraulic fluid is a water-polluting substance.

- *Always store hydraulic fluid in containers that comply with regulations*
- *Avoid spills*
- *Spilt hydraulic fluid should be removed immediately with oil-binding agents and disposed of according to the regulations*
- *Dispose of old hydraulic fluid according to the regulations*

Battery acid

⚠ WARNING

Battery acid contains dissolved sulphuric acid. This is toxic.

– Avoid touching or swallowing the battery acid at all costs.

– In case of injury, seek medical advice immediately.

⚠ WARNING

Battery acid contains dissolved sulphuric acid. This is corrosive.

- When working with battery acid, use appropriate PSA (rubber gloves, apron, protection goggles).
- When working with battery acid, never wear a watch or jewellery.
- Do not allow any acid to get onto clothing or skin or into the eyes. If this does happen, rinse immediately with plenty of clean water.
- In case of injury, seek medical advice immediately.
- Immediately rinse away spilt battery acid with plenty of water.
- Follow the statutory regulations.

ENVIRONMENT NOTE

- Dispose of used battery acid in line with the applicable regulations.

Brake fluid

⚠ WARNING

Brake fluid is poisonous!

- Avoid swallowing. In the event of swallowing, do not induce vomiting. Rinse out your mouth thoroughly with water and ask a doctor for advice.
- Avoid aerosolisation and inhalation. In the event of inhalation, seek fresh air. Ask a doctor for advice if necessary.

⚠ WARNING

Brake fluid is hazardous to your health!

Brake fluid irritates the eyes and can dry out the skin upon prolonged contact.

- Coat your hands with a protective skin cream prior to starting work.
- Avoid prolonged or intensive skin contact. In the event of skin contact, clean the wetted skin with water and soap, and subsequently apply a skin care product.
- Prevent contact with the eyes. In the event of contact with the eyes, wash out the affected eye(s) with clean water for ten minutes and then ask a doctor for advice.
- Change clothing soiled with brake fluid as soon as possible.

⚠ CAUTION

Brake fluid is flammable!

- Do not allow brake fluid to come into contact with hot motor parts.
- Smoking, fires and naked flames are prohibited.

⚠ CAUTION

Brake fluid has strong dissolving and colour-changing properties.

- Immediately rinse off any brake fluid that has splashed on paint, clothing, and shoes with plenty of water

ENVIRONMENT NOTE

Brake fluid is a water pollutant!

- *Always store brake fluid in containers complying with the regulations..*
- *Do not spill brake fluid.*
- *Spilt brake fluid must be removed immediately using an oil binding agent and disposed of in accordance with regulations*
- *Dispose of old brake fluid according to the regulations.*
- *Observe the national regulations for the country in which the truck is being used.*

Disposal of consumables

ENVIRONMENT NOTE

Materials that accumulate during repair, maintenance and cleaning must be collected properly and disposed of in accordance with the national regulations for the country in which the truck is being used. Work must only be carried out in areas designated for the purpose. Care must be taken to minimise any environmental pollution.

- Soak up any spilt fluids such as hydraulic oil, brake fluid or gearbox oil using an oil-binding agent.
- Neutralise any spilt battery acid immediately.
- Always observe national regulations concerning the disposal of used oil.

Emissions

The values specified apply to a standard truck (compare the specifications in the "Technical data" chapter). Different tyres, lift masts, additional units etc. may produce different values.

Noise emissions

The values were determined based on measuring procedures from the standard EN 12053 "Safety of industrial trucks - Test methods for measuring noise emissions", based on EN 12001, EN ISO 3744 and the requirements of EN ISO 4871.

This machine emits the following sound pressure level:

Continuous sound pressure level in the driver's compartment

L_{pAZ}
< **70** dB(A)

The values were determined in the test cycle on an identical machine from the weighted values for operating statuses and idling.

Time proportions:

- Lifting 18%
- Idling 58%
- Driving 24%

However, the indicated noise levels on the truck cannot be used to determine the noise emissions at workplaces according to the most recent version of **Directive 2003/10/EC** (daily personal noise pollution). If necessary, these noise emissions must be determined by the operating company directly at the workplaces under the actual conditions there (additional noise sources, special application conditions, sound reflections).

Observe the applicable national regulations in non-EU countries.

NOTE

Please note the definition of the following responsible person: "operating company".

Vibrations

The vibrations of the machine have been determined on an identical machine in accordance with the standards DIN EN 13059 "Safety of industrial trucks - Test methods for measuring vibration" and DIN EN 12096 "Mechanical vibration - Declaration and verification of vibration emission values".

Frequency-weighted effective value of acceleration on the seat

MSG 65 driver's seat	Uncertainty of measurement
0.54 m/s^2	**0.162** m/s^2

Tests have indicated that the amplitude of the hand and arm vibrations on the steering wheel or on the operating devices in the truck is less than 2.5 m/s^2. There are therefore no measurement guidelines for these measurements.

The personal vibration load on the driver over a working day must be determined by the operating company at the actual place of use in accordance with **Directive 2002/44/EC**, in order to consider all additional influences, such as driving route, intensity of use etc.

Observe the applicable national regulations in non-EU countries.

NOTE

Please note the definition of the following responsible person: "operating company".

Battery

DANGER

Risk of explosion due to flammable gases!

During charging, lead-acid batteries release a mixture of oxygen and hydrogen (oxyhydrogen gas). This gas mixture is explosive and must not be ignited.

- Make sure that there is always sufficient ventilation in working areas that are entirely or partially enclosed.
- Keep away from open flames and flying sparks.
- Do not smoke.
- Observe the safety regulations for handling the battery.

Radiation

In accordance with the guidelines DIN EN 62471:2009-03 (VDE 0837-471:2009-03), the STILL Safety-Light and the warning zone light (variant) are assigned to risk group 2 (medium risk) due to their photobiological hazard potential.

3

Overviews

Overview

Left-hand side view

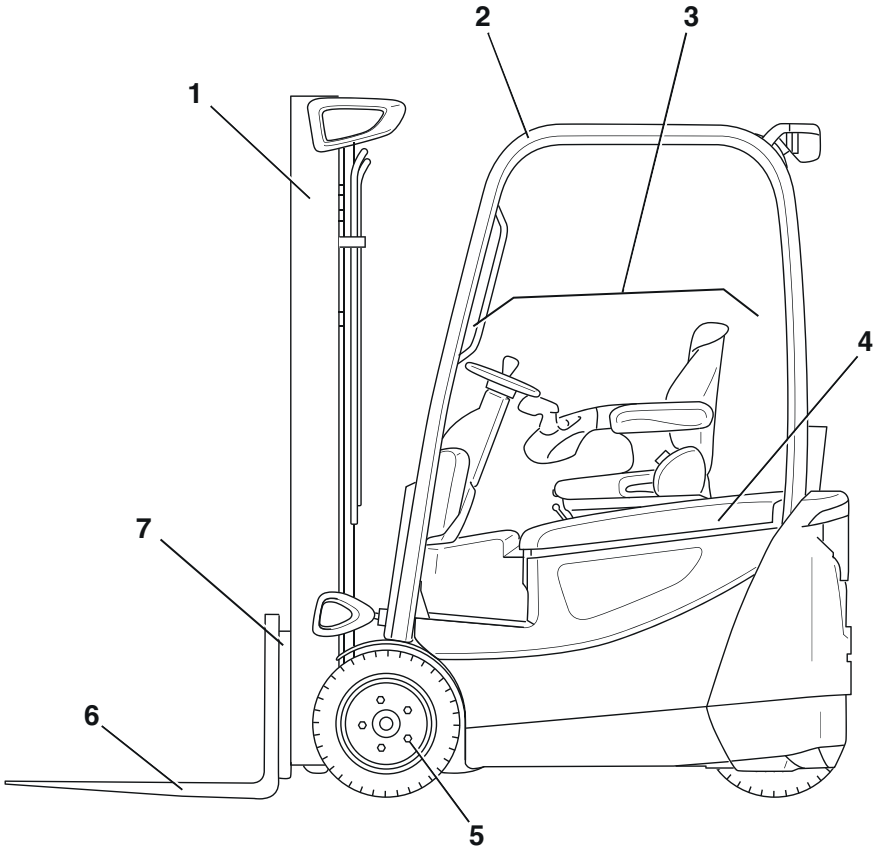

1	Lift mast	5	Running axle
2	Overhead guard	6	Fork arms
3	Driver's compartment	7	Fork carriage
4	Battery hood		

Rear view

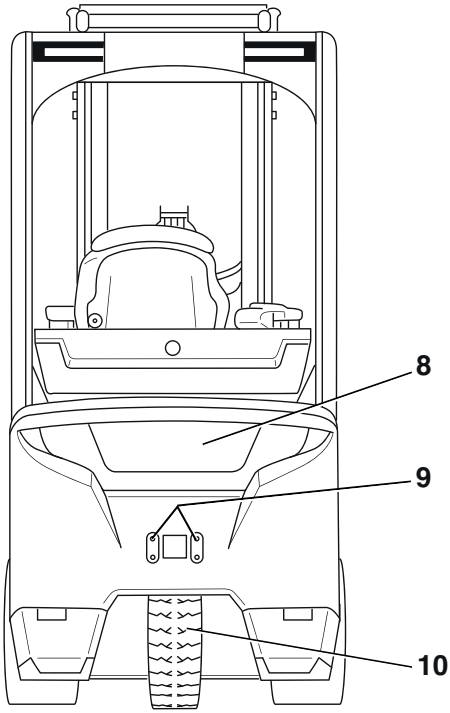

8	Counterweight	10	Drive wheel
9	Connection for towing bracket / tow coupling (optional)		

Driver's compartment

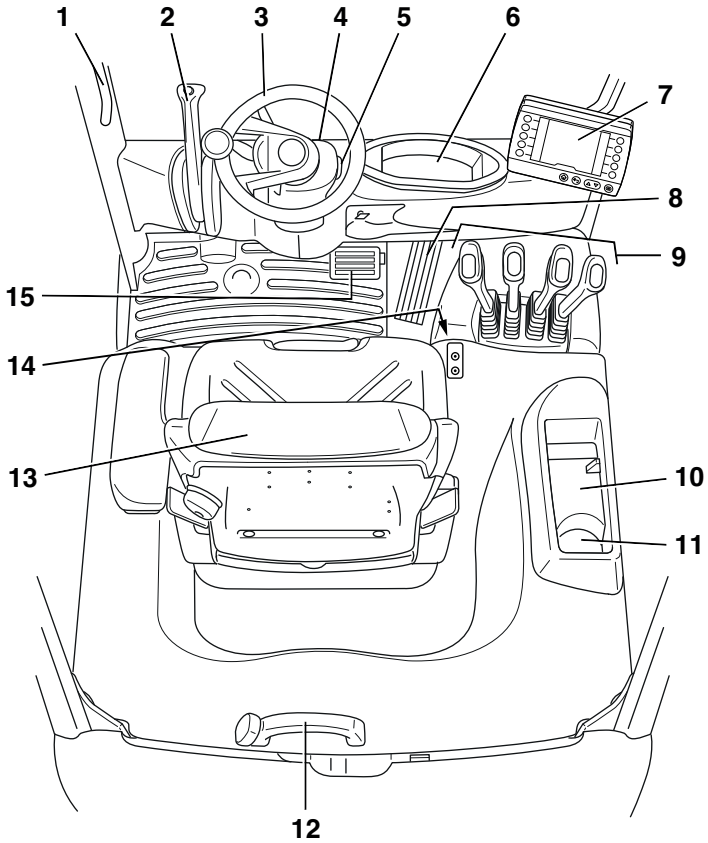

1	Handle
2	Parking brake lever
3	Steering wheel
4	Emergency off switch
5	Key switch/push button
6	Compartment
7	Display-operating unit "STILL Easy Control"
8	Accelerator pedal
9	Operating devices for hydraulic and drive functions
10	Compartment for storing the operating instructions
11	Cup holder for bottles with a maximum size of 1.0 litres
12	Battery hood handle
13	Driver's seat
14	Support mounting for storing the hexagon socket wrench for emergency lowering
15	Brake pedal

NOTE

The truck equipment may differ from the equipment shown.

Shelf and cup holder

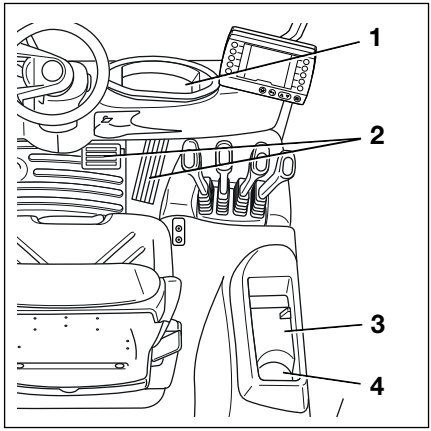

WARNING

Risk of accident caused by blocked pedals!

Objects may fall into the footwell during travel as a result of steering or braking. They can slip between and under the pedals (2). They then block the pedals. It may then not be possible to brake the truck when necessary.

- Only store objects that fit on the shelves(1, 3).
- Bottles with a maximum size of 1.0 litre may be stored in the cup holder (4).
- Make sure that objects cannot fall off the shelves when the truck sets off, is steered or braked.

The truck is equipped with a compartment (3) that holds the operating instructions. The compartment (1) holds small items such as scanners or keys. The cup holder (4) holds bottles up to 1.0 litre in size.

Operating devices and display elements

Display-operating unit "STILL Easy Control"

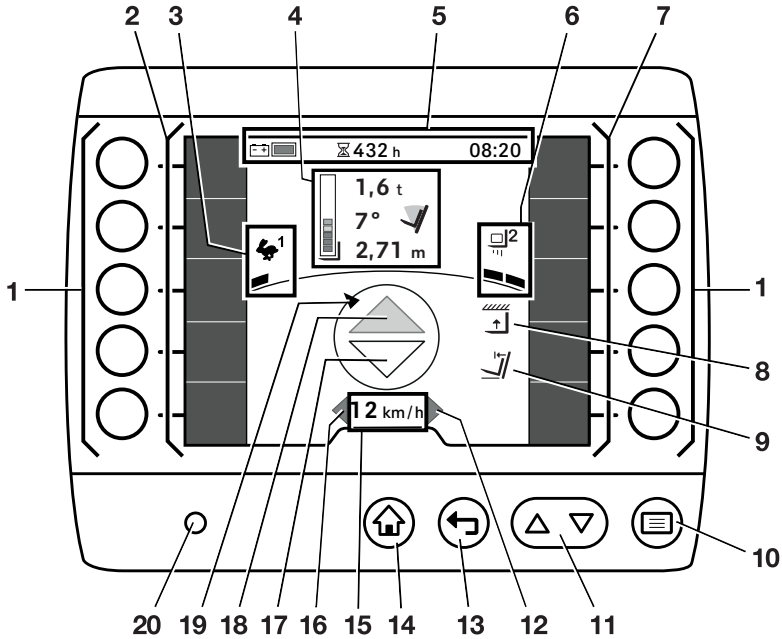

1	Softkeys
2	Left-hand favourites bar
3	Selected drive programme with driving dynamics display
4	Load information (variants): Load measurement Lift-mast tilt angle Lift height Bar display
5	Status bar: battery charge, operating hours, time
6	Selected load programme with load dynamics display
7	Right-hand favourites bar
8	Lift height restriction
9	Automatic mast vertical positioning
10	Menu button
11	Scrolling buttons
12	"Right" turn indicator display
13	Back button
14	Main-display button
15	Driving speed or parking brake Ⓟ
16	"Left" turn indicator display
17	"Reverse" drive direction indicator
18	"Forward" drive direction indicator
19	Display for direction of movement of the truck
20	Brightness sensor

"STILL Easy Control" is a third-generation display-operating unit for industrial trucks.

It is used as an operating device for the usual functions of the truck, such as controlling lighting and windscreen wiper functions and adjusting the driving dynamics.

It also shows information about the status of the truck, such as the battery charge level, display messages and operating hours.

The displays shown in this figure are examples. The display-operating unit provides further display options that can be configured by the driver or fleet manager.

– For information about the other display options, see the original operating instructions entitled "STILL Easy Control display-operating unit".

The display-operating unit is attached to the armrest, except in trucks equipped with multi-lever operation. If the truck is equipped with multi-lever operation, the display-operating unit is swivel-mounted on the right A-pillar.

– For information on swivelling the display-operating unit, see the section entitled "Adjusting the swivelling display-operating unit" in the chapter entitled "Checks and tasks before daily use".

NOTE

Do not put a label over the brightness sensor (20) or cover it with anything. This sensor allows the display to adapt to the current light conditions.

Emergency off switch

The emergency off switch (1) is situated on the right-hand side of the steering column. It disconnects the drives from the power supply.

Do not use this switch to park the truck safely.

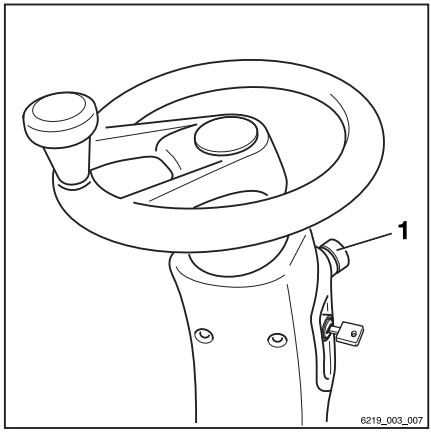

Multi-lever operation

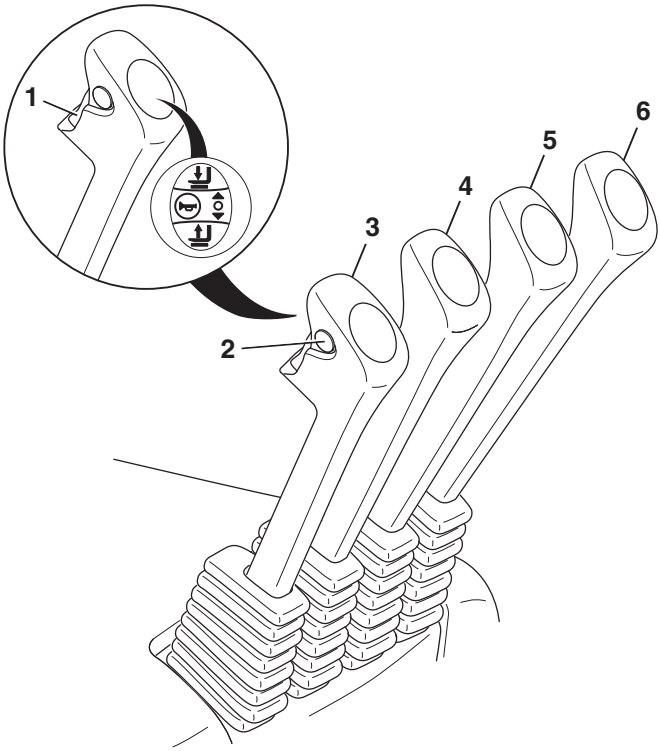

1	Drive direction switch	4	"Tilt" operating lever
2	Signal horn button	5	Operating lever for attachments (variant)
3	"Lift/lower" operating lever	6	Operating lever for attachments (variant)

NOTE

In the dual-pedal version (variant), the drive direction switch (1) is used exclusively to activate the cruise control function (variant). The drive direction is selected exclusively via the pedals in the dual-pedal version.

Double mini-lever

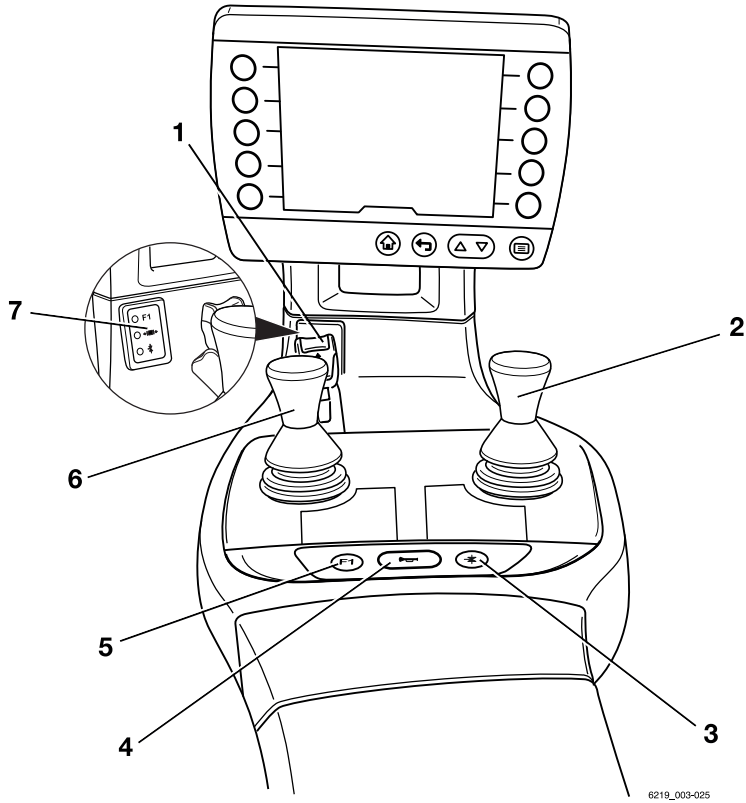

1	Drive direction switch	5	"F1" function key
2	Cross lever "Attachments"	6	"Lift mast" 360° lever
3	Function key for the "5th function"	7	Display field for the hydraulic functions
4	Signal horn button		

NOTE

- *In the dual-pedal version (variant), the drive direction switch (1) is used exclusively to activate the cruise control function (variant). The drive direction is selected exclusively via the pedals in the dual-pedal version.*
- *The authorised service centre can assign different functions to the "F1" function key (5).*

Triple mini-lever

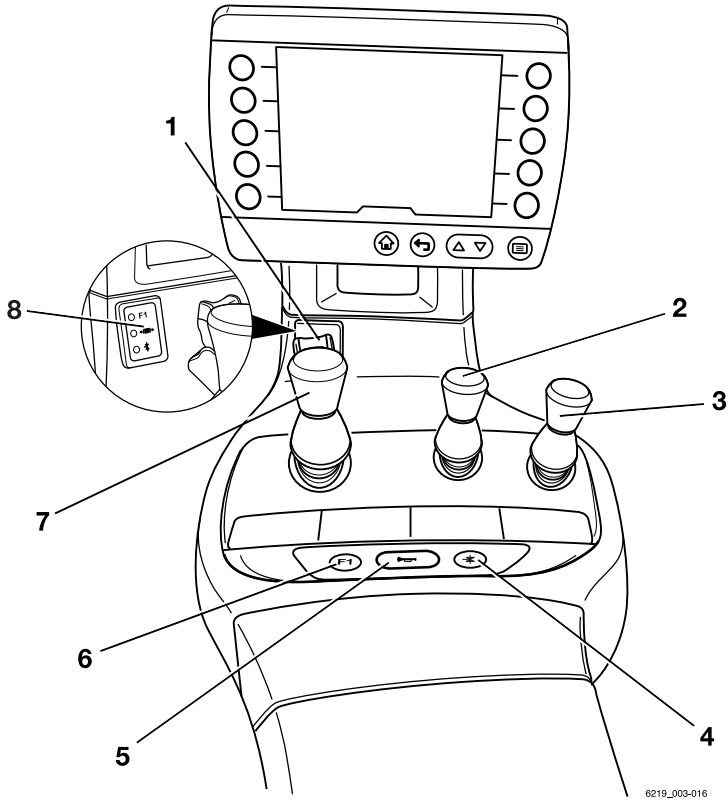

1	Drive direction switch	5	Signal horn button
2	"Auxiliary hydraulics 1" operating lever	6	"F1" function key
3	"Auxiliary hydraulics 2" operating lever	7	"Lift mast" 360° lever
4	Function key for the "5th function"	8	Display field for the hydraulic functions

NOTE

- *In the dual-pedal version (variant), the drive direction switch (1) is used exclusively to activate the cruise control function (variant). The drive direction is selected exclusively via the pedals in the dual-pedal version.*
- *The authorised service centre can assign different functions to the "F1" function key (6).*

Quadruple mini-lever

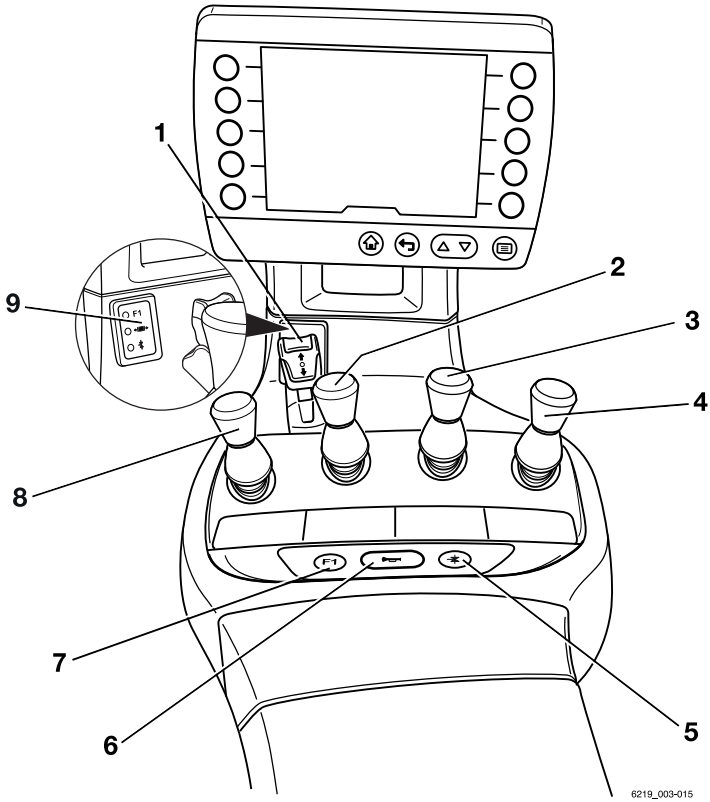

1	Drive direction switch	6	Signal horn button
2	"Tilt" operating lever	7	"F1" function key
3	"Auxiliary hydraulics 1" operating lever	8	"Lift/lower" operating lever
4	"Auxiliary hydraulics 2" operating lever	9	Display field for the hydraulic functions
5	Function key for the "5th function"		

NOTE

- *In the dual-pedal version (variant), the drive direction switch (1) is used exclusively to activate the cruise control function (variant). The drive direction is selected exclusively via the pedals in the dual-pedal version.*
- *The authorised service centre can assign different functions to the "F1" function key (7).*

Fingertip

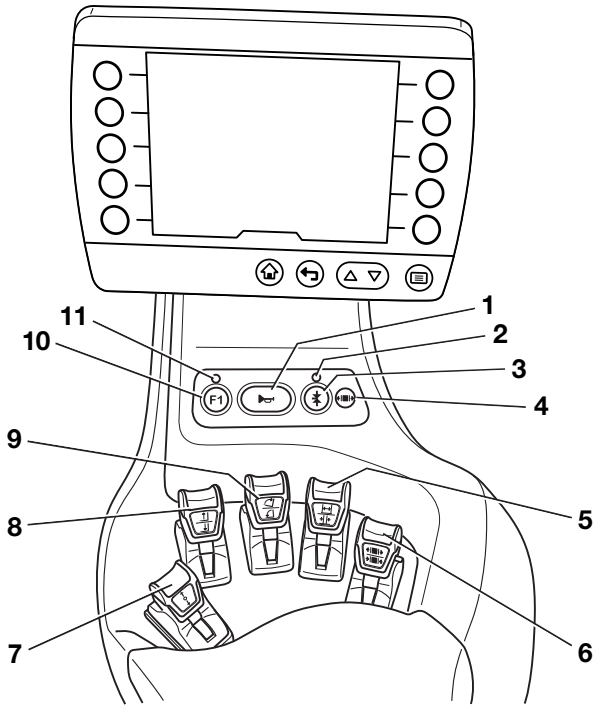

1	Signal horn button	7	Drive direction switch
2	LED for the "5th function"	8	"Lift/lower" operating lever
3	Function key for the "5th function"	9	"Tilt" operating lever
4	LED for the "Clamp release"	10	"F1" function key
5	Operating lever for "Auxiliary hydraulics 1"	11	LED for "F1"
6	Operating lever for "Auxiliary hydraulics 2"		

NOTE

- *In the dual-pedal version (variant), the drive direction switch (7) is used exclusively to activate the cruise control function (variant). The drive direction is selected exclusively via the pedals in the dual-pedal version.*
- *The authorised service centre can assign different functions to the "F1" function key (10).*

Joystick 4Plus

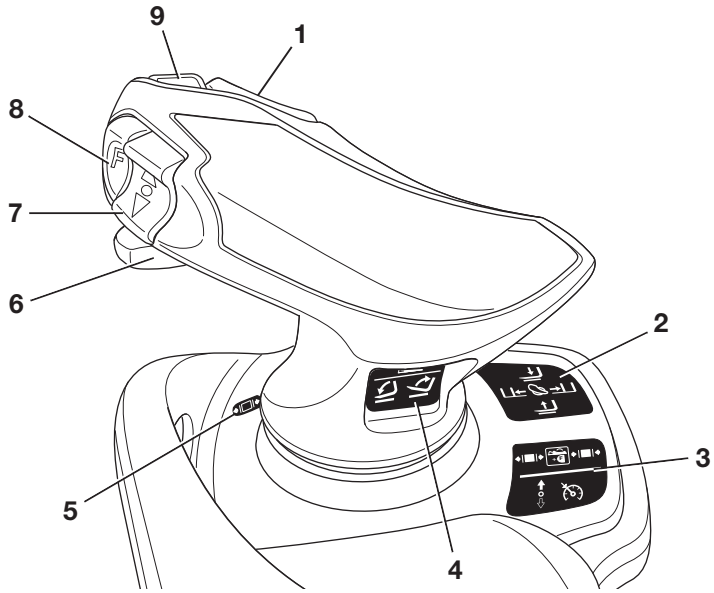

1 Horizontal rocker button for the "3rd and 4th hydraulic function": tilting the lift mast
2 Pictograms for the hydraulic functions: lifting, lowering and sideshift
3 Pictograms for the 5th hydraulic function and for the clamp locking mechanism (variant)
4 Pictograms for the 3rd and 4th hydraulic function
5 LED for the "clamp release" (variant)
6 Slider for the "4th hydraulic function"
7 Vertical rocker button for the "drive direction"
8 Shift key "F"
9 Signal horn button

NOTE

- *In the dual-pedal version (variant), the vertical "drive direction" rocker button (7) is used exclusively to activate the cruise control function (variant). The drive direction is selected exclusively via the pedals in the dual-pedal version.*
- *The authorised service centre can assign different functions to the shift key "F" (8), e.g. switchover of the control axles for actuation of the 5th hydraulic function.*

Travel direction selector and indicator module (variant) ▷

The travel direction selector and indicator module is located on the steering column below the steering wheel.

NOTE

If the drive direction switch on the operating device is defective and the truck stops in a danger area, the drive direction selection lever on the travel direction selector and indicator module can be used for emergency driving. Refer to the section entitled "Emergency driving via the drive direction switch/drive direction selection lever" in the chapter entitled "Procedure in emergencies".

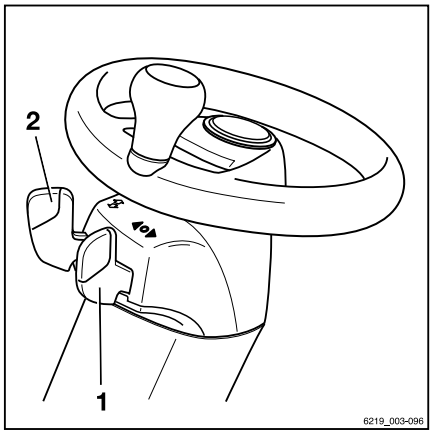

1 Drive direction selection lever
2 Turn indicator switch

4

Operation

Checks and tasks before daily use

Visual inspections and function checking

⚠ WARNING

Risk of injury from falling off the truck!

When climbing onto the truck, there is a risk of getting stuck or slipping and falling. Use suitable equipment to reach higher points on the truck.

- Use only the steps provided for this purpose to climb onto the truck.
- Use equipment such as stepladders or platforms to reach inaccessible areas.

Damage to the truck or the attachment (variant), non-functional switches or safety systems and modification of predefined set values can lead to unpredictable and dangerous situations. To ensure that the truck is operated safely, the visual inspections and function checking must be carried out before daily use. The components that must be checked and their check points are listed in the following table. If damage or other defects are identified on the truck or the attachment (variant) during the following inspections, the truck must not be used until it has been properly repaired. Damage or other defects must be reported to the supervisor or the responsible fleet manager immediately so that repairs by the authorised service centre can be arranged.

▷

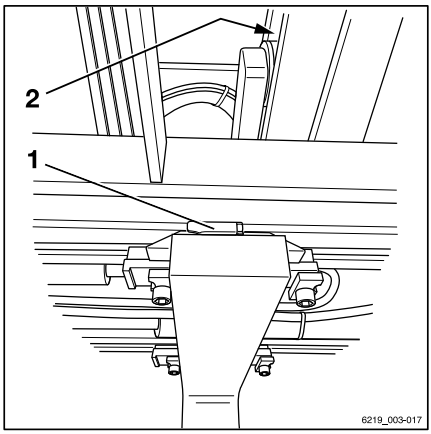

Fork arms and roller tracks

Ensure that the truck is safe for operation each day before it is used:

Component	Course of action
Fork arms, general lifting accessories	Perform a visual inspection to check for deformation and wear (e.g. to check if they are bent, broken or feature significant wear). Check the condition and function of the safety devices (1) to prevent lifting and shifting.
Roller tracks (2)	Make sure that there is a film of grease.
Load chains	Perform a visual inspection to ensure that the chains are intact and have adequate and even tension.

Component	Course of action
Attachments (variant)	Ensure that the attachments are mounted correctly in accordance with the operating instructions from the manufacturer. Perform a visual inspection to ensure that the attachments are intact and are leak-tight. Perform checks to ensure that the attachments are working correctly.
Lift cylinders, tilt cylinders, tank, valve block, hoses, pipes, connections	Perform a visual inspection for damage and leakages. Have damaged components replaced by the authorised service centre.
Underside	Check the area under the truck for leaking consumables.
Wheels, tyres	Perform a visual inspection for wear and damage. Make sure that only rims of the same type from the same manufacturer are fitted. In the event of uneven tyre wear, replace both tyres. Observe the safety regulations in the section entitled "Tyres".
Axle	Make sure that no consumables are escaping from the axle.
Brake system	Check that the truck is working correctly. See the section "Checking the brake system for correct function".
Overhead guard, guard grille (variant)	Perform a visual inspection for integrity. Check for secure mounting.
Steps	Make sure that they are clean (free of ice, not slippery).
Panes of glass (variant)	Perform a visual inspection for integrity. Make sure that they are clean (also free of ice).
Handholds	Check for secure mounting.
Maintenance lids	Check the close function and close the lid.
Battery hood	Make sure that there are no unused bores in the battery hood.
Battery door	Perform a visual inspection for integrity and deformation. Check that the interlock is in good condition and is working correctly. Check the close function. Close.
Battery	Check that the interlock is in good condition and is working correctly. Lock the battery.

Component	Course of action
Battery male connector and plug connection	Inspect the battery male connector and the plug connection for moisture or any foreign objects that may have become lodged and remove as necessary, e.g. using compressed air. Perform a visual inspection for integrity and deformation. Check the contacts. Have damaged battery male connectors replaced by the authorised service centre.
Battery cables	Perform a visual inspection for integrity. Have a damaged battery cable replaced by the authorised service centre.
Coupling pin, automatic tow coupling (variant)	Perform a visual inspection for deformation and wear (for example: bent, torn, broken). Check the securing bush in the counterweight for integrity and to ensure that it is working correctly. Check that the linchpin is present and working correctly (chain, rope, split pin). If coupling and decoupling operations are carried out more frequently than two to three times per shift, relubricate the automatic tow coupling (variant) at the lubricating nipple.
Labelling, adhesive labels	Check that labels are present and intact/legible. Replace damaged or missing adhesive labels in accordance with the section entitled "Labelling points".
Driver's seat, seat belt	Check the integrity and function.
Display-operating unit: Assistance systems	Check the function of the "assistance systems" listed in the menu. Refer to the section entitled "Function checking of assistance systems".
Lighting, warning units	Check the integrity and function.

Component	Course of action
Working hydraulics	To activate all available hydraulic functions once, actuate all hydraulic operating devices once. As a general rule: If hydraulic valves have not been operated for a long time, their function may be impaired. This applies regardless of the type and design of the hydraulic valves. This is especially true for hydraulic functions for attachments that are not used frequently. Even if the attachment is not currently mounted, operate these hydraulic functions as well.
Antistatic belt (3), corona electrode (4) (See the following illustration.)	Perform a visual inspection for integrity. Ensure cleanliness. Make sure that the antistatic belt(3) is still long enough to touch the ground in all situations. The discharge wires of the corona electrode (4) must not touch the ground. The wires discharge the energy to the air.

Depending on the tyres used, the truck is fitted ▷ with one or more antistatic belts (3) and/or with a corona electrode (4). These components ensure that the truck cannot charge statically.

– Do not use the truck if there is any damage or defects.

– In this case, contact your authorised service centre.

Any other necessary tasks are summarised under their own headings, e.g. adjusting the driver's seat.

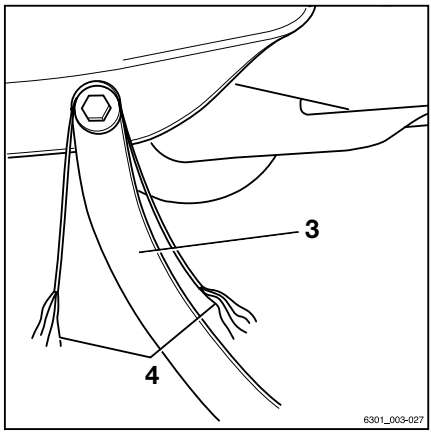

Antistatic belt and corona electrode

Climbing into and out of the truck

⚠ WARNING

Risk of injury when climbing into and out of the truck due to slipping, striking parts of the truck or becoming stuck!

If the footwell cover is very dirty or smeared with oil, there is a risk of slipping. There is a risk of hitting your head on the overhead guard post or of your clothes becoming stuck when climbing out of the truck.

– Ensure that the footwell cover is not slippery.
– Do not jump into or out of the truck.
– Ensure that you have a secure grip on the truck.

⚠ WARNING

Risk of injury when jumping out of the truck!

If your clothing or jewellery (e.g. watch, ring etc.) becomes stuck on a component while you are jumping onto or out of the truck, this can lead to serious injuries (from falling, loss of fingers etc.). It is forbidden to jump out of the truck.

– Do not jump out of the truck.
– Do not wear jewellery at work.
– Do not wear loose-fitting workwear.

⚠ CAUTION

Components may become damaged through incorrect use!

Truck components, such as the driver's seat, steering wheel, parking brake lever etc., are not designed to be used for climbing in and out of the truck and may be damaged due to misuse.

– Only use the fittings specifically designed for the purpose of climbing into and out of the truck.

To assist with climbing into and out of the truck, the footwell (4) must be used as a step and the handle (1) must be used for support. The post of the overhead guard (2) can also be used for support.

Always **climb into** the truck facing forwards:

– Grip the handle (1) with your left hand and do not let go.

– Place your left foot into the footwell (4).

– Climb into the truck with your right foot and sit down on the driver's seat (3).

Always **climb out** of the truck backwards:

– Grip the handle (1) with your left hand and do not let go.

– Stand up from the driver's seat and place your left foot in the footwell (4).

– Climb out of the truck right foot first.

▷

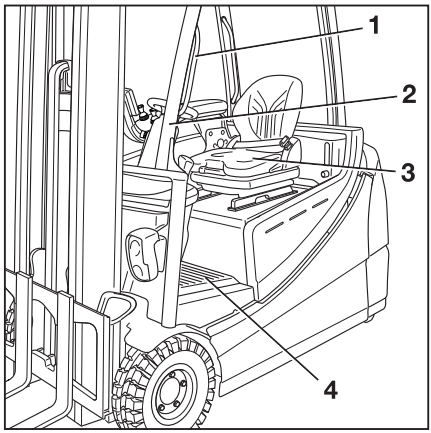

Adjusting the driver's seat and armrest

Adjusting the driver's seat and armrest is one of the checks and tasks that must be performed before daily use. The truck can only be operated safely when the seat position is correct.

– Refer to the following chapter entitled "Driver's seat".

Function checking of the assistance systems

Checking the assistance systems is one of the checks and tasks that must be performed before daily use. It is important to know which assistance systems are fitted to the truck. The assistance systems are listed in the display-operating unit.

To display the assistance systems, perform the following steps:

– Apply the parking brake.

– Press the ☰ button.

– Press the ⚙ Softkey.
– Press the `Truck information` ⓘ softkey.
– Press the `Assistance systems` softkey.
– Check the function of the assistance systems stated in the list before daily use.
– See the respective sections.

NOTE

The fleet manager can configure some assistance systems.

– Check whether the assistance systems are correctly configured for daily use.
– If they are not, have the configuration corrected by the fleet manager.

Unlock the emergency off switch ▷

– Turn the emergency off switch (1) clockwise until it pops out.

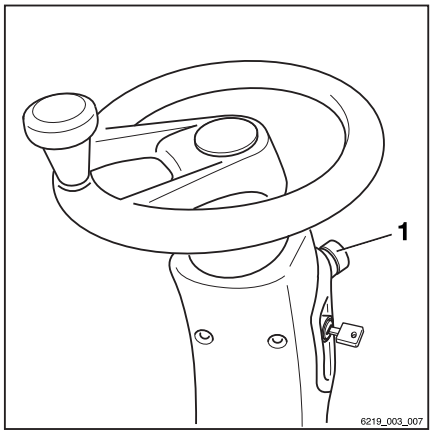

Checking the emergency off function ▷

⚠ WARNING

No electric braking assistance is available when the emergency off switch is actuated!

Actuating the emergency off switch disconnects the drives from the power supply.

– To brake, actuate the service brake.

– Drive the truck forwards slowly.

– Push the emergency off switch (1).

The truck will coast to a stop.

The message `Emergency off active` appears on the display/operating unit.

– Stop the truck by actuating the brake pedal.

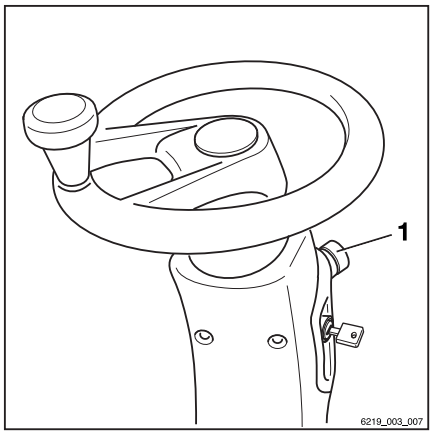

NOTE

In trucks with an electric parking brake, the electric parking brake will be applied as soon as the truck comes to a stop.

– Turn the emergency off switch (1) clockwise until it pops out.

The truck performs internal self testing. It is then ready for operation again.

Operating the signal horn

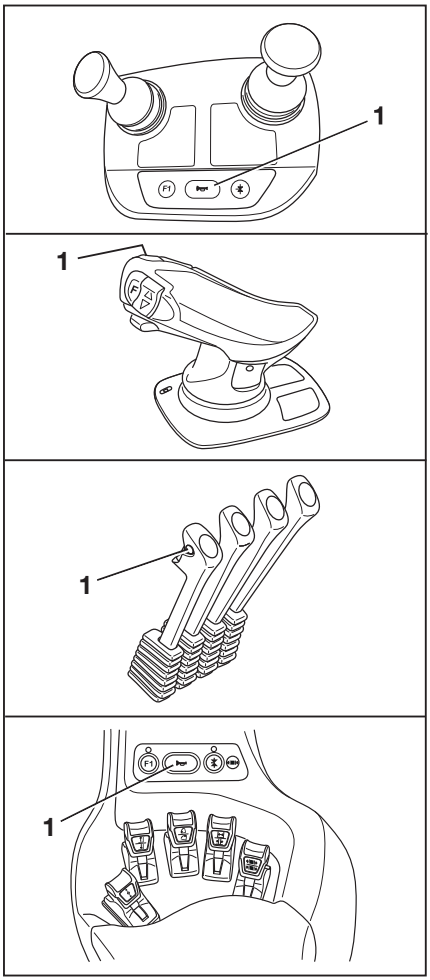

The signal horn is used to warn people against imminent danger or to announce your intention to overtake.

– Press the signal horn button (1).

The signal horn sounds.

Driver's cab

⚠ DANGER

Risk of fatal injury in the event of falling from the truck if it tips over!

In order to prevent the driver from sliding underneath the truck and being crushed if the truck tips over, a restraint system must be in place and must be used. The restraint system prevents the driver from being thrown from the truck if it tips over. The cab door must be sturdy and be closed in order for the driver's cab to function as a driver restraint system. Fabric-covered cabs (variant) with doors made of plastic or canvas do not constitute a driver restraint system and offer no protection from the consequences of the truck tipping over!

– Close the cab door before use.
– If the door is open or has been removed, use a comparably secure restraint system.
– We recommend that you always use the seat belt.

Checking the brake system for correct function

⚠ DANGER

Risk of accident in the event of failure of the brake system!

If the brake system fails, the truck will be insufficiently braked.

– Do **not** operate the truck if the brake system is faulty.

Checking the electric brake

▷

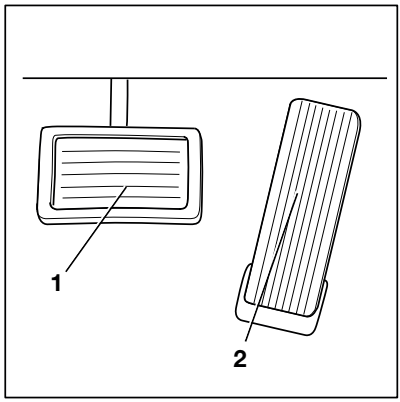

⚠ DANGER

Risk of accident if the braking effect of the electric brake is inadequate!

The braking effect of the electric brake may be insufficient for emergency braking.

– Always actuate the brake pedal (1) for emergency braking.

⚠ DANGER

Risk of accident due to excessive speed!

Depending on the charge state of the battery, regenerative braking may be insufficient when driving downhill, meaning that the maximum permissible speed of the truck is exceeded.

– Press the brake pedal (1).

If the driving speed is restricted or if the opposite drive direction is selected, the truck is braked using the electric brake.

– To actuate this, release the accelerator pedal (2).

The truck must decelerate and remain stationary.

– If the truck does not slow down, press the brake pedal (1).

Checking the service brake

– Release the parking brake.

– Press the brake pedal (1).

There must be a slight pedal clearance and then a noticeable brake pressure point.

– Accelerate the unladen truck in a clear area.

– Press the brake pedal (1) firmly.

The truck must decelerate noticeably.

Checking the parking brake on a gradient or a lorry ramp

DANGER

Risk to life if the truck rolls away!

If the parking brake is not applied, the truck could run people over.

– Do not leave the truck until the parking brake has been applied.

– Stop the truck on a steep gradient (e.g. a lorry ramp) and actuate the parking brake.

The parking brake must hold the truck on the incline.

– If the truck rolls away despite the parking brake being applied, stop the truck using the service brake.

– In an emergency, secure the truck with wedges on the downhill-facing side to prevent it from rolling away.

– Have the parking brake checked and repaired by the authorised service centre.

Checking the parking brake on a level surface

WARNING

Risk of accident from abrupt deceleration!

The truck will decelerate abruptly if the parking brake is applied.

– Fasten the seat belt.

– Use the available restraint systems.

– Find a sufficiently large and open area in which nobody will be endangered or obstructed.

– Accelerate the truck to walking speed.

– Press the emergency off switch.

NOTE

When the emergency off switch is actuated, note the following:

- *The electric brake is disabled. The truck no longer responds to the command issued by the accelerator pedal.*
- *The power steering is no longer available. Steering forces are increased due to the remaining emergency steering function.*

– Release the accelerator pedal.

– Apply the parking brake.

The truck must decelerate and remain stationary.

– If the truck only coasts and does not decelerate or decelerates only slightly, stop the truck using the service brake.

– Secure the truck with chocks so that the truck does not roll away.

– Have the parking brake checked and repaired by the authorised service centre.

Warming up the hydraulic oil at cold ambient temperatures

If the truck has been exposed to low ambient temperatures for an extended period, because it has been parked outside during winter, for example, the hydraulic oil has a low temperature. In order to ensure smooth and safe operation of the hydraulic functions, the hydraulic oil must be at operating temperature.

– Drive the truck for approximately 5 minutes and actuate the brake several times.

– Actuate all hydraulic lifting functions several times.

⚠ WARNING

Risk of short circuit and fire during continuous lifting, lowering and tilting!

If the lifting function, the lowering function or the tilt function are used against the stop for more than one minute, there is a risk of short circuit and fire.

– Use the lifting function, the lowering function or the tilt function against the stop for a maximum of one minute.

Limiting the load dynamics to load program 1 during the warm-up phase ▷

NOTE

During the warm-up phase, the load dynamics are limited to load program 1. The adjacent symbol appears on the display until the warm-up phase is complete.

Checking the steering system for correct function ▷

⚠ DANGER

If the hydraulics fail, there is a risk of accident as the steering characteristics have changed.

– Do not operate the truck if it has a defective steering system.

– Operate the steering wheel (1). The steering play while stationary must not be more than two finger widths.

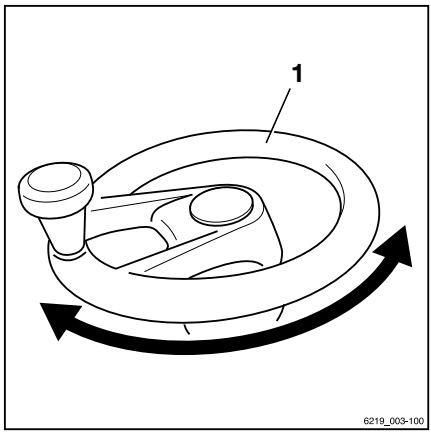

Driver's seat

Adjusting the MSG 65 and MSG 75 driver's seat

⚠ WARNING

Risk of accident from sudden adjustment of the seat or of the seat backrest!

The inadvertent adjustment of the seat or of the seat backrest can lead to uncontrolled movements by the driver. The steering or the operating devices can then be actuated unintentionally. This may cause uncontrolled movements of the truck or of the load.

– **Do not** move the seat or the seat backrest while the truck is in motion.
– Adjust the seat and the seat backrest so that all operating devices can be actuated safely.
– Ensure that the seat and the seat backrest are securely engaged.

⚠ WARNING

On some equipment variants, the amount of head clearance on the truck may be restricted.

On these specific equipment variants, the distance between the driver's head and the lower edge of the roofing sheet must be at least 40 mm.

NOTE

Observe any separate operating instructions for the seat.

⚠ WARNING

To obtain optimum seat cushioning, you must adjust the seat suspension to your own body weight. This course of action is better for your back and protects your health.

– To avoid injuries, keep the swivel area of the seat clear of objects.

Moving the driver's seat

- Raise the lever (1) and hold it in position.
- Push the driver's seat into the required position.
- Release the lever.
- Ensure that the driver's seat is securely engaged.

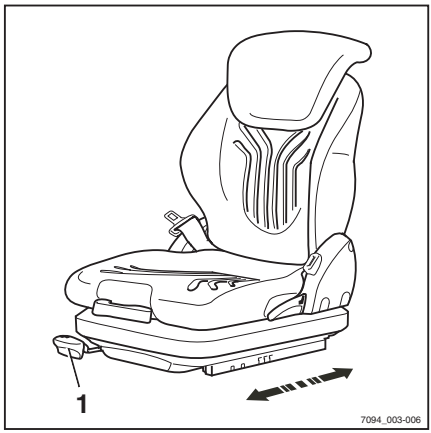

Adjusting the seat backrest

Do not apply pressure to the seat backrest when adjusting the seat backrest.

- Raise the lever (2) and hold it in position.
- Push the seat backrest into the required position.
- Release the lever.
- Ensure that the seat backrest is securely engaged.

NOTE

The backwards tilt angle of the seat backrest can be restricted by the structure of the truck.

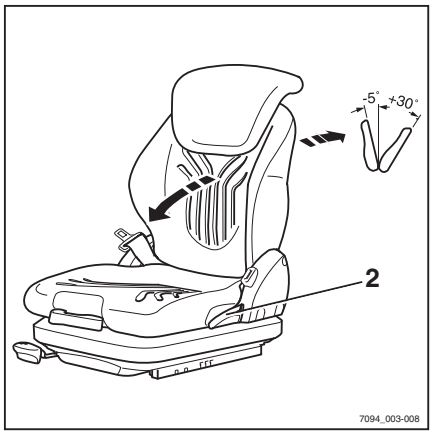

Adjusting the MSG 65/MSG 75 seat suspension ▷

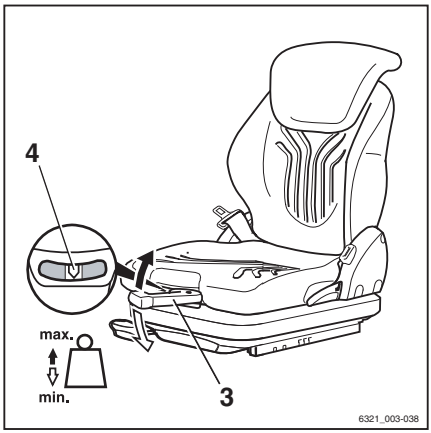

NOTE

The MSG 65/MSG 75 driver's seat is designed for people weighing between 45 kg and 170 kg. The driver's seat can be adjusted to suit the weight of the individual driver. To obtain optimal settings for the seat suspension, the driver must perform the adjustment whilst sitting on the seat.

NOTE

The MSG 75 seat is equipped with electric air suspension that is activated using an electric switch instead of the lever (3).

– Fold out the weight adjusting lever (3).
– Pump the lever up or down to set the driver's weight.
– Return the weight-adjusting lever to the initial central position each time before raising it again (a click can be heard when this position is reached).
– Retract the weight adjusting lever once the adjustment is complete.

NOTE

The correct driver's weight has been selected when the arrow (4) is in the centre position in the inspection window. Once the minimum or maximum weight setting is reached, the seat will not move any further even when you pump the weight adjusting lever.

Adjusting the MSG 75 E seat suspension

NOTE

The MSG 75 E driver's seat is designed for persons weighing between 45 kg and 160 kg. It is equipped with electrical air suspension that automatically adjusts to the driver's weight.

– Sit on the driver's seat.
– Turn the key switch to the "I" position.

The seat automatically adjusts to the driver's weight.

Adjusting the longitudinal horizontal suspension (variant)

If the driver's seat is equipped with the "longitudinal horizontal suspension" variant, impacts in the drive direction are damped by additional seat suspension. The locking lever (5) on the left-hand side of the driver's seat activates and locks the longitudinal horizontal suspension.

– To lock the longitudinal horizontal suspension, move the locking lever (5) to the left (A).

– To activate the longitudinal horizontal suspension, move the locking lever (5) to the right (B).

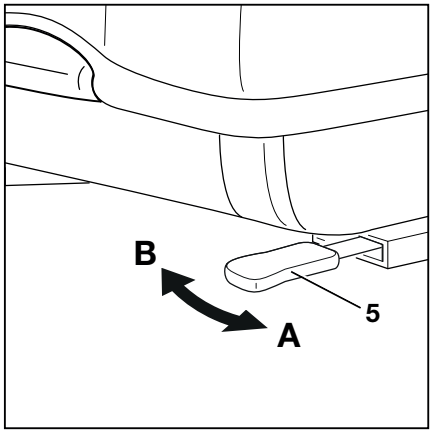

A Longitudinal horizontal suspension activated
B Longitudinal horizontal suspension blocked

NOTE

If the longitudinal horizontal suspension is blocked, the suspension comfort is significantly lower. Impacts are much more noticeable.

Adjusting the lumbar support (variant)

NOTE

The lumbar support can be adjusted to suit the contours of the individual driver's spine. Adjusting the lumbar support moves a convex support cushion into the upper or lower part of the backrest.

– Turn the turning knob (6) up or down until the lumbar support is in the required position.

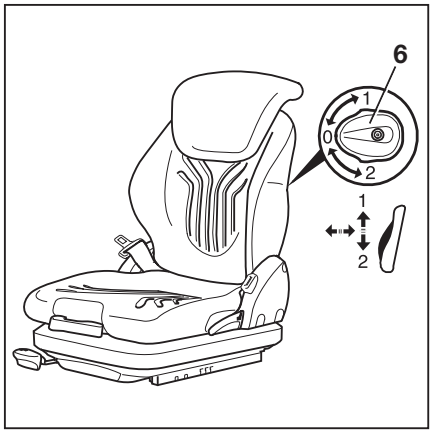

Adjusting the backrest extension (variant)

▷

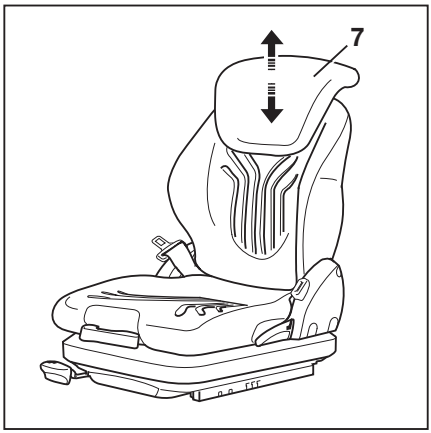

– Adjust the backrest extension (7) by pulling it out or pushing it into the desired position.

To remove the backrest extension, move it past the end stop by firmly pushing it upwards.

Switching the seat heater (variant) on and off

▷

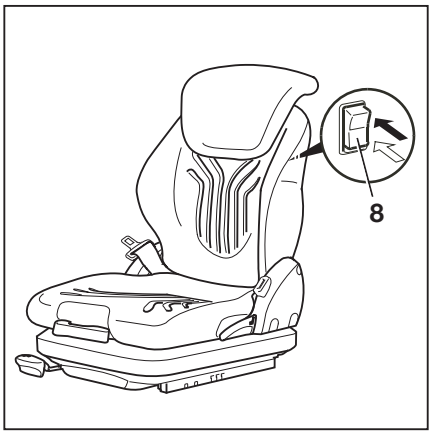

NOTE

The seat heater only works when the driver is sitting on the driver's seat.

– Switch the seat heater (8) on or off using the switch.

Seat belt

DANGER

Risk of injury if the truck tips over!

Even if an approved restraint system is in use, there is still a residual risk that the driver could be injured if the truck tips over.

This risk of injury can be reduced through the combined use of the restraint system and the seat belt.

In addition, the seat belt protects against the consequences of rear-end collisions and falling off a lorry ramp.

– Recommendation: When operating the truck on a lorry ramp, fasten the seat belt in addition to using the bracket door or the restraining bracket.

DANGER

Only bracket doors, restraining brackets and the driver's cab with closed, fixed doors constitute driver restraint systems. Plastic doors (weather protection) do not constitute a restraint system!

If the doors are open or have been removed, you must use an alternative suitable restraint system (e.g. a seat belt)!

Fastening the seat belt

▷

DANGER

Mortal danger when driving without wearing a seat belt!

If the seat belt is not fastened and the truck tips over or crashes into an obstacle, the driver can be thrown out of the truck. The driver could slide under the truck or collide with an obstacle.

– Fasten the seat belt before every trip.
– Do not twist the seat belt when fastening it.
– Only use the seat belt to secure one person!
– Have any malfunctions repaired by the authorised service centre.

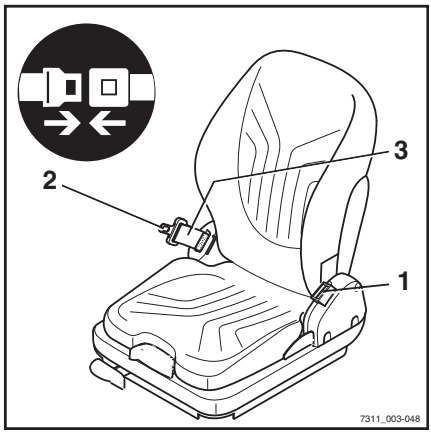

NOTE

The buckle has a buckle switch. When the belt was not fastened, the following occurred:

- *The message* `Close seat belt` *appears on the display-operating unit.*
- *The truck will not drive at speeds faster than 4 km/h.*
- *The hydraulic functions are blocked.*

NOTE

One variant prevents the truck from being driven at all if the seatbelt is not fastened. The message `Close seat belt` *appears on the display.*

– Pull the seat belt (3) smoothly out of the belt retractor and place over the thighs close to the body.

NOTE

Sit back as far as possible so that your back is resting on the seat backrest. The automatic blocking mechanism permits sufficient freedom of movement on the seat.

– Click the belt tongue (2) into the buckle (1).

– Check the tension of the seat belt. The belt must fit closely around your body.

Special feature for trucks with HSR restraint systems (variant)

If the bracket is not closed, the message `Close restraint system` appears in the display.

Fastening on a steep slope

The automatic blocking mechanism prevents the belt from being extended whenever the truck is on a steep gradient. It is no longer possible to pull the seat belt out of the belt retractor.

– Move away carefully from the slope.

– Fasten the seat belt.

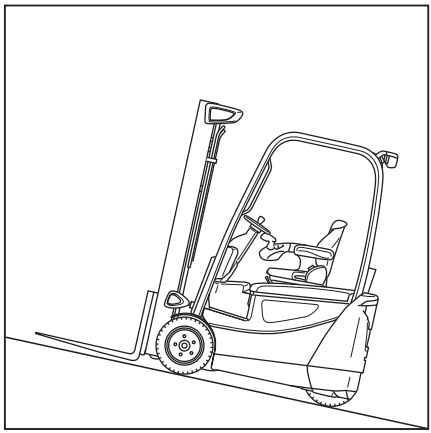

Releasing the seat belt

– Push the red button (4) on the buckle (1).

– Slowly guide the belt tongue back to the retractor by hand.

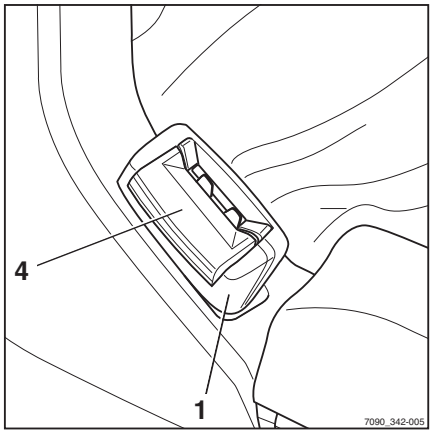

NOTE

Slowly allow the seat belt to retract. The automatic blocking mechanism may be triggered if the belt tongue strikes the housing. It will then no longer be possible to pull the seat belt out with the usual force.

– Using increased force, pull the seat belt around 10 to 15 mm out of the retractor to disengage the blocking mechanism.

– Slowly allow the seat belt to retract again.

– Protect the seat belt from dirt, for example, by covering it.

Malfunction due to cold

– If the buckle or belt retractor are frozen, thaw the buckle or the belt retractor and dry the parts.

This prevents the parts from refreezing.

⚠ CAUTION

The seat belt may be damaged by heat!

Do not subject the buckle or belt retractor to excessive heat when thawing.

– Do not use air warmer than 60°C when thawing.

Adjusting the armrest

⚠ DANGER

There is a risk of accident if the armrest lowers suddenly, causing the driver to move in an uncontrolled manner.

This may result in unintentional actuation of the steering or operating devices and thus cause the truck or load to move in an uncontrolled fashion.

– Do not adjust the armrest while driving.
– Adjust the armrest so that all operating devices can be actuated safely.
– Ensure that the armrest is securely tightened.

Adjusting the length of the armrest

– Release the star-grip handle (1) by turning to the left.
– Shift the armrest (2) into the desired position.
– Tighten the star-grip handle by turning to the right.
– Check that the armrest is firmly attached.

Adjusting the height of the armrest

– Release the hand wheel (3) by turning to the left.
– Shift the armrest (2) into the desired position.
– Tighten the hand wheel by turning to the right.
– Check that the armrest is firmly attached.

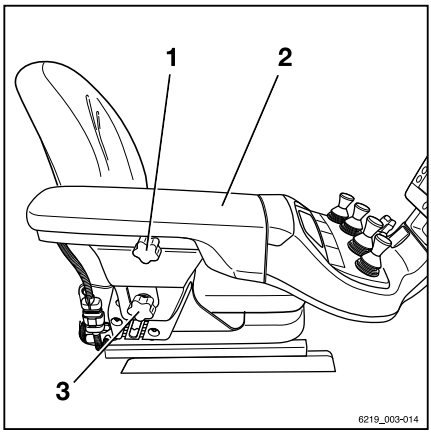

Switching on

Switching on using the key switch

⚠ WARNING

All checks and tasks required before daily use must have been performed without any defects being identified before switching on the truck.

- Perform the "visual inspections and functional checks".
- **Do not** operate the truck if defects have been detected; contact the authorised service centre.

- Insert the switch key (1) into the key switch and turn it to the "I" position. ▷

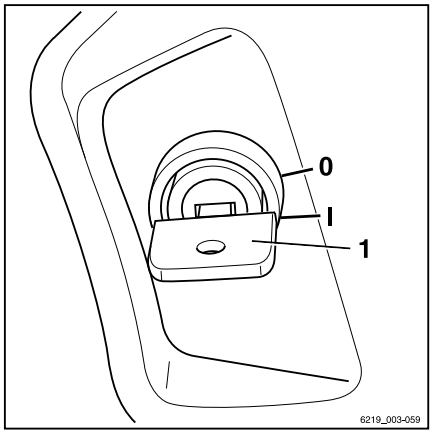

NOTE

If the truck is equipped with the "Access authorisation with PIN code" variant, the display initially changes to the input menu for access authorisation.

Once the truck is ready for operation, the main screen is shown on the display.

Main screen ▷

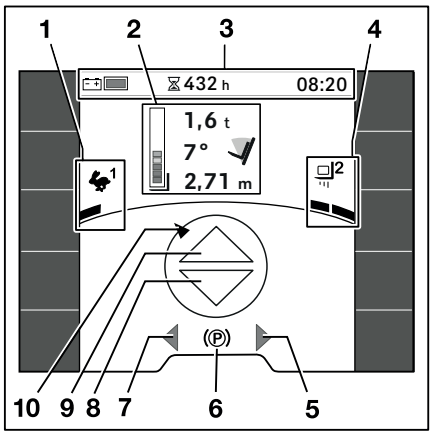

1 Selected drive programme with driving dynamics display
2 Load information (variants)
3 Status bar: battery charge, operating hours, time
4 Selected load dynamics programme with dynamics bar
5 "Right" turn indicator display
6 Driving speed or parking brake Ⓟ
7 "Left" turn indicator display
8 "Reverse" drive direction indicator
9 "Forward" drive direction indicator
10 Steering angle display

Additional information may appear on the display.

– Refer to the chapter entitled "Display messages".

NOTE

After connecting the battery, the correct charge state may not be displayed until the battery is placed under load by driving or lifting operations.

Switching on via push button (variant)

WARNING

All checks and tasks required before daily use must have been performed without any defects being identified before switching on the truck.

– Perform the "visual inspections and functional checks".

– **Do not** operate the truck if defects have been detected; contact the authorised service centre.

The "Switch on via push button" variant is available only in conjunction with the "FleetManager" or "Access authorisation with PIN code" variants. In place of the key switch, the truck has a push button (1) that is used to switch the truck on and off.

– To switch on the truck, press the push button (1) or sit on the driver's seat. A message on the display/operating unit asks the operator to place the FleetManager card in position or to enter the PIN code.

Authorisation via the "FleetManager" card or the PIN code must take place within a specified period of time:

- Within 30 seconds if the driver's seat is not occupied
- Within 60 seconds if the driver's seat is occupied

If this does not happen, the truck switches off again.

– To switch on the truck, press the push button (1) or sit in the driver's seat.

If authorisation was successful, the truck is ready for operation. The main view is shown on the display.

▷

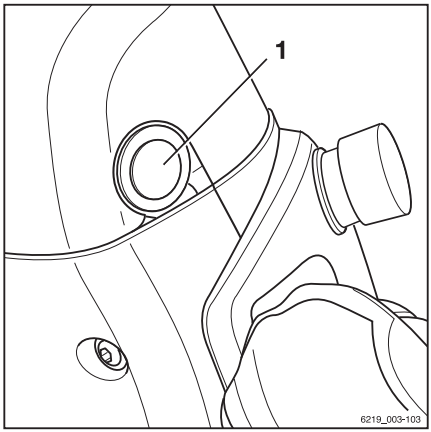

– To switch off the truck, press the push button (1) and hold for 1 second.

NOTE

For the variant with

- *"Access authorisation with PIN code", see the relevant section.*
- *"FleetManager", see the "original operating instructions for FleetManager".*

Display-operating unit

Operating the display-operating unit

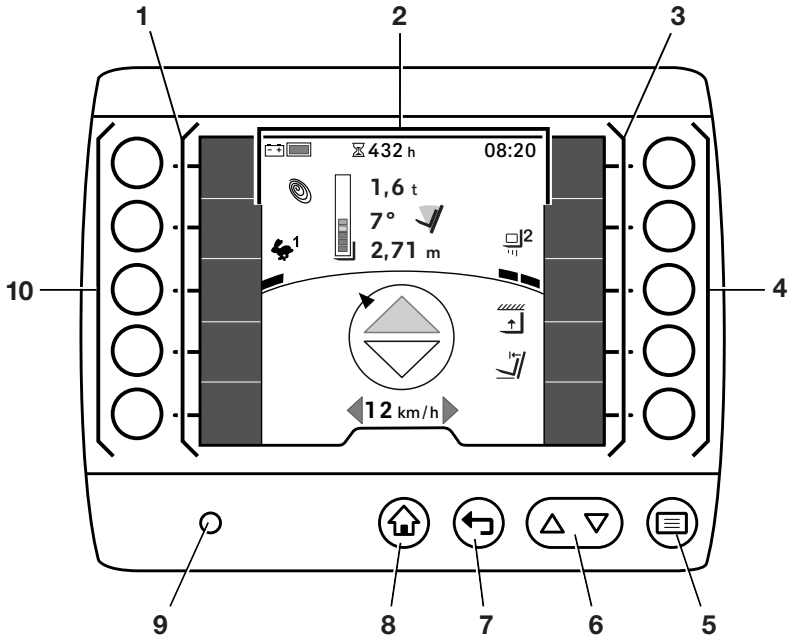

The display-operating unit is operated using the control and enter keys (5...8) and the soft-keys (4, 10). The display (2) shows information about the current driving programme, load programme and the configuration of the favourites bars (1, 3). The brightness sensor (9) automatically adjusts the brightness of the display based on the truck's surroundings.

Functions of the control and enter keys

Designation	Position	Functions
Softkeys	4, 10	The softkeys correspond to the adjacent functions or input options. If functions have been stored in the favourites bars (1, 3), these functions can be switched on and off by pressing the adjacent softkey. In addition to switching functions on and off, the soft keys on the right (3) navigate through the menu structure. These soft keys are also used to select actions.
Menu button ☰	5	The menu button ☰ opens the first level of the menu. If a deeper navigation level is currently selected, this button takes you back to the first menu level. When using the settings menus, the menu button ☰ saves input.
Scrolling buttons △ ▽	6	The scrolling buttons △ ▽ allow you to scroll up and down menu items within a menu level. This button △ clears input entered in the settings menus. This button ▽ switches between upper case and lower case for alphanumeric entries.
Back button ↩	7	When the back button ↩ is pressed, the display switches to the next menu level up. This button cancels input entered in the settings menus.
Main display button ⌂	8	Pressing the main display button ⌂ at any menu level takes you directly back to the main display.

Access authorisation with PIN code (variant)

Trucks equipped with the "Access authorisation with PIN code" variant are protected against unauthorised use by a PIN code. So that the same truck can be used by different drivers, individual PIN codes can be specified.

An initial PIN code of "11111" is preset at the factory for the first use.

NOTE

We recommend that the fleet manager changes this PIN code using their access authorisation. See also the section entitled "Access authorisation for the fleet manager (variant)".

When the key switch is switched on, the `Access authorisation` input menu appears.

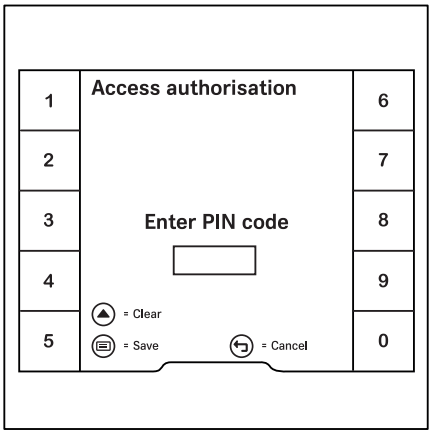

All hydraulic functions and drive functions of the truck are blocked. In the StVZO (German Road Traffic Licensing Regulations) variant, the function of the hazard warning system (variant) is guaranteed.

– To activate the blocked functions, use the softkeys to enter the PIN code.

– To confirm, push the button.

If the input was correct, the display changes to the main display. The truck is ready for use.

– If the input was incorrect, enter the PIN code again.

NOTE

The authorised service centre can configure access authorisation so that the PIN code has to be re-entered each time after someone leaves the truck.

When the driver's seat is occupied again, the message `Log in` appears. The display then changes to the "Access authorisation" input menu.

Changing the PIN codes

The fleet manager can change the PIN codes. See also the following section entitled "Access authorisation for the fleet manager (variant)".

– Activate the "Access authorisation for the fleet manager".

– Press the `Service` softkey. ▷

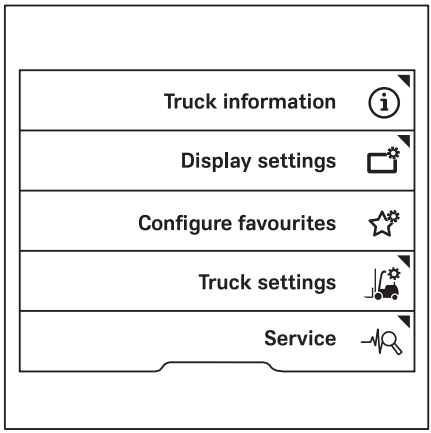

– Press the scroll keys △ ▽ until the `Change PIN codes` menu appears. ▷
– Press the `Change PIN codes` softkey.
– Follow the instructions on the display.

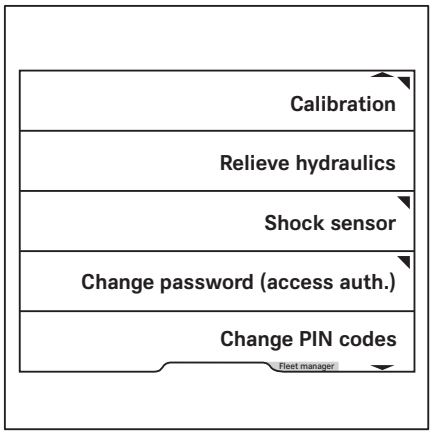

Access authorisation for the fleet manager (variant)

Trucks equipped with the "Access authorisation for the fleet manager" variant can be configured by the users themselves. Access to these settings is protected by a fleet manager password.

Three options are available for the "Access authorisation for the fleet manager" variant:

1 **No fleet manager password**
Access to the configuration menus is not enabled. If access is required at a later

date, the authorised service centre must set up a fleet manager password.

2 **Standard fleet manager password**

The standard fleet manager password is "1111".

For safety reasons, this standard fleet manager password must be changed after the first use. See also the section entitled "Changing the fleet manager password".

3 **Individual fleet manager password**

The individual fleet manager password is noted on the order confirmation and on the truck invoice.

NOTE

Access to the settings menu is only available if the truck is at a standstill and the parking brake is applied. If the parking brake is released prematurely, the settings menu will close.

– Stop the truck.

– Apply the parking brake.

– Press the button.

– Press the softkey.

The first menu level appears.

– Press the `Access authorisation` softkey .

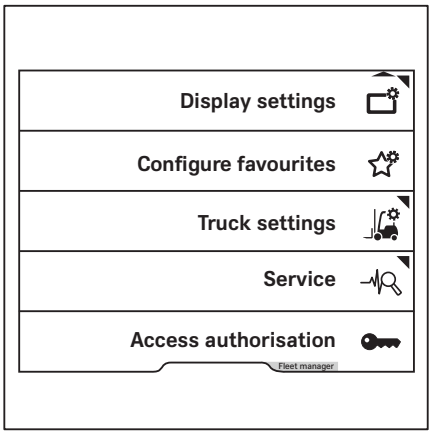

The display changes to the `Access authorisation` menu. ▷

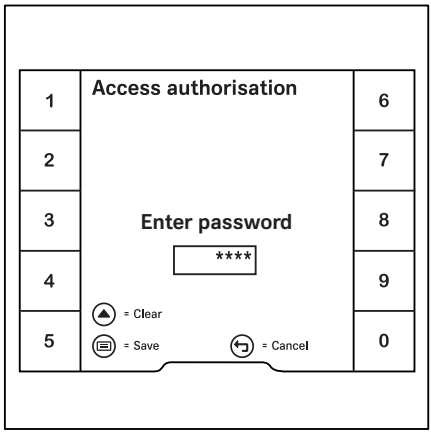

– Enter the fleet manager password using the softkeys.

– To confirm, press the ☰ button.

The message `Fleet manager access authorisation granted` ✓ appears. ▷

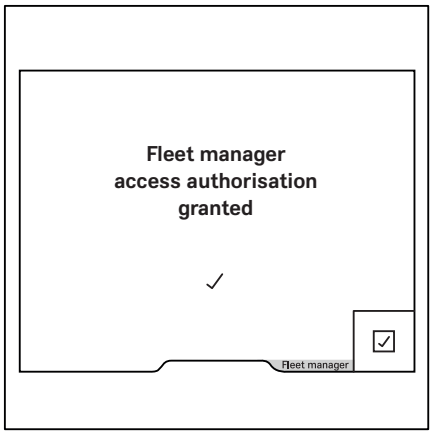

– To confirm, press the ✓ softkey.

The display returns to the settings menu.

If the password entered was incorrect, the message `Password incorrect` is displayed.

– If this happens, enter the password again.

NOTE

While the "Access authorisation for the fleet manager" is activated, `Fleet manager` *is displayed in an orange bar at the bottom of the screen. When the users switches to the main display, the access authorisation expires again.*

Changing the fleet manager password

– Activate the "Access authorisation for the fleet manager".

– Press the `Service` softkey. ▷

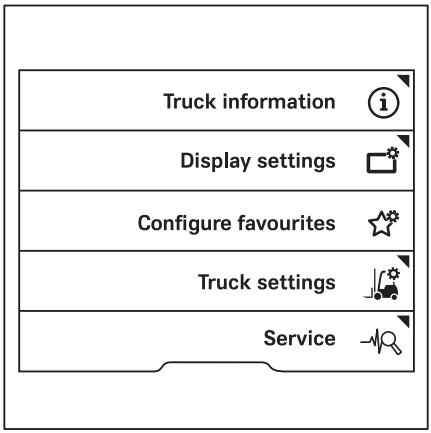

– Press the scroll buttons △ ▽ until the `Change password (access auth.)` menu appears.
– Press the `Change password (access auth.)` softkey.
– Follow the instructions on the display. ▷

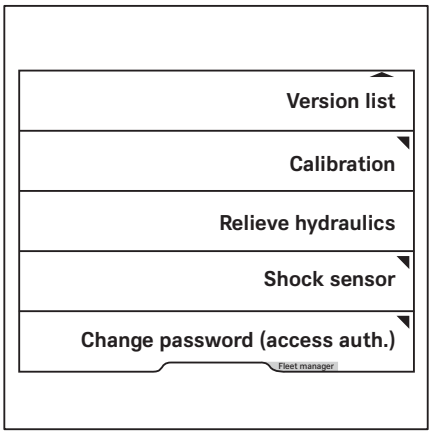

Pre-Shift Check

Description of the Pre-Shift Check (variant)

The Pre-Shift Check is a guided dialogue in the display-operating unit. It also helps the driver conduct the necessary "visual inspections and function checking" before everyday use. After the truck has been switched on, the driver must answer questions about the condition of the forklift truck with `Yes` or `No`.

While the driver is doing this, the truck functions are available with restrictions. The driving speed and hydraulic functions are restricted.

To commission the truck, the authorised service centre can compile the Pre-Shift Check from a question catalogue in consultation with the fleet manager. If a question catalogue has not been compiled, the only question stored by default is `Truck ready for operation?`

If the question is answered with "No", an entry is made in the history. No restrictions in truck function for this scenario are stored by default. The authorised service centre can replace this question with a question from the question catalogue.

In addition, the fleet manager has the following options:

- The fleet manager can view the results of all checks via the `History`.
- The fleet manager can define the shift start for three different shifts. The Pre-Shift Check must be performed when these shifts start.

  If the truck is equipped with "FleetManager", the shifts are defined on the FleetManager interface. See the relevant operating instructions.
- If, due to a negative test result, truck functions are restricted, the fleet manager can reset these restrictions.
- The fleet manager can specify the question sequence.

Process

– Switch the truck on.

The question `Truck ready for operation?` appears by default. This question is not associated with any restrictions on the truck functions. The authorised service centre can replace this question with a question from the question catalogue.

The next question appears.

Some of the questions require a functional test, such as the functional test of the lighting.

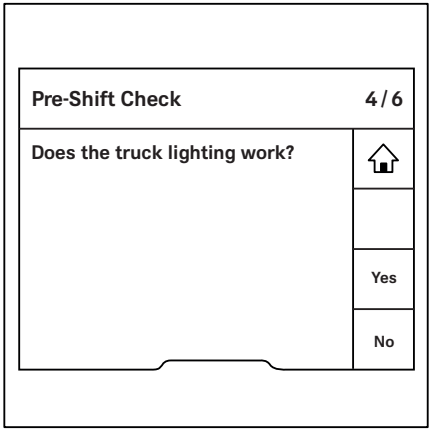

NOTE

The main display symbol appears only when it is required for the test.

– To access the main display, press the main display button or the softkey .

The main display contains the message `To complete Pre-Shift Check, press` .

This means that the Pre-Shift Check is still active and the truck functions are restricted.

– To acknowledge the message, press the ☑ softkey.

– Switch on and check the function to be tested, e.g. lighting.

– Press the back button to go back to the Pre-Shift Check.

– Answer the question based on the result of the function check.

The next question appears.

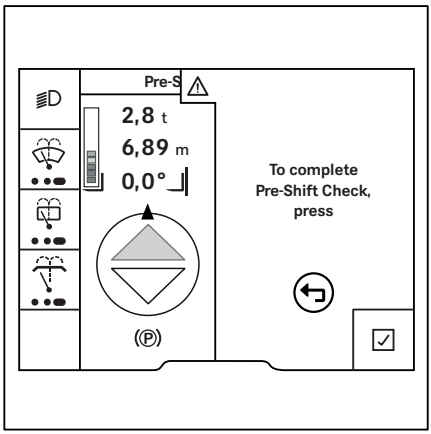

NOTE

If no questions regarding the Pre-Shift Check have been compiled, the question `Truck ready for operation?` *is displayed..*

If the truck has to be moved for a test, e.g. for a brake test, the parking brake can easily be released. The message `To complete Pre-Shift Check, press` is displayed. The truck can be moved at reduced

speed. When the parking brake is applied again, the view returns to Pre-Shift Check.

At the end of the check, truck functions are restricted if they have been adjusted as a reaction to a negative test result. The message `Pre-Shift Check truck restrictions active` shows that truck functions are restricted. As long as the truck functions are restricted, no further Pre-Shift Check is requested at the start of a new shift. The check is only requested again after the fleet manager has reset the restrictions.

All questions

NOTE

This question catalogue contains questions about different types of industrial trucks. It may therefore also contain questions that are not applicable to your industrial truck.

The authorised service centre can use this question catalogue to put together the Pre-Shift Check during commissioning:

Are the fork arms damaged (e.g. bent or cracked)?
Are the fork arms securely mounted and the locking devices undamaged?
Are the roller tracks on the lift mast and lift chassis sufficiently greased?
Are the load chains damaged?
Are the load chains sufficiently tensioned and loaded equally.?
Are all attachments securely mounted and undamaged? Are they in working order?
Are operating fluids (e.g. oil, water, fuel) visibly leaking?
Are the wheels damaged? Are they worn beyond permissible limits?
Is the tyre pressure correct?
Is the overhead guard visibly damaged?
Is the entry area or footwell dirty or slippery?
Are the windows clean, free of ice and undamaged?
Are the maintenance lids securely closed?
Is the battery door/hood undamaged and securely closed?
Is the battery lock present, undamaged and closed?
Is the battery connection assembly dirty or damaged (e.g. housing deformed, contacts corroded)?
Is the towing device damaged?

Is the capacity rating plate present, undamaged, and legible?
Is the driver restraint system damaged?
Does the horn work?
Does the truck lighting work?
Do the warning lights work?
Is the antistatic belt present and does it have sufficient contact with the floor?
Is the corona electrode present and clean?
Does the parking brake work properly?
Does the service brake work properly?
Does the steering work properly?
Does the emergency off work?
Is the battery dirty or obviously damaged?
Are all decal information and adhesive labels present and legible?
Is the load backrest undamaged?
Does the accelerator pedal work properly?
Is the engine compartment dirty or does it contain foreign objects?
Are the lift mast or the fork carriage obviously damaged?
Do the working hydraulics work properly according to the labelling?
Are the mirrors dirty or damaged?
Is the gas tank or its mounting obviously damaged?
Can unusual noises be heard when the industrial truck is used?
Is there any other obvious damage to the truck?
Does the washer system work?
Is the bonnet undamaged and securely closed?

If no Pre-Shift Check questions have been compiled, the initial configuration as at the time of delivery appears.

Defining the question sequence

The questions for the Pre-Shift Check can be defined in a random sequence or in a fixed sequence.

The random sequence is advisable, because the questions are then read more consciously by the driver. This means that there is no routine aspect.

– Activate the "Access authorisation for the fleet manager".

– Press the `Service` softkey. ▷

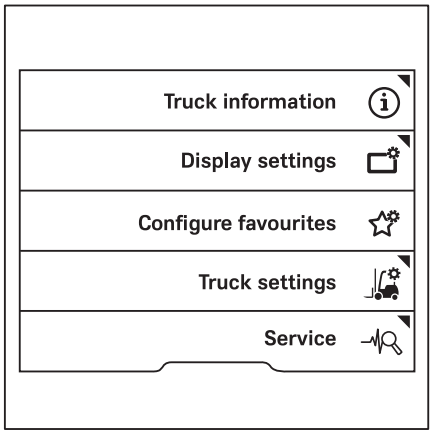

– Press the scroll keys △ ▽ until the `Pre-Shift Check` menu appears. ▷
– Press the `Pre-Shift Check` softkey.

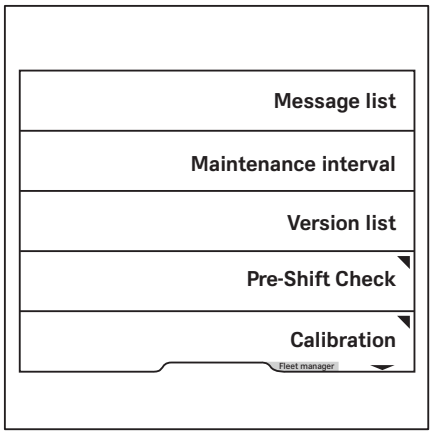

The `Pre-Shift Check` menu appears. ▷

– Press the `Question sequence` softkey.

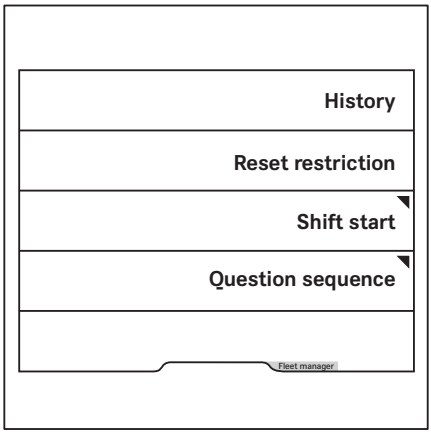

Pressing the softkey allows fixed or random question sequences to be selected. ▷

The orange activation bar displays the current selection.

– To access the main display, press the main display button ⌂.

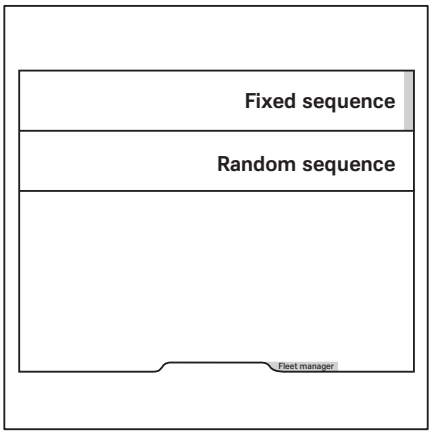

Displaying the history

The fleet manager can display a Pre-Shift Check history.

– Activate the "Access authorisation for the fleet manager".

– Press the `Service` softkey. ▷

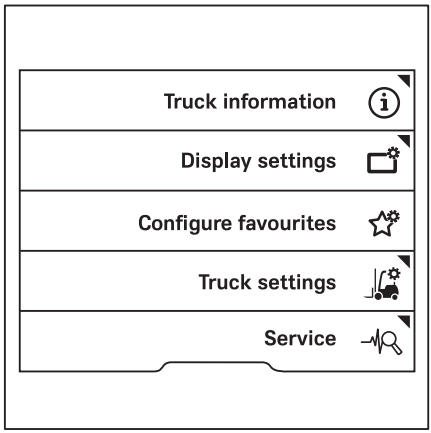

– Press the scroll keys △ ▽ until the `Pre-Shift Check` menu appears. ▷
– Press the `Pre-Shift Check` softkey.

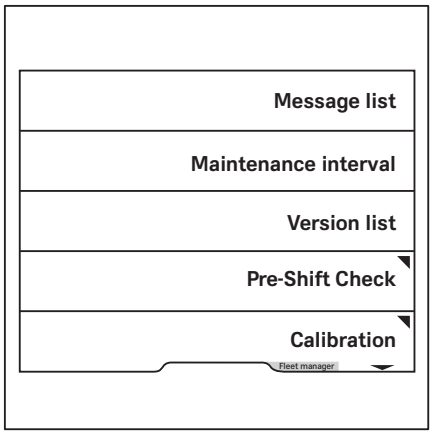

The `Pre-Shift Check` menu appears. ▷

– Press the `History` softkey.

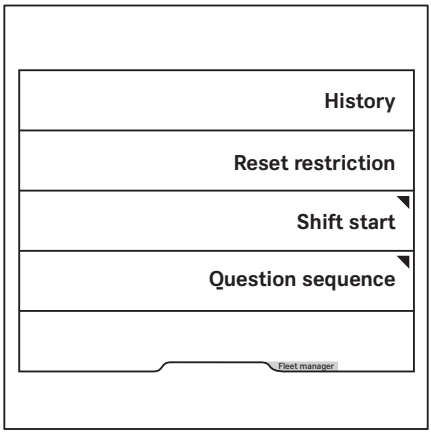

The Pre-Shift Check `results` display opens. ▷

This display shows all checks and questions that have been answered with the date and time.

To see more results, press the scroll buttons △ ▽.

– To go back to the previous menu, press the ☑ softkey.

– To access the main display, press the main display button ⌂.

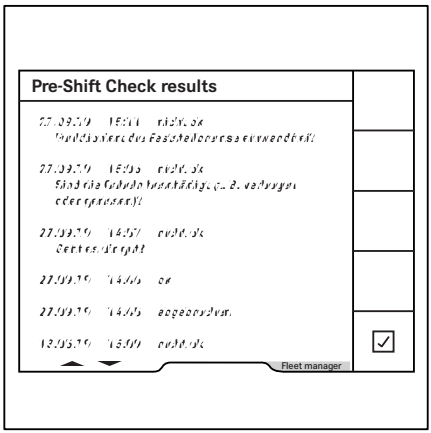

Defining the shift start

As a standard setting after commissioning, the Pre-Shift Check is always requested 24 hours after the last check was performed. The fleet manager can define up to three shifts and their start times. The Pre-Shift Check is then always requested at this time.

NOTE

If the truck is equipped with the "FleetManager" variant, the shifts are defined on the FleetManager interface. See the relevant operating instructions.

– Activate the "Access authorisation for the fleet manager".

– Press the `Service` softkey. ▷

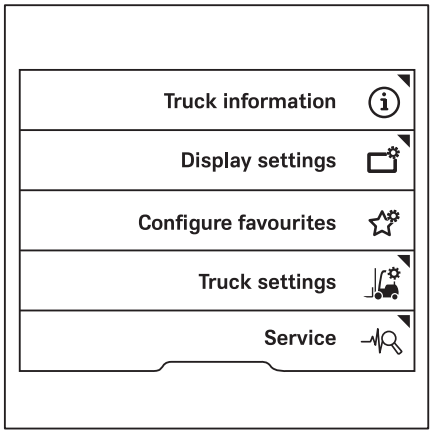

– Press the scroll keys △ ▽ until the `Pre-Shift Check` menu appears.

– Press the `Pre-Shift Check` softkey. ▷

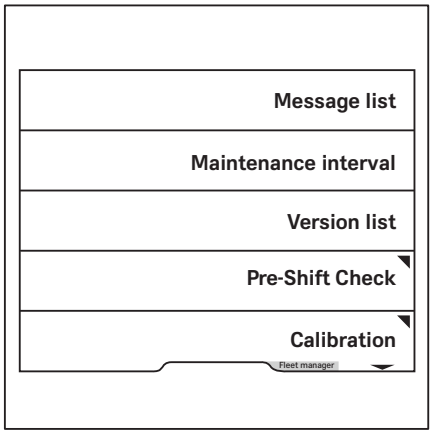

The `Pre-Shift Check` menu appears. ▷

– Press the `Shift start` softkey.

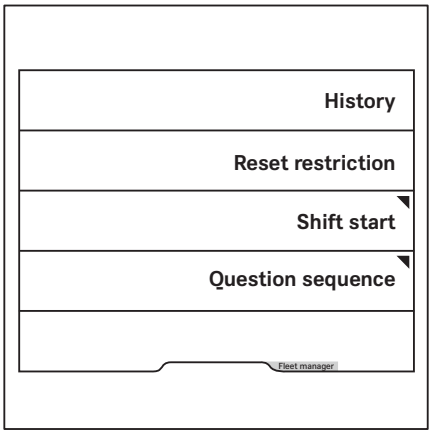

In this menu, you can call up the shift to be defined and its start time. ▷

The orange activation bar indicates which shifts are activated.

– To edit a shift, press the corresponding soft-key.

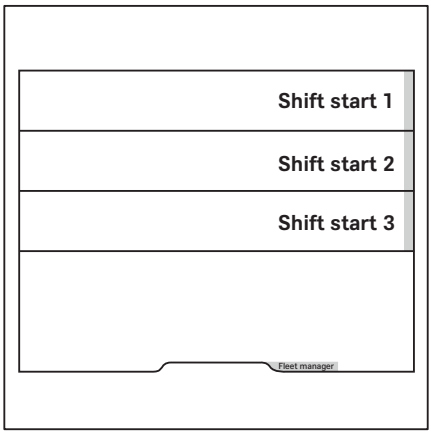

In this menu you can define the shift start. ▷

– Enter the time using softkeys `0 to 9`.

– To `save`, press the ☰ button.

The shift start is now defined. The Pre-Shift Check is always requested from this shift start time.

The display reverts to the previous menu.

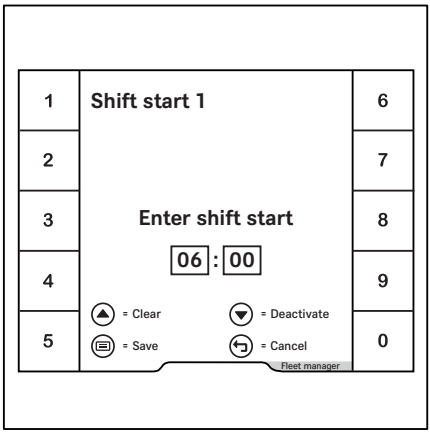

– To deactivate a certain shift start, select the relevant shift. ▷

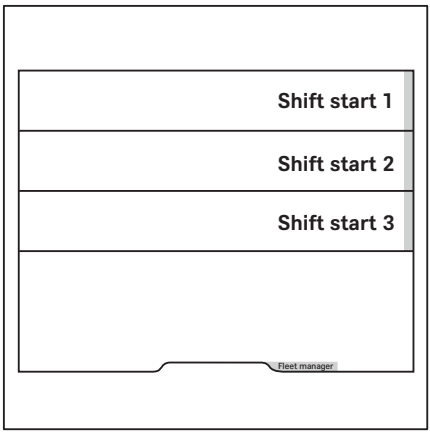

– Press the ▽ scroll button to deactivate the shift. ▷

– To confirm, press the button.

The time is shown in grey.

The shift is deactivated. The display reverts to the previous menu. There is no activation bar next to this shift.

– To `cancel`, press the back button.

– To access the main display, press the main display button.

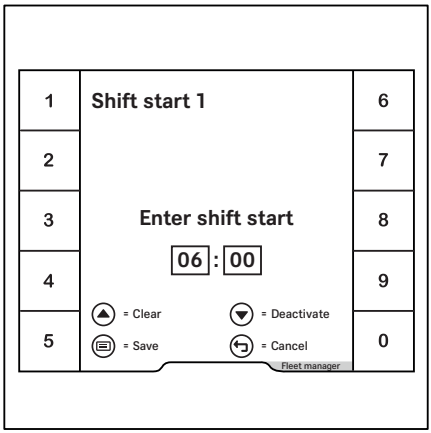

Resetting the truck restrictions

If truck functions are restricted due to checks with a bad result, the fleet manager can reset these restrictions. The fleet manager can also do this if a previously detected problem has been rectified.

– Activate the "Access authorisation for the fleet manager".

– Press the `Service` softkey. ▷

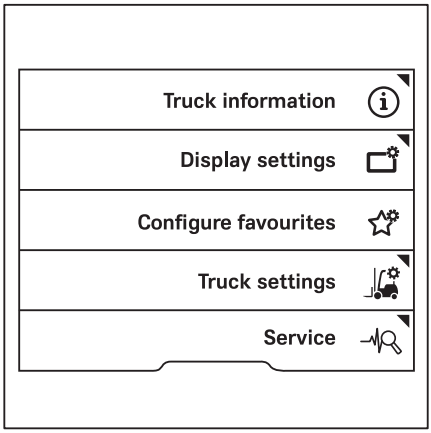

– Press the scroll keys △ ▽ until the `Pre-Shift Check` menu appears.
– Press the `Pre-Shift Check` softkey.

▷

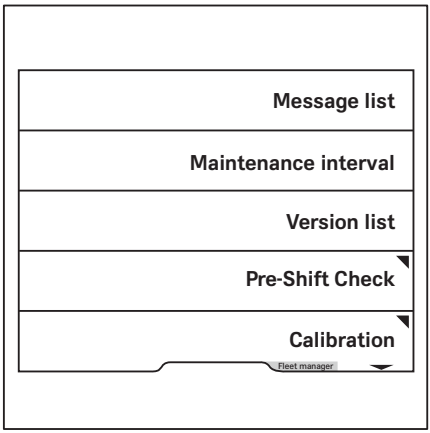

The `Pre-Shift Check` menu appears.
– Press the `Reset restriction` softkey.

▷

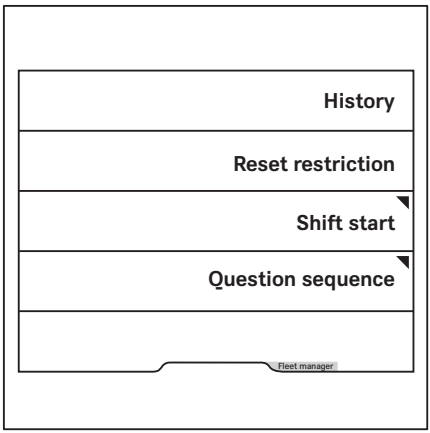

A question pops up asking if you want to reset the truck restrictions. ▷

– To confirm, press the ☑ softkey.

The full scope of the truck functions is now available. The display reverts to the previous menu.

– To cancel, press the ☒ softkey.

The truck functions remain restricted. The display reverts to the previous menu.

– To access the main display, press the main display button ⌂.

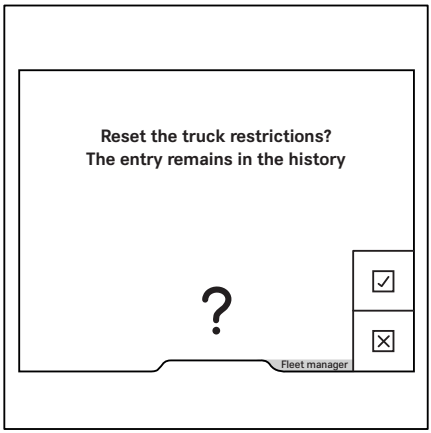

Driver profiles

Driver profiles (variant)

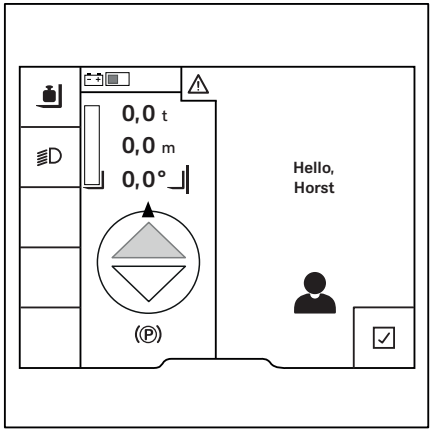

This variant allows up to ten individual driver profiles to be created. The driver is greeted with the selected name after logging in. Once the ✓ softkey is pushed, the main display appears.

If the truck is equipped with the "Access authorisation with PIN code" or "FleetManager" variants, these driver profiles can be linked to the respective variant.

The driver profile allows the following settings to be saved:

- Language
- Favourites
- Configuration of the status line
- Configuration of drive programmes A and B

In addition, the operating statuses saved for the last selected driver profile are called up again the next time a user logs in with this driver profile:

- Selected drive programme 1 to 3
- Load dynamics
- Sprint mode

If a driver without an existing driver profile logs in using the "Access authorisation with PIN code" or "FleetManager" variants, a driver profile is generated. This driver profile corresponds to the settings when the truck was delivered.

If the truck is not equipped with these variants, drivers must select their profiles manually.

Any changes that drivers make to the settings while they are logged in are saved. These will then be available the next time that the driver logs in.

Selecting driver profiles

If the truck is equipped with the "Access authorisation with PIN code" or "FleetManager" variants, the corresponding driver profile is active after logging in. If the truck is not equipped with these variants, drivers must select their profiles manually.

NOTE

Access to the settings menu is only available if the truck is at a standstill and the parking brake is applied. If the parking brake is released prematurely, the settings menu will close.

– Stop the truck.

– Apply the parking brake.

– Press the button.

– Press the softkey.

– Press the `Driver profiles` softkey .

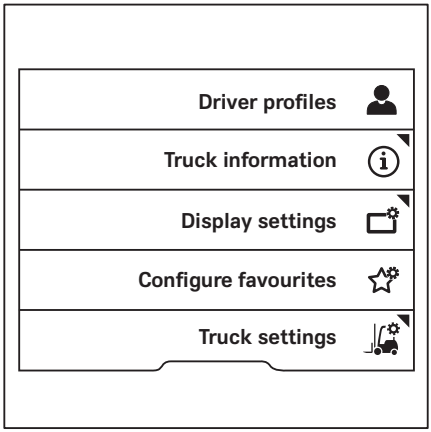

The orange activation bar displays the current selection.

– Press the softkey for the required driver profile.

The driver profile is active. The driver is greeted with the selected name the next time that the truck is switched on.

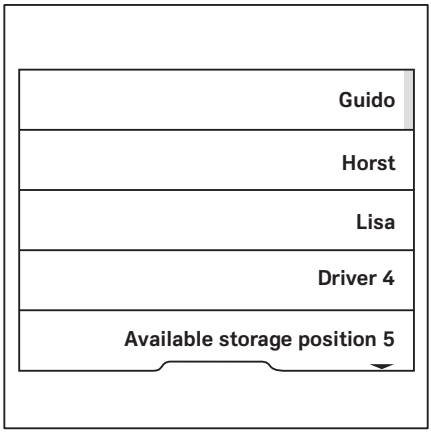

Creating driver profiles

Both the fleet manager and the driver can create up to ten driver profiles.

NOTE

If the truck is equipped with the "Access authorisation with PIN code" or "FleetManager" variants, the driver profile is generated automatically when logging in for the first time.

– Apply the parking brake.

– Press the button.

– Press the softkey.

– Press the `Driver profiles` softkey.

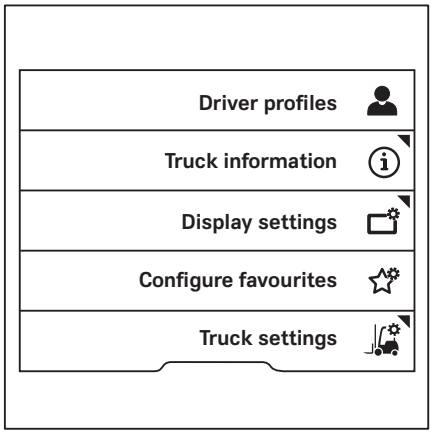

This menu provides storage space for saving ten driver profiles.

– Press the softkey for the required storage location.

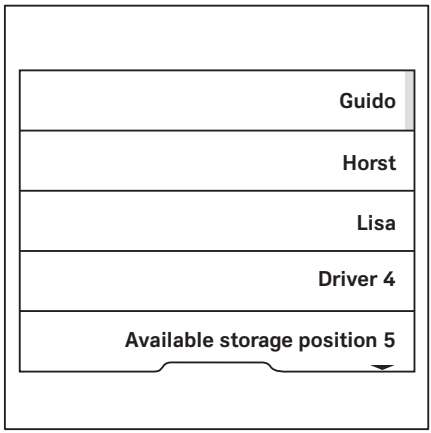

NOTE

Unoccupied storage locations that do not contain a driver profile are indicated by `Available storage position`.

The `Driver name` menu is displayed. ▷

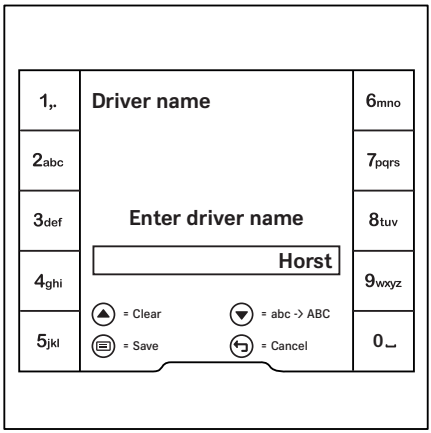

– Use the softkeys to enter the desired name.

– To confirm, press the ☰ button.

The driver profile is active. The driver is greeted with the selected name after the next log-in.

Any changes that drivers make to the settings while they are logged in are saved. These will then be available the next time that the driver logs in.

Renaming driver profiles

Driver profiles can be renamed. Drivers can only rename their own driver profile. The fleet manager has access authorisation to rename all driver profiles.

Renaming by the driver

– Apply the parking brake.

– Press the ☰ button.

– Press the ⚙ softkey.

– Press the `Truck settings` softkey.

– Press the `Rename driver profiles` softkey. ▷

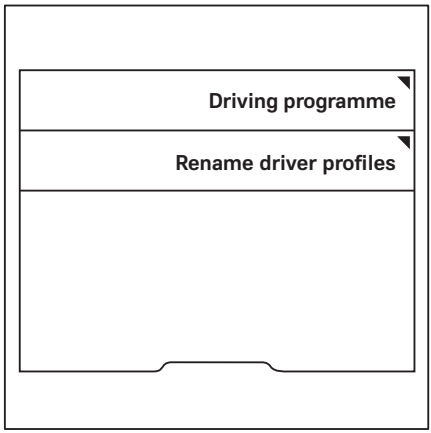

The `Driver name` menu is displayed. ▷

– Use the softkeys to enter the desired name.

– To confirm, press the button.

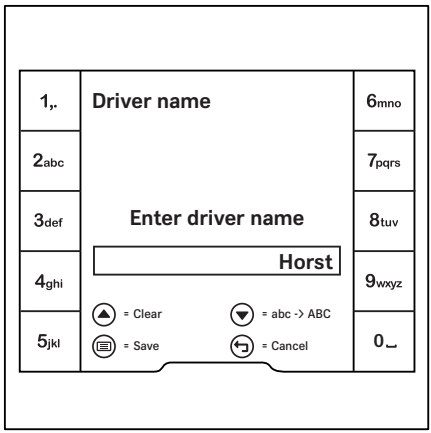

Renaming by the fleet manager

– Activate the "Access authorisation for the fleet manager".

– Press the `Truck settings` softkey.

– Press the `Manage driver profiles` softkey. ▷

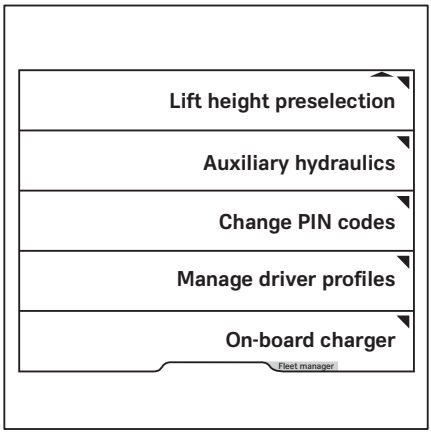

– Press the `Rename driver profiles` softkey. ▷

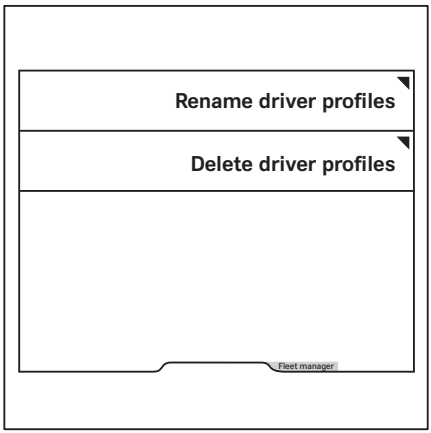

The `Driver name` menu is displayed. ▷

– Use the softkeys to enter the desired name.

– To confirm, press the ☰ button.

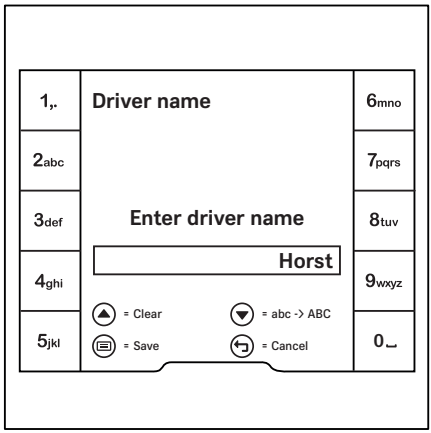

Deleting driver profiles

The fleet manager has access authorisation to delete driver profiles.

– Activate the "Access authorisation for the fleet manager".

– Press the `Truck settings` softkey ⚙.

– Press the `Manage driver profiles` softkey. ▷

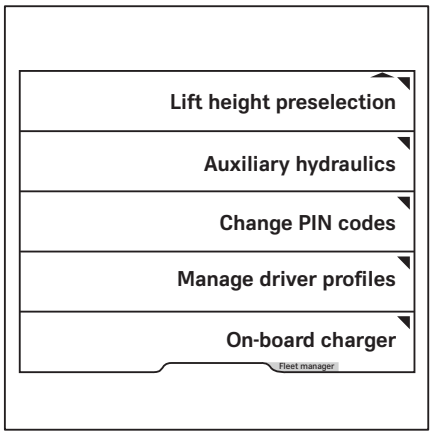

– Press the `Delete driver profiles` ▷ softkey.

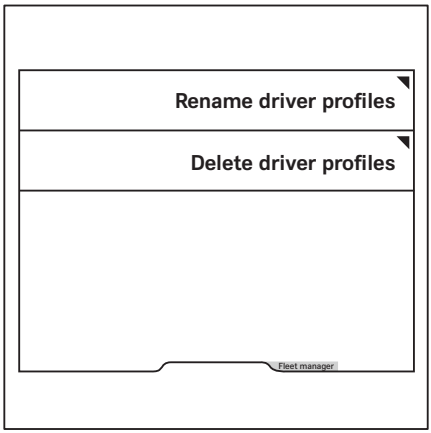

– Press the softkey for the driver profile to be ▷ deleted.

The driver profile is deleted.

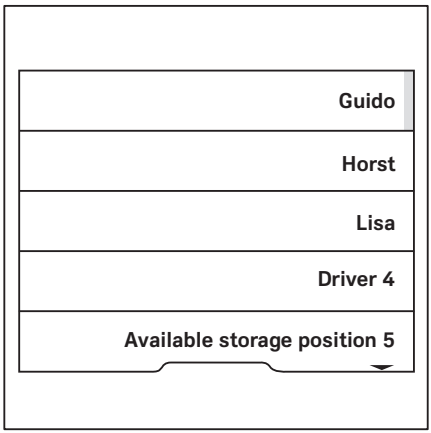

Lighting

Retrofitting lighting equipment

NOTE

All of the lighting equipment described below can be retrofitted by the authorised service centre.

– Contact the authorised service centre with regard to this matter.

Meaning of the symbols ▷

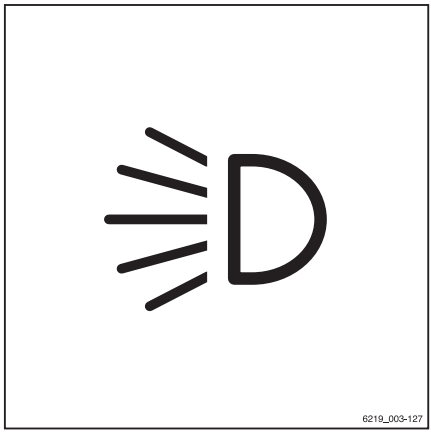

Individual lighting devices are switched on and off using the "Lighting" sub-menu.

– To access this sub-menu, push the button ☰.

Symbols for the lighting and their meanings

	Parking light
	Headlights
	Hazard warning system[1]
	Rotating beacon
	STILL SafetyLight
	Warning zone light
	Front working spotlights
	Rear working spotlights
	Roof working spotlights

Only the symbols of the lighting devices that are installed in the truck can be selected. When one of the lighting devices is switched on, the activation bar next to the relevant symbol lights up orange.

NOTE

If the truck is equipped with the "StVZO" (German Road Traffic Licensing Regulations) variant, the hazard warning system works even when the truck is switched off.

1 This function is not available if the truck is equipped with the "StVZO" (German Road Traffic Licensing Regulations) variant. In this case, the hazard warning system is switched on and off via the hazard warning button on the steering column. For more information, refer to the section entitled "Hazard warning system".

Driving lights

▷

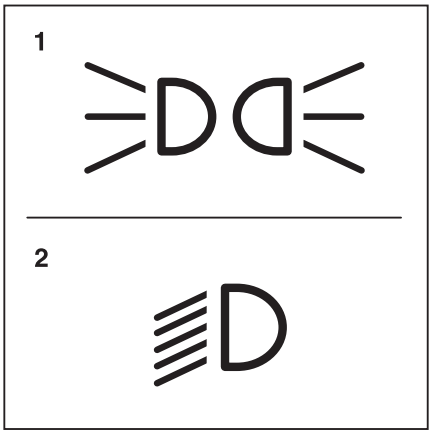

1 Parking light
2 Driving light

– To switch on the parking light (1), push the associated Softkey on the display-operating unit.

The front side lights and the tail lights light up.

– To switch on the driving light (2), press the associated Softkey on the display-operating unit.

The headlights and tail lights light up. If the truck has StVZO (German Road Traffic Licensing Regulations) equipment (variant) and a licence plate lamp, then this also lights up.

– To switch off the driving light (2), press the Softkey again.

The driving light and licence plate lamp go out.

– To switch off the parking light (1), push the Softkey again.

The front side lights and the tail lights go out.

If the truck does not have StVZO (German Road Traffic Licensing Regulations) equipment (variant), then the parking light and driving light can be switched on and off independently of each other.

Working spotlights

Front and rear working spotlights

– To switch on the front working spotlights (3), push the associated Softkey on the display-operating unit.

The front working spotlights light up.

– To switch off the front working spotlights (3), push the Softkey again.

The front working spotlights go out.

– To switch on the rear working spotlights (4), push the associated Softkey on the display-operating unit.

The rear working spotlights light up.

– To switch off the rear working spotlights (4), push the Softkey again.

The rear working spotlights go out.

NOTE

For the StVZO (German Road Traffic Licensing Regulations) variant, the parking light is also switched on when the working spotlights are switched on. The licence plate lamp (if present) is also switched on when the forward-facing working spotlights are switched on.

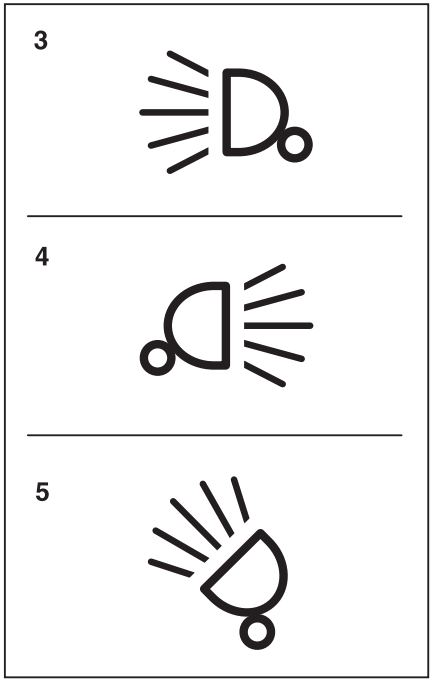

3 Front working spotlights
4 Rear working spotlights
5 Roof spotlights

Working spotlights on the roof and the side of the lift mast

The roof spotlights light up the working area when the fork carriage is raised.

– To switch on the roof spotlights (5), push the associated Softkey on the display-operating unit.

The roof spotlights (5) light up.

– To switch off the roof spotlights (5), push the Softkey again.

The roof spotlights (5) go out.

NOTE

Depending on the configuration, the roof spotlights automatically switch on when the fork carriage is raised.

Working spotlight for reverse travel (variant)

In this equipment variant, a working spotlight for reverse travel is fitted on the rear of the overhead guard and provides optimum illumination of the roadway during reverse travel.

– Press the softkey.

The activation bar next to the symbol lights up. The working spotlight does not yet light up.

– Set the drive direction to "Reverse".

The working spotlight for reverse travel lights up.

If the drive direction is set to "Forward", the working spotlight goes out.

Turn indicators

The turn indicators are switched on and off via the travel direction selector and indicator module.

▷

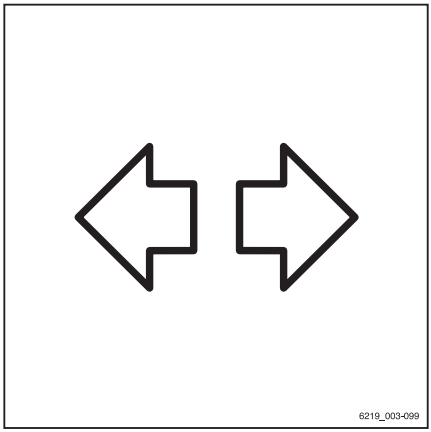

– To switch on the left or right turn indicator, move the lever (1) to the desired direction. ▷

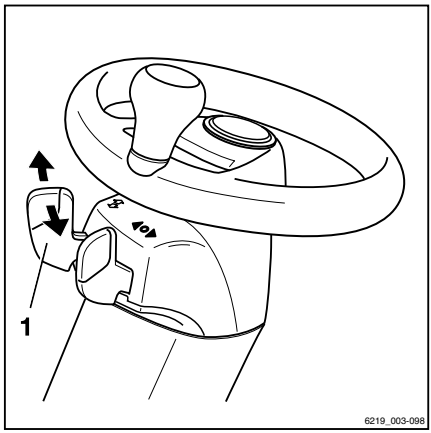

The turn indicators and the turn indicator display (2) or (3) on the display-operating unit flash. ▷

– To switch off the turn indicators, push the lever (1) back to the centre position.

All turn indicators and the turn indicator displays on the display/operating unit stop flashing.

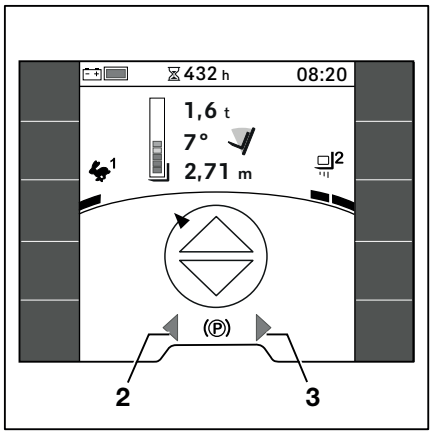

Hazard warning system

Switching the hazard warning system on and off is different for trucks with and without the StVZO (German Road Traffic Licensing Regulations) variant.

– To switch on the hazard warning system, push the associated Softkey on the display-operating unit.

All direction indicators and the turn indicator displays on the display-operating unit flash.

– To switch off the hazard warning system, push the Softkey again.

All direction indicators and the turn indicator displays on the display-operating unit stop flashing.

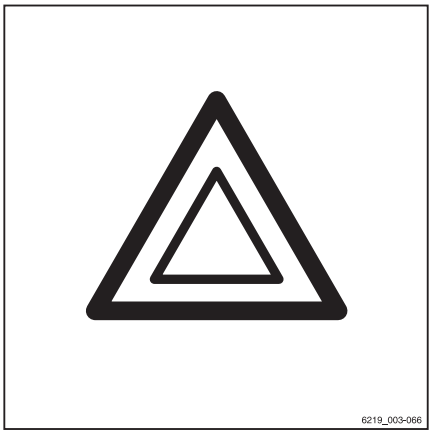

Specific features of the StVZO (German Road Traffic Licensing Regulations) variant

For the StVZO (German Road Traffic Licensing Regulations) variant, the hazard warning system cannot be switched on and off via the display/operating unit. It is switched on and off using the hazard warning button on the steering column. The hazard warning system in this variant works even when the truck is switched off.

– To switch on the hazard warning system, push the hazard warning button (1). When the truck is switched off, press and hold the hazard warning button for approx. one second.

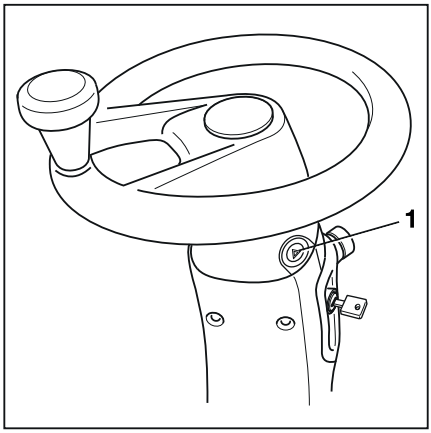

The turn indicators and the turn indicator displays (2, 3) on the display-operating unit flash. ▷

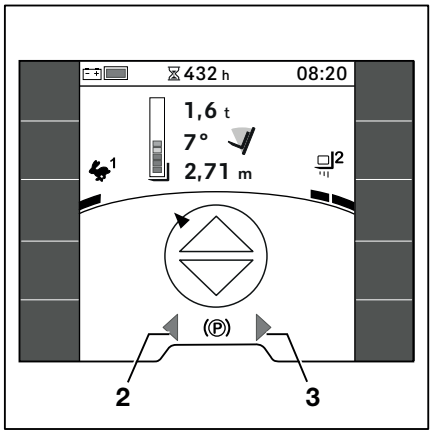

– To switch off the hazard warning system, push the hazard warning button (1) again.

All direction indicators and the turn indicator displays on the display-operating unit stop flashing.

StVZO equipment ▷

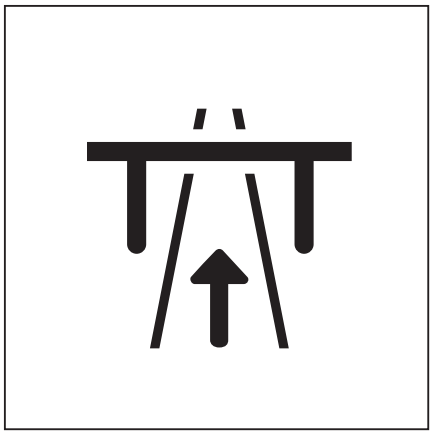

If the truck is fitted with StVZO (German Road Traffic Licensing Regulations) equipment, the softkey is stored in the favourites bar. This softkey is used to switch off all lighting devices that are not permitted on roads subject to German traffic regulations (StVO).

This relates to the following variants of lighting equipment:

- STILL SafetyLight and STILL SafetyLight 4Plus
- Warning zone light and warning zone light plus
- Working spotlight
- Rotating beacon

– To switch this lighting equipment off, press the softkey.

The orange activation bar lights up next to the softkey.

– To switch this lighting equipment on, press the softkey again.

The orange activation bar goes out.

NOTE

This function is configured for German traffic regulations (StVO) ex works.

- *Outside of Germany, observe the national regulations for the country of use.*
- *The authorised service centre can amend the function so that fewer lighting devices or more lighting devices are switched off.*

The softkey is also located in the `Driving` menu .

Rotating beacon

– To switch on the rotating beacon, push the associated Softkey on the display-operating unit.

The rotating beacon is switched on.

– To switch off the rotating beacon, push the Softkey again.

The rotating beacon goes out.

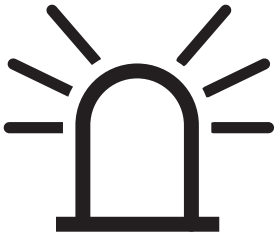

6219_003-067

STILL SafetyLight® and STILL SafetyLight 4Plus® (variants)

WARNING

Danger of damage to eyes from looking into the STILL SafetyLight® and STILL SafetyLight 4Plus®.

Do **not** look into the STILL SafetyLight® or STILL SafetyLight 4Plus®.

STILL SafetyLight® and STILL SafetyLight 4Plus® are visual warning units designed to enable early detection of trucks in driving areas with low visibility (such as drive lanes, high racks), as well as at blind junctions. The STILL SafetyLight® or

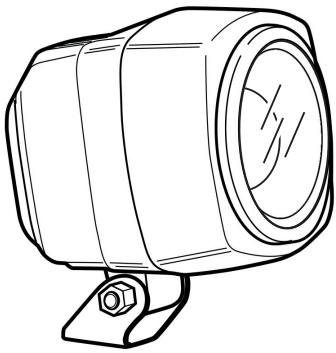

6219_003-110

STILL SafetyLight 4Plus® is mounted on a support on the overhead guard such that it is not affected by jolts and vibrations.

Depending on the version, the STILL Safety-Light® projects one or more light-blue light spots in front of or behind the truck and thus warns others about the approaching truck. With the STILL SafetyLight 4Plus®, several light blue light spots are projected as a chase light. The chase light indicates the location of the truck with its direction of travel.

Depending on the configuration of the truck, the STILL SafetyLight® or STILL Safety-Light 4Plus® automatically switches itself on when the truck is moving. This means that, during reverse travel (variant), for example, it can be used as an additional light for the working spotlight for reverse travel. The STILL SafetyLight® or the STILL Safety-Light 4Plus® can also be switched on and off on the display-operating unit.

– To do so, press the softkey.

NOTE

If the truck is to be operated on public roads, the STILL SafetyLight® and the STILL Safety-Light 4Plus® must be switched off.

Warning zone light and warning zone light plus (variants)

WARNING

Danger of damage to eyes from looking into the warning zone light.

Do **not** look into the warning zone light (plus).

Adjust the warning zone light (plus) so as not to dazzle bystanders or the driver when climbing in and out of the truck.

The warning zone light and the warning zone light plus are mounted on supports on the overhead guard such that it is not affected by jolts and vibrations.

Lighting

The warning zone light projects a light bar next to the truck on both the left-hand side and right-hand side of the truck or even behind the truck. This light bar indicates the danger areas to the sides or rear of the truck while in operation. See the section entitled "Danger area" in the chapter entitled "Handling loads". ▷

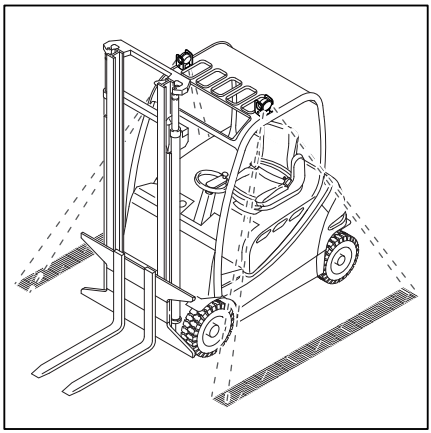

The warning zone light plus projects a semi-circle around the truck. This light bar indicates the danger areas to the sides and rear of the truck while in operation. See the section entitled "Danger area" in the chapter entitled "Handling loads". ▷

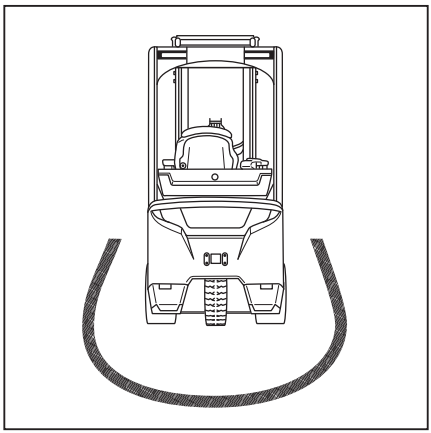

The warning zone light (plus) switches on and off again together with the truck.

If the truck has StVZO (German Road Traffic Licensing Regulations) equipment, the warning zone light (plus) can be switched on and off via the display-operating unit.

– To do so, press the softkey.

NOTE

If the truck is to be operated on public roads, the warning zone light must be switched off.

– Before using the truck, make sure that the warning zone light is working and has been adjusted correctly.

The distance from the light bar to the truck must be between 70...75 cm.

– To adjust the warning zone light, see the section entitled "Adjusting the warning zone light" in the chapter entitled "Preserving operational readiness".

When ordering the truck, you can choose between a blue or red warning zone light (plus).

Efficiency and drive modes

STILL Classic and sprint mode ▷

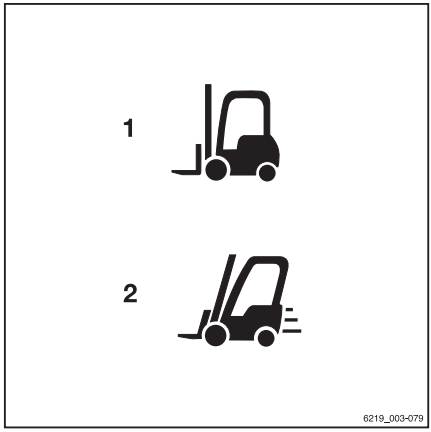

The drive modes affect the handling of the truck.

Two different drive modes are available:

1 **STILL Classic**
This mode is the reduced acceleration setting and provides a balance between hydraulic functions and driving functions. The maximum speed is 12.5 km/h. No symbol is shown on the display.

2 **Sprint mode**
This mode is active after the truck has been switched on. In sprint mode, the truck accelerates more quickly to a maximum speed of 12.5 km/h. This mode also increases the lifting speed. Sprint mode is for driving on clear and spacious terrain. The symbol indicating a (2) is shown on the display.

NOTE

If sprint mode is used, the truck's energy consumption is higher. The battery is therefore discharged more quickly. The drive units heat up more quickly.

Switching sprint mode on and off

– To switch on sprint mode, push the associated softkey.

The "sprint mode" symbol (2) appears on the display of the display-operating unit. Sprint mode is switched on.

– To switch off the mode, push the softkey again.

The symbol disappears and the mode is switched off. The truck is then back in STILL Classic mode.

Automatic switch off for sprint mode

If the truck is operated in sprint mode at the maximum performance level, the truck will consume more energy. As a result, the battery is discharged faster and the traction drives and energy supply may become too hot.

Efficiency and drive modes

The battery voltage and the temperature of the traction drives and energy supply are monitored continuously. If under voltage (does not apply to lithium-ion batteries) or overheating occurs, sprint mode is automatically deactivated.

If the truck is automatically switched off due to under voltage, sprint mode can then only be switched on again if the following conditions are met:

- The battery is fully recharged.
- The truck has been restarted.

If the truck is automatically switched off due to overtemperature, sprint mode can then only be switched on again when the drive units have cooled down.

Driving

Safety regulations when driving

Driving conduct

The driver must follow the public rules of the road when driving in company traffic.

The speed must be appropriate to the local conditions.

For example, the driver must drive slowly around corners, in tight passageways, when driving through swing-doors, at blind spots, or on uneven surfaces.

The driver must always maintain a safe braking distance from vehicles and persons in front, and must always have the truck under control. Stopping suddenly, turning quickly and overtaking at dangerous or blind spots must be avoided.

– Initial driving practice must be carried out in an empty space or on a clear roadway.

The following are forbidden during driving:

- Allowing arms and legs to hang outside the truck
- Leaning the body over the outer contour of the truck
- Climbing out of the truck
- Moving the driver's seat
- Adjusting the steering column
- Releasing the seat belt
- Disabling the restraint system
- Raising the load higher than 300 mm above the ground (with the exception of manoeuvring processes during the placement into stock/removal from stock of loads)
- Using electronic devices, for example radios, mobile phones etc.

⚠ WARNING

The use of multimedia and communication equipment as well as playing these devices at an excessive volume during travel or when handling loads can affect the operator's attention. There is a risk of accident!

– Do not use devices during travel or when handling loads.

– Set the volume so that warning signals can still be heard.

⚠ WARNING

In areas where use of mobile phones is prohibited, use of a mobile phone or radio telephone is not permitted.

– Switch off the devices.

Visibility when driving

The driver must look in the drive direction and have a sufficient view of the driving lane.

Particularly for reverse travel, the driver must be sure that the driving lane is clear.

When transporting goods that impair visibility, the driver must drive the truck in reverse.

If this is not possible, a second person acting as a guide must walk in front of the truck.

In this case the driver must only move at walking pace and with extra care. The truck must be stopped immediately if eye contact with the guide is lost.

Rear-view mirrors are only to be used for observing the road area behind the truck and not for reverse travel. If visual aids (mirror, monitor) are necessary to achieve sufficient visibility, it is necessary to practise using them. For reverse travel using visual aids, extra care should be taken.

When using attachments, special conditions apply; see the chapter entitled "Fitting attachments".

Any glass (variant, e.g. windscreen) and mirrors must always be clean and free of ice.

Roadways

Dimensions of roadways and aisle widths

The following dimensions and aisle width requirements apply under the specified conditions to ensure safe manoeuvring. In each case, a check must be performed to determine whether a larger aisle width is necessary, e.g. in the case of deviating load dimensions, attachments, lift masts and tow couplings.

Within the EU, "Council Directive 89/654/EEC concerning the minimum safety and health requirements for the workplace" must be observed. The respective national guidelines apply for areas outside the EU.

The required aisle widths depend on the dimensions of the load.

Required aisle widths with pallet

Model	Type	Aisle width [mm]	
		With pallet 1000x1200 crosswise	With pallet 800x1200 lengthwise
RXE-10	5510	2911 mm	3035 mm
RXE-13	5513	3073 mm	3197 mm
RXE-15	5515	3127 mm	3251 mm
RXE-16C	5516	3162 mm	3286 mm

Only use the truck on roadways that do not have excessively tight curves, excessively steep gradients or excessively narrow or low entrances.

Driving on gradients

⚠ WARNING

Risk of accident due to the drive unit switching off!

Driving up and down long gradients can cause the drive unit to overheat and switch off. The truck will then no longer decelerate when the accelerator pedal is released and will coast.

Driving up and down long gradients that are steeper than 15% is not permitted due to the minimum specified braking values.

– Consult the authorised service centre before driving on long ascending and descending gradients greater than 15%.

The top and bottom of the gradient must feature smooth and gradual transitions to prevent the load from falling to the ground or the truck being damaged.

– Drive on slopes at reduced speed. Adjust the speed to the gradient.

Warning in the event that components protrude beyond the truck contour

Trucks are often required to drive through very narrow or very low spaces such as aisles or containers. The dimensions of the trucks are designed for this purpose. However, movable components may protrude beyond the truck contour and be damaged or torn off. Such components include, for example, a folding roof panel.

Condition of the roadways

Roadways must be sufficiently firm and even. The surface must be free from contamination and fallen objects.

Drainage channels, level crossings and similar obstacles must be evened out and, if necessary, ramps must be provided so that trucks can drive over these obstacles with as few bumps as possible.

Take note of the load capacity of manhole covers, drain covers etc.

There must be sufficient distance between the highest points of the truck or the load and the fixed elements of the surrounding area. The height is based on the overall height of the lift mast and the dimensions of the load; see the chapter entitled "Technical data".

Rules for roadways and the working area

It is only permitted to drive on routes authorised for traffic by the operating company or its representatives. Traffic routes must be free from obstacles. The load must only be set down and stored in the designated locations. The operating company and its representatives must ensure that unauthorised third parties do not enter the working area.

NOTE

Please observe the definition of the following responsible person: "operating company".

Hazardous areas

Hazardous areas on roadways must be indicated by standard traffic signs or, if necessary, by additional warning signs.

Selecting drive programmes 1 to 3 ▷

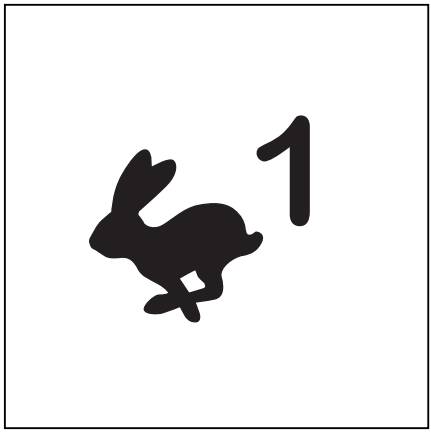

The truck has three drive programmes with different preset driving and braking characteristics. The basic principle is that the higher the number of the drive programme selected, the greater the driving dynamics.

The drive programme is selected using the display-operating unit under the `Drive` menu item.

– Press the 1... softkey to select the desired drive programme. 3

– If the drive programmes are saved as a favourite on a softkey, press the softkey until the number of the desired drive programme is shown on the display. ▷

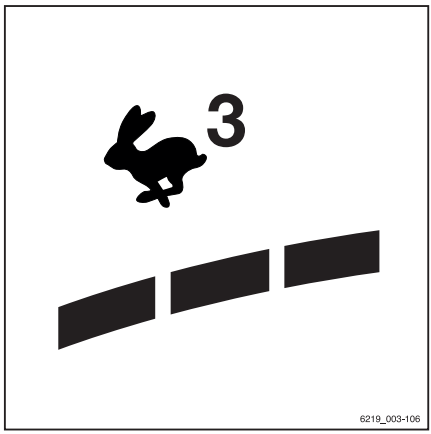

The number of dynamic bar segments indicates the driving dynamics of the selected drive programme.

Selecting drive programme A or B

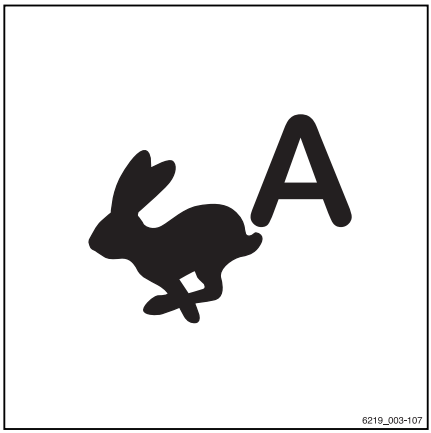

The truck has two driving programmes for personalised handling and braking characteristics.

Unlike the fixed drive programmes "1 to 3", the programs "A" and "B" can be configured. The procedure for this is described in the following section.

The drive programme is selected using the display-operating unit under the `Drive` menu item.

– Press the A or B softkey to select the desired drive programme.

– If the drive programmes are saved as a favourite on a softkey, press the softkey until the letter of the desired drive programme is shown on the display.

Configuring drive programmes A and B

The drive programmes can be configured by the driver.

NOTE

Access to the settings menu is only available if the truck is at a standstill and the parking brake is applied. If the parking brake is released prematurely, the settings menu will close.

– Stop the truck.

– Apply the parking brake.

– Press the button.

The first menu level appears.

– Press the softkey.

– Press the `Truck settings` softkey.

– Press the `Drive programmes` softkey.

The `drive programme` menu appears.

– Press the associated softkey for `drive programme A` or `drive programme B`.

Configuration of the drive programmes using `drive programme A` is explained here.

The **`Setdrive programme A`** menu appears. ▷

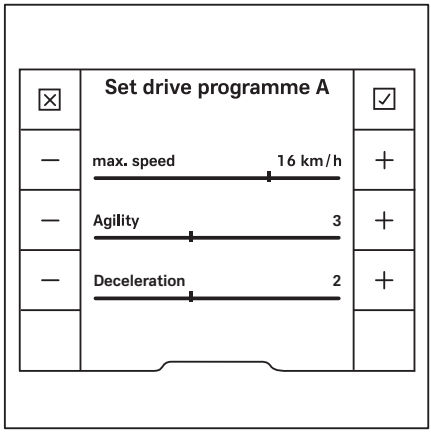

The following parameters can be set:

- `Max. speed`
  Determines the maximum speed (varies depending on the truck model).
- `Agility`
  Determines the acceleration behaviour and the reversing behaviour using five levels.
  `1` indicates the lowest agility and `5` indicates the greatest agility
- `Braking`
  Determines the electrical brake retardation when the accelerator pedal is released in five stages.
  `1` indicates the lowest delay and `5` indicates the greatest delay

– To select a higher stage, press the ＋ softkey.

– To select a lower stage, press the − softkey.

– To save the setting, press the ☑ softkey.

The settings are saved.

– To cancel the setting, press the ☒ softkey.

The settings return to the most recently saved value.

Press the ↰ button once to return to the previous menu level without saving the changes.

Selecting the drive direction ▷

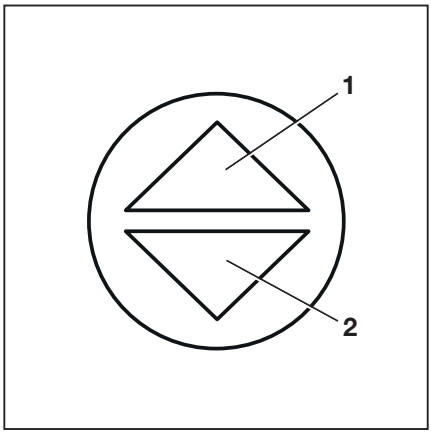

The drive direction of the truck must be selected using the drive direction switch/drive direction selection lever before attempting to drive. The method of actuating the drive direction switch/drive direction selection lever depends on the operating devices that are fitted in the truck.

The drive direction switch is located on the operating devices for the hydraulic functions. The drive direction selection lever is located on the travel direction selector and indicator module (variant).

NOTE

The drive direction can also be changed during travel. Your foot can remain on the accelerator pedal while you do so. The truck is then decelerated and accelerated again in the opposite direction (reversing).

The indicator for the selected drive direction ("forwards" (1) or "backwards" (2)) lights up on the display-operating unit.

Neutral position

If leaving the truck for a prolonged period, the neutral position must be selected in order to avoid the truck suddenly moving off due to an inadvertent actuation of the accelerator pedal.

– Briefly select the drive direction switch/drive direction selection lever for the direction opposite to the current drive direction.

The drive direction indicator on the display-operating unit goes out.

NOTE

When the seat is vacated, the selected drive direction is set to the "neutral position". To drive, the drive direction switch/drive direction selection lever must be actuated again.

Actuating the drive direction switch with the multiple-lever version

▷

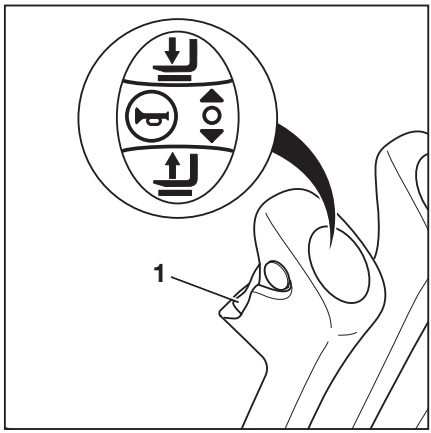

– For the "forwards" drive direction, push the drive direction switch (1) downwards.

– For the "backwards" drive direction, push the drive direction switch (1) upwards.

NOTE

If the drive direction switch (1) is defective and the truck stops in a danger area, the drive direction selection lever on the travel direction selector and indicator module (variant) can be used for emergency driving. Refer to the section entitled "Emergency driving via the drive direction switch/drive direction selection lever" in the chapter entitled "Procedure in emergencies".

Actuating the drive direction switch with the mini-lever version

▷

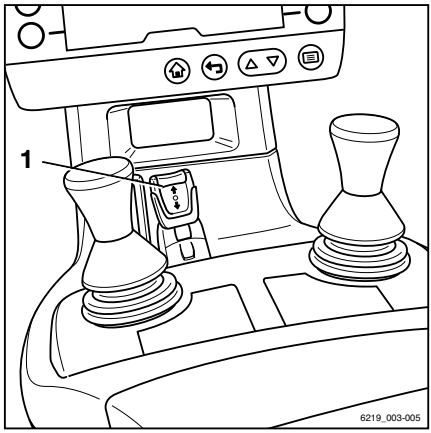

– For the "forwards" drive direction, push the drive direction switch (1) forwards.

– For the "backwards" drive direction, pull the drive direction switch (1) backwards.

NOTE

If the drive direction switch (1) is defective and the truck stops in a danger area, the drive direction selection lever on the travel direction selector and indicator module (variant) can be used for emergency driving. Refer to the section entitled "Emergency driving via the drive direction switch/drive direction selection lever" in the chapter entitled "Procedure in emergencies".

Actuating the drive direction switch with the Fingertip version ▷

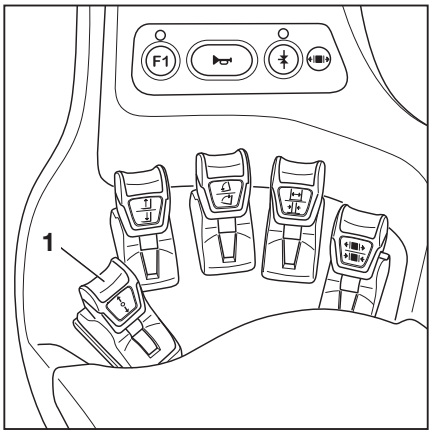

– For the "forwards" drive direction, push the drive direction switch (1) forwards.

– For the "backwards" drive direction, pull the drive direction switch (1) backwards.

NOTE

If the drive direction switch (1) is defective and the truck stops in a danger area, the drive direction selection lever on the travel direction selector and indicator module (variant) can be used for emergency driving. Refer to the section entitled "Emergency driving via the drive direction switch/drive direction selection lever" in the chapter entitled "Procedure in emergencies".

Actuating the vertical rocker button for the "drive direction" with the Joystick 4Plus version ▷

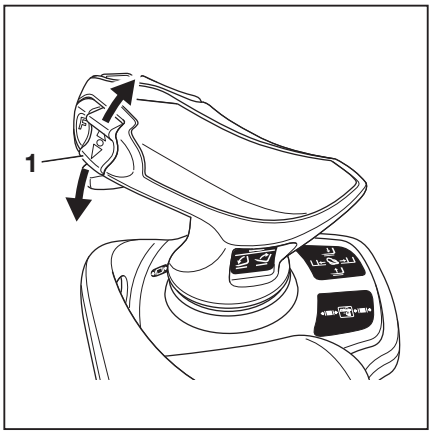

– For the "forwards" drive direction, push the vertical rocker button for the "drive direction" (1) upwards.

– For the "backwards" drive direction, push the vertical rocker button for the "drive direction" (1) downwards.

NOTE

If the drive direction switch (1) is defective and the truck stops in a danger area, the drive direction selection lever on the travel direction selector and indicator module (variant) can be used for emergency driving. Refer to the section entitled "Emergency driving via the drive direction switch/drive direction selection lever" in the chapter entitled "Procedure in emergencies".

Actuating the drive direction selection lever with the travel direction selector and indicator module version ▷

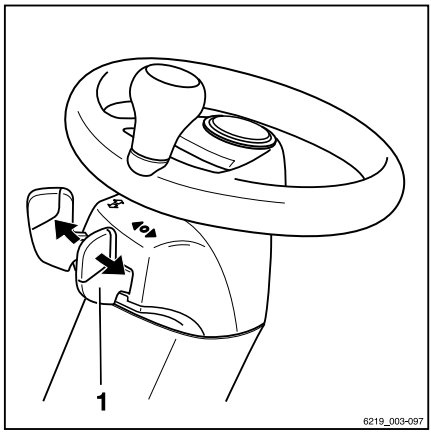

– For the "forwards" drive direction, push the drive direction selection lever (1) forwards.

– For the "backwards" drive direction, push the drive direction selection lever (1) backwards.

Alternatively, the drive direction can also be selected using the drive direction switches on the operating devices for the hydraulic functions.

NOTE

If the drive direction selection lever (1) is defective and the truck stops in a danger area, the drive direction switch on the operating device for the hydraulic functions can be used for emergency driving. Refer to the section entitled "Emergency driving via the drive direction switch/drive direction selection lever" in the chapter entitled "Procedure in emergencies".

Starting drive mode

DANGER

Being trapped under a rolling or tipping truck could cause fatal injuries!

– Sit on the driver's seat.

– Fasten the seat belt.

– Activate the available restraint systems.

– Observe the information in the chapter entitled "Safety regulations when driving".

The driver's seat is equipped with a seat switch. This seat switch checks whether the driver's seat is occupied. If the driver's seat is not occupied or if the seat switch is malfunctioning, the truck cannot be moved. All lifting functions are disabled. In these situations, the message `Sit on driver's seat` is shown on the display of the display-operating unit.

– Sit on the driver's seat. Fasten the seat belt.

– Lift the fork carriage until the necessary ground clearance is achieved.

– Tilt the lift mast backwards.

– Release the parking brake.

– Select the desired drive direction.

The indicator for the selected drive direction ("forwards" (1) or "reverse" (2)) lights up on the display-operating unit. ▷

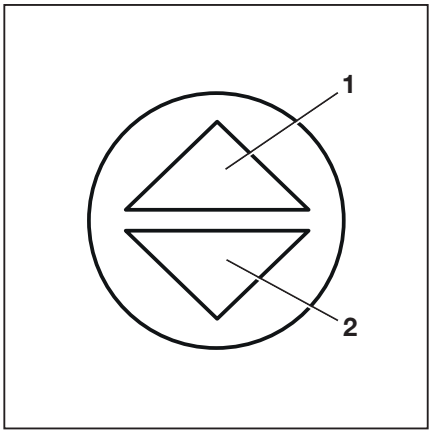

NOTE

Depending on the equipment, the following variants of warning units for reverse travel may be present:

- *An acoustic signal will be heard.*
- *The STILL SafetyLight lights up.*
- *The hazard warning system flashes.*

– Press the accelerator pedal (3). ▷

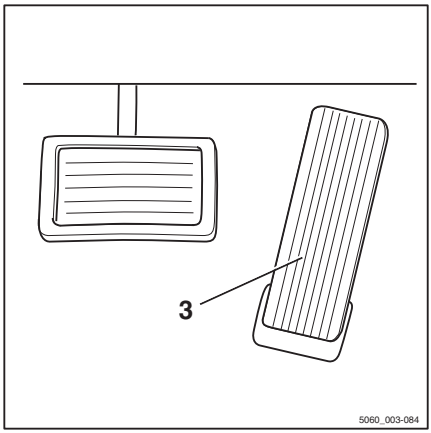

The truck travels in the selected drive direction. The speed is controlled by the accelerator pedal position. The truck brakes when the accelerator pedal is released.

NOTE

The truck is also held in place on ascending or descending gradients even if the electric parking brake is not engaged.

DANGER

Risk of accident due to brake failure!

The regenerative brake only functions if the truck is switched on, the emergency off switch has not been actuated and the parking brake is released.

– Use the brake pedal if the regenerative brake malfunctions.

– Engage the parking brake before leaving the truck.

Changing the drive direction

– Take your foot off the accelerator pedal.

– Select the desired drive direction.

– Press the accelerator pedal.

The truck will travel in the selected drive direction.

NOTE

The drive direction can also be changed during travel. Your foot can remain on the accelerator pedal while you do so. The truck is then decelerated and accelerated again in the opposite direction (reversing).

NOTE

If an electrical fault occurs in the accelerator, the drive unit is switched off. In this situation, the truck is not electrically braked. Once the electrical fault has been corrected, it will be possible to drive the truck again by releasing the accelerator pedal and then actuating the accelerator pedal again. If the truck still cannot be operated, park the truck securely and contact the authorised service centre.

Starting drive mode, dual pedal version (variant)

DANGER

Being trapped under a rolling or tipping truck could cause fatal injuries!

– Sit on the driver's seat.

– Fasten the seat belt.

– Activate the available restraint systems.

– Observe the information in the chapter entitled "Safety regulations when driving".

The driver's seat is equipped with a seat switch. This seat switch checks whether the driver's seat is occupied. If the driver's seat is not occupied or if the seat switch is malfunctioning, the truck cannot be moved. All lifting functions are disabled. In these situations, the message `Sit on driver's seat` is shown on the display of the display-operating unit.

– Sit on the driver's seat. Fasten the seat belt.

– Lift the fork carriage until the necessary ground clearance is achieved.
– Tilt the lift mast backwards.
– Release the parking brake.
– Press the right accelerator pedal (1) for the "forwards" drive direction and press the left accelerator pedal (2) for the "backwards" drive direction.

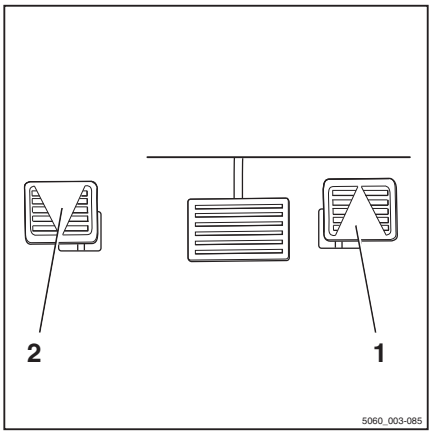

NOTE

In the dual pedal version, the drive direction switches on the operating devices do not function.

The indicator for the selected drive direction ("forwards" (1) or "reverse" (2)) lights up on the display-operating unit.

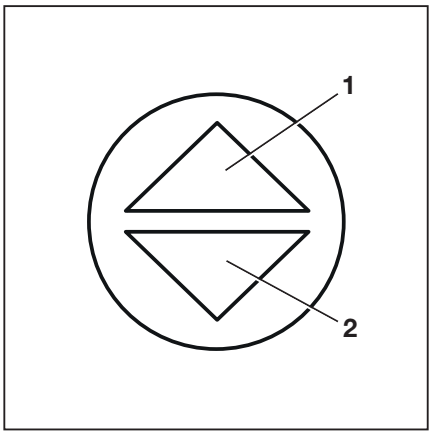

NOTE

Depending on the equipment, the following variants of warning units for reverse travel may be present:

- *An acoustic signal will be heard.*
- *The STILL SafetyLight lights up.*
- *The hazard warning system flashes.*

The truck travels in the selected drive direction. The speed is controlled by the accelerator pedal position. The truck brakes when the accelerator pedal is released.

NOTE

The truck is also held in place on ascending or descending gradients even if the electric parking brake is not engaged.

⚠ DANGER

Risk of accident due to brake failure!

The regenerative brake only functions if the truck is switched on, the emergency off switch has not been actuated and the parking brake is released.

- Use the brake pedal if the regenerative brake malfunctions.
- Engage the parking brake before leaving the truck.

Changing the drive direction

- Remove your foot from the actuated accelerator pedal.
- Press down the accelerator pedal for the opposite direction.

The truck travels in the selected drive direction.

NOTE

If an electrical fault occurs in the accelerator, the drive unit is switched off. In this situation, the truck is not electrically braked. Once the electrical fault has been corrected, it will be possible to drive the truck again by releasing the accelerator pedal and then actuating the accelerator pedal again. If the truck still cannot be operated, park the truck securely and contact the authorised service centre.

Operating the service brake ▷

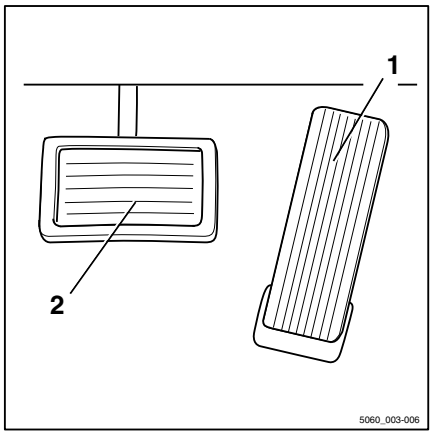

⚠ DANGER

If the service brake fails, the truck cannot brake sufficiently. Risk of accident!

If the driver notices that the electrical braking effect has reduced by 50% and that the drive torque has decreased to 50% of the normal level, a component failure may have occurred.

- Stop the truck by braking.
- Notify the authorised service centre.
- Do not operate the truck again until the service brake has been repaired.

⚠ DANGER

At speeds that are too high, there is a danger that the truck could slip or overturn!

The braking distance of the truck depends on the weather conditions and the level of contamination on the roadway, among other things. Note that the basic braking distance increases with the square of the speed.

– Adapt your driving and braking style to suit the weather conditions and the level of contamination on the roadway.
– Always choose a driving speed that will provide a sufficient stopping distance.

The regenerative brake converts the acceleration energy of the truck into electrical energy. This causes the truck to brake.

– To do this, release the accelerator pedal (1).
– If the braking effect is inadequate, use the brake pedal (2) to also actuate the service brake.

In the first section of the brake pedal's travel, only the regenerative braking takes effect on the rear wheel. The mechanical brake does not apply until the pedal is pushed further. The mechanical brake acts on the front wheels.

Electrical braking recovers energy for the battery. This results in a longer operating time between the charging processes and less wear to the brakes.

⚠ WARNING

Risk of accident due to failure of the regenerative brake.

If the truck has a lithium-ion battery and the battery is fully charged, it cannot absorb any electrical energy through the energy recovery of the drive. In this case, the truck control unit deactivates the regenerative brake. The truck only coasts on level surfaces. The truck is not braked.

If the regenerative brake is deactivated, the message `Battery recovery low` appears on the display of the display-operating unit.

– In this case, brake the truck with the service brake, especially on downhill drives on ramps.
– Be particularly careful when driving.

The battery heats up when the hydraulic functions are actuated. The regenerative brake

is then available again. The message disappears.

Actuating the parking brake

⚠ DANGER

There is a risk of fatal injury from being run over if the truck rolls away.

- The truck must not be parked on a slope.
- In emergencies, secure the truck using wedges on the side facing downhill.
- Only leave the truck when the parking brake has been applied.

Applying the parking brake

- Pull the parking brake lever (2) back fully and release it.

The parking brake lever engages. The parking brake is applied. The wheels on the drive axle are blocked.

The "parking brake" symbol Ⓟ appears on the display in place of the speed information.

When a drive direction is selected and the accelerator pedal is actuated, the message `Release parking brake` ⓘ appears.

▷

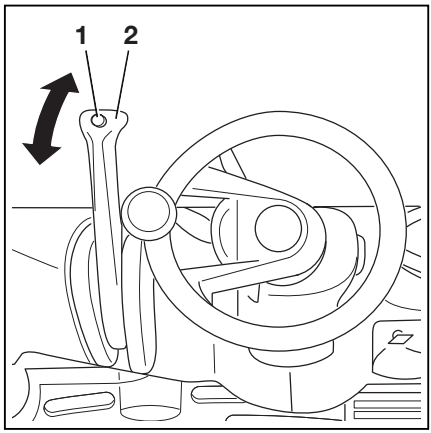

Releasing the parking brake

- Pull the parking brake lever (2) back.
- Push down the knob (1) and hold it down.
- Move the parking brake lever (2) forwards and release both the lever and the knob.

The parking brake is released.

NOTE

The parking brake lever swivels to the forward position automatically via spring force and requires only gentle manual guidance. If the movement of the parking brake is stiff, notify the authorised service centre.

After the parking brake has been released, the previously selected drive direction is retained and is shown on the drive direction indicator.

Special features when the parking brake is released

Cause	Effect
The driver's seat is vacated. The parking brake has not been applied.	The message `Apply parking brake` appears.
The truck needs to be switched off but the parking brake has not been applied.	The message `Apply parking brake` appears. The truck cannot be switched off.

"Safe parking" function (variant)

This function monitors the braking effect after the truck is parked. If a sensor is fitted on the lift mast (variant), it also checks whether the fork carriage is lowered.

This function alerts the driver with an audible signal if:

- The driver leaves the driver's seat without applying the parking brake
- The driver leaves the driver's seat without lowering the fork carriage (variant)
- The driver attempts to switch off the truck without applying the parking brake
- The truck starts moving approximately 20 seconds after the parking brake is applied

Activation and intervention of the function

Cause	Effect
The driver's seat is vacated. The parking brake has not been applied.	A warning signal sounds. Sitting in the driver's seat silences the warning signal.
The truck needs to be switched off but the parking brake has not been applied.	The truck cannot be switched off. A warning signal sounds. Applying the parking brake silences the warning signal.

Cause	Effect
The parking brake has been applied but has not been applied correctly as a result of a malfunction The driver's seat is vacated.	A warning signal sounds. Sitting in the driver's seat silences the warning signal. Use wedges to prevent the truck from rolling away. Notify the authorised service centre.
The truck must be switched off. The parking brake has been applied but has not engaged correctly as a result of a malfunction.	The truck cannot be switched off. A warning signal sounds. Use wedges to prevent the truck from rolling away. Notify the authorised service centre.

⚠ DANGER

Risk of fatal injury from being run over if the truck rolls away!

If the parking brake is faulty, park the truck safely and secure it so that it cannot roll away.

- If necessary, use wedges to prevent the truck from rolling away.
- Have the parking brake repaired by an authorised service centre.

Steering

DANGER

Risk of accident!

If the hydraulics fail, there is a risk of accident as the steering characteristics will have changed.

– Do not operate the truck if it has a defective steering system.

– Steer the truck by turning the steering wheel (1) accordingly.

Turning the steering wheel to the left (L) steers the truck to the left (L).

Turning the steering wheel to the right (R) steers the truck to the right (R).

The arrow (2) displays the direction in which the truck is moving.

For information on the turning radius, see the "Technical data".

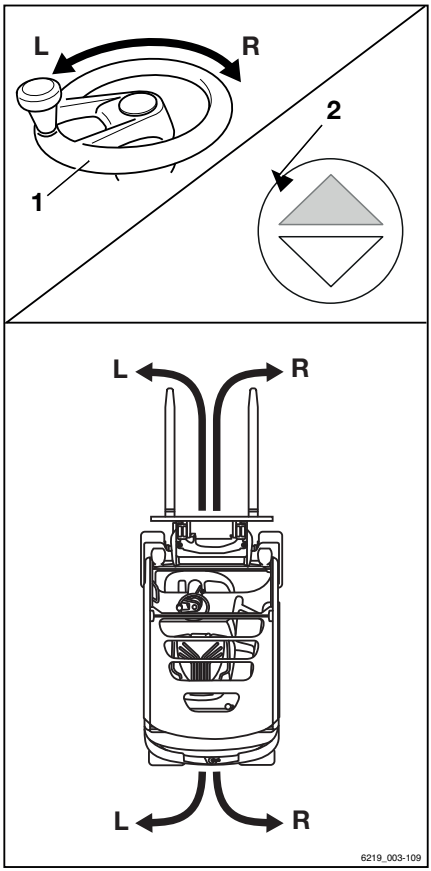

Reducing speed when turning (Curve Speed Control)

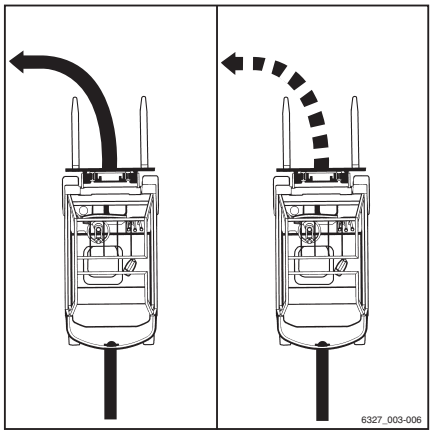

This function reduces the speed of the truck as the steering angle increases, regardless of the amount to which the accelerator has been actuated. If the steering angle is reduced again upon exiting the curve, the truck accelerates in line with how far the accelerator is depressed.

However, the function does not release the driver from the duty to approach a curve at a speed according to the following factors:

- The carried load
- The roadway conditions
- The radius of the curve

⚠ DANGER

The Curve Speed Control function cannot override the physical limits of stability. Despite this function, there still is a risk of tipping!

– Before using this function, familiarise yourself with the change to the driving and steering characteristics of the truck.

⚠ DANGER

Increased risk of tipping if the Curve Speed Control function is disabled! If the controller fails while the truck is in motion or if the controller is disabled, the truck will no longer automatically brake when steering.

– Do not turn off the key switch while driving.

– Actuate the emergency stop switch only in emergencies.

– Always adapt your driving style to the conditions.

Despite the Curve Speed Control function, the truck may overturn in extreme cases within the following situations:

- Cornering too fast on uneven or inclined roadways.
- Turning the steering wheel sharply while driving.
- Cornering with an inadequately secured load.
- Cornering too fast on a smooth or wet roadway.

Speed restriction (variant) ▷

The speed restriction (variant) is a function that can be configured by the fleet manager. It sets a maximum speed that can either be permanent or be called up by the driver. This function helps the driver to comply with speed restrictions, e.g. in storage areas or other specific areas.

Switching the speed restriction on and off

– Press the ☰ button.

The first menu level appears.

– Press the `Drive` softkey ◎.

The `Drive` menu appears.

– Press the `Speed restriction` softkey 🏎.

The activation bar appears next to the symbol. The speed restriction is switched on.

– To switch off the speed restriction, press the softkey again.

Configuring the speed restriction

NOTE

Access to the settings menu is available only if the truck is at a standstill and the parking brake is applied. If the parking brake is released prematurely, the settings menu will close. Access is only granted when the password is entered by the fleet manager.

– Stop the truck.

– Apply the parking brake.

– Press the ☰ button.

– Press the ⚙ softkey.

The first menu level appears.

– Activate the "Access authorisation for the fleet manager".

– Press the `Truck settings` softkey 🚚⚙.

– Press the `Speed restriction` softkey.

The menu that opens offers the following functions:

- `Permanent`
  Enabling this function limits the speed until the fleet manager disables this function.
- `By pressing a button`
  If this function is activated, the driver may switch the speed restriction on and off by pressing the softkey.
- `Entering the maximum speed`
  This menu can be used to set the maximum truck speed when speed restriction is active.

– To adjust the maximum speed, press the `Enter max. speed` softkey.

The `Speed restriction` menu opens. ▷

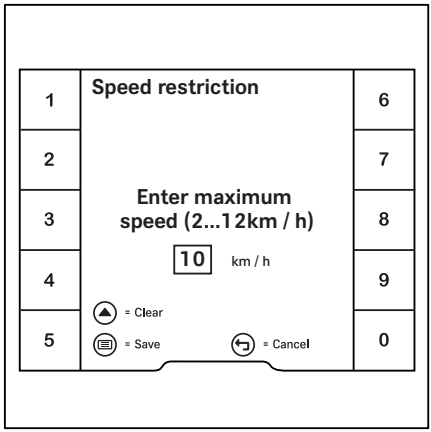

– Using the softkeys, set a maximum speed between 2 km/h and 12 km/h.

The maximum speed is dependent on the truck equipment and may be restricted by a factory setting.

– To `save`, press the button.

The maximum speed is entered.

– To `clear`, press the scroll button.

The entry is deleted.

– To `cancel`, press the back button.

The display reverts to the previous menu.

The main display button takes you to the main display.

Cruise control (variant) ▷

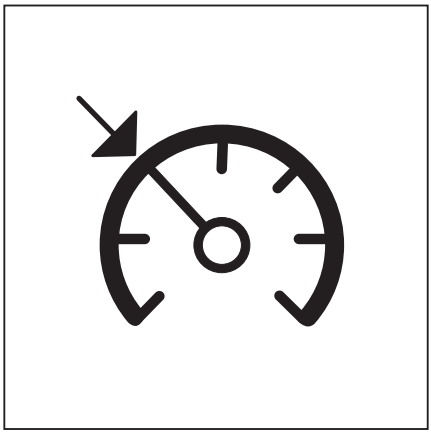

The "cruise control" assistance function allows the driver to maintain a constant truck speed over a reasonable distance. In addition, the cruise control function can be used to comply with any speed restriction that is in force on the company's premises. The cruise control function operates when driving forwards at a speed of 6 km/h or faster. The function is put on standby via the display-operating unit and can be activated and deactivated using the drive direction switch on the operating device for the hydraulic functions.

When the cruise control function is activated, the driver can save the speed when driving forwards at a speed of at least 6.0 km/h by pressing a button and can continue driving without actuating the accelerator pedal.

The pictogram (3) for operating the cruise control function is located on the operating device for the hydraulic functions.

Putting the cruise control function on standby

In order for the cruise control function to be activated via the drive direction switch, the function must first be put on standby using the display-operating unit.

– Press the button.

The first menu level appears.

– Press the `Drive` softkey .

The `Drive` menu appears.

– Press the softkey.

The orange-coloured activation bar next to the softkey lights up. The cruise control function is ready.

The greyed-out symbol (1) appears on the display.

Taking the cruise control function off standby

Pressing the softkey again takes the function off standby.

A single beep sounds. The symbol (1) is no longer displayed.

Activating the cruise control function

WARNING

Risk of accident from failing to adjust speed!

Driving at excessive speeds can cause accidents, e.g. the truck could tip over when cornering.

– Adjust speed along the entire distance being travelled
– Pay particular attention to cornering speed
– Observe safety regulations when driving
– Observe the special behaviour of the cruise control function and the dangers associated with it

– Accelerate the truck to the required speed (at least 6.0 km/h)

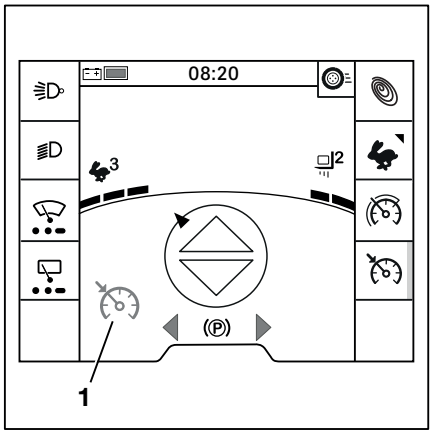

– Actuate the drive direction switch (2) for forwards travel. ▷

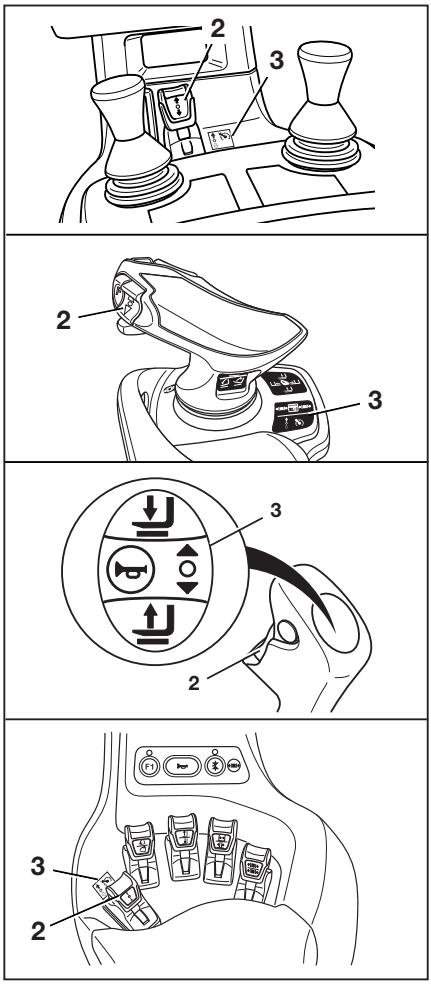

NOTE

In the dual-pedal version (variant), the drive direction switch (2) is used exclusively to activate and deactivate the cruise control function (variant).

The cruise control function is active. The current speed is saved.

Two beeps signal that the cruise control function is active. The symbol (4) appears in black in the display.

– Take your foot off the accelerator pedal.

The truck continues to drive at the selected speed until the cruise control function is deactivated.

– To save a different speed, deactivate the cruise control function and activate the function at the newly selected speed.

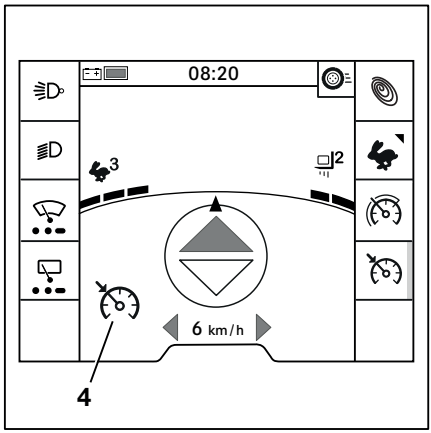

Deactivating cruise control

Deactivating the cruise control function means that the speed is again controlled by the accelerator pedal. The cruise control function remains on standby. The function can be activated at any time when the accelerator pedal is depressed by pressing the drive direction switch for forwards travel again.

When the cruise control function is deactivated, the symbol (1) is greyed out.

NOTE

The easiest way to deactivate the cruise control function is to touch the accelerator pedal.

The following actions deactivate the cruise control function:

- Actuating the foot brake
- Actuating the parking brake
- Actuating the accelerator pedal

  Depressing the accelerator pedal beyond the set speed accelerates the truck.
- Changing the travel direction
- Press the drive direction switch for forwards travel again without actuating the accelerator pedal
- Pressing the softkey

  Pressing the softkey switches off the cruise control function.

Other conditions that will cause the truck control unit to deactivate the cruise control function are:

- Vacating the driver's seat
- Truck speed less than 2.5 km/h.
- Speed restriction set to less than 4.5 km/h.
- The truck control unit detects abnormalities, e.g. battery door open, battery carrier not retracted.

If the accelerator pedal is actuated in these circumstances, the truck is initially braked via the drive unit. The following message appear on the display:

`Release the accelerator pedal`

The truck will continue to drive only when the accelerator pedal is released and then actuated again.

If these conditions have changed again, the speed that was initially saved is set again.

NOTE

If the truck is configured with automatic functions to reduce the driving speed and the driving speed is reduced to 6 km/h or less, the cruise control function is automatically deactivated.

Parking

Parking the truck securely and switching it off

DANGER

There is a risk of fatal injury from being run over if the truck rolls away.

- Do not park the truck on gradients.
- In emergencies, secure the truck using wedges on the side facing downhill.
- Only leave the truck when the parking brake has been applied.

DANGER

There is a risk to life caused by a falling load or if truck components are being lowered.

- Lower the load fully before leaving the truck.

CAUTION

Batteries may freeze!

If the truck is parked in an ambient temperature of below -10°C for an extended period, the batteries will cool down. For lead-acid batteries, the electrolyte can freeze and damage the batteries. The truck is then not ready for operation.

- At ambient temperatures of below -10°C, only park the truck for short periods of time.

- Apply parking brake.

– Lower the fork carriage to the ground. ▷
– Tilt the lift mast forwards until the tips of the fork arms rest on the ground.
– If attachments (variant) are fitted, retract the working cylinders; see the chapter entitled "General instructions for controlling attachments".

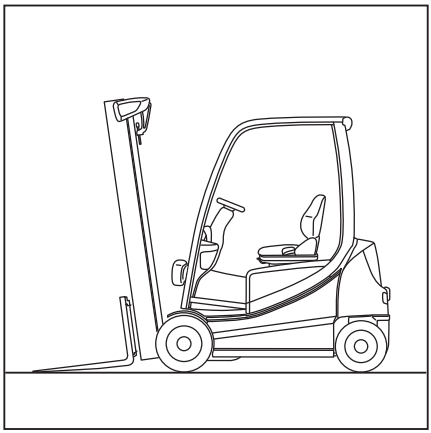

– Turn the switch key to position "0" and remove the key. ▷

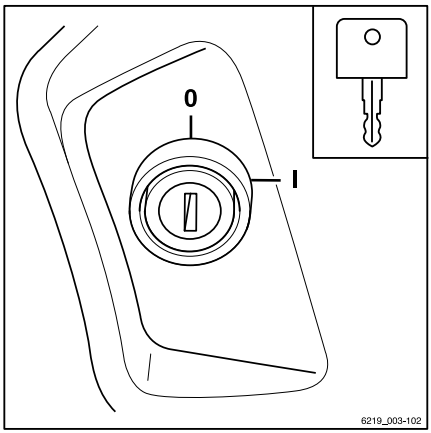

– In the "push button ignition" variant, press the button. (1)

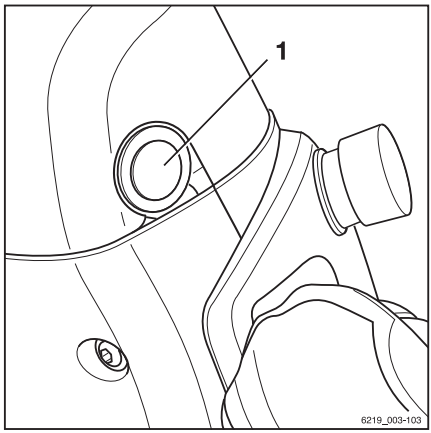

NOTE

Switch keys, FleetManager cards (variant), FleetManager transponder chips (variant) and the PIN code for access authorisation (variant) must not be handed over to other persons unless explicit instructions to this effect have been given by the responsible fleet manager.

Wheel chock (variant)

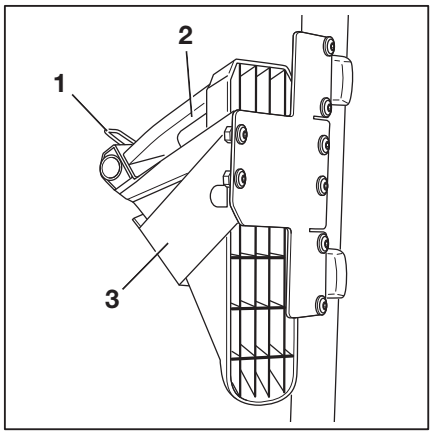

If the truck has to be parked on a slope in an emergency, the wheel chock is used to secure the truck against rolling away. The wheel chock is located on the front left post of the overhead guard.

NOTE

The chapter entitled "Wedging the wheels" under "Transporting the truck" describes how to use the wheel chocks correctly.

– To remove the wheel chock, stand to the left of the truck.

– Pull the latch forward (1) and hold it in place.

– Remove the wheel chock (2) from the support mounting (3).

– Slide the wheel chock (2) under the wheel facing the gradient.

– After use, reinsert the wheel chock (2) in the support mounting (3).

– Ensure that the latch (1) holds the wheel chock in place.

Lifting

Lifting system variants

The movement of the fork carriage and the lift mast heavily depends on the following equipment:

- The lift mast with which the truck is equipped, see ⇒Chapter "Lift mast versions", Page 176
- The operating device with which the hydraulic functions are controlled, see ⇒Chapter "Operating devices for the lifting system", Page 177

Regardless of the equipment variants of the truck, the basic specifications and procedures must be complied with, see ⇒Chapter "Safety regulations for handling loads", Page 199 .

Lift mast versions

⚠ DANGER

Risk of accident if the lift mast or the load collides with low ceilings or entrances.

– Note that the inner lift mast or load may be higher than the fork carriage.

– Observe the heights of ceilings and entrances.

One of the following lift masts may be attached to the truck:

Telescopic lift mast

When lifting, the lift mast rises above the outer lift cylinders. The lift mast takes the fork carriage with it via the chains. In this scenario, the fork carriage rises at twice the speed of the inner lift mast. The top edge (1) of the inner lift mast can therefore be higher than the fork carriage.

▷

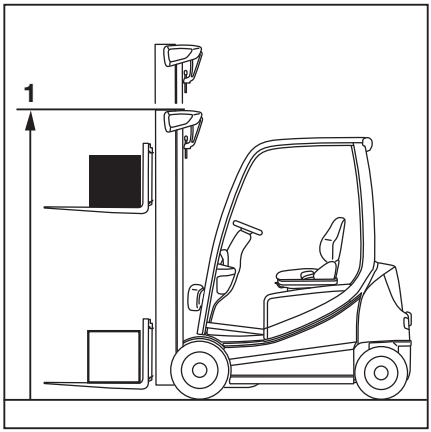

NiHo lift mast (variant)

During lifting, the inner lift cylinder moves up to free lift (3) and then the outer lift cylinders raise the inner lift mast up to the maximum height (2).

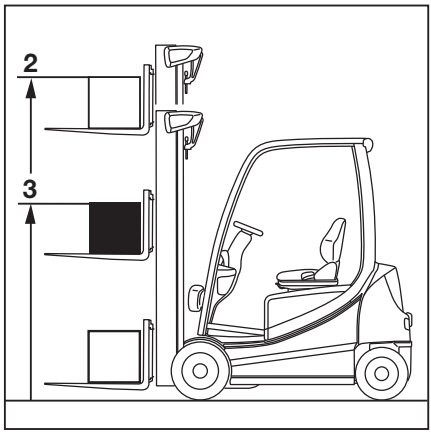

NOTE

When lifting above the free lift, the fork carriage always remains at the upper edge of the extending lift mast.

Triple mast (variant)

During lifting, the inner lift cylinder moves up to free lift (3) and then the outer lift cylinders raise the inner lift mast up to the maximum height (2).

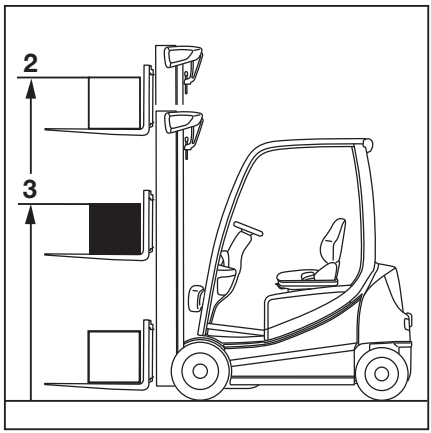

Operating devices for the lifting system

The method of operating the lifting system depends on the operating devices included in the truck's equipment.

Possible equipment variants include:

- Multi-lever
- 2-way mini-lever
- 3-way mini-lever
- 4-way mini-lever

- Fingertip
- Joystick 4Plus

For clarity, the movements of the lifting system ▷ are referred to by the letters (A, B, C, D) in this subchapter.

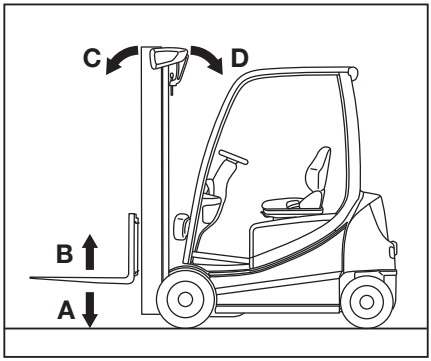

A Lower the fork carriage
B Lift the fork carriage
C Tilting the lift mast forwards
D Tilting the lift mast backwards

– See the relevant sections in this subchapter.

⚠ WARNING

Risk of short circuit and fire during continuous lifting, lowering and tilting!

If the lifting function, the lowering function or the tilt function are used against the stop for more than one minute, there is a risk of short circuit and fire.

– Use the lifting function, the lowering function or the tilt function against the stop for a maximum of one minute.

⚠ WARNING

Risk of injury due to delayed response from the truck!

If the lifting movements are configured to use low dynamics, the lifting system responds after a delay when the operating device is released, even in an emergency. The fork carriage does not stop immediately upon release. It only stops after approximately one second. This behaviour may also occur when specific settings are configured for the Dynamic Load Control 1 & 2 assistance systems.

– Work with particular attention and care.

NOTE

If several hydraulic functions are used at the same time, these functions can influence each other. For example, if the fork carriage is raised and an attachment is operated at the same time, this may change the lifting speed or the operating speed of the attachment.

Controlling the lifting system using multi-lever operation ▷

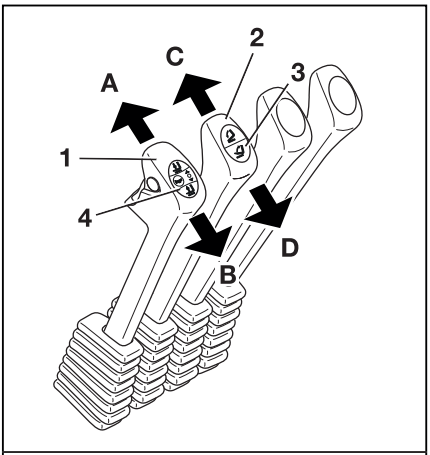

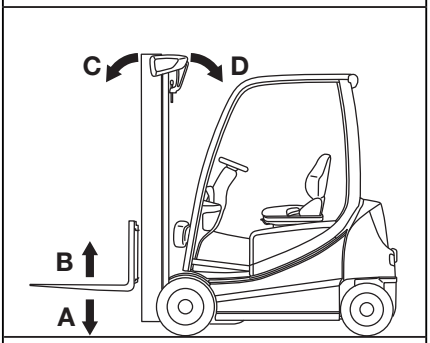

⚠ DANGER

Reaching into or climbing between moving parts of the truck (e.g. lift mast, sideshifts, working equipment, load carrying devices etc.) can lead to serious injury or death and is therefore prohibited.

– Observe the safety regulations for handling loads.

– Operate the lifting system from the driver's seat only.

⚠ WARNING

Risk of short circuit in the event of prolonged actuation of the working hydraulics!

If the working hydraulics (e.g lifting function, tilt function, auxiliary hydraulics function) are activated for longer than 1 minute against the stop/end position, there is a risk of short circuit.

– Activate the working hydraulics for a maximum of 1 minute against the stop/end position.

– Following this, do not activate the working hydraulics against the stop/end position for at least 3 minutes.

⚠ WARNING

Risk of accident as a result of an operating error!

These operating instructions describe how to operate the lifting system in the factory configuration.

If the authorised service centre has configured a different configuration, the newly applied pictograms must be observed to ensure safe operation. The operating company must make all drivers aware of the fact that a different configuration has been configured.

– Observe the pictograms on the operating levers.

– Before use, check that the hydraulic functions are working correctly.

The lifting and lowering movements of the lift mast are controlled using the "lift/lower" operating lever (1). The adhesive label with the corresponding pictogram (4) is located on the operating lever.

The tilting movement of the lift mast is controlled using the "tilt" operating lever (2). The adhesive label with the corresponding pictogram (3) is located on the operating lever.

The pictograms are arranged according to the directions of movement of the operating lever (1) or (2).

Lifting/lowering the fork carriage

To lift the fork carriage:

– Move the "lift/lower" operating lever (1) in the direction of the arrow (B).

To lower the fork carriage:

– Move the "lift/lower" operating lever (1) in the direction of the arrow (A).

Tilting the lift mast

To tilt the lift mast forwards:

– Move the "tilt" operating lever (2) in the direction of the arrow (C).

To tilt the lift mast backwards:

– Move the "tilt" operating lever (2) in the direction of the arrow (D).

Movements of the lifting system and meanings of the pictograms

A Lowering
B Lifting
C Tilting forwards
D Tilting backwards

Controlling the lifting system using a double mini-lever ▷

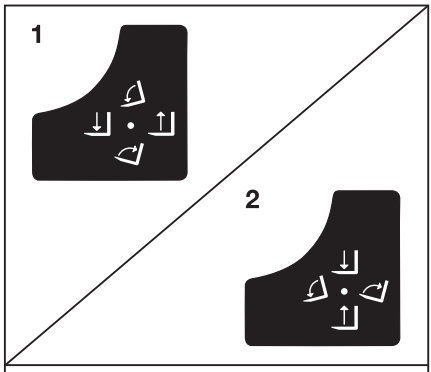

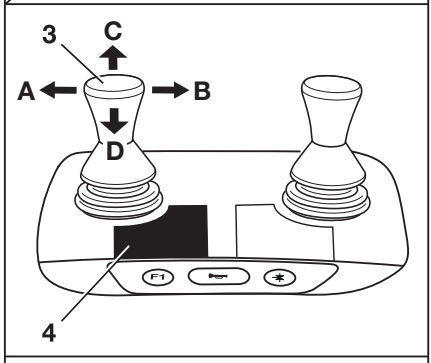

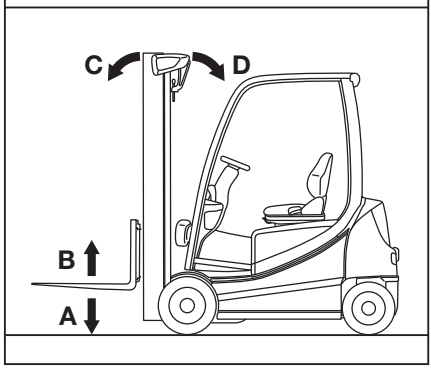

⚠ DANGER

Reaching into or climbing between moving parts of the truck (e.g. lift mast, sideshifts, working equipment, load carrying devices etc.) can lead to serious injury or death and is therefore prohibited.

- Observe the safety regulations for handling loads.
- Operate the lifting system from the driver's seat only.

⚠ WARNING

Risk of short circuit in the event of prolonged actuation of the working hydraulics!

If the working hydraulics (e.g lifting function, tilt function, auxiliary hydraulics function) are activated for longer than 1 minute against the stop/end position, there is a risk of short circuit.

- Activate the working hydraulics for a maximum of 1 minute against the stop/end position.
- Following this, do not activate the working hydraulics against the stop/end position for at least 3 minutes.

⚠ WARNING

Risk of accident as a result of an operating error!

These operating instructions describe how to operate the lifting system in the factory configuration.

If the authorised service centre has configured a different configuration, the newly applied pictograms must be observed to ensure safe operation. The operating company must make all drivers aware of the fact that a different configuration has been configured.

- Observe the pictograms on the operating levers.
- Before use, check that the hydraulic functions are working correctly.

The lifting, lowering and tilting movements of the lift mast are controlled using the "lift mast" 360° lever (3). The adhesive label bearing the pictograms for the hydraulic functions (1) or (2) is affixed at the designated point (4).

The pictograms are arranged according to the direction of movement of the "lift mast" 360° lever (3).

NOTE

- *The truck is configured at the factory in accordance with the adhesive label (1). The following steps for moving the fork carriage and lift mast are based on this configuration.*
- *The configuration according to the adhesive label (2) with reversed functional axes can be ordered as a variant.*

Lifting/lowering the fork carriage

To lift the fork carriage:

– Move the "lift mast" 360° lever (3) in the direction of the arrow (B).

To lower the fork carriage:

– Move the "lift mast" 360° lever (3) in the direction of the arrow (A).

Tilting the lift mast

To tilt the lift mast forwards:

– Move the "lift mast" 360° lever (4) in the direction of the arrow (C).

To tilt the lift mast backwards:

– Move the "lift mast" 360° lever (4) in the direction of the arrow (D).

Movements of the lifting system and meanings of the pictograms

A Lowering
B Lifting
C Tilting forwards
D Tilting backwards

Controlling the lifting system using a triple mini-lever ▷

⚠ DANGER

Reaching into or climbing between moving parts of the truck (e.g. lift mast, sideshifts, working equipment, load carrying devices etc.) can lead to serious injury or death and is therefore prohibited.

– Observe the safety regulations for handling loads.

– Operate the lifting system from the driver's seat only.

⚠ WARNING

Risk of short circuit in the event of prolonged actuation of the working hydraulics!

If the working hydraulics (e.g lifting function, tilt function, auxiliary hydraulics function) are activated for longer than 1 minute against the stop/end position, there is a risk of short circuit.

– Activate the working hydraulics for a maximum of 1 minute against the stop/end position.

– Following this, do not activate the working hydraulics against the stop/end position for at least 3 minutes.

⚠ WARNING

Risk of accident as a result of an operating error!

These operating instructions describe how to operate the lifting system in the factory configuration.

If the authorised service centre has configured a different configuration, the newly applied pictograms must be observed to ensure safe operation. The operating company must make all drivers aware of the fact that a different configuration has been configured.

– Observe the pictograms on the operating levers.

– Before use, check that the hydraulic functions are working correctly.

The lifting, lowering and tilting movements of the lift mast are controlled using the "lift mast" 360° lever (3). The adhesive label bearing the pictograms for the hydraulic functions (1) or (2) is affixed at the designated point (4).

The pictograms are arranged according to the direction of movement of the "lift mast" 360° lever (3).

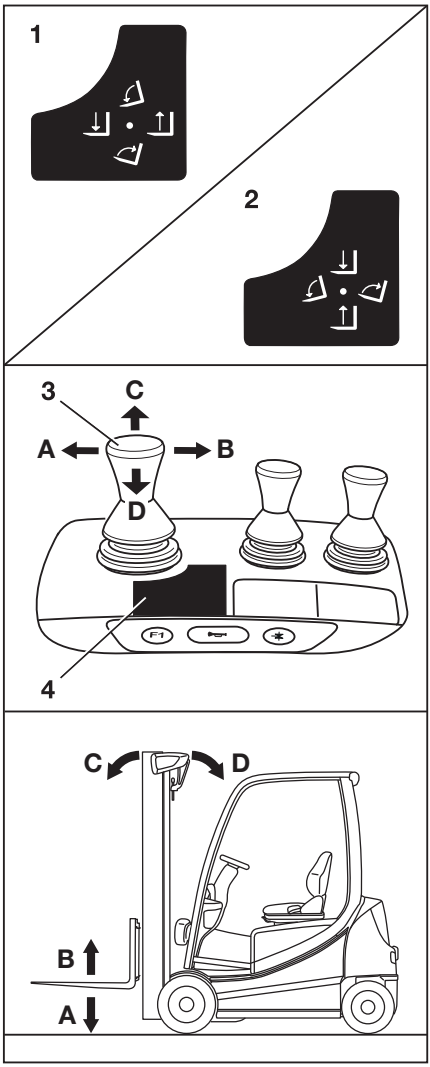

NOTE

The truck is configured at the factory in accordance with the adhesive label (1). The following steps for moving the fork carriage and lift mast are based on this configuration.

Lifting/lowering the fork carriage

To lift the fork carriage:

– Move the "lift mast" 360° lever (3) in the direction of the arrow (B).

To lower the fork carriage:

– Move the "lift mast" 360° lever (3) in the direction of the arrow (A).

Tilting the lift mast

To tilt the lift mast forwards:

– Move the "lift mast" 360° lever (4) in the direction of the arrow (C).

To tilt the lift mast backwards:

– Move the "lift mast" 360° lever (4) in the direction of the arrow (D).

Movements of the lifting system and meanings of the pictograms

A Lowering
B Lifting
C Tilting forwards
D Tilting backwards

Controlling the lifting system using a quadruple mini-lever ▷

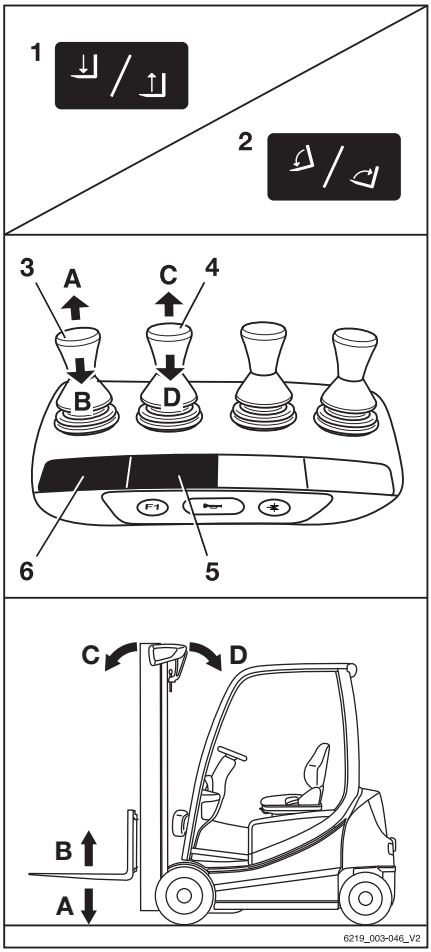

⚠ DANGER

Reaching into or climbing between moving parts of the truck (e.g. lift mast, sideshifts, working equipment, load carrying devices etc.) can lead to serious injury or death and is therefore prohibited.

– Observe the safety regulations for handling loads.

– Operate the lifting system from the driver's seat only.

⚠ WARNING

Risk of short circuit in the event of prolonged actuation of the working hydraulics!

If the working hydraulics (e.g lifting function, tilt function, auxiliary hydraulics function) are activated for longer than 1 minute against the stop/end position, there is a risk of short circuit.

– Activate the working hydraulics for a maximum of 1 minute against the stop/end position.

– Following this, do not activate the working hydraulics against the stop/end position for at least 3 minutes.

⚠ WARNING

Risk of accident as a result of an operating error!

These operating instructions describe how to operate the lifting system in the factory configuration.

If the authorised service centre has configured a different configuration, the newly applied pictograms must be observed to ensure safe operation. The operating company must make all drivers aware of the fact that a different configuration has been configured.

– Observe the pictograms on the operating levers.

– Before use, check that the hydraulic functions are working correctly.

The lifting and lowering movements of the lift mast are controlled using the "lift/lower" operating lever (3). The adhesive label bearing the corresponding pictograms (1) is affixed at the designated point (6).

The tilting movement of the lift mast is controlled using the "tilt" operating lever (4).
The adhesive label bearing the corresponding pictograms (2) is affixed at the designated point (5).

The pictograms are arranged according to the directions of movement of the operating lever (3) or (4).

Lifting/lowering the fork carriage

To lift the fork carriage:

– Move the "lift/lower" operating lever (3) in the direction of the arrow (B).

To lower the fork carriage:

– Move the "lift/lower" operating lever (3) in the direction of the arrow (A).

Tilting the lift mast

To tilt the lift mast forwards:

– Move the "lift mast" operating lever (4) in the direction of the arrow (C).

To tilt the lift mast backwards:

– Move the "lift mast" operating lever (4) in the direction of the arrow (D).

Movements of the lifting system and meanings of the pictograms

A Lowering
B Lifting
C Tilting forwards
D Tilting backwards

Controlling the lifting system using the Fingertip ▷

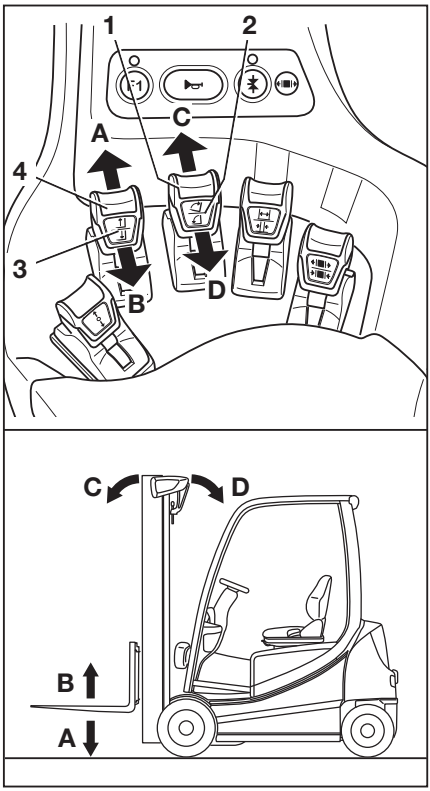

⚠ DANGER

Reaching into or climbing between moving parts of the truck (e.g. lift mast, sideshifts, working equipment, load carrying devices etc.) can lead to serious injury or death and is therefore prohibited.

– Observe the safety regulations for handling loads.
– Operate the lifting system from the driver's seat only.

⚠ WARNING

Risk of short circuit in the event of prolonged actuation of the working hydraulics!

If the working hydraulics (e.g lifting function, tilt function, auxiliary hydraulics function) are activated for longer than 1 minute against the stop/end position, there is a risk of short circuit.

– Use the lifting function, the lowering function or the tilt function against the stop for a maximum of 1 minute.
– Following this, the working hydraulics must not be actuated against the stop/end position for at least 3 minutes.

⚠ WARNING

Risk of accident as a result of an operating error!

These operating instructions describe how to operate the lifting system in the factory configuration.

If the authorised service centre has configured a different configuration, the newly applied pictograms must be observed to ensure safe operation. The operating company must make all drivers aware of the fact that a different configuration has been configured.

– Observe the pictograms on the operating levers.
– Before use, check that the hydraulic functions are working correctly.

The lifting and lowering movements of the lift mast are controlled using the "lift/lower" operating lever (4). The adhesive label with the corresponding pictogram (3) is located on the operating lever.

The tilting movement of the lift mast is controlled using the "tilt" operating lever (1). The adhesive label with the corresponding pictogram (2) is located on the operating lever.

The pictograms are arranged according to the directions of movement of the operating lever (4) or (1).

Lifting/lowering the fork carriage

To lift the fork carriage:

– Move the "lift/lower" operating lever (4) in the direction of the arrow (B).

To lower the fork carriage:

– Move the "lift/lower" operating lever (4) in the direction of the arrow (A).

Tilting the lift mast

To tilt the lift mast forwards:

– Move the "tilt" operating lever (1) in the direction of the arrow (C).

To tilt the lift mast backwards:

– Move the "tilt" operating lever (1) in the direction of the arrow (D).

Movements of the lifting system and meanings of the pictograms

A Lowering
B Lifting
C Tilting forwards
D Tilting backwards

Controlling the lifting system using the Joystick 4Plus

⚠ DANGER

Reaching into or climbing between moving parts of the truck (e.g. lift mast, sideshifts, working equipment, load carrying devices etc.) can lead to serious injury or death and is therefore prohibited.

– Observe the safety regulations for handling loads.

– Operate the lifting system from the driver's seat only.

⚠ WARNING

Risk of short circuit in the event of prolonged actuation of the working hydraulics!

If the working hydraulics (e.g lifting function, tilt function, auxiliary hydraulics function) are activated for longer than 1 minute against the stop/end position, there is a risk of short circuit.

– Actuate the working hydraulics against the stop/end position for a maximum of 1 minute.
– Following this, the working hydraulics must not be actuated against the stop/end position for at least 3 minutes.

⚠ WARNING

Risk of accident as a result of an operating error!

These operating instructions describe how to operate the lifting system in the factory configuration.

If the authorised service centre has configured a different configuration, the newly applied pictograms must be observed to ensure safe operation. The operating company must make all drivers aware of the fact that a different configuration has been configured.

– Observe the pictograms on the operating levers.
– Before use, check that the hydraulic functions are working correctly.

The lifting, lowering and tilting movements of the lift mast are controlled using the Joystick 4Plus (1). The adhesive labels bearing the pictograms for the hydraulic functions are located in positions (2) and (4).

The pictograms are arranged according to the directions of movement of the Joystick 4Plus (1) and the horizontal rocker button (3).

Lifting/lowering the fork carriage

To lift the fork carriage:

– Pull the Joystick 4Plus (1) backwards (B).

To lower the fork carriage:

– Push the Joystick 4Plus (1) forwards (A).

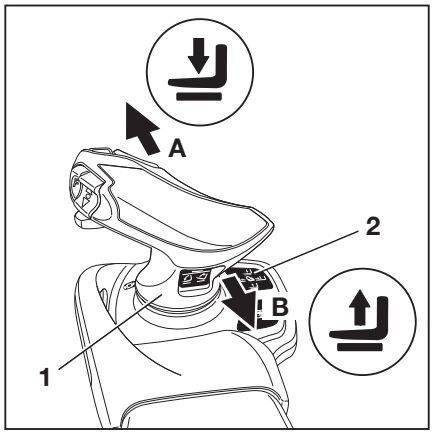

Tilting the lift mast

To tilt the lift mast forwards:

– Tilt the horizontal rocker button (3) to the left (C).

To tilt the lift mast backwards:

– Tilt the horizontal rocker button (3) to the right (D).

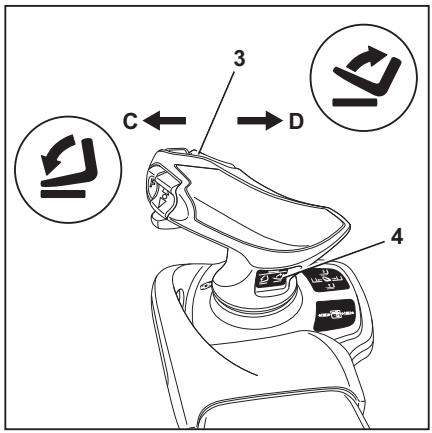

Fork carriage sideshift

To move the fork carriage to the left:

– Push the Joystick 4Plus (1) to the left (E).

To move the fork carriage to the right:

– Push the Joystick 4Plus (1) to the right (F).

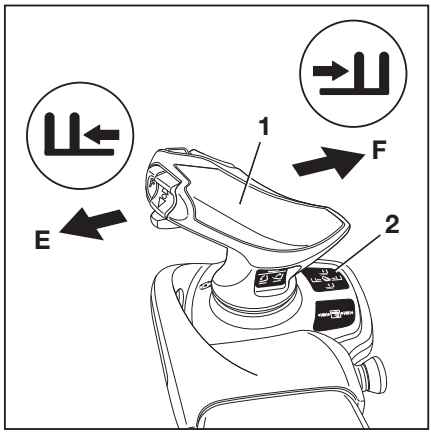

Movements of the lifting system and meanings of the pictograms

A Lowering
B Lifting
C Tilting forwards
D Tilting backwards
E Left sideshift
F Right sideshift

Dynamics of the hydraulic movements

⚠ WARNING

Risk of injury due to delayed response from the truck!

If the lifting movements are configured to use low dynamics, the lifting system responds after a delay when the operating device is released, even in an emergency. The fork carriage does not stop immediately upon release. It only stops after approximately one second. This behaviour may also occur when specific settings are configured for the Dynamic Load Control 1 & 2 assistance systems.

– Work with particular attention and care.

The authorised service centre can reduce the dynamics of the hydraulic movements to adapt the hydraulic movements to the application requirements. The hydraulic system movement will then respond more slowly to the actuation of the operating device.

Maximum dynamics are suitable for applications that require the load pick up system to respond quickly and directly. Minimum dynamics are suitable for applications that involve, for example, the movement of fragile goods during which impacts must be avoided.

Maximum dynamics (standard setting)

- The hydraulic movement immediately follows the actuation of the operating device.
- When the operating device is released, the hydraulic movement decelerates very quickly.
  The fork carriage quickly comes to a standstill.

Minimum dynamics

- The hydraulic movement accelerates very slowly when actuating the operating device.
- The hydraulic movement follows the actuation of the operating device very slowly.
- When the operating device is released, the hydraulic movement only decelerates slowly.
  The fork carriage therefore continues to run for some time before the movement comes to a standstill.

Selecting load programs 1 to 3 ▷

The truck has three load programs for the different lifting behaviours of the fork carriage and the lift mast. The higher the number of the load program selected, the greater the load dynamics.

Differences between the load programs

- 1 Load program 1:
  66% lifting speed
- 2 Load program 2:
  85% lifting speed
- 3 Load program 3:
  100% lifting speed

The lifting behaviour of the truck is selected via the display-operating unit under the menu item.

– Press the 1... softkey to select the desired load program. 3 .

– If the load programs are saved as a favourite on a softkey, press the softkey until the number of the desired load program is shown on the display. ▷

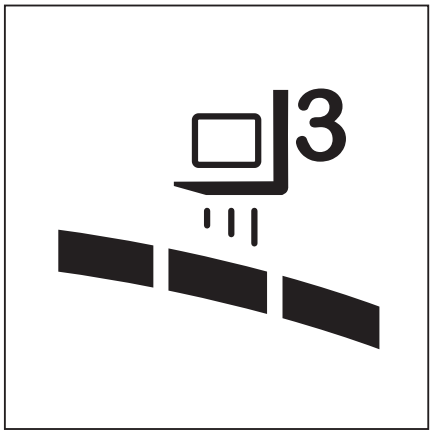

The number of dynamic bar segments shows the load dynamics of the selected load program.

Limiting the load dynamics to load program 1 during the warm-up phase ▷

NOTE

During the warm-up phase, the load dynamics are limited to load program 1. The adjacent symbol appears on the display until the warm-up phase is complete.

– Refer to the section entitled "Warming up the hydraulic oil at cold ambient temperatures" in the chapter entitled "Operation — Checks and tasks before daily use."

Fork wear protection (variant)

The "fork wear protection" variant ensures that the fork arms do not touch the ground. The fork arms are protected against wear and the building floor is protected against damage.

There are two types of fork wear protection:

- Fork wear protection (mechanical)
  This variant is described here.
- Electrical fork wear protection
  The fleet manager can configure this variant. See the section "Electrical fork wear

protection (variant)" in the chapter entitled "Lift height-dependent assistance systems".

The lift cylinders have in-built fixed stops to prevent the fork arms from hitting the ground. The lower stop makes inserting the forks into a pallet more comfortable.

The driver cannot adjust the fork wear protection manually. However, the fork wear protection must be continually adjusted as the wear on the front tyres increases.

– Contact the authorised service centre on this matter.

Changing the fork arms

⚠ DANGER

There is a risk of fatal injury from being run over if the truck rolls away.

– Do not park the truck on a gradient.
– Apply the parking brake.
– Change the fork extension in a cordoned-off, safe location on a level surface.

⚠ WARNING

There is a risk of injury when changing the fork arms; the weight of the fork arms could cause them to fall on your legs, feet or knees.

The space to the left and right of the fork is a danger area.

– Wear protective gloves and safety shoes when changing the fork arms.
– Ensure that no one stands in the danger area!
– Do not pull on the fork arms.
– The fork arms must always be carried by two people; if necessary, use a hoist.

NOTE

- *It is recommended that a transport pallet is used to supporting the fork arms when they are being installed or removed. The pallet size depends on the size of fork arms in use. It should be large enough that the fork arms do not protrude after being placed on the pallet. This means the fork arms can be safely placed down and transported.*
- *Both fork arms can be pushed over onto one side.*

Removing

▷

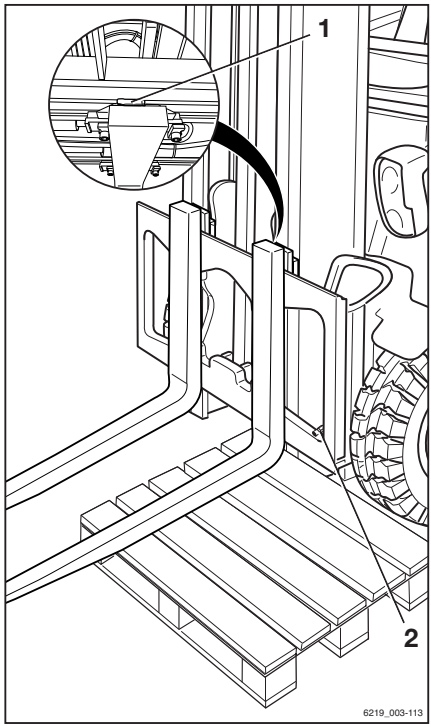

– Select the pallet according to the size of the fork arms.

– Position the pallet to the left or right of the fork carriage.

– Raise the fork carriage until the lower edges of the fork arms are approx. 3 cm higher than the height of the pallet.

– Actuate the parking brake and make sure it is applied securely.

– Turn the switch key to the left and pull it out.

– Undo the locking screw (2) on the right or left.

– Pull the locking lever (1) upwards and push the fork arms outwards onto the pallet.

Installing

– Position the fork arms on a pallet to the left or right of the fork carriage.

– Push the fork arms onto the fork carriage from the outside towards the centre.

– Pull the locking lever (1) upwards and push the fork arms into the required position. Ensure that the locking lever snaps into place.

– Fit and tighten the locking screw (2).

⚠ DANGER

There is a risk of fatal injury from a falling load or fork!

– Tighten the locking screw (2) each time a fork is changed.

– It is not permitted to drive or to transport loads without the locking screw in place.

NOTE

If the truck is equipped with the "load measurement" assistance system (variant), the "tare" function must always be run after the fork arms have been changed. Otherwise, correct load measurement cannot be guaranteed.

Malfunctions during lifting mode

Incorrect extension sequence

⚠ DANGER

Risk of accidents!

In the case of Hi-Lo lift masts (variant) and triplex lift masts (variant), an incorrect extension sequence may occur, i.e. the inner lift mast may extend before the free lift is complete. As a result, the overall height is exceeded and damage may occur in passageways or from low ceilings.

An incorrect extension sequence may, for instance, result from:

- The hydraulic oil temperature being too low.
- Blocking of the fork carriage in the inner lift mast.
- Blocking of the free lift cylinder.
- Blocking of the chain roller on the free lift cylinder.

– If the hydraulic oil temperature is too low, slowly actuate the lift mast functions several times in order to raise the oil temperature.

In the event that the fork carriage is blocked in the inner lift mast, or the free lift cylinder or chain roller are blocked, the cause of the blockage must be eliminated before resuming work.

– Notify your service centre

Load chains not under tension

⚠ DANGER

Danger caused by a falling load!

– Make sure that the chain(s) does (do) not become slack when lowering the load.

Slack chains can, for instance, result from:

- Resting the fork carriage or the load on the racking.
- Fork carriage rollers blocking in the lift mast due to contamination.

– If the fork carriage or the load comes to an unexpected stop, lift the fork carriage until the chains are under tension again and lower the load at another suitable location.

– If the fork carriage rollers in the lift mast become blocked due to contamination, lift the fork carriage until the chains are under tension again. Remove the contamination before resuming work.

⚠ WARNING

Risk of injury!

– Observe the safety regulations for working on the lift mast, see the chapter entitled "Working at the front of the truck".

Hydraulic blocking function

The hydraulic blocking function ensures that all the functions of the working hydraulics are disabled whenever the seat switch in the driver's seat is unloaded.

If the driver's seat is vacated, the blocking function prevents hydraulic operation for the following functions:

- Lift the load
- Lower the load
- Tilt the lift mast
- Auxiliary hydraulic functions
- Steering

NOTE

Only the emergency steering function remains available.

Handling loads

Safety regulations for handling loads

The safety regulations for handling loads are shown in the following sections.

⚠ DANGER

There is a risk of fatal injury from falling loads or from truck components being lowered.

- Never walk or stand underneath suspended loads or raised fork arms.
- Never exceed the maximum load values specified on the capacity rating plate. Otherwise stability cannot be guaranteed!

⚠ DANGER

Risk of accident from falling or crushing!

- Do not enter or reach into the danger area of the reach carriage.
- Never grab or climb on moving parts of the truck.
- Do not step onto the forks.
- Do not lift people.

⚠ DANGER

Risk of accident from falling loads!

- When transporting small items, attach a load backrest (variant) to prevent the load from falling on the driver.
- Use a closed roof covering (variant) in addition.

⚠ DANGER

Risk of accident from falling small parts during transport!

- When transporting small items, attach a load backrest (variant) to prevent the load from falling on the driver.
- Use a closed roof covering (variant) in addition.

Capacity rating plate

The load capacity indicated for the truck on the capacity rating plate must not be exceeded. The load capacity is influenced by the

load centre of gravity, the lift height, the attachment or fork arms used and the tyres.

– The position of the capacity rating plate can be taken from the "labelling points".

⚠ DANGER

Risk of fatal injury from the truck losing stability!

Never exceed the load capacity indicated on the capacity rating plate. This applies to compact and homogeneous loads. If these values are exceeded, the stability and rigidity of the fork arms and lift mast cannot be guaranteed.

Improper or incorrect operation or the placement of persons to increase load capacity is prohibited.

The attachment of additional weights to increase the load capacity is prohibited.

⚠ DANGER

Risk of death due to misinterpretation of the capacity rating plate!

Only the capacity rating plates on the truck are valid.

The figures show examples.

– Only observe the capacity rating plate on the truck.

⚠ DANGER

Risk of fatal injury from the truck losing stability!

If the permissible loading of the attachments (variant) and the reduced load capacity of the truck and attachment combination is exceeded, there is a risk of loss of stability.

– The permissible loading of the attachments (variant) and the reduced load capacity of the combination of truck and attachment must not be exceeded.

– Observe the information given on the special capacity rating plates on the truck and attachment.

Basic capacity rating plate

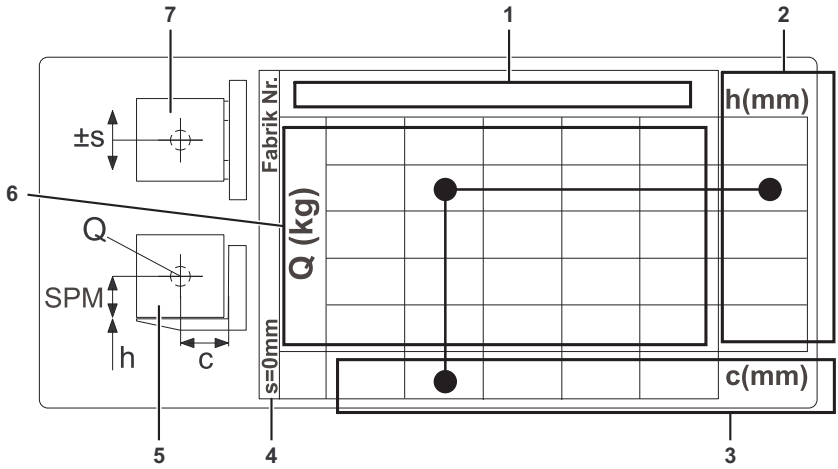

Basic capacity rating plate

1 Designation of the lifting accessories (fork arms or attachment)
2 Lift height "h" [mm]
3 Distance "c" to load centre of gravity from fork back [mm]
4 Sideshift "s" [mm]
5 Side view of load and lifting accessories
6 Load capacity [kg]
7 Top view of load and lifting accessories

There is always at least one capacity rating plate on the truck: the basic capacity rating plate. It shows the load capacity only for fork arms without the attachment. If an attachment is attached, a second capacity rating plate is fitted: the residual load capacity rating plate. This plate shows the load capacity taking the attachment into account. In the case of integrated attachments, only a basic capacity rating plate is created as the integrated devices cannot be easily removed from the truck.

Typical application of a capacity rating plate

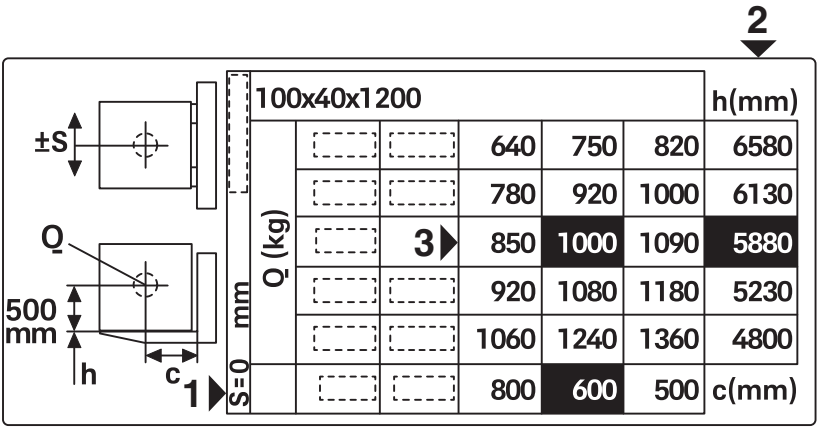

The **example values** used here are **marked in black**.

– To determine the actual load capacity, observe the basic capacity rating plate on the truck.

Illustration of the typical application on the truck

The position numbers in the adjacent graphic correspond to the position numbers on the basic capacity rating plate.

1 Distance between the load centre of gravity and the fork back: 600 mm
2 Permissible lift height: 5880 mm
3 Weight of load to be lifted: 1000 kg

The distance between the load centre of gravity and the fork back is 600 mm (1). The lift height should be 5880 mm (2).

This means that the load must not exceed 1000 kg (3) (load capacity).

By implication, this means that, in this example with the distance between the load centre of gravity and the fork back being 600 mm, a 1000-kg load must not be lifted higher than 5880 mm.

The load capacity specified for certain nominal lifts applies up to this nominal lift. If the lift value of the first line is exceeded, the load capacity from the second line applies up to the lift of the second line.

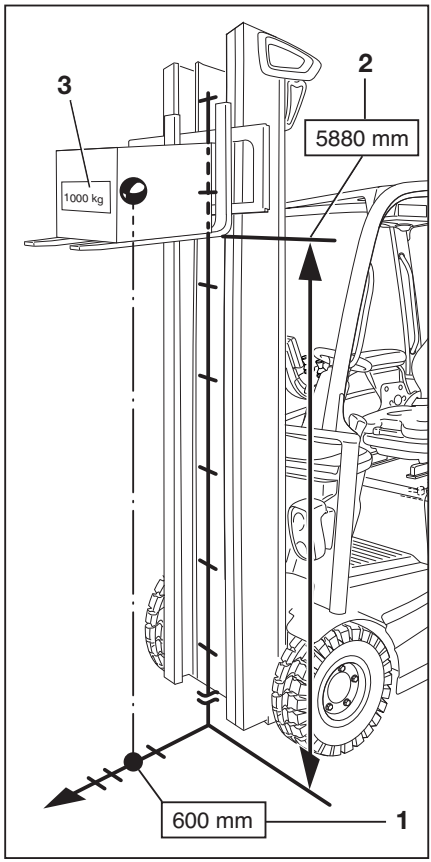

Residual load capacity rating plate for built-in devices and attachments

NOTE

The residual load capacity rating plate for attachments is read according to the same diagram as in the example for the basic capacity rating plate.

Some attachments have a standard sideshift or a large sideshift. As a rule, the standard sideshift is ±100 mm and the large sideshift is 230 mm.

In contrast to the large sideshift, the standard sideshift offers a higher load capacity, but only within the scope of the specified standard sideshift.

A large sideshift enables a strongly off-centre load position. If the load is severely off-centre, the load capacity of the truck will be greatly reduced.

Since non-integrated attachments can be replaced, multiple residual load capacity rating plates for attachments on one truck are possible. The residual load capacity rating plate then applies to the attachment fitted. In the case of integrated attachments, only the applicable capacity rating plate is fitted to the truck.

– If there is a built-in device or attachment with a large sideshift on the truck, take into account the maximum possible sideshift on the capacity rating plate.

▷

XZP150+100x40x1200						h(mm)
S=230mm	Q (kg)		220	260	290	6580
			430	510	560	5870
			500	590	650	5230
			570	670	740	4750
			780	920	1000	4100
			800	600	500	c(mm)

Residual load capacity rating plate for large sideshift, S = 230 mm

A second residual load capacity rating plate for the same attachment but with standard sideshift (usually ±100 mm) may also be fitted on the truck. This residual load capacity rating plate offers a higher load capacity, but only within the scope of the specified standard sideshift. If the standard sideshift is exceeded, the residual load capacity rating plate applies to the maximum possible sideshift. The driver is responsible for complying with the

load capacity and sideshift information on the residual load capacity rating plate. If in doubt, use the load capacity for the maximum possible sideshift.

▷

XZP150+100x40x1200						h(mm)
S=100mm	Q (kg)		430	510	560	6580
			570	670	740	6130
			640	750	820	5880
			710	840	880	5230
			850	1000	1090	4800
			800	600	500	c(mm)

Residual load capacity rating plate for standard sideshift, S = 100 mm

Special capacity rating plate for off-centre loads

If unbalanced loads are regularly transported, a special capacity rating plate for off-centre loads is required. If this plate is required at a later date, contact the authorised service centre. This requires information on the type and appearance of the load.

Picking up loads

To make sure that the load is securely supported, it must be ensured that the fork arms are

sufficiently far apart and are positioned as far as possible under the load.

If possible, the load should rest on the back of the fork.

The load must not protrude too far over the fork tips, nor should the fork tips protrude too far out from the load.

Loads are to be picked up and transported as close to the middle as possible.

⚠ DANGER

Risk of accident from a falling load!

When transporting small items, attach a load safety guard (variant) to prevent the load from falling on the driver.

A closed roof covering (variant) should also be used.

Removable roof panels may not be removed.

Adjusting the fork

▷

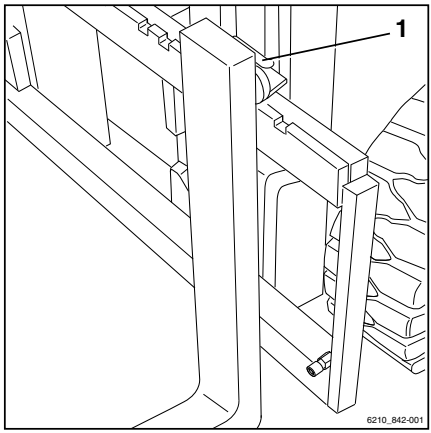

– Lift the locking lever (1) and move the fork arms to the desired position.

– Allow the locking lever to snap back into place.

The load centre of gravity must be midway between the fork arms.

– Only actuate the fork prong positioner (variant) when the fork is not carrying a load.

Danger area

The danger area is the area in which people are at risk due to the movements of the truck, its working equipment, its load-carrying equipment (e.g. attachments) or the load. Also included are the areas where loads could fall or working equipment could fall or be lowered.

⚠ DANGER

Risk of injury!

– Do not step on the fork.

⚠ DANGER

Risk of injury!

– Do not step under the raised forks.

⚠ DANGER

People may be injured in the danger area of the truck!

The danger area of the truck must be completely clear of all personnel, except the driver in his normal operating position. If persons fail to leave the danger area despite warnings:

– Cease work with the truck immediately.

– Secure the truck against use by unauthorised parties.

⚠ DANGER

Danger of death from falling loads!

– Never walk or stand underneath suspended loads.

Transporting pallets

As a rule, loads (e.g. pallets) must be transported individually. Transporting multiple loads at the same time is only permitted:

- when instructed by the supervisor and
- when the technical requirements have been met.

The driver must ensure proper condition of the load. Only safely and carefully positioned loads may be transported.

▷

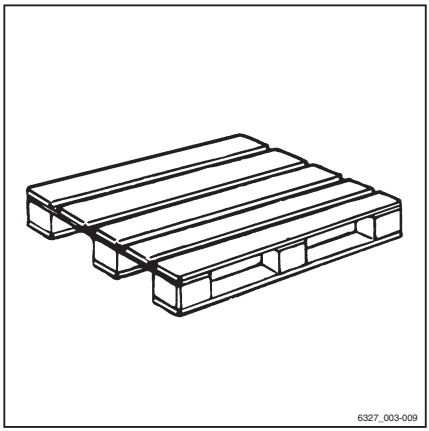

Transporting suspended loads ▷

Before transporting suspended loads, consult the national regulatory authorities (in Germany, the employer's liability insurance associations).

National regulations may place restrictions on these operations, e.g. in Italy.

– Contact the relevant authorities.

– Follow the national regulations for the country in which the truck is being used.

If there are no country-specific regulations for suspended loads in the country of use, observe the following instructions for safe handling.

⚠ DANGER

Risk of accident due to transporting suspended loads!

Suspended loads can begin to swing. Suspended loads that begin to swing can result in the following risks.

– Follow the "Instructions for transporting suspended loads".

Risks due to suspended loads

- Impaired braking characteristics and steering movement
- Tipping over the front axle
- Tipping the truck at right angles to the drive direction
- Risk of crushing of accompanying persons
- Reduced visibility

⚠ DANGER

Loss of stability!

Slipping or swinging suspended loads can lead to a loss of stability and cause the truck to tip over.

– Follow the "Instructions for transporting suspended loads".

Instructions for transporting suspended loads

- Swinging loads must be prevented by using the proper driving speed and driving style (careful steering, braking).
- Hanging loads must be hooked on to the truck in such a way that the harness cannot

shift or release unintentionally and cannot be damaged.

- When transporting suspended loads, suitable aids (e.g. guy wires or supporting poles) must be available so that accompanying persons can guide suspended loads and prevent the loads from swinging.
- Take particular care to ensure that there is no one in the drive direction in the driving lane.
- If, despite this, the load begins to swing, ensure that no person is placed at risk.

⚠ DANGER

Risk of accident due to transporting suspended loads!

– When transporting suspended loads, never perform or end driving and load movements abruptly.

– Never drive on slopes with a suspended load.

– Transporting containers holding fluids as hanging loads is not permitted.

Picking up a load

⚠ DANGER

There is a risk to life from a falling load or from truck components being lowered.

– Never walk or stand underneath suspended loads or raised fork arms.

– Never exceed the maximum load values specified on the capacity rating plate. Otherwise, stability cannot be guaranteed.

– Only store pallets that do not exceed the specified maximum size. Damaged loading equipment and incorrectly formed loads must not be stored.

– Attach or secure the load to the lifting accessory so that the load cannot move or fall.

– Store the load so that the specified aisle width is not reduced by protruding parts.

– Approach the rack carefully, brake gently and stop just in front of the rack.

▷

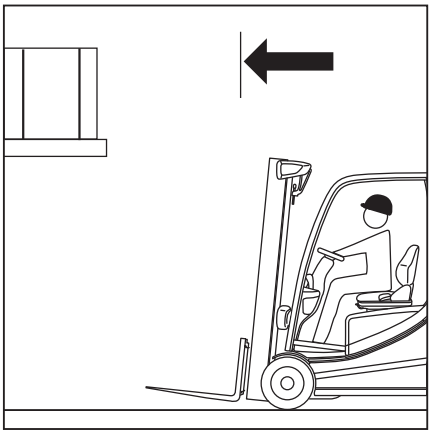

– Position the forks.
– Set the lift mast to vertical.
– Lift the fork carriage to the stacking height.

▷

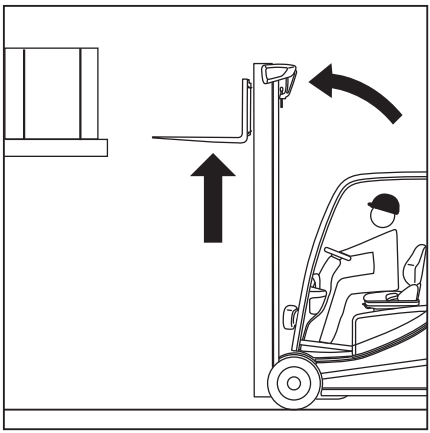

⚠ CAUTION

Risk of component damage!

When the fork is inserted into the rack, take care not to damage the rack or the load.

– Insert the fork as far under the load as possible. Stop the truck as soon as the fork back is resting on the load. The load centre of gravity must be midway between the fork arms. ▷

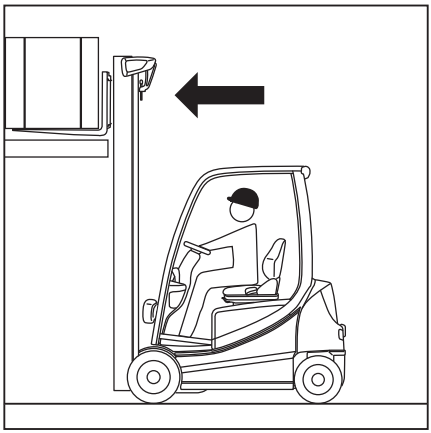

– Lift the fork carriage until the load is resting entirely on the fork. ▷

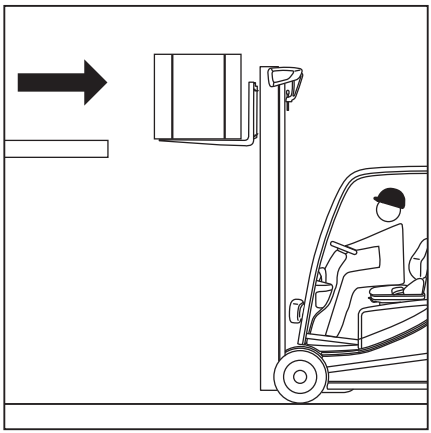

⚠ DANGER

Risk of accident!

– Beware of any people in the danger area.
– Ensure that the roadway behind you is clear.

⚠ DANGER

Due to the risk of tipping, never tilt the lift mast with a raised load!

– Lower the load before tilting the lift mast.

– Reverse carefully and slowly until the load is clear of the rack. Brake gently.

– Lower the load while maintaining ground clearance. ▷

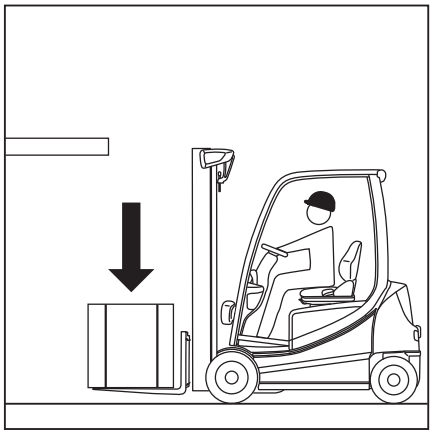

– Tilt the lift mast backwards. ▷

The load can be transported.

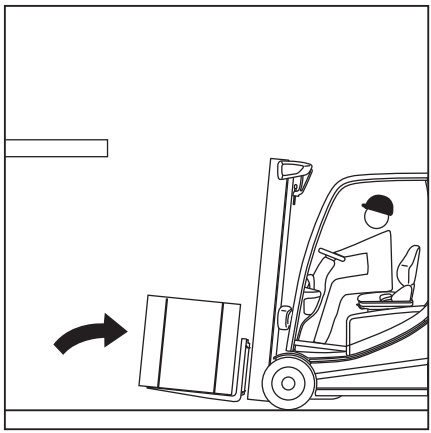

Determining visibility conditions when driving with a load

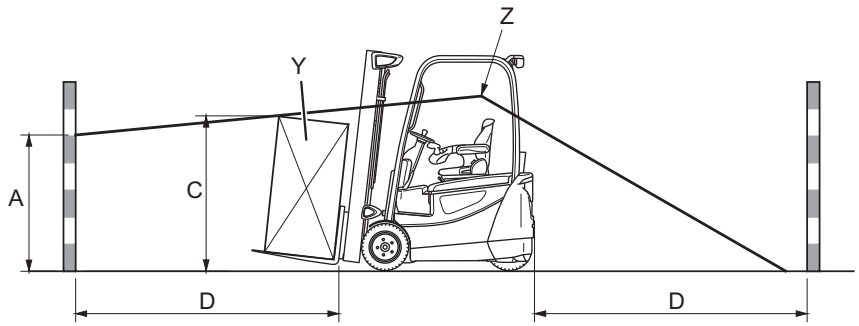

A	Area that is not visible (max. 1085 mm)	Y	Load
C	Load height (in driving position)	Z	Driver's eye level
D	4000 mm (distance to the front from the rear corner of the load when it is positioned on the fork carriage in the driving position)		

The driver's field of vision can be severely limited when driving with a larger load (Y) or with attachments fitted. In this case, safe operation is no longer guaranteed.

Visibility conditions can be evaluated by determining the size of the area that is not visible (A).

If the area that is not visible exceeds 1085 mm (EN16842-2/A3), the visibility conditions are inadequate.

Procedure:

– Sit down on the driver's seat and adopt the seat position.

– Determine the area that is not visible (A) using the load height (C) and the length of the route (D) = 4000 mm.

This area that is not visible (A) must not exceed 1085 mm.

– If the area that is not visible (A) exceeds 1085 mm, take one of the following measures:

- Drive backwards.
- Divide the loads so that the load height (C) is reduced and the area that is not visible (A) becomes smaller than 1085 mm.

Transporting loads

NOTE

Observe the information in the chapter entitled "Safety regulations when driving".

DANGER

The higher a load is lifted, the less stable it becomes. The truck can tip over. The load can fall. There is an increased risk of accidents.

Driving with a raised load and the lift mast tilted forward is not permitted.

- Only drive with the load lowered.
- Lower the load until ground clearance is reached (not over 300 mm).
- Only drive with the lift mast tilted backwards.

- Drive slowly and carefully around corners.

NOTE

Observe the information in the chapter entitled "Steering".

- Always accelerate and brake gently.

NOTE

Observe the information in the chapter entitled "Operating the service brake".

– Never drive with a load protruding to the side (e.g. with the sideshift)! ▷

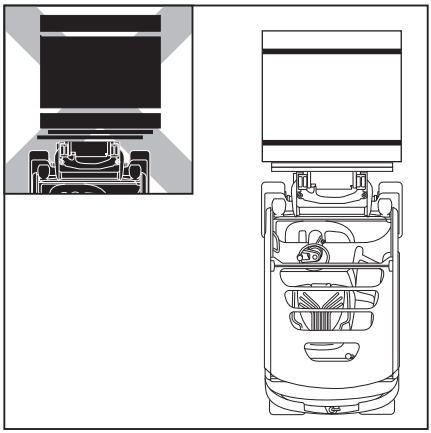

Setting down a load

⚠ DANGER

Risk of accident due to changed moment of tilt!

The load centre of gravity and the moment of tilt move due to tilting the lift mast forwards with a raised load or due to the load slipping. The truck may tip forwards.

– Only tilt the lift mast forwards with a raised lifting accessory when it is directly above the stack.
– When the lift mast is tilted forwards, take particular care to ensure that the truck does not tip forwards and that the load does not slip.

⚠ WARNING

Risk of accident from falling load!

If the fork or the load remains suspended during lowering, the load may fall.

– When removing from stock, move the truck far enough back so that the load and the fork can be lowered freely.

– Drive up to the stack with the load lowered in accordance with regulations. ▷

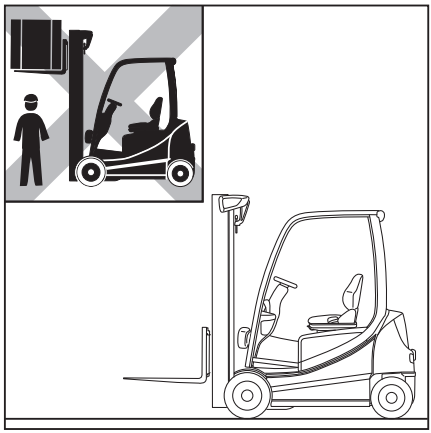

– Set the lift mast to vertical.
– Lift the load to the stacking height.
– Drive the truck towards the rack carefully.

– Lower the load until it rests securely on the rack. ▷

⚠ DANGER

Risk of accident!

– Beware of any people in the danger area.
– Ensure that the roadway behind you is clear.

– Move the truck back until the fork arms can be lowered without touching the stack.
– Lower the fork while maintaining ground clearance.
– Tilt the lift mast backwards and drive away.

Driving on ascending and descending gradients

⚠ DANGER

Risk of fatal injury!

Driving on ascending and descending gradients carries special dangers!

– Always follow the instructions below.

– On ascending and descending gradients, the load must be carried facing uphill.
– It is only permitted to drive on ascending and descending gradients that are marked as traffic routes and that can be used safely.
– Ensure that the ground to be traversed is clean and provides a good grip.
– Do not turn on ascending and descending gradients.
– Do not drive onto or along ascending and descending gradients at an angle.
– Do not park the truck on ascending or descending gradients.
– In case of emergency, secure the truck with wedges so that the truck does not roll away.
– Reduce the driving speed on descending gradients.
– Do not drive downhill faster than the truck can drive uphill on the same incline.
– Determine the maximum permissible speed with a test drive uphill, if necessary.

It is not permitted to drive on long ascending and descending gradients greater than 15% due to the specified minimum braking and stability values.

– Before driving on ascending and descending gradients greater than 15%, consult the authorised service centre.

The process of placing loads into stock and removing loads from stock while on an ascending or descending gradient is not permitted!

– Always place loads into stock and remove loads from stock on a horizontal plane.

Driving onto lifts

▷

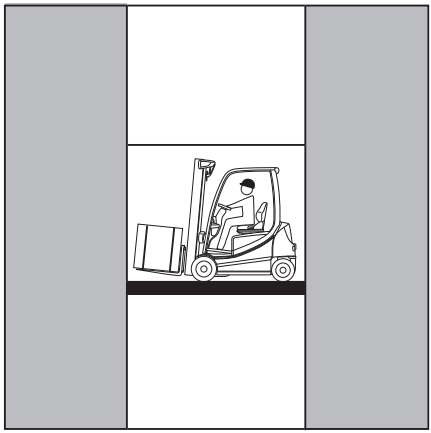

The driver may only use this truck on lifts with a sufficient load capacity and for which the operating company has been granted authorisation (refer to the section entitled "Definition of responsible persons").

⚠ DANGER

There is a risk of fatal injury from being crushed or run over by the truck.

– There must not be any persons already in the lift when the truck is driven into the lift.

– Persons are only permitted to enter the lift once the truck is secure, and must exit the lift before the truck is driven out.

Determining the total actual weight

▷

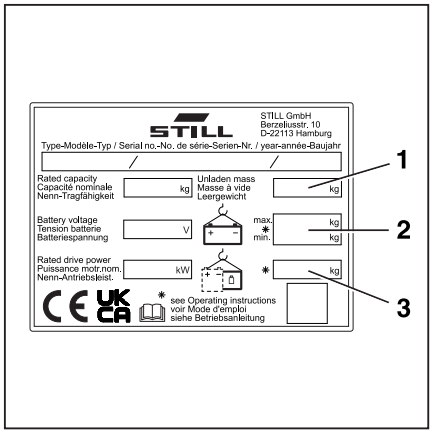

– Park the truck securely and switch it off.

– Determine the unit weights by reading the truck nameplate and, if necessary, the nameplate on the attachment (variant) and/or by weighing the load to be lifted.

– Add together the determined individual weights to obtain the total weight of the truck:

Net weight (1)
\+ Max. permissible battery weight (2)
\+ Ballast weight (variant) (3)
\+ Net weight of attachment (variant)
\+ Weight of the load to be lifted
\+ 100 kg allowance for driver
= Total actual weight

– Drive the truck into the lift with the forks facing forwards. Make sure not to touch the shaft walls.

– Park the truck securely in the lift and switch it off to prevent uncontrolled movements of the load or the truck.

Driving on loading bridges

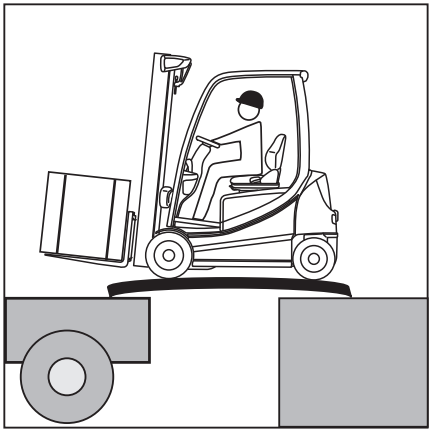

⚠ DANGER

Risk of accident from the truck crashing!

Steering movements can cause the rear of the truck to veer off the loading bridge towards the edge. This may cause the truck to crash.

For three-wheel trucks, the useable area of the loading bridge must be enclosed so that the rear drive wheel does not fall through.

The lorry driver and the forklift truck driver must agree on the departure time of the lorry.

– Establish the departure time of the lorry.
– Determine the total actual weight of the truck.
– Before driving over a loading bridge, observe the company directive for the loading bridge.
– Make sure that the loading bridge is properly attached and secured and has a sufficient load capacity (e.g. lorry, bridge).
– Ensure that the lorry onto which you will be driving is secured to prevent it from shifting and that it can support the load of the truck.

Determining the total actual weight

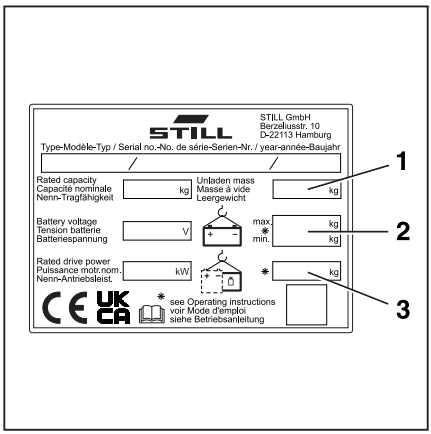

– Park the truck securely.
– Determine the unit weights by reading the truck nameplate and, if necessary, the nameplate on the attachment (variant) and/or by weighing the load to be lifted.
– Add together the determined individual weights to obtain the total weight of the truck:

Net weight (1)
\+ Max. permissible battery weight (2)
\+ Ballast weight (variant) (3)
\+ Net weight of attachment (variant)
\+ Weight of the load to be lifted
\+ 100 kg allowance for driver
= Total actual weight

– Drive slowly and carefully on the loading bridge.

Lift height-dependent assistance systems

Optical lift height measuring system (variant)

Design and function

This truck can be fitted with an optical lift height measuring system as a variant. This system is a prerequisite for the assistance systems described in this chapter. As soon as the truck is switched on, the system is ready for use immediately. This system consists of an LED lift height sensor (2) on the side at the bottom of the lift mast and a reflector (1) on the fork carriage.

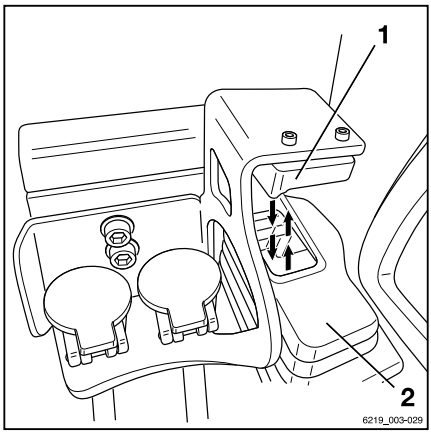

NOTE

The LED/sensor unit and reflector are adjusted at the factory. Follow-up adjustments are carried out by the authorised service centre.

The LED lift height sensor constantly emits a light signal that is reflected by the reflector. The truck control unit calculates the current lift height based on the travel time of the light signal.

NOTE

Although the infrared light of the LED lift height sensor is not dangerous for the human eye, you should avoid looking directly into the light source.

Cleaning

It is recommended that the LED sensor glass (2) and the reflector (1) are checked before starting work and, if required, cleaned. The cleaning frequency depends on the application conditions of the truck. The quality of the light signal may also be reduced as a result of heavy rain or fogging up of the sensor.

If the light signal is too weak, the LED sensor glass (2) and the reflector (1) must be cleaned. Three dashes are shown on the display-operating unit instead of the lift height display.

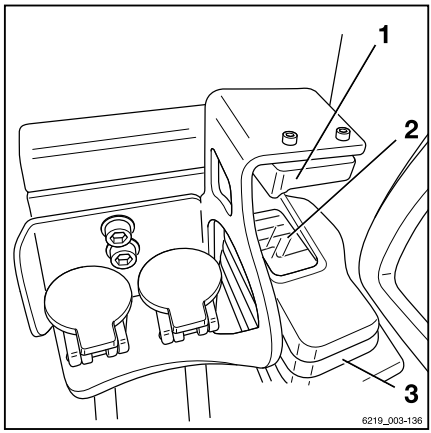

The message `Clean lift height sensor` appears in the display.

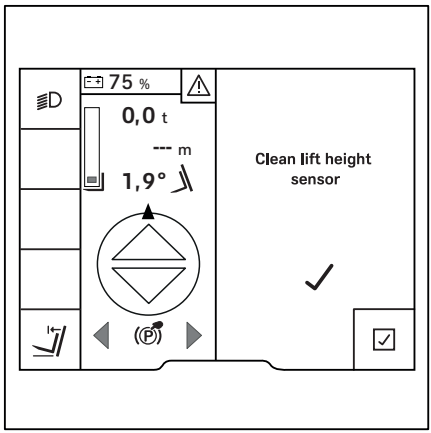

– Clean the sensor glass (2) and the reflector (1) using a soft cloth and water.

– Also clean the dust protection cover (3), if necessary.

A small amount of cleaning agent can be added to the water.

⚠ CAUTION

Component damage caused by incorrect cleaning.

The sensor glass and the reflector can be damaged as a result of incorrect cleaning procedures.

– The components must **not** be cleaned using dry materials.

– Do **not** use agents containing hydrocarbons.

Agents containing hydrocarbons include:

- Acetone
- Methanol
- Ethanol
- Propanol

⚠ CAUTION

Risk of damage to the LED lift height sensor through high-pressure cleaning!

A high-pressure cleaner can damage the LED lift height sensor due to the penetration of water. This can result in incorrect measurements.

– Do **not** direct the spray from a high-pressure cleaner at the LED lift height sensor.

Eliminating malfunctions

NOTE

A misaligned LED lift height sensor or bent reflector must be adjusted only by the authorised service centre.

– If the malfunction in the system persists, please contact the authorised service centre.

If a malfunction occurs, the message `Check lift height sensor and reflector` appears in the display-operating unit. If the malfunction no longer exists or has been rectified, the system is automatically available again.

Truck functions that are dependent on the lift height are restricted in the event of a malfunction in the height measurement system. Malfunctions must therefore be rectified immediately.

Contamination

The driver can resolve a temporary interruption of the light signal due to contamination or foreign objects in the signal path. See the section entitled "Cleaning".

Condensation/icing

If the truck switches between a very cold environment, e.g. in a cold store, and normal surroundings, ice or condensation may form on the sensor. The signal may then briefly fail until the condensation or icing has subsided.

Emergency operation in the event of malfunctions

In the event of a malfunction in the height measurement system, the truck switches to emergency operation.

In emergency operation, the assistance systems listed below that are dependent on the lift height are not available:

- Lift height display
- Fork wear protection
- Lift mast transition damping

Due to the lack of a measured value, the assistance systems that are dependent on the lift height will instead use calculated values for the lift height.

For safety reasons, the calculated value is always below the actual lift height value.

The following assistance systems can continue to be operated, but with the restrictions of emergency operation:

- **Intermediate lift cut-out**

– Release the lifting operating device so that it can return to the zero position.

The fork carriage can then continue lifting at a reduced speed.

- **Lift mast end-stop damping**

– Release the lifting operating device so that it can return to the zero position.

⚠ WARNING

Risk of collision with the hall ceiling.

The fork carriage can now be lifted to the maximum lift height without limitation.

– Take note of the height of the ceiling.

- **Speed reduction when the fork carriage is raised**

The speed reduction activates at a lower lift height than in normal operation.

Lift height display (variant) ▷

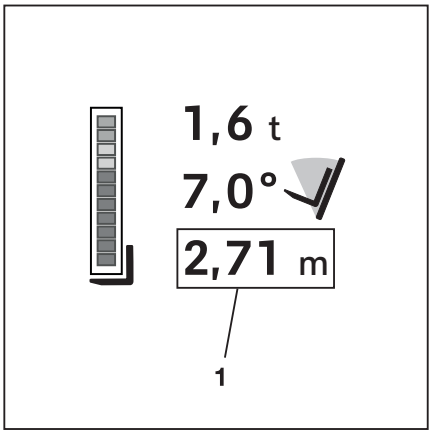

If the truck is equipped with the optical lift height measuring system, the current lift height (1) appears permanently in the display-operating unit.

The lift height displayed corresponds to the height of the bottom edge of the fork arms. If desired, the authorised service centre can set a different value. If a different attachment is installed, the authorised service centre must adjust this value.

The system works across the entire lift range, from ground level up to the maximum lift height.

When properly configured, the measurement inaccuracy is as follows:

Repeatability	±5 mm
Maximum measurement inaccuracy	±45 mm

NOTE

If the prerequisites on the truck have changed, e.g. the tyres are worn, the value displayed for the lift height may differ more from reality. In this case, the lift height display must be zeroed.

– See the section entitled "Zeroing the assistance systems".

Easy Target (variant)

"Easy Target" is an additional assistance function for the lift height measurement.

With this assistance function, the fleet manager can use their authorisation to define and save regularly approached lift heights. Up to ten different lift heights can be set for ten different areas of the warehouse.

"Easy Target" works across the entire fork lift range, from ground level up to the maximum lift height of the truck.

For the various operating devices for the hydraulic functions, the approached lift heights are stored as follows.

- Multi-lever, mini-lever and Fingertip operation:
  Function key
- Joystick 4Plus operation:
  Shift key "F"

For harmonisation, the function key and the shift key "F" are referred to as the "F button" in the next sections.

Configuring Easy Target

To use the function, the desired lift heights must be configured. The desired lift heights can be entered directly in the display-operating unit. In addition, the "Automatic mast vertical positioning" variant must be set up.

NOTE

See the sections "Automatic mast vertical positioning" in the subchapter "Tilt angle-dependent assistance systems".

– Stop the truck.

– Actuate the parking brake.

– Activate the "Access authorisation for the fleet manager".

Defining the lift heights by entering them in the display-operating unit

– Press the button.

– Press the softkey.

– Press the `Truck settings` softkey.

– Press the `easy Target` softkey.

Lift height-dependent assistance systems

A selection with the available areas of the warehouse opens. ▷

– Press the appropriate softkey for the desired area of the warehouse to define a lift height.

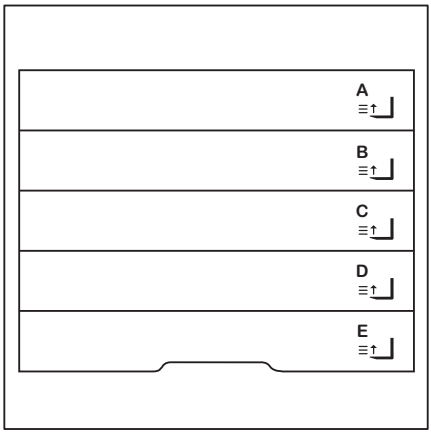

A selection with the lift heights that can be defined for this area of the warehouse opens. ▷

NOTE

This example shows the available, definable lift heights for area "C" of the warehouse. This areas of the warehouse can be name individually by the authorised service centre.

– Press the appropriate softkey for the desired lift height.

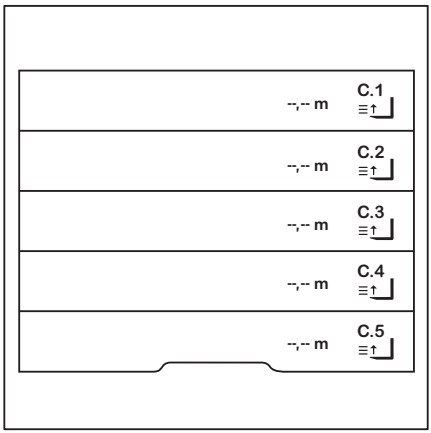

In this menu, you can define the desired lift height.

– Enter the lift height using softkeys `0 to 9`.

– To `save`, press the ☰ button.

The menu closes. The selection with the lift heights that can be defined for this area of the warehouse opens.

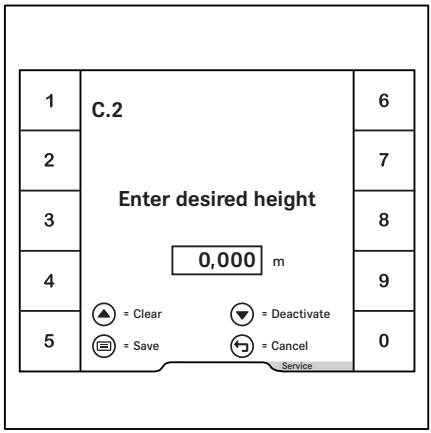

NOTE

The defined areas of the warehouse can also be displayed as a favourite. For information on how to do this, see the original operating instructions for the display-operating unit.

Defining the lift heights by approaching the lift height

– As described in the previous section, select the desired area of the warehouse to define a lift height.

– Release the parking brake and drive to the single pallet position for which the lift height is to be defined.

– Lift the fork carriage to the desired lift height.

– When the desired lift height is reached, stop the lifting operation.

– To confirm, press the ✓ softkey.

The lift height is stored.

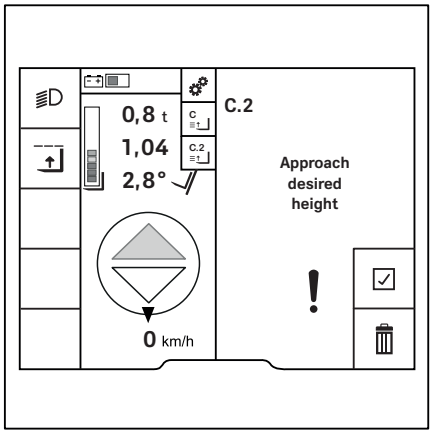

The stored lift height is displayed on the previously selected storage space. ▷

In this example, the lift height is 1.04 m.

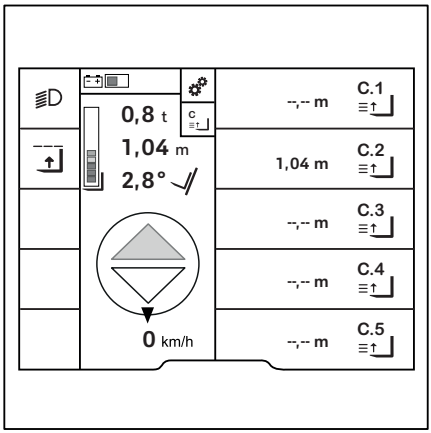

Operating Easy Target ▷

To use Easy Target, at least one lift height must be stored. The procedure for saving a lift height is described in the section "Easy Target Configuration".

Using the "load measurement" function, the truck automatically detects whether there is a load on the fork.

The assistant for placing a load in stock or removing a load from stock detects if the driver wants to store or remove something. In this example, the stock removal assistant (1) is active. The orange activation bar next to the symbol indicates this. To switch to the stock placement assistant, push the softkey next to the symbol.

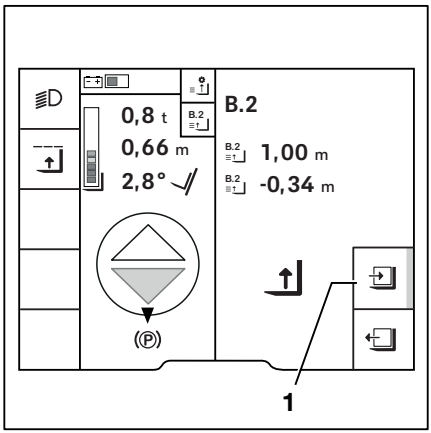

NOTE

If the load is less than 150 kg, the load may not be detected. A stock placement operation is then started.

– In this case, push the softkey to switch to the stock removal assistant.

Select the desired area of the warehouse either in the function menu "Load ▸ Easy Target" or via the favourites. The adjacent example shows the selection via a favourite (2).

– Approach the selected lift height of the area of the warehouse with the fork carriage.

The next steps required for this are shown on the display. The symbols described below are used for operation.

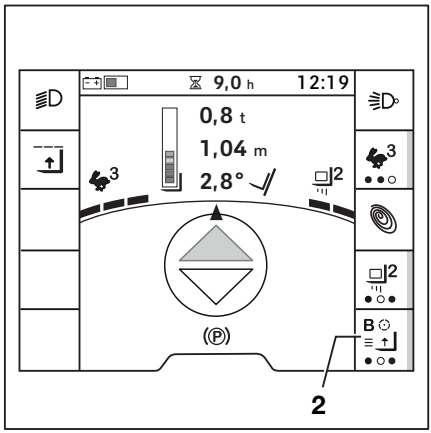

Symbols used and their meanings

	Place in stock
	Remove from stock
	Lift the fork carriage
	Lower the fork carriage
	Retract fork
	Extend fork

Placing the load in stock

The adjacent example shows the direction of movement of lifting (4) to the next stored lift height (3). The distance until the next lift height (5) is reached is displayed after the lift height has been selected.

– Move the operating device for the hydraulic function in the desired direction.

– Press the "F button" and hold it down.

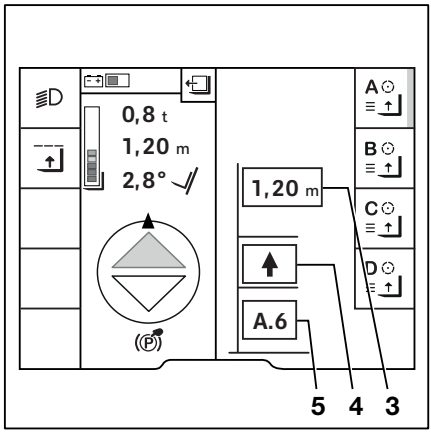

3 Next stored lift height
4 Current direction of movement of the fork carriage
5 Next height in the direction of movement

– When the fork carriage approaches the desired lift height, release the "F button". ▷

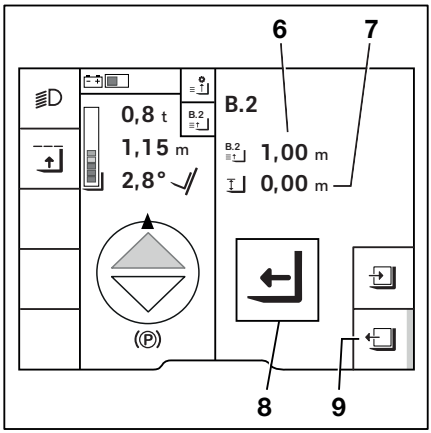

The display shows the height of this lift height 1.00 m (6) and the distance of the fork carriage to this lift height 0.00 m (7).

When the lift height is reached, the fork carriage stops automatically.

The orange activation bar next to the "Place in stock" symbol (9) indicates that the stock placement assistant is active.

The stock placement assistant gives the instruction:

– Move the load into the rack (8).

After the load has been placed in stock, the symbol indicates that the load must next be lowered.

– Lower the fork carriage. ▷

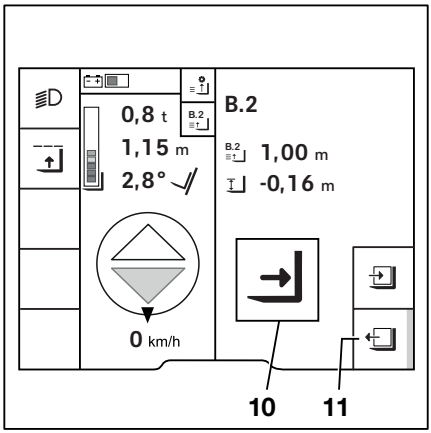

The fork carriage is automatically lowered only until the load has been set down. The fork carriage also stops if the operating device is still actuated.

The orange activation bar next to the "Place in stock" symbol (11) indicates that the stock placement assistant is active.

The stock placement assistant gives the instruction:

– Move the load out of the rack (10).

Removing the load from stock

Select the desired area of the warehouse either in the function menu "Load ▸ Easy Target" or via the favourites. The adjacent example shows the selection via a favourite (12).

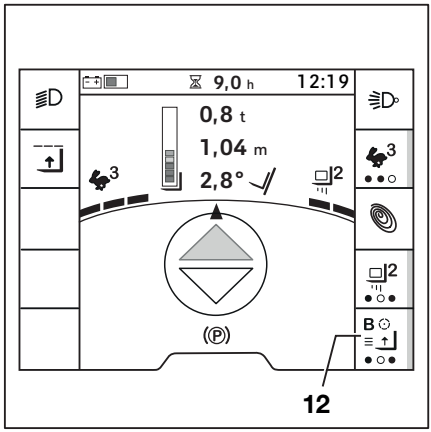

- Approach the selected area of the warehouse.
- Move the operating device for the hydraulic function in the desired direction.

After pressing the "F button", the display shows which stored lift height is reached next in the current lift direction.

- When the operating device is moved, press and hold the "F button".
- When the fork carriage approaches the desired lift height, release the "F button".

When the lift height is reached, the fork carriage stops automatically. It is also taken into account that the load is on a pallet.

- Move the fork into the rack.

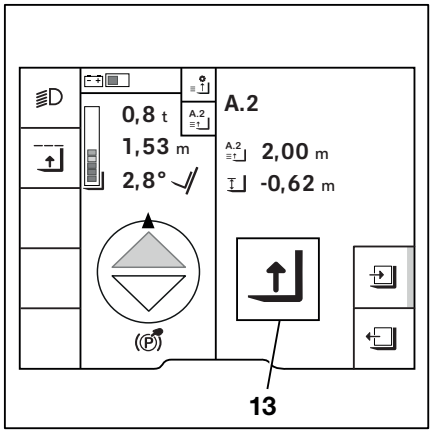

The symbol ⇡ (13) indicates that the load must be raised next.

- Raise the fork carriage.

The fork carriage is automatically raised only until the load can be removed from the rack. The fork carriage also stops if the operating device is still actuated.

The orange activation bar next to the "Remove from stock" symbol indicates that the stock removal assistant is active.

The display indicates that you need to reverse.

As soon as the "backwards" drive direction has been selected, the process is complete. The fork carriage reacts to the movements of the lifting and lowering operating devices again.

Intermediate lift cut-out (variant) ▷

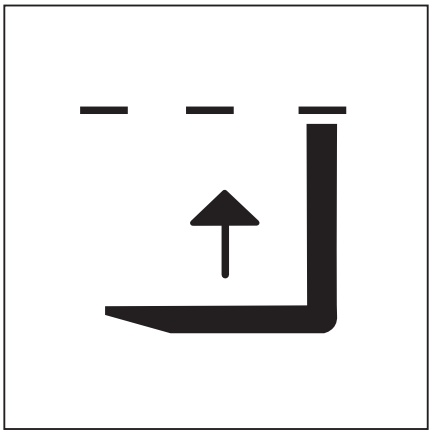

This function interrupts the lifting process at a set lift height. The intermediate lift cut-out function is useful if the fork carriage is frequently lifted to a particular lift height.

There are two options when buying the truck:

1 When buying the truck, the lift heights at which the intermediate lift cut-out takes effect are defined.

  These lift heights are then set and activated on delivery.

2 No lift heights are defined when the truck is bought.

  The lift heights themselves are configured and defined with the "Access authorisation for the fleet manager". See "Configuration by the fleet manager" in this section.

NOTE

Check the lift heights set here before use via the `Intermediate lift cut-out` *menu.*

NOTE

The fleet manager can use his access authorisation to set the lift heights at which the intermediate lift cut-out takes effect. If no fleet manager access is enabled, the authorised service centre must set the desired lift heights.

The intermediate lift cut-out is always active when the truck is switched on. If the function is switched off, it is active again the next time the truck is switched on.

During the lifting operation, the active intermediate lift cut-out is indicated by the grey symbol . This means that the fork is located below the intervention height.

If the symbol appears in black, the fork is just below the intervention height.

NOTE

The display always displays the next lift limit that is in the path of the current lifting movement. The next lift limit at which the function will intervene is highlighted in grey in the display. As soon as the fork carriage nears the lift limit and the function intervenes, the display turns black.

Lifting beyond the current lift limit

To lift beyond the current lift limits, proceed as follows:

– When the fork carriage reaches the set lift limit and stops automatically, move the operating device to the zero position.

– Then push the operating device back into the "lifting" direction.

– You now have one second to bring the operating device back to the zero position and then move the operating device in the "lifting" direction again.

The fork carriage is raised higher.

If the symbol disappears, the fork is at or above the intervention height.

If the fork carriage is lowered to below the configured lift height for the intermediate lift cut-out, the intermediate lift cut-out function is switched on again.

Option: Lifting beyond the intermediate lift cut-out using the "F button"

Optionally, the authorised service centre can configure the function so that the intermediate lift cut-out is suspended by pressing the "F" button on the operating devices for the hydraulic functions.

– Lift the fork carriage until it stops at the configured lift height.

– Release the "lifting" operating device and push the "F" button.

The black symbol disappears. The function is suspended for a short period.

– Continue lifting within one second, as otherwise the function will intervene again. If the

function intervenes again, the black symbol will reappear.

Switching off the intermediate lift cut-out

– Press the button.

The first menu level appears.

– Press the softkey.

– Press the softkey.

The orange-coloured activation bar next to the softkey goes out.

The symbol disappears from the main display.

The function is switched off until the next time the truck is restarted.

Configuration by the fleet manager

– Activate the "Access authorisation for the fleet manager".

– Press the button.

– Press the softkey.

– Press the `Truck settings` softkey. ▷

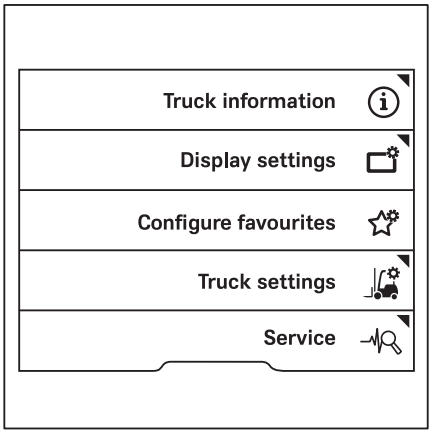

– Press the `Lift cut-out` softkey. ▷

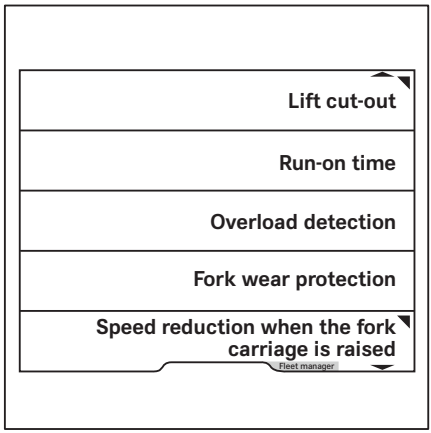

This menu offers three storage locations. ▷

– To configure storage location 1, press the `Intermediate lift cut-out 1` softkey.

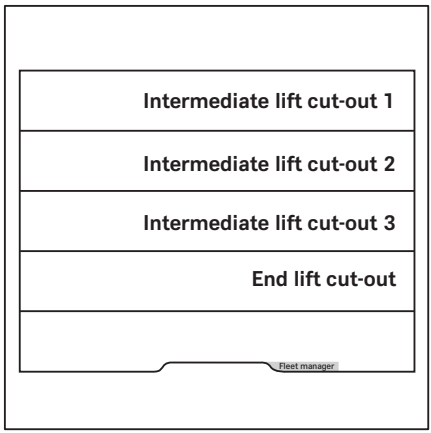

In this menu, you can define the desired lift height. ▷

– Enter the lift height using softkeys `0 to 9`.

– To `save`, press the ☰ button.

– To `activate`, press the scroll button ▽.

The menu closes. The storage locations are displayed. An orange activation bar indicates that the `intermediate lift cut-out 1` is activated.

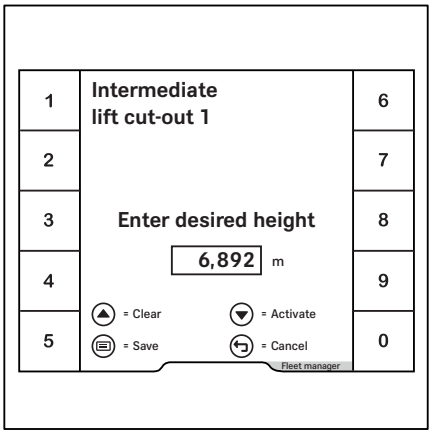

– To deactivate the `intermediate lift cut-out 1`, press the `Intermediate lift cut-out 1` softkey. ▷

– Press the scroll button ▽.

The `intermediate lift cut-out 1` is deactivated. The orange activation bar goes out.

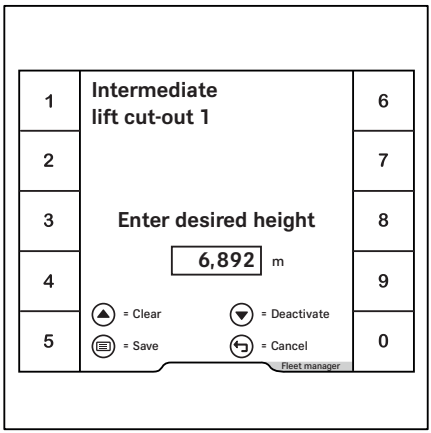

Lift transition damping (variant)

This assistance system, in conjunction with the optical lift height measuring system, ensures that the lifting speed and lowering speed are adjusted at the lift mast transition points. As a result, the inner lift masts move in and out of the outer lift mast smoothly and without jolting. The lifting and lowering procedures are damped on telescopic lift masts, NiHo lift masts and triple masts. This protects the load against jerking movements.

Lift mast end-stop damping (variant)

This assistance system, in conjunction with the optical height measuring system, ensures that the fork carriage reaches the lifting stops gently. This prevents the lifting movement from stopping abruptly.

If the truck is equipped with the "automatic mast vertical positioning" variant, the tilt stops will also be approached gently. This is done by the "tilt end stop damping" assistance system. This increases the comfort for the driver.

End lift cut-out (variant)

▷

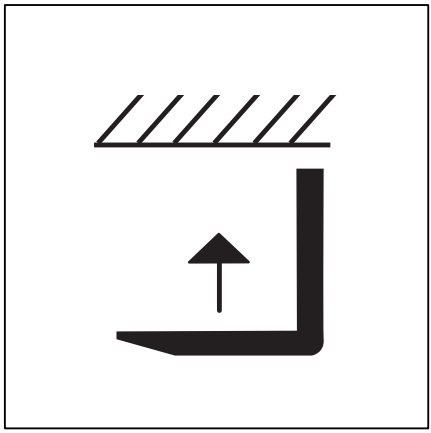

This assistance system limits the lift height of the fork carriage.

This assistance system does not release the driver from the obligation to observe the "Safety regulations for handling loads".

The end lift cut-out is active by default when the truck is switched on. The symbol appears in the display. It can be switched off if required. When the truck is switched on again, it is active again.

NOTE

Check the lift heights set here before use via the `End lift cut-out` *menu.*

Switching off the end lift cut-out

– Stop the truck.

– Apply the parking brake.

– Press the button.

The first menu level appears.

– Press the softkey.

– Press the softkey.

The symbol goes out. The end lift cut-out is switched off.

– To switch the end lift cut-out on again, press the softkey again.

NOTE

The maximum lift height cannot be modified by the driver. It can be changed either by the authorised service centre or with the "Access authorisation for the fleet manager" via the display-operating unit.

Configuration by the fleet manager

– Activate the "Access authorisation for the fleet manager".

– Press the button.

– Press the softkey.

– Press the `Truck settings` softkey. ▷

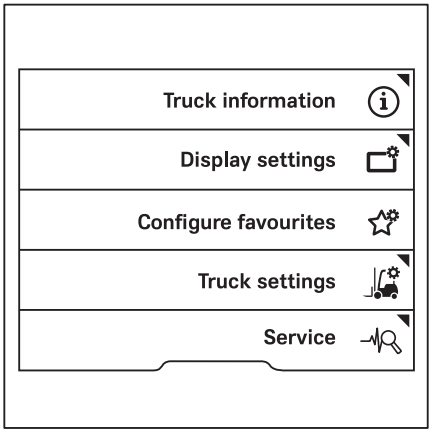

– Press the `Lift cut-out` softkey. ▷

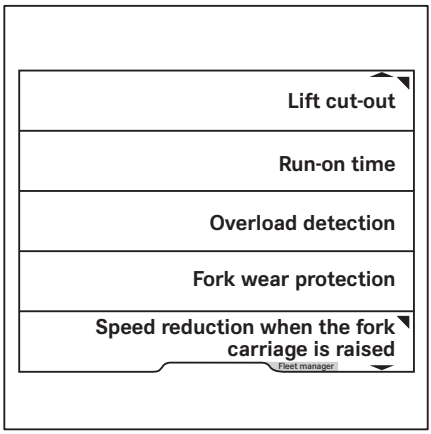

– Press the `End lift cut-out` softkey. ▷

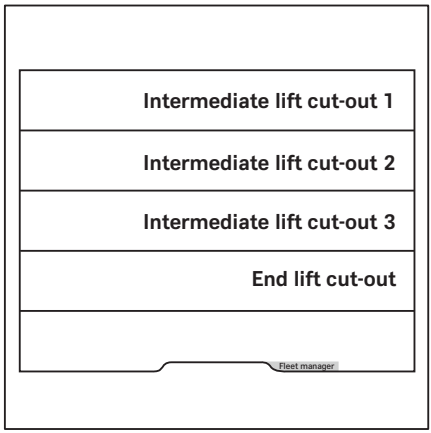

In this menu, you can define the desired lift height. ▷

– Enter the lift height using softkeys `0 to 9`.

– To `save`, press the ☰ button.

– To `activate`, press the scroll button ▽.

The menu closes. An orange activation bar indicates that the `End lift cut-out` is activated.

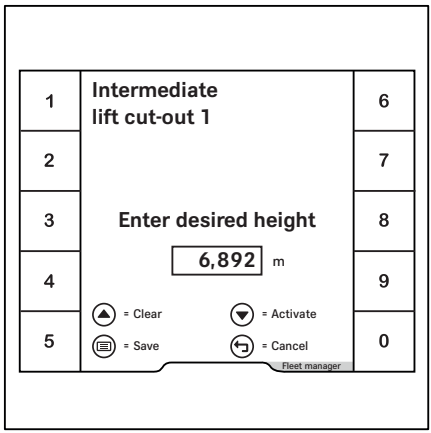

– To deactivate the `End lift cut-out`, press the `End lift cut-out` softkey. ▷

– Press the scroll button ▽.

The `End lift cut-out` is deactivated. The orange activation bar goes out.

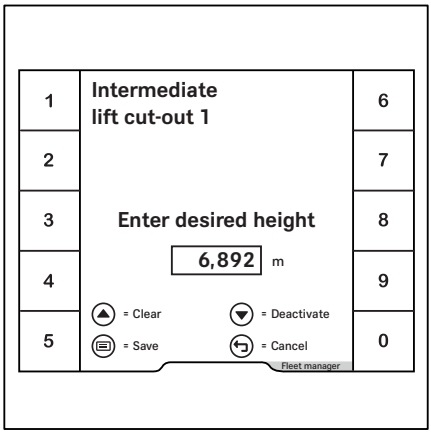

Speed reduction when the fork carriage is raised (variant)

If the fork carriage is lifted to a height above 500 mm, this assistance system automatically reduces the speed of the truck.

NOTE

This lift height can be changed up to 500 mm either by the authorised service centre or with the "Access authorisation for the fleet manager" via the display-operating unit.

Configuration by the fleet manager

Entering the lift height

– Activate the "Access authorisation for the fleet manager".

– Press the ☰ button.

– Press the ⚙ softkey.

– Press the `Truck settings` softkey. ▷

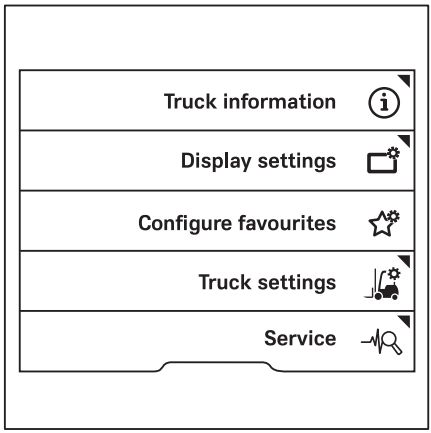

– Press the `Speed restriction for lift` softkey. ▷

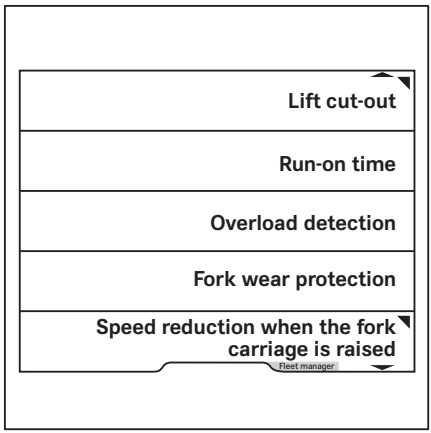

– Press the `Lift height` softkey. ▷

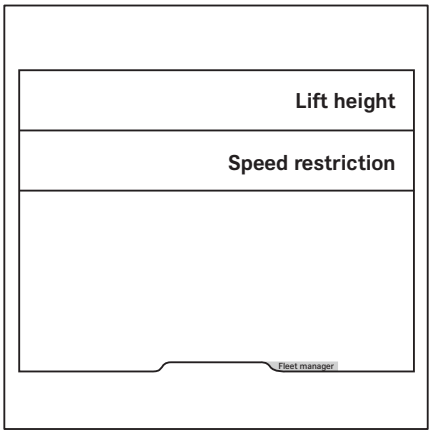

In this menu you can define the desired height. ▷

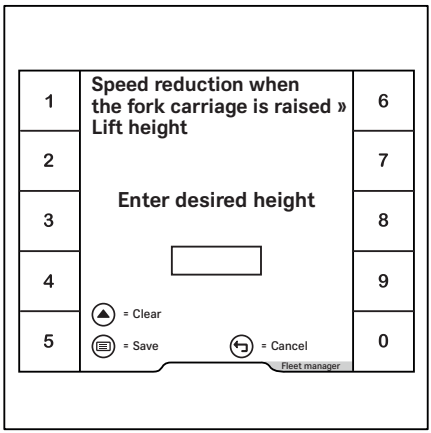

NOTE

The assistance system intervenes automatically from 500 mm. Thus, the height can only be freely selected up to 500 mm.

– Enter the height using softkeys `0 to 9`.

– To `save`, press the button.

The menu closes.

Entering the speed restriction

The maximum speed can be defined, just like the lift height.

– Activate the "Access authorisation for the fleet manager".

– Press the button.

– Press the softkey.

– Press the `Truck settings` softkey. ▷

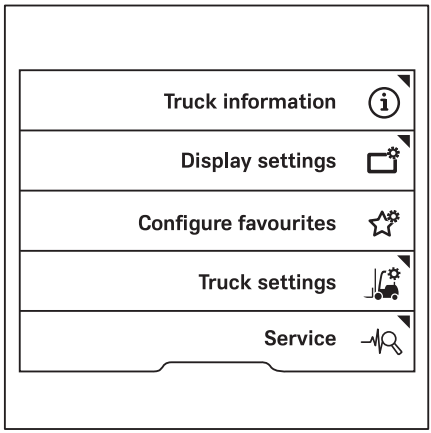

– Press the `Speed restriction for lift` softkey. ▷

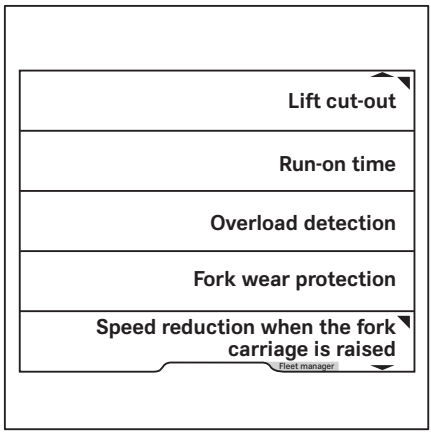

– Press the `Speed restriction` softkey. ▷

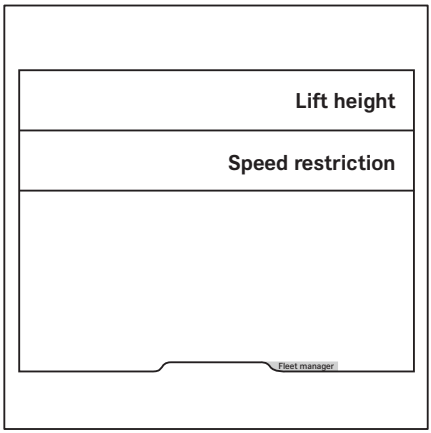

In this menu you can define the maximum speed. ▷

– Enter the speed using softkeys `0 to 9`.

– To `save`, press the ▤ button.

The menu closes.

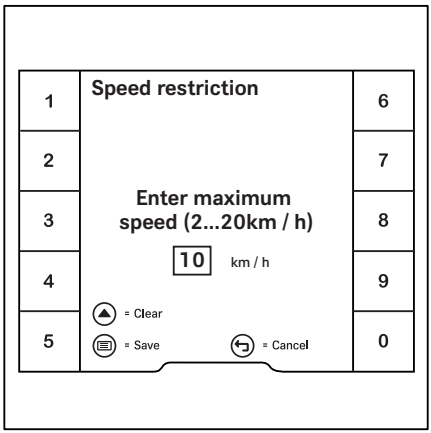

Electrical fork wear protection (variant)

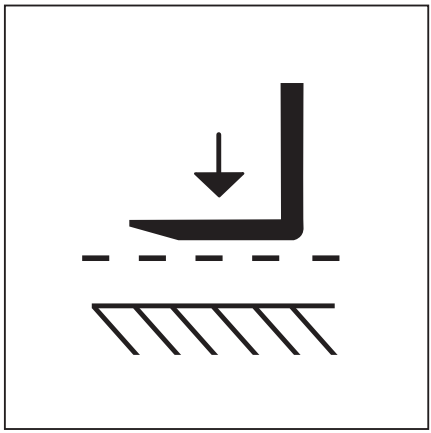

This assistance system, in conjunction with the optical height measuring system, ensures that the fork arms do not touch the ground. The correct height for inserting the forks in a pallet can also be configured. Since the fork must always be lowered completely when the truck is safely parked, the fork wear protection can also be temporarily suspended. See the following section "Lowering the forks completely".

NOTE

The desired height of the fork wear protection can be changed either by the authorised service centre or with the "Access authorisation for the fleet manager" via the display-operating unit.

The fork wear protection function is always active when the truck is switched on. The "fork wear protection" symbol appears in the display. Only the authorised service centre may deactivate the function.

- If the symbol is grey, the assistance system is switched on.
- If the symbol is black, the assistance system is taking effect.
  The fork carriage does not lower to a level that is higher than the set level.

Lowering to the ground

NOTE

The fork wear protection cannot be switched off permanently. The fork wear protection can be temporarily deactivated to lower the fork arms to the ground and securely park the truck.

– Lower the fork carriage until the fork wear protection function intervenes.

– Release the "lower" operating device.

The fork wear protection is switched off.

– To lower the fork to the ground fully, activate the "lower" operating device again.

NOTE

Alternatively, the authorised service centre can parametrise the "F" button to cancel the fork wear protection for the complete lowering of the fork.

NOTE

When you change fork arms, the fork wear protection must be zeroed.

– See the section entitled "Zeroing the assistance systems".

Configuration by the fleet manager

The height of the fork wear protection can be configured, for example, for retraction into pallets with a different height or uneven ground.

– Activate the "Access authorisation for the fleet manager".

– Press the button.

– Press the softkey.

– Press the `Truck settings` softkey. ▷

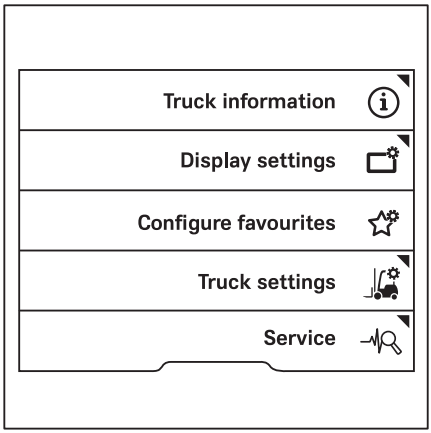

– Press the `Fork wear protection` softkey. ▷

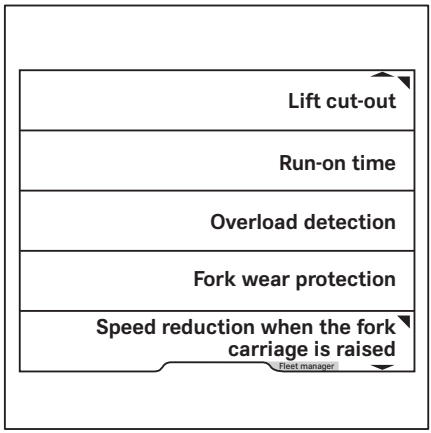

In this menu you can define the desired height. ▷

– Enter the height using softkeys `0 to 9`.
– To `save`, press the ☰ button.

The menu closes.

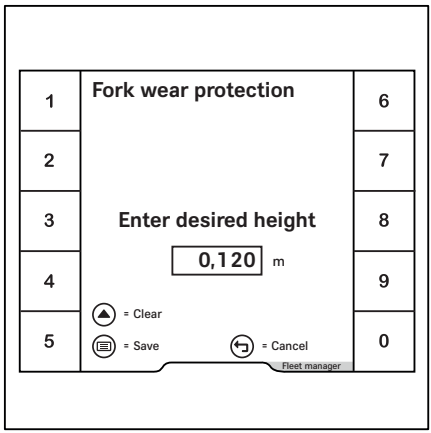

Tilt angle-dependent assistance systems

Mast tilt angle display (variant) ▷

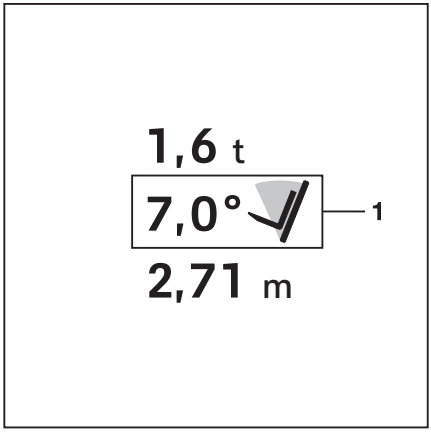

Knowing the actual tilt angle of the lift mast makes it easier to place loads into stock and remove loads from stock. If the truck is equipped with the "mast tilt angle display" assistance system, the lift mast tilt angle (1) is shown on the display.

NOTE

When replacing worn-out pairs of tyres or when the front and rear tyres are worn to different levels, the mast tilt angle display must be zeroed.

– See the section entitled "Zeroing the assistance systems".

Tilt end stop damping (variant)

This assistance system ensures that the movement to the end positions is smooth. This protects the load against jerking movements.

Automatic mast vertical positioning (variant) ▷

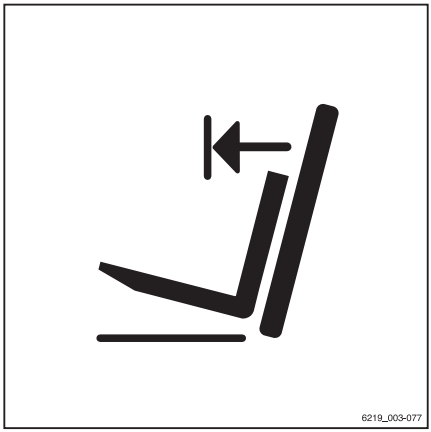

CAUTION

Risk of damage to property due to the lift mast colliding with racks or other objects!

– Before using the "automatic mast vertical positioning" assistance system, position the truck at a sufficient distance from racks and other objects.

The "automatic mast vertical positioning" assistance system can be used to set down the goods so that the goods are exactly vertical, e.g. paper rolls. This prevents damage when setting down the load. "Automatic mast vertical positioning" functions when tilting forwards. A further variant is available which also functions when tilting backwards. The tilt cylinders run into the end stops gently to prevent hard vibrations and impacts. Oscillating motions of the truck are minimised, thus increasing work safety. Automatic mast vertical

positioning reduces wear on various components, thereby reducing repair costs.

The "automatic mast vertical positioning" assistance system consists of the following individual functions:

- Display of the "Automatic mast vertical positioning" feature
- Automatic startup of the "Automatic mast vertical position" feature

The truck can also be equipped with only the "mast tilt angle display" feature.

NOTE

Check the function of automatic mast vertical positioning whenever the truck is used.

– See the section entitled "Function checking of the automatic mast vertical positioning function".

– Press the softkey.

The symbol appears in the display.

– Tilt back the lift mast until it reaches the end stop.

– Tilt the lift mast forwards.

The lift mast stops in the vertical position.

NOTE

The lift mast also stops in the vertical position if it is tilted forwards by ≥ 3° from a backward tilt.

NOTE

The automatic mast vertical positioning must be calibrated in order to ensure accuracy at all times. The "access authorisation for the fleet manager" is required for the calibration. This access is required:

- *When placing loads into stock and removing loads from stock on HGV ramps*
- *In the event of tyre wear*
- *If the lift mast is obviously not in the vertical position*

– See the section entitled "Calibrating the automatic mast vertical positioning".

Function checking of the automatic mast vertical positioning function (variant)

⚠ CAUTION

Risk of damage to property due to the lift mast colliding with racks or other objects!

– Before using the "automatic mast vertical positioning" assistance system, position the truck at a sufficient distance from racks and other objects.

– To check the function of the automatic mast vertical positioning function, proceed as follows:

– Press the softkey.

The symbol appears in the display.

– Tilt back the lift mast until it reaches the end stop.

– Tilt the lift mast forwards.

The lift mast must stop in the vertical position.

The automatic mast vertical positioning can be used.

– If the lift mast does not stop in the vertical position, do not use the assistance system.

– In this case, contact your authorised service centre.

Calibrating the automatic mast vertical positioning

The automatic mast vertical positioning is calibrated using a wizard on the display-operating unit.

NOTE

The wizard requires access authorisation for the fleet manager. Access to the settings menu is only available if the truck is at a standstill and the parking brake is applied. If the parking brake is released prematurely, the settings menu will close.

– Set the load down, if necessary.

– Drive the truck into an area that is to be used for placing loads into stock and removing loads from stock.

Once the "automatic mast vertical positioning" assistance system has been calibrated, a pallet can be stored horizontally in a rack when the truck is standing on a HGV ramp, for example.

– Lift the fork carriage slightly.

– Apply the parking brake.

– Attach a tilt angle template with a spirit level to the outer lift mast. ▷

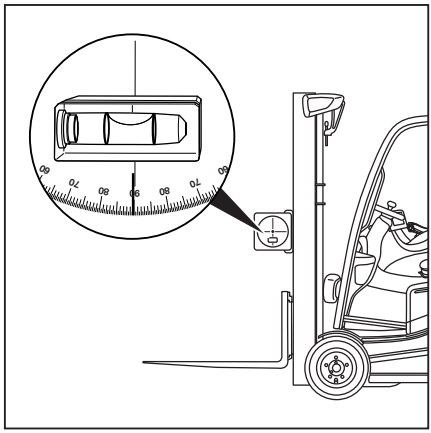

– Bring the lift mast to the vertical position according to the spirit level.

– Press the button.

– Press the Softkey.

– Activate the "Access authorisation for the fleet manager".

– Press the `Service` softkey. ▷

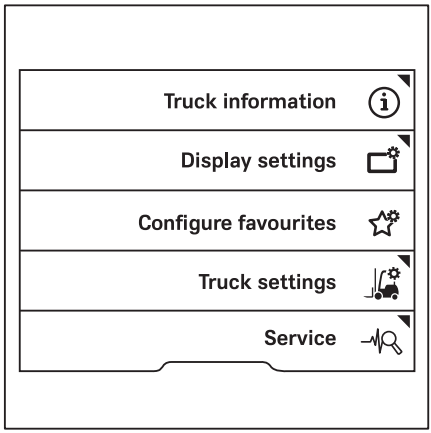

– Press the scroll keys △ ▽ until the `Calibration` menu appears. ▷

– Press the `Calibration` softkey.

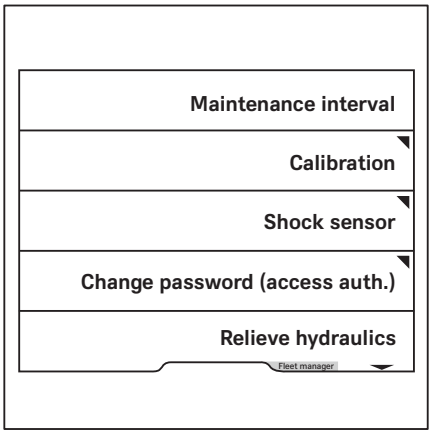

– Press the `Lift mast tilting` softkey. ▷

The wizard for calibrating the load measurement is started.

– Follow the instructions on the display.

– If the message `Calibration failed !` appears, press the ☑ softkey.

– Repeat the process.

After the calibration has been completed successfully, the message `Calibration successful` ✓ appears.

– Switch the truck off and on again.

The calibration is now complete.

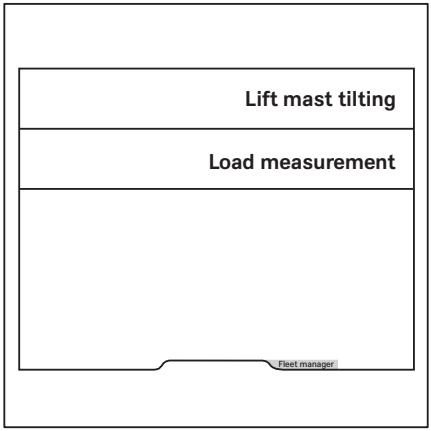

NOTE

If the message `A6701 Fault: Monitoring of assistance system` ⚠ *appears during the calibration, perform the calibration again.*

Load-dependant assistance systems

Overload detection (variant)

⚠ WARNING

Risk of accident as a result of exceeding the permissible load capacity!

This assistance system does not replace the driver's duty to observe the load capacity specified on the nameplate.

– Observe the load capacity specified on the nameplate.

This assistance system alerts the driver as soon as an excessive load is picked up. The message `Overload` ⚠ is shown on the display-operating unit.

The maximum load always refers to the sum of the load picked up plus any attachments present. The authorised service centre can configure the setting for the maximum load. However, the maximum load must not be higher than the nominal load.

The overload detection restricts the hydraulic functions as follows:

- If the rated capacity or the maximum load set by the authorised service centre is exceeded, the lifting speed is reduced.
- If the rated capacity or the set maximum load are exceeded by more than 10%, the "Lifting" function is disabled.

NOTE

Please note the following special considerations:

- *If the load pressure sensor fails, the maximum load (nominal load) is assumed. The function engages to the maximum extent.*
- *If the lifting stage switch fails, the truck control unit assumes the fork carriage is at the maximum lift height.*
- *In the case of overload, the "lifting" function is blocked from the factory. The authorised service centre can remove the "lifting" function block and restrict the function instead.*

Configuration by the fleet manager

– Activate the "Access authorisation for the fleet manager".

– Press the button.

– Press the softkey.

– Press the `Truck settings` softkey. ▷

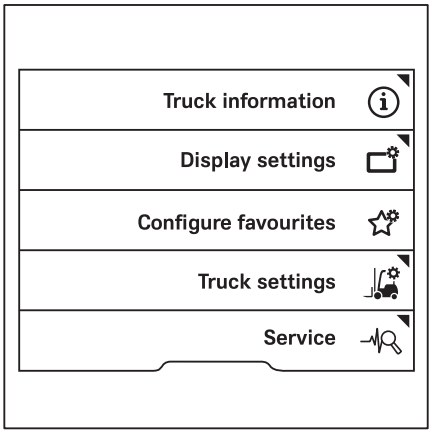

– Press the `Overload detection` soft-key. ▷

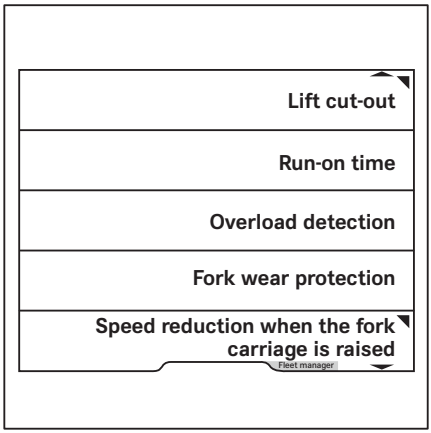

In this menu you can define the desired weight.

– Enter the weight using softkeys `0 to 9`.

NOTE

Only a lower value than the permissible load capacity of the truck can be entered as an overload.

– To `save`, press the button.

The menu closes.

▷

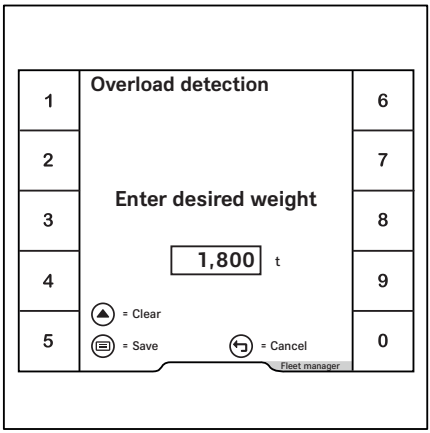

Dynamic Load Control 1 (variant)

WARNING

Risk of accident as a result of overloading!

Dynamic Load Control 1 is not a safety function and does not release the driver from the duty to observe the information specified in the load capacity diagram!

WARNING

Risk of accident due to the slow response of the lifting system!

If the lifting movements are configured to use low dynamics, the lifting system responds after a delay when the operating device is released, even in an emergency. The fork carriage does not stop immediately; instead, it takes approx. one second.

This behaviour may also occur when specific settings are configured for the Dynamic Load Control 1.

– Work with particular attention and care.

– Observe the "Dynamics of the hydraulic movements" section in the chapter entitled "Lifting".

Dynamic Load Control 1 improves the handling of the load. This function protects the truck and the load from abrupt movements.

Dynamic Load Control 1 regulates the lifting and tilting dynamics and the driving dynamics according to the following criteria:

- Lift height
- Load weight

Load movements which could lead to critical conditions are slowed down if necessary.

Dynamic Load Control 1 intervenes in the following operating situations:

- With a telescopic lift mast:
  The fork carriage is at least 2.1 m off the ground.
- With a triple lift mast or NiHo lift mast:
  The fork carriage is in the second lifting stage
- The load picked up exceeds 50% of the nominal load

The driving speed is reduced to 5 km/h at a lift height of 2.1 m and higher or in the second lifting stage.

NOTE

When the fork carriage has been lowered below the lift heights mentioned above, the driver can deactivate the speed restriction again. Release the accelerator pedal for a short period to do this.

If a sensor belonging to Dynamic Load Control 1 fails, the level of intervention from the function is increased to a maximum.

Dynamic Load Control 2 (variant)

WARNING

Risk of accident as a result of overloading!

"Dynamic Load Control 2" is not a safety function and does not release the driver from the duty to observe the information specified in the load capacity diagram!

⚠ WARNING

Risk of accident due to the slow response of the lifting system!

If the lifting movements are configured to use low dynamics, the lifting system responds after a delay when the operating device is released, even in an emergency. The fork carriage does not stop immediately; instead, it takes approx. one second.

This behaviour may also occur when specific settings are configured for the Dynamic Load Control 2.

– Work with particular attention and care.
– Observe the "Dynamics of the hydraulic movements" section in the chapter entitled "Lifting".

"Dynamic Load Control 2" improves the handling of the load. This function protects the truck and the load from abrupt movements.

Dynamic Load Control 2 regulates the lifting and tilting dynamics and the driving dynamics according to the following criteria:

- Lift height
- Load weight
- Load centre of gravity

Dynamic Load Control 2 intervenes in the following operating situations:

- With a telescopic lift mast:
  The fork carriage is at least 2.1 m off the ground.
- With a triple lift mast or NiHo lift mast:
  The fork carriage is in the second lifting stage
- The truck centre of gravity has shifted to an unfavourable position due to the position of the load

Dynamic Load Control 2 calculates the interaction between these three criteria and intervenes in the calculated result.

Load movements which could lead to critical conditions are slowed down if necessary.

The driving speed is reduced to 5 km/h at a lift height of 2.1 m and higher or in the second lifting stage.

NOTE

When the fork carriage has been lowered below the lift heights mentioned above, the driver can deactivate the speed restriction again. Release the accelerator pedal for a short period to do this.

The bar display on the display of the display-operating unit is part of the load information. It is part of the Dynamic Load Control 2.

The number and colour of the bars indicates to what extent the determined load weight and load centre of gravity affect the stability of the truck.

The bar display is divided into three sections and ten segments.

A **Grey area**

The dynamics of the lifting movements and tilting movements are not noticeably reduced.

B **Yellow area**

If a load that is close to the nominal load is picked up, the display moves into the yellow area.

The dynamics of the lifting movements and tilting movements are noticeably reduced.

– Handle the load with the appropriate level of care.

C **Red area**

When the combination of load weight and load centre of gravity exceeds the specified value, the display moves into the red area.

The dynamics of the lifting movements and tilting movements are significantly reduced.

– In this case, set down the load or tilt backwards.

▷

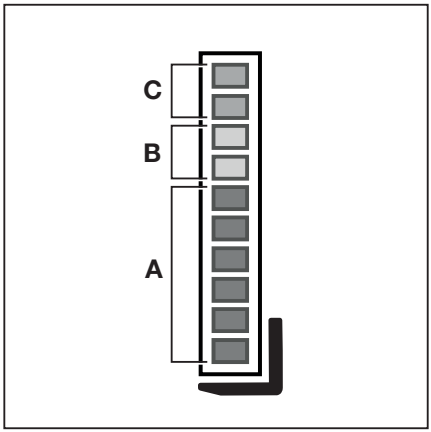

A Grey
B Yellow
C Red

If a sensor belonging to Dynamic Load Control 2 fails, the level of intervention from the function is increased to a maximum. A cross appears instead of the bar.

– If this display appears permanently, contact the authorised service centre.

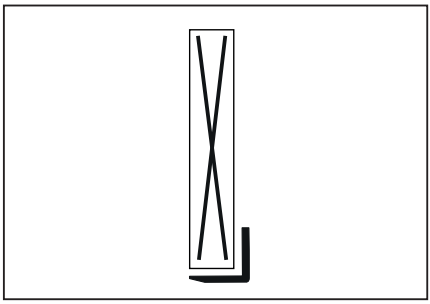

Load measurement (variant)

Knowing the weight of the load to be transported gives the driver greater security. If the truck is equipped with the "load measurement" assistance system, the weight of the lifted load is measured and displayed in the display-operating unit (1). The measuring accuracy is 5% of the rated capacity.

– Observe the following safety information.

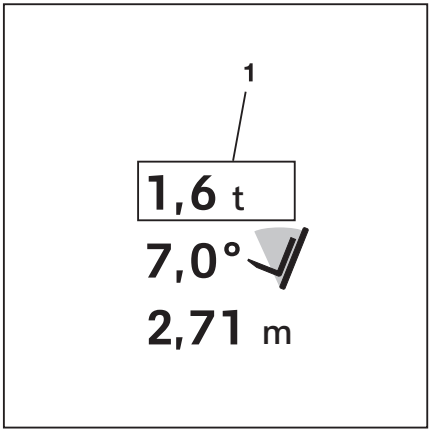

DANGER

Risk of accident from a falling load!

The load may fall if the load centre of gravity has not been taken into account or the load has not been picked up securely.

– Pick up the load securely; see the chapter entitled "Picking up loads".

WARNING

Risk of accident as a result of exceeding the residual load capacity.

If the weight determined by a load measurement exceeds the permissible residual load capacity of the truck, the truck cannot be operated safely.

– Set down and reduce the load immediately.

– If necessary, use another truck with sufficient load-bearing capacity.

NOTE

The load measurement must be calibrated in order to ensure accuracy at all times. The "access authorisation for the fleet manager" is required for the calibration. This access is required:

- *After changing the fork arms,*
- *After fitting or changing attachments*
- *If the displayed values are obviously incorrect*

If `-.-- t` is displayed permanently, this means that the function is calibrated incorrectly (load < 0 kg).

– See the section entitled "Calibrating the load measurement".

NOTE

When you change fork arms or attachments, the load measurement must be zeroed.

– See the section entitled "Zeroing the assistance systems".

Calibrating the load measurement

If the truck is equipped with the "load measurement" assistance system, then this assistance system must be calibrated.

The load measurement is calibrated using a wizard on the display-operating unit.

NOTE

The calibration procedure requires access authorisation for the fleet manager. Access to the settings menu is only available if the truck is at a standstill and the parking brake is applied. If the parking brake is released prematurely, the settings menu will close.

– Set the load down, if necessary.

– Drive the truck onto an even surface.

– Apply the parking brake.

– Press the ☰ button.

– Press the ⚙ Softkey.

– Activate the "Access authorisation for the fleet manager".
– Press the `Service` softkey. ▷

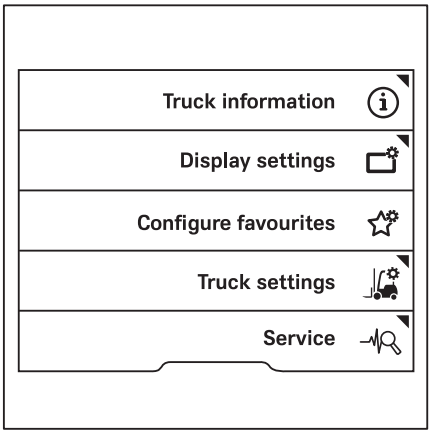

– Press the scroll keys △ ▽ until the `Calibration` menu appears. ▷

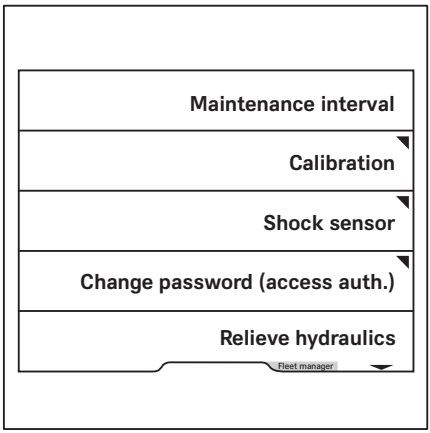

– Press the `Load measurement` softkey. ▷

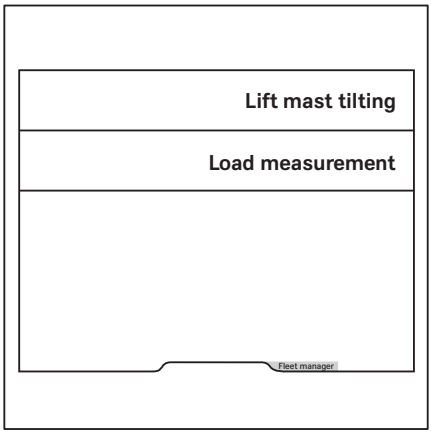

The wizard for calibrating the load measurement is started.

– Follow the instructions on the display.

– If the message `Calibration failed !` appears, press the ☑ softkey.

– Repeat the process.

After the calibration has been completed successfully, the message `Successful calibration` ✓ appears.

– Switch the truck off and on again.

The calibration is now complete.

NOTE

If the message `A6701 Fault: Monitoring of assistance system` ⚠ *appears during the calibration, perform the calibration again.*

Precision load measurement (variant) ▷

This assistance system is available only if the truck is equipped with the "load measurement" variant.

The "Precision load measurement" variant allows the weight of the load being picked up to be measured and displayed on the display-operating unit accurate to within 3% of the rated capacity of the truck.

NOTE

If the load is to be measured exclusive of the load pick-up device, run the tare function. See the next section.

– Pick up the load safely.

– Press the ▤ button.

The first menu level appears.

– Press the ▤ softkey.

– Press the softkey (1). ▷

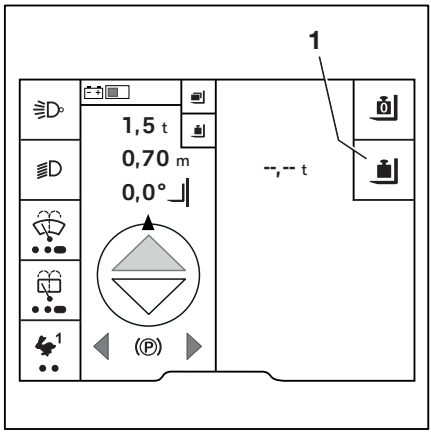

The `Lower fork slightly` prompt is displayed. ▷

– Lower the fork carriage.

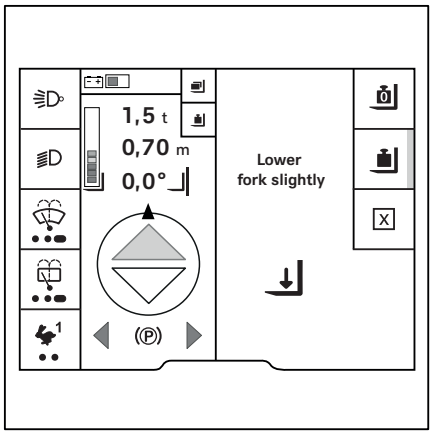

NOTE

Slowly lowering the fork carriage increases the measurement accuracy in trucks with multi-lever operation.

The value is calculated. The `Calc. ongoing` message appears.

If the calculation was successful, the measured weight of the load (1) is displayed. ▷

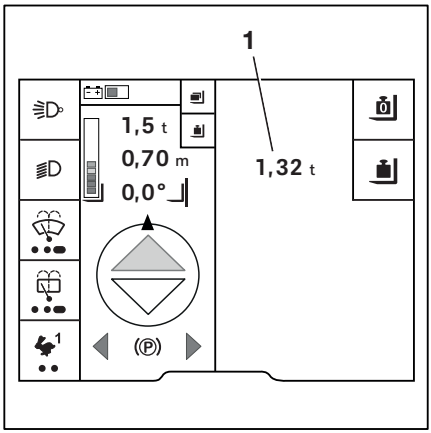

NOTE

If the tare function was not active, the full weight of the load being picked up is displayed.

The measured weight remains displayed until:

- The load has been measured again
- The sensor system detects a change in the weight
  In this case, `-.--  t` is displayed as the weight.

Tare function (variant) ▷

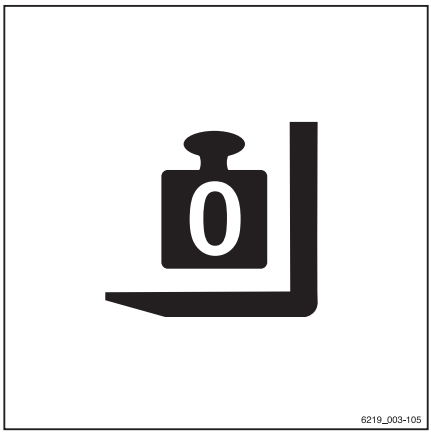

The tare function is a sub-function of the precision load measurement function. If the precision load measurement function should not factor in the weight of a load container, the tare function must be run. It is then possible to determine the net weight of the raised load.

NOTE

During the following process, the fork carriage must be lowered slightly. When doing so, the fork must not touch the ground, as otherwise the result will be inaccurate.

– Set the lift mast to vertical.

– Pick up the empty load container, such as a crate.

– Raise the fork to a height of between 300 mm and 800 mm.

– Press the ☰ button.

The first menu level appears.

– Press the softkey.

– Press the softkey.

– Press the softkey (1).

The activation bar next to the symbol lights up.

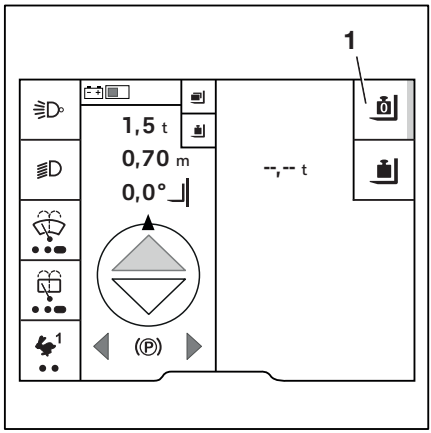

The `Lower fork slightly` prompt is displayed.

– Lower the fork carriage.

The value is calculated. The message `Zeroing ongoing` is displayed.

If the tare function was run successfully, a weight of 0.00 t is displayed. The activation bar next to the symbol remains illuminated.

– If the tare function was not run successfully, follow the prompts on the display and repeat the process.

When a load is picked up, `-.-- t` is displayed.

The "Precision load measurement" can be performed.

– To clear the tare weight, press the softkey again.

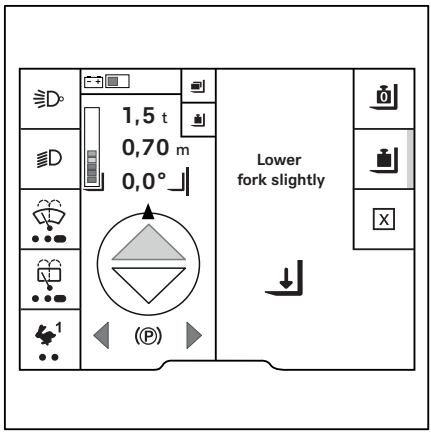

⚠ WARNING

Risk of accident due to incorrect load specification.

If the requirements for the precision load measurement function change, the tare function must be run again, for example if a precision load measurement needs to be performed without a crate. Otherwise, the new precision load measurement will continue to deduct the weight of the crate.

– Run the tare function again without a load or a crate.

Total load (variant) ▷

Use the "total load" variant to calculate the total weight of multiple loads. The "total load" is an additional function of the "load measurement". It records the individual loads and stores up to three total loads.

This allows, for example, three different containers to be laden and their loading weight to be determined. This function is helpful if, for instance, a container has a limited payload and you want to know when the permissible load weight has been reached.

This function is useful for comparing the loads indicated on delivery documents to the actual loads, for example.

The procedure for adding up the total load is as follows:

1 Pick up the load and call up the load menu,
2 Measure the load,
3 Add/subtract the load.

⚠ WARNING

Risk to stability.

If the weight determined by a load measurement exceeds the permissible residual load capacity of the truck, the truck cannot be operated safely.

– Do not lift the load higher than 800 mm.
– Set down and reduce the load immediately.
– If necessary, use another truck with sufficient load-bearing capacity.

NOTE

Lift the load to a height of between 300 mm and 800 mm, since the load must subsequently be lowered slightly for the weighing process. If the weighing process establishes that the load is too heavy, the load must not be lifted higher than 800 mm. The fork arms must not touch the ground.

Picking up the load and calling up the load menu

– Pick up the load safely.
– Press the ▤ button.

The first menu level appears.

– Press the softkey.

– Press the softkey.

A menu appears with three storage locations for the total load. ▷

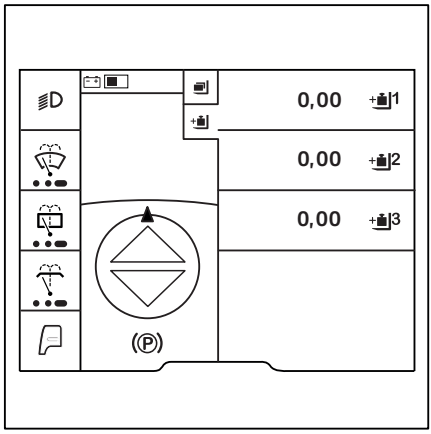

The total load is explained here using 1.

– Press the 1 softkey.

The menu for storage location 1 appears. ▷

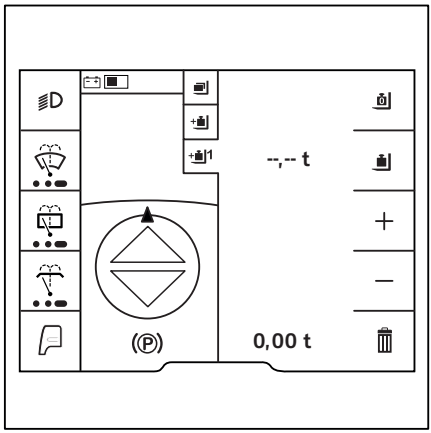

This menu provides the following functions:

- Tare
- Precision load measurement
- + Add load
- – Subtract load
- Delete total load

Measure load

– Press the softkey. Measure the load.

The message with the prompt `Lower fork slightly` appears.

– Lower the fork carriage.

The value is calculated. The `Calc. ongoing` message appears.

If the calculation was successful, the load is displayed.

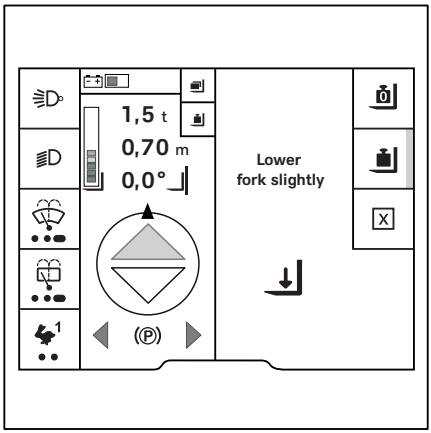

Adding a load

– Pick up the load to be added.

– Measure the load as described previously.

– Press the + softkey.

The load is saved automatically.

Subtracting a load

– Pick up the load to be subtracted.

– Measure the load as described previously.

– To subtract the current load, press the
  – softkey.

The current load is subtracted from the sum.

The load is saved automatically.

NOTE

If, for instance, this load was added to the wrong total load, it is also possible to perform a subtraction with the previously measured and added load.

Delete total load

– To delete the total load, press the 🗑 softkey.

The `Clear total load?` message ? is displayed.

– To clear, press the ☑ softkey.

– To cancel, press the ☒ softkey.

The display changes back to the menu with the three storage locations.

Zeroing the assistance systems

Zeroing process

The following assistance systems sometimes require zeroing.

- **Load measurement**
  When changing fork arms or attachments
- **Lift height display**
  When replacing worn tyres
  For increasingly worn tyres / for new tyres
- **Mast tilt angle display**
  ○ When replacing a worn pair of tyres, if the front and rear tyres are worn to different levels.
  ○ If the front and rear tyres show different levels of wear.
- **Electrical fork wear protection**
  When changing fork arms

NOTE

The zeroing for the "load measurement" assistance system is shown here as an example.

– Activate the "Access authorisation for the fleet manager".

– Press the button.

– Press the softkey.

– Press the `Truck settings` softkey. ▷

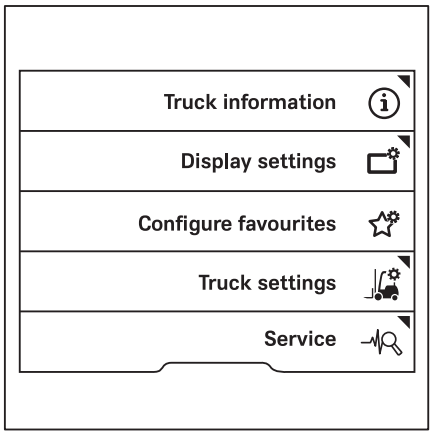

Zeroing the assistance systems

– Press the `Zeroing` softkey. ▷

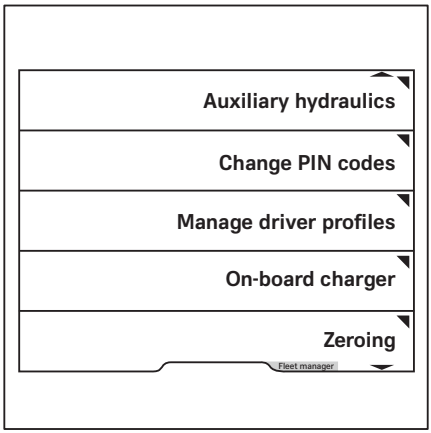

– Press the softkey for the assistance function for which the zeroing is to be performed, e.g. `Load weight`. ▷

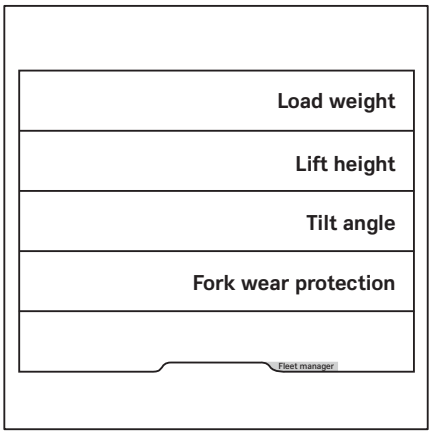

NOTE

The processes for zeroing the other assistance systems are almost identical.

The instructions are shown in the display. ▷

Here: `Lower forks`

After the instructions have been followed, the messages `Zeroing successful` or `Zeroing failed` are displayed.

– If zeroing failed, try again.

– If zeroing fails repeatedly, contact your authorised service centre.

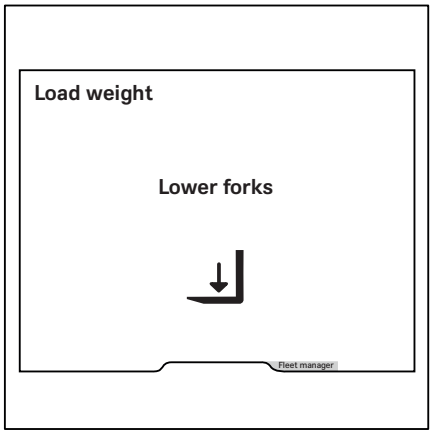

Depressurising the hydraulic system

Need to depressurise the hydraulic system

To enable additional hydraulic functions other than the basic functions to be used, the truck has plug connectors (1) on the lift mast.

Clamping and non-clamping attachments can be connected to these plug connectors.

- Non-clamping attachments are connected to the third hydraulic circuit via the plug connectors (1) on the fork carriage and are controlled via the "5th hydraulic function" (variant).
- Clamping attachments are not controlled via the "5th hydraulic function".

Attachments must only be installed by competent persons. The specifications provided by the manufacturer and supplier of the attachments must be observed during installation of the attachments.

Before changing attachments, the hydraulic system must be depressurised. This is done using a wizard on the display-operating unit.

If the truck has a "5th hydraulic function", their hydraulic circuits must also be depressurised.

– Observe the following sections to depressurise the hydraulic system.

- "Wizard for depressurising the hydraulic system"
- "Depressurising the hydraulic system using ..." (see the respective operating device!)
- "Depressurising the hydraulic system using ... and the 5th function" (see the respective operating device!)
- "Special feature for clamping attachments"
- "Completing the depressurisation"

▷

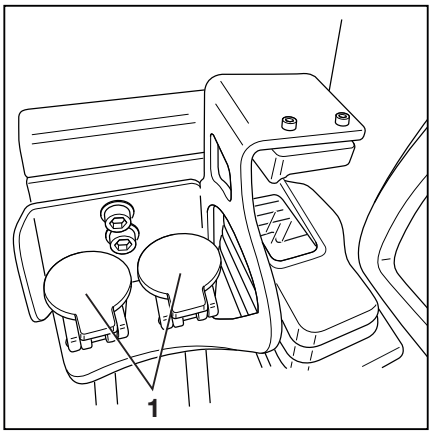

Plug connectors on the lift mast

Wizard for depressurising the hydraulic system

The hydraulics are depressurised using a wizard on the display-operating unit.

If this function is required for daily operation, contact your authorised service centre. The

authorised service centre can enable the function for the driver.

NOTE

The wizard requires access authorisation for the fleet manager. Access to the settings menu is only available if the truck is at a standstill and the parking brake is applied. If the parking brake is released prematurely, the settings menu will close.

– Set the load down, if necessary.

– Apply the parking brake.

Starting the wizard

– Press the button.

– Press the softkey.

– Activate the "Access authorisation for the fleet manager".

– Press the `Service` softkey. ▷

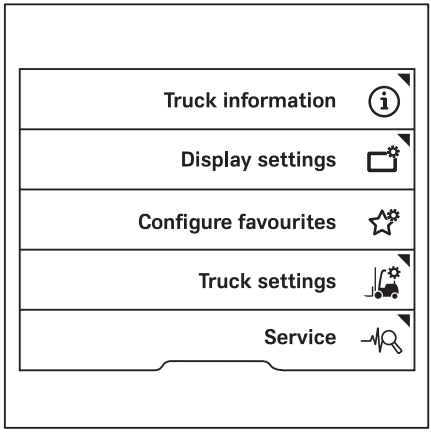

Depressurising the hydraulic system

– Press the scroll keys △ ▽ until the `Relieve hydraulics` menu appears.

– Push the `Relieve hydraulics` softkey.

▷

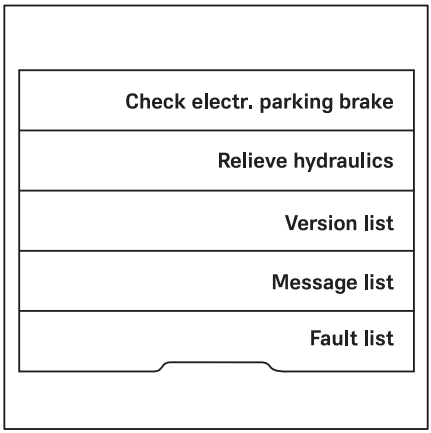

The following message appears: `Caution, the lift mast may move! !`

– To confirm, press the ☑ softkey.

Press the ☒ softkey to exit the wizard.

▷

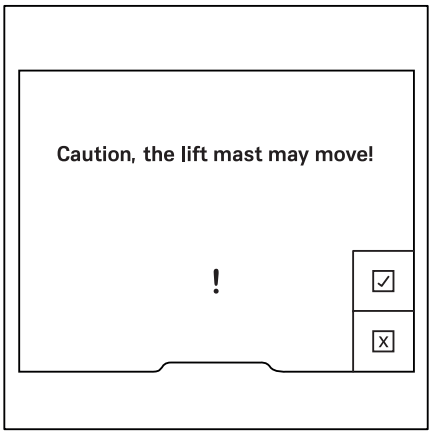

The following message appears: `Disengage all hydraulic axles, then switch off the truck !`

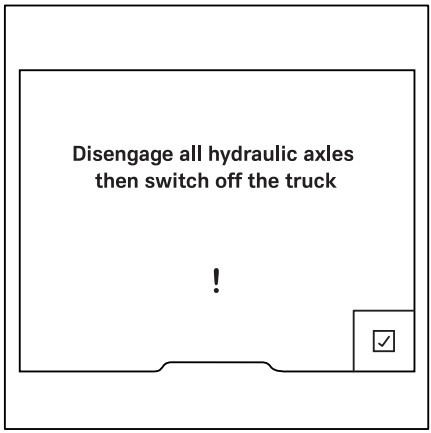

– Depressurise the hydraulics, see the relevant section for the respective operating devices.

⚠ WARNING

The movements of the load lift system present a risk of crushing!

During the depressurisation process, the fork carriage or the lift mast can move slightly.

– Do not reach into or stand below the components of the load lift system.

NOTE

Do not move the steering wheel while depressurising the hydraulics. Otherwise the hydraulic system will build up pressure again. As soon as pressure has built up in the hydraulic system again, the function for relieving the hydraulics becomes inactive.

Depressurising the hydraulic system using multi-lever operation

– Start the "wizard for depressurising the hydraulic system".

Depressurising the hydraulic circuits for the basic functions

The basic functions include the first four hydraulic functions. The basic functions are controlled via the first two hydraulic circuits.

The basic functions are:

- Lift the fork carriage
- Lower the fork carriage
- Tilt the lift mast forwards
- Tilt the lift mast backwards

– Push the operating levers (1, 2) once in the direction of the arrow until the end position is reached.

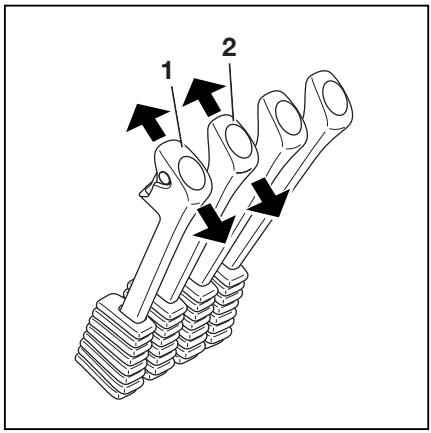

The hydraulic circuits of the basic functions are now depressurised.

Depressurising the hydraulic circuits for the additional functions ▷

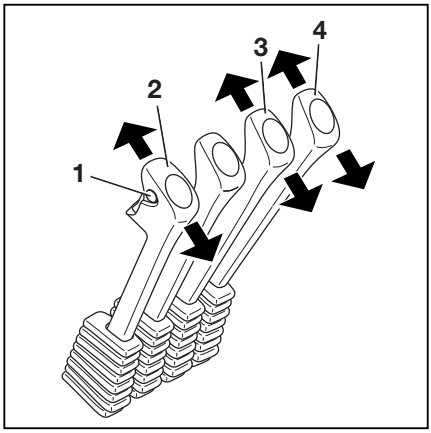

The additional features include features such as the sideshift and fork adjustment. Clamping attachments are also connected to these hydraulic circuits. These functions are controlled via hydraulic circuits three and four.

– Actuate the operating levers (3, 4) for controlling the additional functions once in the direction of the arrow until the end positions are reached.

The hydraulic circuits of the additional functions are now depressurised.

Completing the depressurisation

– To complete the depressurisation, observe the section entitled "Exiting the wizard".

Depressurising the hydraulic system using a double mini-lever

– Start the "wizard for depressurising the hydraulic system".

Depressurising the hydraulic circuits for the basic functions ▷

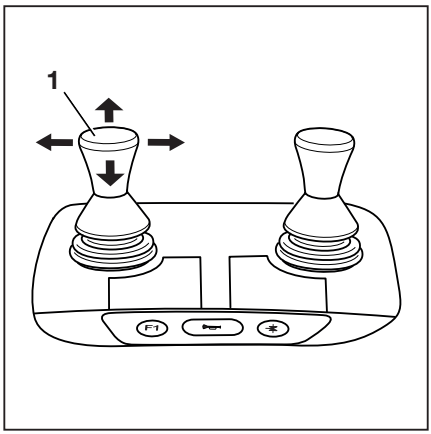

The basic functions include the first four hydraulic functions. The basic functions are controlled via the first two hydraulic circuits.

The basic functions are:

- Lifting the fork carriage
- Lowering the fork carriage
- Tilting the lift mast forwards
- Tilting the lift mast backwards

– Push the cross lever (1) once in the direction of the arrow until the end position is reached.

The hydraulic circuits of the basic functions are now depressurised.

Depressurising the hydraulic circuits for the additional functions ▷

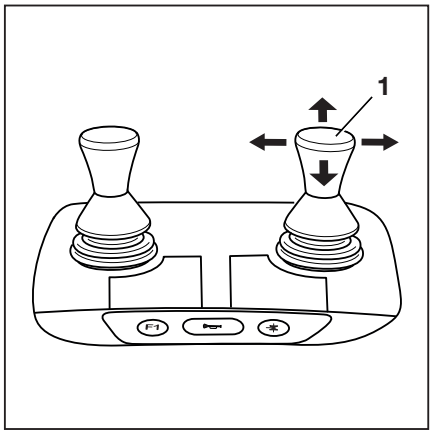

The additional features include features such as the sideshift and fork adjustment. Clamping attachments are also connected to these hydraulic circuits. These functions are controlled via hydraulic circuits three and four.

– Actuate the cross lever (1) for controlling the additional functions once in the direction of the arrow until the end position is reached.

The hydraulic circuits of the additional functions are now depressurised.

Completing the depressurisation

– To complete the depressurisation, observe the section entitled "Exiting the wizard".

Depressurising the hydraulic system using the double mini-lever and the 5th function

If the truck is equipped with the double mini-lever, the attachments can also be controlled via the "5th hydraulic function".

– Start the "wizard for depressurising the hydraulic system".

Depressurising the hydraulic circuits for the "5th hydraulic function" ▷

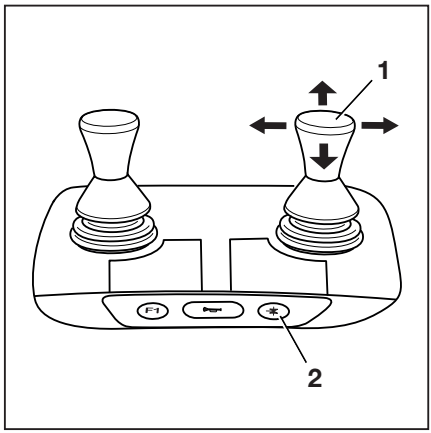

If the truck has a "5th hydraulic function", the hydraulic circuit of this function must also be depressurised. The procedure is similar to the depressurisation of the hydraulic circuits for the basic functions and the additional functions. In addition, the hydraulic circuit is depressurised in the same way as the attachments are operated. The hydraulic circuit for the "5th hydraulic function" is actuated using the function key for the "5th function" (2).

– Actuate the function key for the "5th function" (2).

The LED for the "5th function" ✳ lights up.

– Push the cross lever (1) once in the direction of the arrow until the end position is reached.

The hydraulic circuit of the 5th hydraulic function is depressurised. The plug connectors on the lift mast are depressurised.

– Actuate the function key for the "5th function" (2).

The LED for the "5th function" goes out.

Completing the depressurisation

– To complete the depressurisation, observe the section entitled "Exiting the wizard".

Depressurising the hydraulic system using a triple mini-lever

– Start the "wizard for depressurising the hydraulic system".

Depressurising the hydraulic circuits for the basic functions ▷

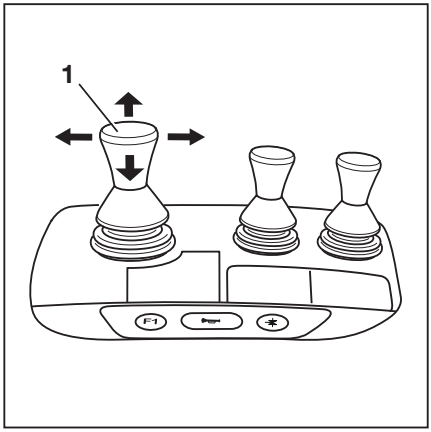

The basic functions include the first four hydraulic functions. The basic functions are controlled via the first two hydraulic circuits.

The basic functions are:

- Lifting the fork carriage
- Lowering the fork carriage
- Tilting the lift mast forwards
- Tilting the lift mast backwards

– Push the cross lever (1) once in the direction of the arrow until the end position is reached.

The hydraulic circuits of the basic functions are now depressurised.

Depressurising the hydraulic circuits for the additional functions ▷

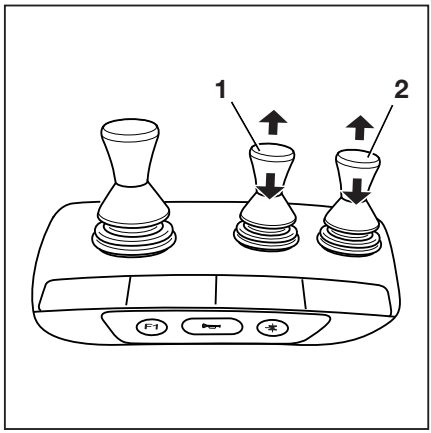

The additional features include features such as the sideshift and fork adjustment. Clamping attachments are also connected to these hydraulic circuits. These functions are controlled via hydraulic circuits three and four.

– Actuate the operating levers (1, 2) for controlling the additional functions once in the direction of the arrow until the end positions are reached.

The hydraulic circuits of the additional functions are now depressurised.

Completing the depressurisation

– To complete the depressurisation, observe the section entitled "Exiting the wizard".

Depressurising the hydraulic system using the triple mini-lever and the 5th function

If the truck is equipped with the triple mini-lever, the attachments can also be controlled via the "5th hydraulic function".

– Start the "wizard for depressurising the hydraulic system".

Depressurising the hydraulic circuits for the "5th hydraulic function" ▷

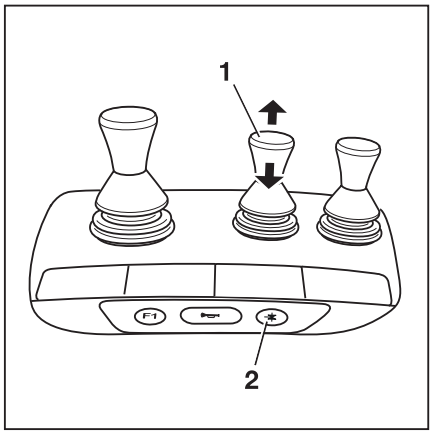

If the truck has a "5th hydraulic function", the hydraulic circuit of this function must also be depressurised. The procedure is similar to the depressurisation of the hydraulic circuits for the basic functions and the additional functions. In addition, the hydraulic circuit is depressurised in the same way as the attachments are operated. The hydraulic circuit for the "5th hydraulic function" is actuated using the function key for the "5th function" (2).

– Actuate the function key for the "5th function" (2).

The LED for the "5th function" ✱ lights up.

– Push the operating lever (1) once in the direction of the arrow until the end position is reached.

The hydraulic circuit of the 5th hydraulic function is depressurised. The plug connectors on the lift mast are depressurised.

– Actuate the function key for the "5th function" (2).

The LED for the "5th function" goes out.

Completing the depressurisation

– To complete the depressurisation, observe the section entitled "Exiting the wizard".

Depressurising the hydraulic system using a quadruple mini-lever

– Start the "wizard for depressurising the hydraulic system".

Depressurising the hydraulic circuits for the basic functions ▷

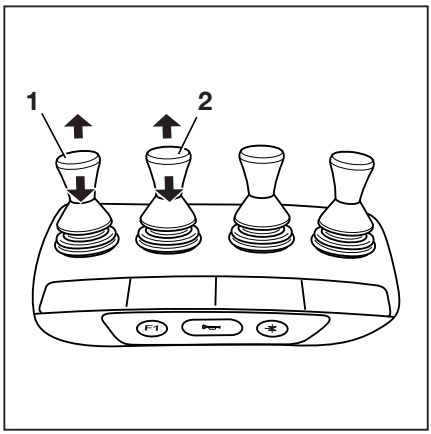

The basic functions include the first four hydraulic functions. The basic functions are controlled via the first two hydraulic circuits.

The basic functions are:

- Lifting the fork carriage
- Lowering the fork carriage
- Tilting the lift mast forwards
- Tilting the lift mast backwards

– Push the operating levers (1, 2) once in the direction of the arrow until the end position is reached.

The hydraulic circuits of the basic functions are now depressurised.

Depressurising the hydraulic circuits for the additional functions ▷

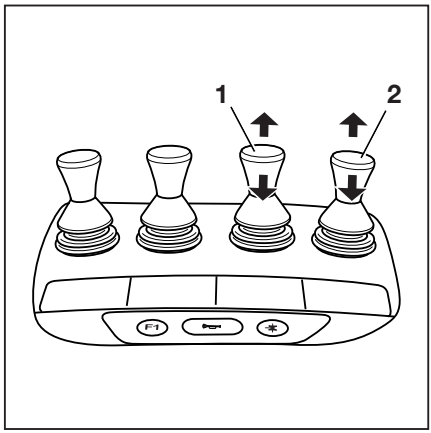

The additional features include features such as the sideshift and fork adjustment. Clamping attachments are also connected to these hydraulic circuits. These functions are controlled via hydraulic circuits three and four.

– Actuate the operating levels (1, 2) for controlling the additional functions once in the direction of the arrow until the end positions are reached.

The hydraulic circuits of the additional functions are now depressurised.

Completing the depressurisation

– To complete the depressurisation, observe the section entitled "Exiting the wizard".

Depressurising the hydraulic system using the quadruple mini-lever and the 5th function

If the truck is equipped with the quadruple mini-lever, the attachments can also be controlled via the "5th hydraulic function".

– Start the "wizard for depressurising the hydraulic system".

Depressurising the hydraulic circuits for the "5th hydraulic function" ▷

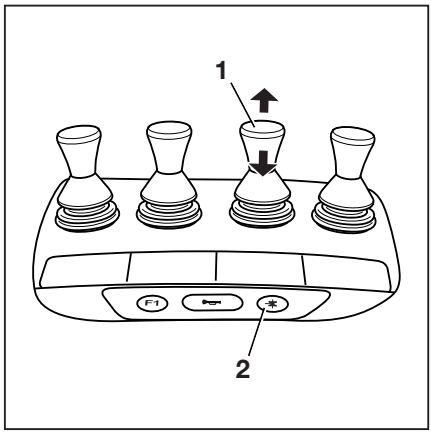

If the truck has a "5th hydraulic function", the hydraulic circuit of this function must also be depressurised. The procedure is similar to the depressurisation of the hydraulic circuits for the basic functions and the additional functions. In addition, the hydraulic circuit is depressurised in the same way as the attachments are operated. The hydraulic circuit for the "5th hydraulic function" is actuated using the function key for the "5th function" (2).

– Actuate the function key for the "5th function" (2).

The LED for the "5th function" ✳ lights up.

– Push the operating lever (1) once in the direction of the arrow until the end position is reached.

The hydraulic circuit of the 5th hydraulic function is depressurised. The plug connectors on the lift mast are depressurised.

– Actuate the function key for the "5th function" (2).

The LED for the "5th function" goes out.

Completing the depressurisation

– To complete the depressurisation, observe the section entitled "Exiting the wizard".

Depressurising the hydraulic system using the Fingertip

– Start the "wizard for depressurising the hydraulic system".

Depressurising the hydraulic circuits for the basic functions ▷

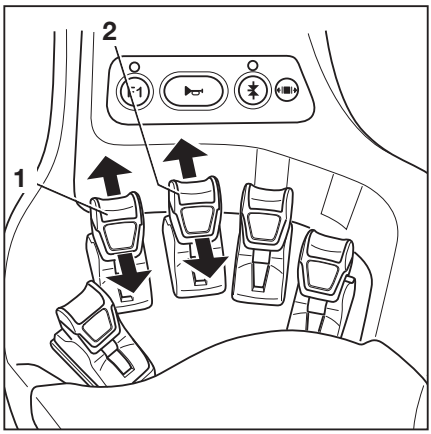

The basic functions include the first four hydraulic functions. The basic functions are controlled via the first two hydraulic circuits.

The basic functions are:

- Lifting the fork carriage
- Lowering the fork carriage
- Tilting the lift mast forwards
- Tilting the lift mast backwards

– Push the operating levers (1, 2) once in the direction of the arrow until the end position is reached.

The hydraulic circuits of the basic functions are now depressurised.

Depressurising the hydraulic circuits for the additional functions ▷

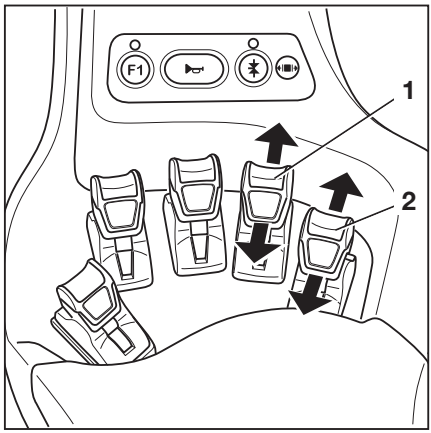

The additional features include features such as the sideshift and fork adjustment. Clamping attachments are also connected to these hydraulic circuits. These functions are controlled via hydraulic circuits three and four.

– Actuate the operating levels (1, 2) for controlling the additional functions once in the direction of the arrow until the end positions are reached.

The hydraulic circuits of the additional functions are now depressurised.

Completing the depressurisation

– To complete the depressurisation, observe the section entitled "Exiting the wizard".

Depressurising the hydraulic system using the Fingertip and the 5th function

If the truck is equipped with the Fingertip, the attachments can also be controlled via the "5th hydraulic function".

– Start the "wizard for depressurising the hydraulic system".

Depressurising the hydraulic circuits for the "5th hydraulic function" ▷

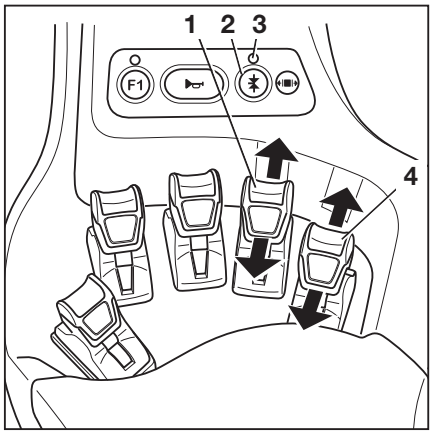

If the truck has a "5th hydraulic function", the hydraulic circuit of this function must also be depressurised. The procedure is similar to the depressurisation of the hydraulic circuits for the basic functions and the additional functions. In addition, the hydraulic circuit is depressurised in the same way as the attachments are operated. The hydraulic circuit for the "5th hydraulic function" is actuated using the function key for the "5th function" (2). The operating levers (1) or (4) can be assigned the 5th function. Observe the relevant pictogram for the 5th function.

– Actuate the function key for the "5th function" (2).

The LED for the "5th function" (3) lights up.

– Push the operating levers (1) or (4) once in the direction of the arrow until the end position is reached.

The hydraulic circuit of the 5th hydraulic function is depressurised. The plug connectors on the lift mast are depressurised.

– Actuate the function key for the "5th function" (2).

The LED for the "5th function" (3) goes out.

Completing the depressurisation

– To complete the depressurisation, observe the section entitled "Exiting the wizard".

Depressurising the hydraulic system using the Joystick 4Plus

– Start the "wizard for depressurising the hydraulic system".

Depressurising the hydraulic circuits for the basic functions ▷

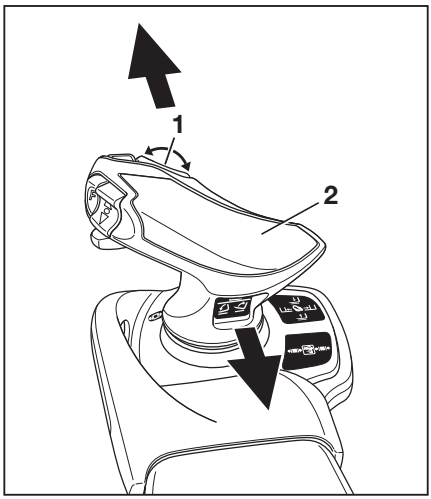

The basic functions include the first four hydraulic functions. The basic functions are controlled via the first two hydraulic circuits.

The basic functions are:

- Lifting the fork carriage
- Lowering the fork carriage
- Tilting the lift mast forwards
- Tilting the lift mast backwards

– Push the Joystick 4Plus (2) once in the direction of the arrow until the end position is reached.

– Push the horizontal rocker button (1) once in the direction of the arrow.

The hydraulic circuits of the basic functions are now depressurised.

Depressurising the hydraulic circuits for the additional functions ▷

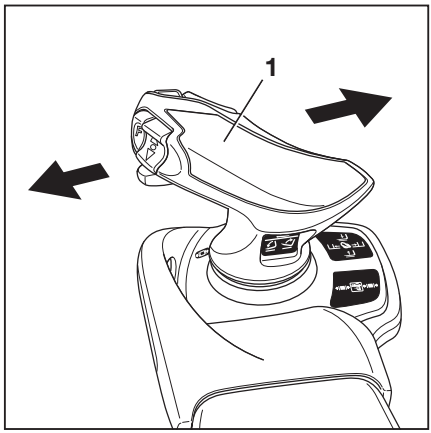

The additional features include features such as the sideshift and fork adjustment. Clamping attachments are also connected to these hydraulic circuits. These functions are controlled via hydraulic circuits three and four.

Push the Joystick 4Plus (1) once in the direction of the arrow until the end position is reached.

The hydraulic circuits of the additional functions are now depressurised.

Completing the depressurisation

– To complete the depressurisation, observe the section entitled "Exiting the wizard".

Depressurising the hydraulic system using the Joystick 4Plus and the 5th function

If the truck is equipped with the Joystick 4Plus, the attachments can also be controlled via the "5th hydraulic function".

– Start the "wizard for depressurising the hydraulic system".

Depressurising the hydraulic circuits for the "5th hydraulic function" ▷

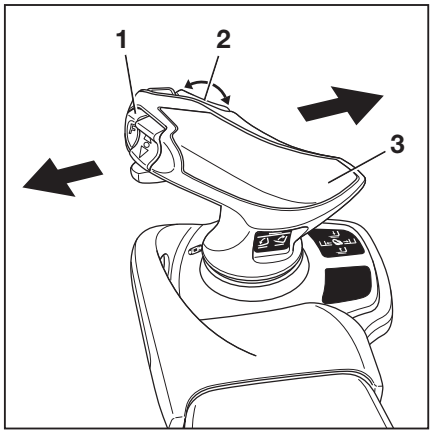

If the truck has a "5th hydraulic function", the hydraulic circuit of this function must also be depressurised. The procedure is similar to the depressurisation of the hydraulic circuits for the basic functions and the additional functions. In addition, the hydraulic circuit is depressurised in the same way as the attachments are operated. The hydraulic circuit for the "5th hydraulic function" is actuated using the shift key "F" (1). The Joystick 4Plus (3) or the horizontal rocker button (2) can be assigned the 5th function. Observe the relevant pictogram for the 5th function.

– Press and hold shift key "F" (1).

– Push the Joystick 4Plus (3) once in the direction of the arrow until the end position is reached.

Push the horizontal rocker button (2) once in the direction of the arrow.

The hydraulic circuit of the 5th hydraulic function is depressurised. The plug connectors on the lift mast are depressurised.

– Release shift key "F" (1).

Completing the depressurisation

– To complete the depressurisation, observe the section entitled "Exiting the wizard".

Special feature for clamping attachments

If a clamping attachment is fitted, please observe the following:

- Depressurising the hydraulic circuit for clamping attachments is performed in the same way as opening and closing the clamp.
- Loosen the clamp locking mechanism; see the relevant sections related to the clamp locking mechanism.
- Push the operating device once in the "Open" direction.
- Push the operating device once in the "Close" direction.

– Observe the section entitled "Clamp locking mechanism (variant)" in the chapter entitled "Attachments".

Exiting the wizard

– After the hydraulics have been depressurised, press the softkey ☑ to confirm.

The wizard for depressurising the hydraulics is switched off. The truck is ready for operation.

Attachments

Fitting attachments

If the truck is equipped with an integrated attachment (variant) at the factory, the specifications in the STILL operating instructions for integrated attachments must be observed.

If attachments are fitted at the place of use, the specifications in the operating instructions from the attachment manufacturer must be observed.

If an attachment is not delivered together with the truck, the specifications from the manufacturer and the operating instructions from the attachment manufacturer must be observed.

Before initial commissioning, the function of the attachment and the visibility from the driver's position with and without a load must be checked by a competent person. If the visibility is deemed insufficient, visual aids must be used, such as mirrors, a camera, a monitor system etc.

– Observe the following warning notices.

⚠ DANGER

Risk of fatal injury from falling load!

If attachments that hold the load by clamping it or exerting pressure on it do not have a second method of operating the function (lock), the load can work loose and fall off.

– Ensure that the second method of operating the function (lock) is available.

– When retrofitting such attachments, a second method of operating the function (lock) must also be retrofitted.

⚠ DANGER

Risk of fatal injury from falling load!

When installing a clamp with an integrated sideshift function, ensure that the clamp does not open when the sideshift is actuated.

– Notify your authorised service centre before installation.

– Never grab or climb on moving parts of the truck.

⚠ WARNING

Risk of accident due to incorrect labelling!

The use of attachments can cause accidents if the labelling is incorrect or missing.

If the truck is not fitted with an attachment-specific residual load capacity rating plate, and the operating devices are not marked with the relevant pictograms, the truck must not be used.

- Use only CE-certified attachments that include operating instructions and the required labels.
- In the United Kingdom, the attachments must also be UKCA certified and have the required labelling.
- Arrange for an attachment-specific residual load capacity rating plate to be fitted to the truck.
- Arrange for the operating devices to be re-labelled.
- Arrange for the authorised service centre to adjust the hydraulic system to the requirements of the attachment (e.g. adjust the pump motor speed).

⚠ WARNING

Risk of accident if steering is stopped!

Some hydraulic oil may be lost each time attachments are changed.

If attachments are changed frequently, the hydraulic oil level may be too low.

When the lift mast is extended, this low hydraulic oil level can cause the steering to cut out.

- If attachments are changed frequently, check the hydraulic oil level regularly and if necessary fill up with hydraulic oil.

NOTE

If the required labelling is not provided with the attachment, contact the authorised service centre promptly.

Alternating operation using an electrical switch valve

If non-integrated attachments for alternating operation are used in conjunction with an electrical switch valve for the 5th hydraulic function, the electrical switch valve must operate at 12 V.

- Contact the authorised service centre if required.

Plug connectors on the lift mast

▷

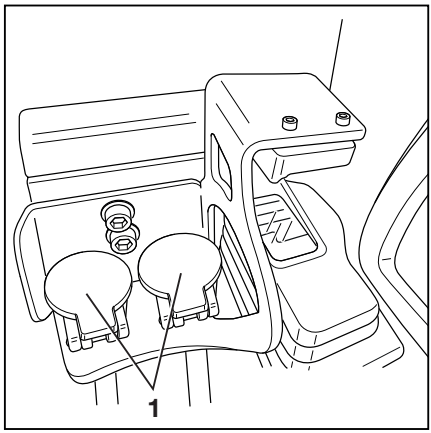

– Before fitting the attachment, depressurise the hydraulic system; see the chapter entitled "Depressurising the hydraulic system".

⚠ CAUTION

Risk of damage to components!

Open connections on the plug connectors (1) can become dirty. Dirt can enter the hydraulic system. The plug connectors can become stiff.

– Once the attachment has been disassembled, seal the plug connectors using the protective caps.

Mounting attachments

Only competent persons are permitted to mount and connect the energy supply to the attachment.

– Observe the information provided by the manufacturer and supplier of the attachment when doing so.

NOTE

Please observe the definition of the following responsible person: "competent person".

– Switch off the truck.

– Assemble the attachment.

– Switch on the truck.

– Check and ensure all functions of the installed attachment.

Load capacity with attachment

The permissible load capacity of the attachment and the allowable load (load capacity and load moment) of the truck must not be exceeded by the combination of attachment and payload. Comply with the specifications of the manufacturer and supplier of the attachment.

– Observe the residual load capacity rating plate, see the chapter entitled "Picking up a load using attachments".

General instructions for controlling attachments

Attachments can be controlled via the first four hydraulic functions but also as a variant via the 5th function. The 5th function is activated via a button on the operating device and by moving the operating device or additional push buttons.

The way in which attachments (variant) are controlled depends on the operating devices included in the truck's equipment.

Possible equipment variants include:

- Multi-lever
- Double mini-lever
- Double mini-lever with a 5th function (variant)
- Triple mini-lever
- Triple mini-lever with a 5th function (variant)
- Quadruple mini-lever
- Quadruple mini-lever with a 5th function (variant)
- Fingertip
- Fingertip with a 5th function (variant)
- Joystick 4Plus
- Joystick 4Plus with a 5th function (variant)

– To control attachments, see the sections relating to the respective operating devices in this chapter.

⚠ WARNING

Use of attachments can give rise to additional hazards such as a change in the centre of gravity, additional danger areas etc.

Attachments must only be deployed for their intended use as described in the relevant operating instructions. Drivers must be taught how to operate the attachments.

Loads may only be picked up and transported with attachments if the loads are securely grasped and attached. If necessary, the loads must also be secured against slipping, rolling away, falling over, swinging and tipping over. Note that any change to the location of the load centre of gravity will affect the stability of the truck.

– Observe the capacity rating plate for the attachments being used.

NOTE

If several hydraulic functions are used at the same time, these functions can influence each other. For example, if the fork carriage is raised and an attachment is operated at the same time, this may change the lifting speed or the operating speed of the attachment.

NOTE

Further variants and functions are available in addition to the functions described below. The directions of movement can be seen in the pictograms on the operating devices. All the attachments described fall into the category of equipment variants. An exact description of the respective movements or actions of the attachment fitted can be found in the relevant operating instructions.

With fleet manager access authorisation (variant), the fleet manager can adjust the speed of the auxiliary hydraulics for attachments.

– See also the section entitled "Adjusting the hydraulic speed for attachments" in this chapter.

Attachment example for the connection of the auxiliary hydraulics

NOTE

The authorised service centre will tell you which attachments can be used with this truck.

The connection of attachments to the auxiliary hydraulics is performed as per the diagram, as highlighted in the operating instructions for the attachment.

– Observe the "Information on the auxiliary hydraulics" in the "Technical data" chapter.

In the menu for the available hydraulic axles for attachments, the designation `Hydraulic axle` specifies the connection of the corresponding auxiliary hydraulics. See also the section entitled "Adjusting the hydraulic speed for attachments" in this chapter.

Attachment example for an attachment for adjustment of the fork arms ▷

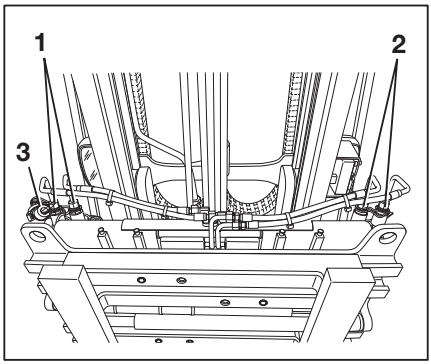

1 Auxiliary hydraulics 1
2 Auxiliary hydraulics 2
3 Electrical connection for switch valve 1 (two switch valves are possible)

If an attachment is connected to the auxiliary hydraulics 1 (1) and this attachment requires another function, this is referred to as the function of the auxiliary hydraulics 3.

There is an electrical connection (3) for the switch valve that is required for this purpose.

The same applies to the auxiliary hydraulics 4, which is fed from the auxiliary hydraulics 2 (2) and is implemented by an additional connection for a switch valve that is not shown here.

NOTE

If one switch valve is used, the auxiliary hydraulic functions 1 & 3 and 2 & 4 that are supplied by this switch valve cannot be operated simultaneously. The switch valve supplies either auxiliary hydraulics 1 & 3 or 2 & 4.

Adjusting the hydraulic speed for attachments

If different attachments are mounted, the fleet manager can adjust the hydraulic speed for attachments and thus the flow rate of hydraulic oil. Obtain the necessary values from the operating instructions for the attachment. The authorised service centre will help to make the correct adjustments.

– Observe the "Information on the auxiliary hydraulics" in the "Technical data" chapter.

The "Information on the auxiliary hydraulics" differs depending on the truck. Take this into consideration when selecting the attachment.

NOTE

The adjustment procedure requires access authorisation for the fleet manager. Access to the settings menu is only available if the truck is at a standstill and the parking brake is applied. If the parking brake is released prematurely, the settings menu will close.

– Apply the parking brake.
– Press the button.
– Press the softkey.
– Activate the "Access authorisation for the fleet manager".
– Press the `Auxiliary hydraulics` softkey.

This menu lists all the available hydraulic axles for attachments.

– Refer to the operating instructions of the attachment to determine which hydraulic axle is occupied by the attachment.

The authorised service centre will help you determine the axles.

Setting the revolution speed

– Push the softkey for the hydraulic axle to be configured.

▷

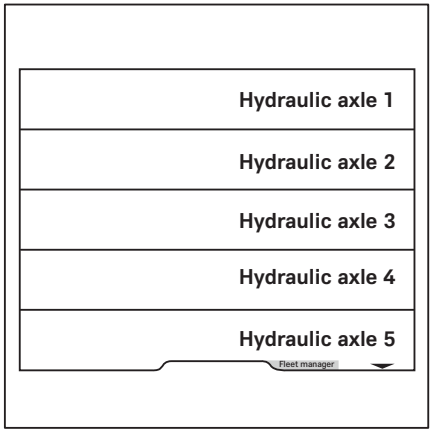

This menu indicates the supply flow. ▷

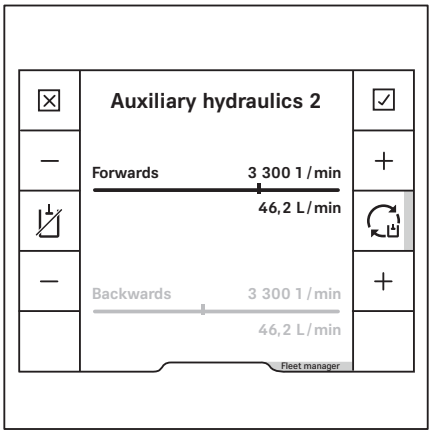

The return flow is shown in a lighter colour.

- The currently set speed of the hydraulic pump is given in `rpm`
- The currently set supply flow rate is given in `L/min`.

NOTE

The supply flow rate depends on the speed.

The return flow automatically adjusts to the set supply flow. When the orange activation bar next to the softkey lights up, synchronisation takes place automatically. The return flow is shown only dimly on the display.

To adjust the revolution speed, press the + or − softkey.

– To save the setting, press the ☑ softkey.

The settings are saved.

– To cancel the setting, press the ☒ softkey.

The settings return to the most recently set value.

Locking the flow rate

You can also lock the hydraulic oil flow rate in full.

– To do so, press the softkey.

The hydraulic oil flow for this hydraulic axle is locked.

Setting the return flow rate separately

Depending on the attachment, the return flow rate may need to be set separately.

– To do so, press the softkey.

The return flow is displayed in addition to the supply flow at full brightness.

To adjust the revolution speed, press the + or − softkey.

– To save the setting, press the ☑ softkey.

The settings are saved.

– To cancel the setting, press the ☒ softkey.

The settings return to the most recently set value.

▷

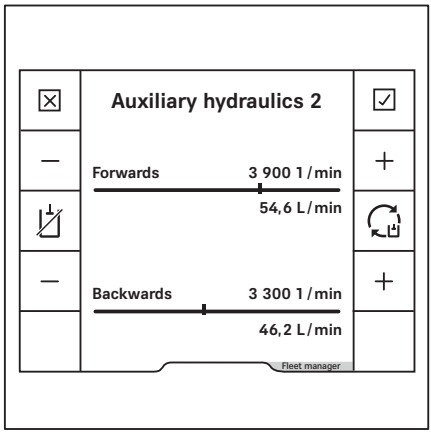

Clamp locking mechanism (variant)

This truck can be fitted with a clamp locking mechanism for clamping attachments. The clamp locking mechanism prevents the clamp from opening unintentionally if the operating function is inadvertently triggered.

⚠ DANGER

If the correct function of the clamp locking mechanism is not guaranteed, there is a risk to life from a falling load!

If other attachments in addition to the clamp are used on this truck, the clamp locking mechanism must be reassigned to the corresponding operating device every time the clamp is reassembled.

– Make sure that the authorised service centre reassigns the function of the clamp locking mechanism to the corresponding operating device.

– Make sure that the additional clamp locking mechanism function is available.

– Observe the section entitled "Fitting attachments".

NOTE

For technical reasons, clamping attachments ***must not*** *be controlled via the "5th function".*

The sections entitled "Controlling attachments using ..." describe how the clamp locking mechanism is operated.

– See the section concerning the relevant operating device.

Controlling attachments using multi-lever operation

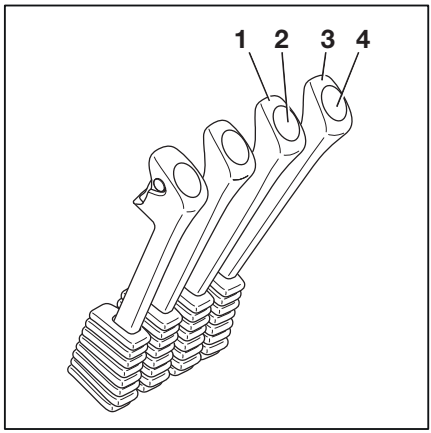

In this version, the attachments (variant) are controlled using the operating levers (1, 3). The pictograms for the hydraulic functions (2, 4) are affixed to the operating levers.

– Observe the pictograms (2) or (4).

The pictograms are arranged according to the directions of movement of the operating lever (1) or (3).

The following applies:

– Move the operating lever forwards.

The attachment moves in the direction of movement shown in the upper part of the pictogram.

– Move the operating lever backwards.

The attachment moves in the direction of movement shown in the lower part of the pictogram.

– Note the following attachment functions and pictograms.

Pictogram	Attachment function
	Move the side shift frame or fork forwards
	Move the side shift frame or fork backwards
	Move the sideshift to the left
	Move sideshift to the right
	Adjust fork arms: open
	Adjust fork arms: close
	Push off the load
	Pull in the load
	Rotate to the left
	Rotate to the right
	Tip shovel over
	Tip shovel back
	Swivel the fork to the left
	Swivel the fork to the right

NOTE

The pictograms are affixed according to the attachment fitted at the factory. If an attachment with different functions is fitted, the authorised service centre must check that the pictograms bear the correct representation and must change them if necessary.

Clamp locking mechanism

NOTE

For technical reasons, no clamp locking mechanism is available for the multi-lever operating device.

Controlling attachments using a double mini-lever ▷

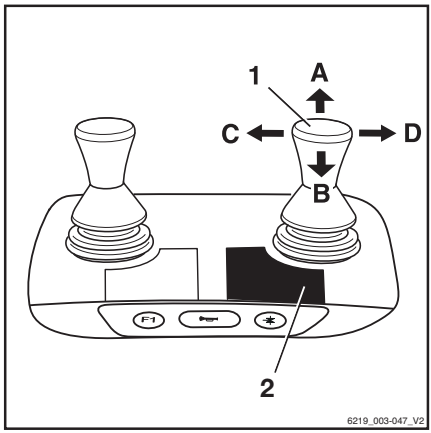

In this version, the attachments (variant) are controlled using the "attachments" cross lever (1). The adhesive label bearing the pictograms for the hydraulic functions (2) is affixed at the designated point.

– If the adhesive label becomes illegible or is missing, please contact your authorised service centre.

– Observe the pictograms for the attachment functions on the adhesive label (2).

The pictograms on the "attachments" cross lever (1) show the respective functions that are activated by this lever.

The pictograms are arranged according to the direction of movement of the "attachments" cross lever (1).

The following applies:

– Move the "attachments" cross lever(1) in the direction of arrow (A), (B), (C) or (D).

The attachment moves accordingly in the directions (A), (B), (C) or (D) as shown in the pictogram.

Pictogram	Attachment function
	Move the side shift frame or fork forwards
	Move the side shift frame or fork backwards
	Move the sideshift to the left
	Move sideshift to the right
	Adjust fork arms: open
	Adjust fork arms: close
	Release load retainer
	Clamp load retainer
	Open clamps
	Close clamps
	Rotate to the left
	Rotate to the right
	Tip shovel over
	Tip shovel back

NOTE

The pictograms are affixed according to the attachment fitted at the factory. If an attachment with different functions is fitted, the authorised service centre must check that the pictograms bear the correct representation and must change them if necessary.

Clamp locking mechanism

▷

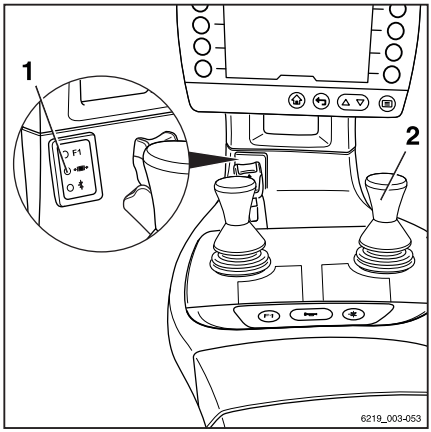

– To release the clamp locking mechanism, push the operating lever (2) forwards.

The clamp locking mechanism is released. The LED for the "clamp release" (1) lights up and remains lit while the clamp locking mechanism is released.

NOTE

The hydraulic function for opening the clamp is available for one second after the clamp locking mechanism is released. After one second, the clamp locking mechanism is automatically reactivated.

– To open the clamp, push the operating lever (2) forwards again.

It is not necessary to release the clamp locking mechanism in order to close the clamp.

– To close the clamp, pull the operating lever (2) backwards.

Controlling attachments using the double mini-lever and the 5th function

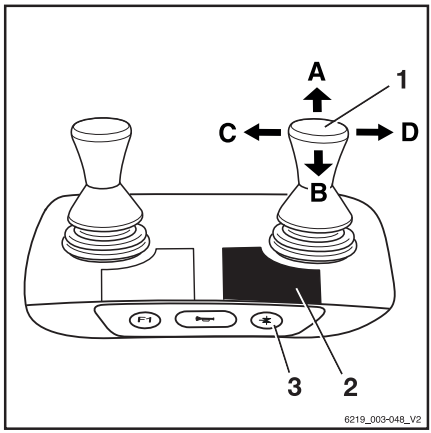

NOTE

For technical reasons, clamping attachments ***must not*** *be controlled via the "5th function".*

The function key for the "5th function" (3) and the cross lever (1) are used to control the "5th function".

The adhesive label bearing the pictograms for the hydraulic functions (2) is affixed at the designated point.

– If the adhesive label becomes illegible or is missing, please contact your authorised service centre.

– Observe the pictograms for the attachment functions on the adhesive label (2).

The pictograms on the "attachments" cross lever show the respective functions that are activated by this lever.

The following applies:

– Actuate the function key for the "5th function" (3).

The LED for the "5th function" lights up.

– Move the "attachments" cross lever (1) in the direction of the arrow (A), (B), (C) or (D).

The attachment moves accordingly in the directions (A), (B), (C) or (D) as shown in the pictogram.

Example using the pictograms for configuration (1):

If the "attachments" cross lever (1) is moved in the direction of the arrow (A), the fork is extended.

If the function key for the "5th function" (3) is actuated and the "attachments" cross lever (1) is moved in the direction of the arrow (A), the fork arms open.

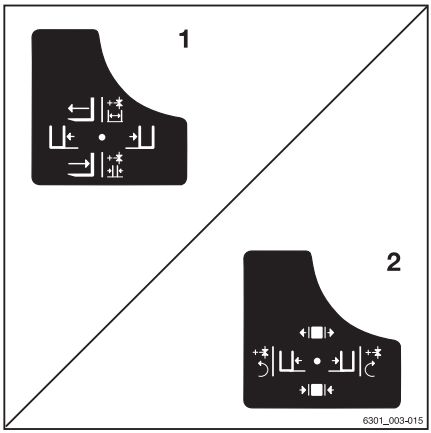

Pictogram	Attachment function
	Auxiliary hydraulics "5th function"
	Move the side shift frame or fork forwards
	Move the side shift frame or fork backwards
	Move the sideshift to the left
	Move sideshift to the right
	Adjust fork arms: open
	Adjust fork arms: close
	Rotate to the left
	Rotate to the right

NOTE

The pictograms are affixed according to the attachment fitted at the factory. If an attachment with different functions is fitted, the authorised service centre must check that the pictograms bear the correct representation and must change them if necessary.

Controlling attachments using a triple mini-lever ▷

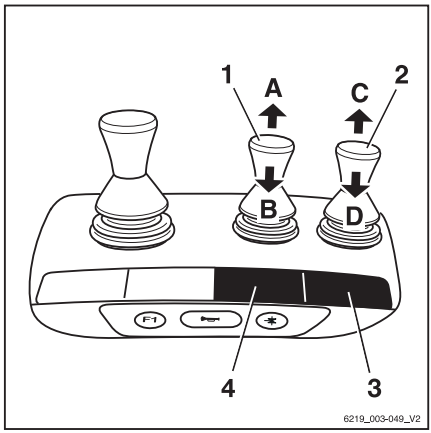

In this version, the attachments (variant) are controlled using the operating levers (1, 2). The adhesive label bearing the pictograms for the hydraulic functions (3) for the operating lever (2) and the adhesive label (4) for the operating lever (1) are affixed at the designated points.

– If the adhesive labels become illegible or are missing, please contact your authorised service centre.

– Observe the pictograms for the attachment functions on the adhesive labels (3, 4).

The pictograms on the operating levers show the respective functions that are activated by these levers.

The following applies:

– Move the operating lever (1) in the direction of the arrow (A) or (B).

The attachment moves accordingly in the directions (A) or (B) as shown in the pictogram.

– Move the operating lever (2) in the direction of the arrow (C) or (D).

The attachment moves accordingly in the directions (C) or (D) as shown in the pictogram.

Pictogram	Attachment function
	Move the side shift frame or fork forwards
	Move the side shift frame or fork backwards
	Move the sideshift to the left
	Move sideshift to the right
	Adjust fork arms: open
	Adjust fork arms: close
	Release load retainer
	Clamp load retainer
	Open clamps
	Close clamps
	Rotate to the left
	Rotate to the right

Picto-gram	Attachment function
	Tip shovel over
	Tip shovel back

NOTE

The pictograms are affixed according to the attachment fitted at the factory. If an attachment with different functions is fitted, the authorised service centre must check that the pictograms bear the correct representation and must change them if necessary.

Clamp locking mechanism

▷

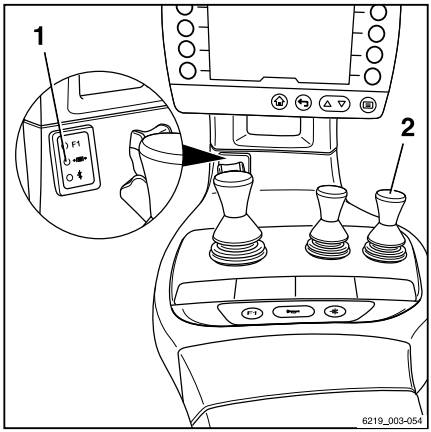

– To release the clamp locking mechanism, push the operating lever (2) forwards.

The clamp locking mechanism is released. The LED for the "clamp release" (1) lights up and remains lit while the clamp locking mechanism is released.

NOTE

The hydraulic function for opening the clamp is available for one second after the clamp locking mechanism is released. After one second, the clamp locking mechanism is automatically reactivated.

– To open the clamp, push the operating lever (2) forwards again.

It is not necessary to release the clamp locking mechanism in order to close the clamp.

– To close the clamp, pull the operating lever (2) backwards.

Controlling attachments using the triple mini-lever and the 5th function

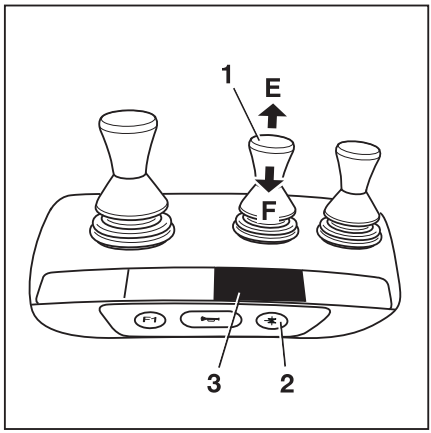

NOTE

For technical reasons, clamping attachments ***must not*** *be controlled via the "5th function".*

The function key for the "5th function" (2) and the operating lever (1) are used to control the "5th function".

The adhesive label bearing the pictograms for the hydraulic functions (3) is affixed at the designated point.

– If the adhesive label becomes illegible or is missing, please contact your authorised service centre.

– Observe the pictograms for the attachment functions on the adhesive label (3).

The pictograms on the operating lever show the respective functions that are activated by this lever.

The following applies:

– Actuate the function key for the "5th function" (2).

The LED for the "5th function" lights up.

– Move the operating lever (1) in the direction (E) or (F).

The attachment moves accordingly in the directions (E) or (F) as shown in the pictogram.

Example using the pictograms for configuration (1):

If the operating lever (1) is moved in the direction of the arrow (E), the sideshift moves to the left.

If the function key for the "5th function" (2) is actuated and the operating lever (1) is moved in the direction of the arrow (E), the fork arms open.

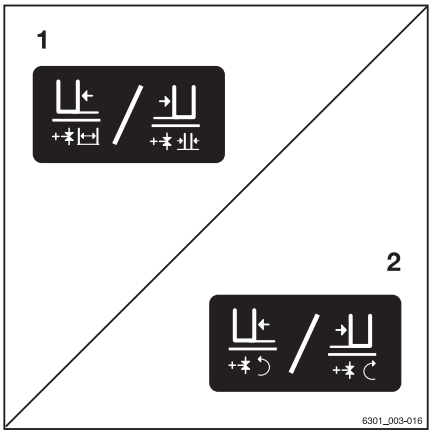

Pictogram	Attachment function
	Auxiliary hydraulics "5th function"
	Move the sideshift to the left
	Move sideshift to the right
	Adjust fork arms: open
	Adjust fork arms: close
	Rotate to the left
	Rotate to the right

NOTE

The pictograms are affixed according to the attachment fitted at the factory. If an attachment with different functions is fitted, the authorised service centre must check that the pictograms bear the correct representation and must change them if necessary.

Controlling attachments using a quadruple mini-lever ▷

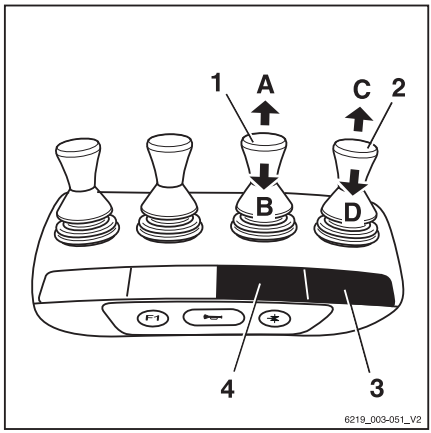

In this version, the attachments (variant) are controlled using the operating levers (1, 2). The adhesive label bearing the pictograms for the hydraulic functions (3) for the operating lever (2) and the adhesive label (4) for the operating lever (1) are affixed at the designated points.

– If the adhesive labels become illegible or are missing, please contact your authorised service centre.

– Observe the pictograms for the attachment functions on the adhesive labels (3, 4).

The pictograms on the operating levers show the respective functions that are activated by these levers.

The following applies:

– Move the operating lever (1) in the direction of the arrow (A) or (B).

The attachment moves accordingly in the directions (A) or (B) as shown in the pictogram.

– Move the operating lever (2) in the direction of the arrow (C) or (D).

The attachment moves accordingly in the directions (C) or (D) as shown in the pictogram.

Pictogram	Attachment function
	Move the side shift frame or fork forwards
	Move the side shift frame or fork backwards
	Move the sideshift to the left
	Move sideshift to the right
	Adjust fork arms: open
	Adjust fork arms: close
	Release load retainer
	Clamp load retainer
	Open clamps
	Close clamps
	Rotate to the left
	Rotate to the right

Picto-gram	Attachment function
	Tip shovel over
	Tip shovel back

NOTE

The pictograms are affixed according to the attachment fitted at the factory. If an attachment with different functions is fitted, the authorised service centre must check that the pictograms bear the correct representation and must change them if necessary.

Clamp locking mechanism

▷

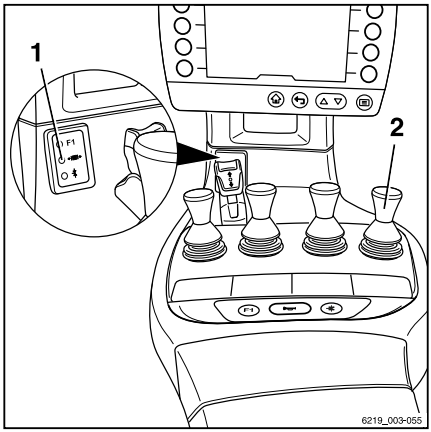

– To release the clamp locking mechanism, push the operating lever (2) forwards.

The clamp locking mechanism is released. The LED for the "clamp release" (1) lights up and remains lit while the clamp locking mechanism is released.

NOTE

The hydraulic function for opening the clamp is available for one second after the clamp locking mechanism is released. After one second, the clamp locking mechanism is automatically reactivated.

– To open the clamp, push the operating lever (2) forwards again.

It is not necessary to release the clamp locking mechanism in order to close the clamp.

– To close the clamp, pull the operating lever (2) backwards.

Controlling attachments using the quadruple mini-lever and the 5th function

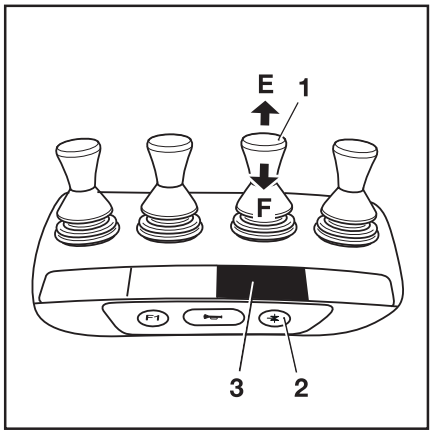

NOTE

For technical reasons, clamping attachments ***must not*** *be controlled via the "5th function".*

The function key for the "5th function" (2) and the operating lever (1) are used to control the "5th function".

The adhesive label bearing the pictograms for the hydraulic functions (3) is affixed at the designated point.

– If the adhesive label becomes illegible or is missing, please contact your authorised service centre.

– Observe the pictograms for the attachment functions on the adhesive label (3).

This essentially involves the following:

– Actuate the function key for the "5th function" (2).

The LED for the "5th function" lights up.

– Move the operating lever (1) in the direction (E) or (F).

The attachment moves accordingly in the directions (E) or (F) as shown in the pictogram.

Example using the pictograms for configuration (1):

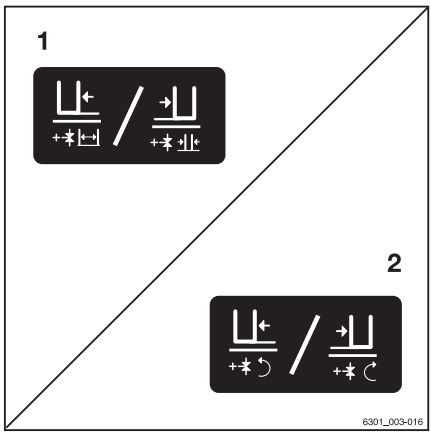

If the operating lever (1) is moved in the direction of the arrow (E), the sideshift moves to the left.

If the function key for the "5th function" (2) is actuated and the operating lever (1) is moved in the direction of the arrow (E), the fork arms open.

Pictogram	Attachment function
	Auxiliary hydraulics "5th function"
	Move the sideshift to the left
	Move sideshift to the right
	Adjust fork arms: open

Picto-gram	Attachment function
	Adjust fork arms: close
	Rotate to the left
	Rotate to the right

NOTE

The pictograms are affixed according to the attachment fitted at the factory. If an attachment with different functions is fitted, the authorised service centre must check that the pictograms bear the correct representation and must change them if necessary.

Controlling attachments using the Fingertip

▷

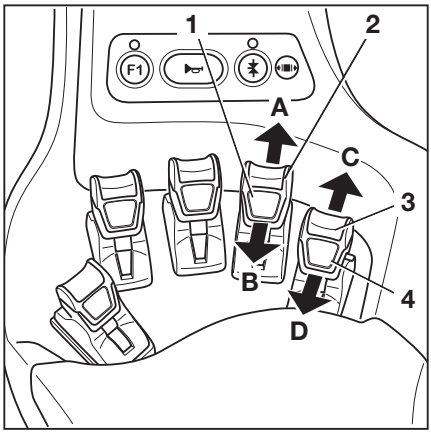

In this version, the attachments (variant) are controlled using the operating levers (1) and (2). The adhesive label bearing the pictograms for the hydraulic functions (3) for the operating lever (2) and the adhesive label (4) for the operating lever (1) are affixed at the designated points.

– If the adhesive labels become illegible or are missing, please contact your authorised service centre.

– Observe the pictograms for the attachment functions on the adhesive labels (3, 4).

The pictograms on the operating levers show the respective functions that are activated by these levers.

The following applies:

– Move the operating lever (1) in the direction of the arrow (A) or (B).

The attachment moves accordingly in the directions (A) or (B) as shown in the pictogram.

– Move the operating lever (2) in the direction of the arrow (C) or (D).

The attachment moves accordingly in the directions (C) or (D) as shown in the pictogram.

Picto-gram	Attachment function
	Move the side shift frame or fork forwards
	Move the side shift frame or fork backwards
	Move the sideshift to the left
	Move sideshift to the right
	Adjust fork arms: open
	Adjust fork arms: close
	Release load retainer
	Clamp load retainer
	Open clamps
	Close clamps
	Rotate to the left
	Rotate to the right
	Tip shovel over
	Tip shovel back

NOTE

The pictograms are affixed according to the attachment fitted at the factory. If an attachment with different functions is fitted, the authorised service centre must check that the pictograms bear the correct representation and must change them if necessary.

Clamp locking mechanism

▷

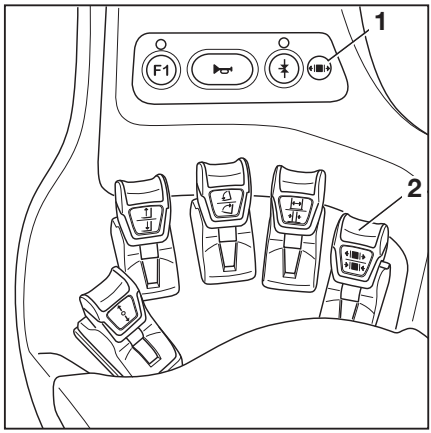

– To release the clamp locking mechanism, push the operating lever (2) forwards.

The clamp locking mechanism is released. The LED for the "clamp release" (1) lights up and remains lit while the clamp locking mechanism is released.

NOTE

The hydraulic function for opening the clamp is available for one second after the clamp locking mechanism is released. After one second, the clamp locking mechanism is automatically reactivated.

– To open the clamp, push the operating lever (2) forwards again.

It is not necessary to release the clamp locking mechanism in order to close the clamp.

– To close the clamp, pull the operating lever (2) backwards.

Controlling attachments using the Fingertip and the 5th function

▷

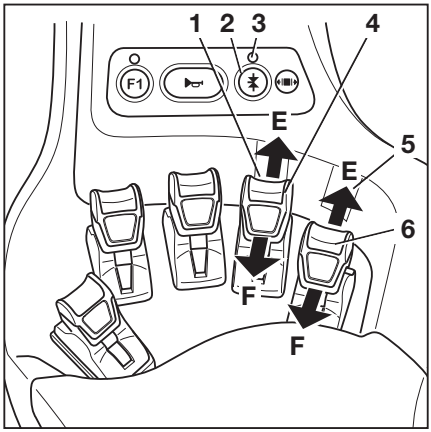

NOTE

For technical reasons, clamping attachments ***must not*** *be controlled via the 5th function.*

The function key for the "5th function" (2) and the operating levers (1, 6) are used to control the "5th function".

The pictograms (1, 5) behind the operating levers show the functions that are activated by the respective levers.

– If the adhesive labels become illegible or are missing, please contact your authorised service centre.

The following applies:

– Actuate the function key for the "5th function" (2).

The LED for the "5th function" (3) lights up.

– Move the operating lever (4) or (6) in the direction of the arrow (E) or (F).

The attachment moves accordingly in the directions (E) or (F) as shown in the pictogram.

NOTE

The place where the adhesive label bearing the pictograms (1) or (5) is affixed shows which operating lever is intended to operate the "5th function". The pictograms show the functions that are activated by switching with the function key (2).

Pictogram	Attachment function
	Auxiliary hydraulics "5th function"
	Move the sideshift to the left

Picto-gram	Attachment function
	Move sideshift to the right
	Adjust fork arms: open
	Adjust fork arms: close
	Rotate to the left
	Rotate to the right

NOTE

The pictograms are affixed according to the attachment fitted at the factory. If an attachment with different functions is fitted, the authorised service centre must check that the pictograms bear the correct representation and must change them if necessary.

Controlling attachments using the Joystick 4Plus

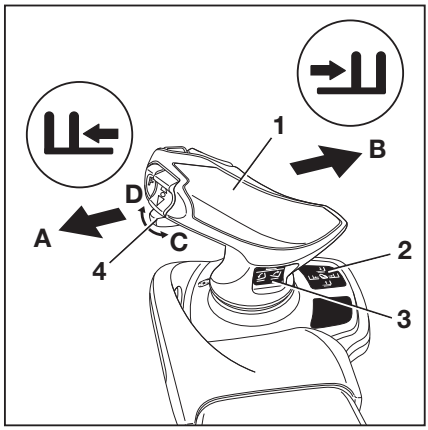

In this version, the attachments (variant) are controlled via the Joystick 4Plus (1) and the slider (4). The adhesive label bearing the pictograms for the hydraulic functions (2) for the Joystick 4Plus (1) and the adhesive label (3) for the slider (4) are affixed at the designated points.

– If the adhesive labels become illegible or are not present, please contact your authorised service centre.

– Observe the pictograms for the attachment functions on the adhesive labels (2, 3).

The pictograms on the adhesive labels regarding operation of the Joystick 4Plus show the respective functions that are activated by the individual operating devices of the Joystick 4Plus.

The following applies:

– Move the Joystick 4Plus (1) in the direction of the arrow (A) or (B).

The attachment moves accordingly in the directions (A) or (B) as shown in the pictogram.

– Move the slider (4) in the direction of the arrow (C) or (D).

The attachment moves accordingly in the directions (C) or (D) as shown in the pictogram.

Pictogram	Attachment function
	Move side shift frame or fork forwards
	Move side shift frame or fork backward
	Move side shift to the left
	Move side shift to the right
	Adjust fork arms: open
	Adjust fork arms: close
	Release load retainer
	Clamp load retainer
	Open clamps
	Close clamps
	Rotate to the left

Picto-gram	Attachment function
	Rotate to the right
	Tip shovel over
	Tip shovel back

NOTE

The pictograms are affixed according to the attachment fitted at the factory. If an attachment with different functions is fitted, the authorised service centre must check that the pictograms bear the correct representation and must change them if necessary.

Clamp locking mechanism

▷

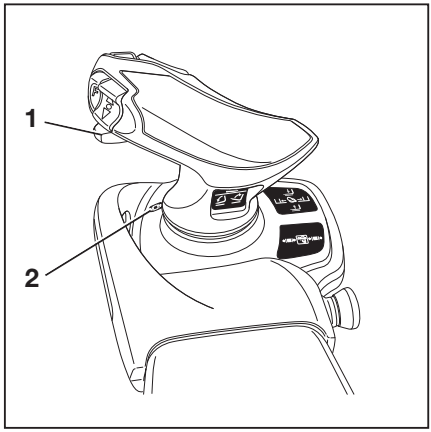

– To release the clamp locking mechanism, push the slider (1) to the left.

The clamp locking mechanism is released. The LED for the "clamp release" (2) lights up and remains lit while the clamp locking mechanism is released.

– To open the clamp, push the slider (1) to the left again.

NOTE

The hydraulic function for opening the clamp is available for one second after the clamp locking mechanism is released. After one second, the clamp locking mechanism is automatically reactivated.

It is not necessary to release the clamp locking mechanism in order to close the clamp.

– To close the clamp, push the slider (1) to the right again.

Controlling attachments using the Joystick 4Plus and the 5th function

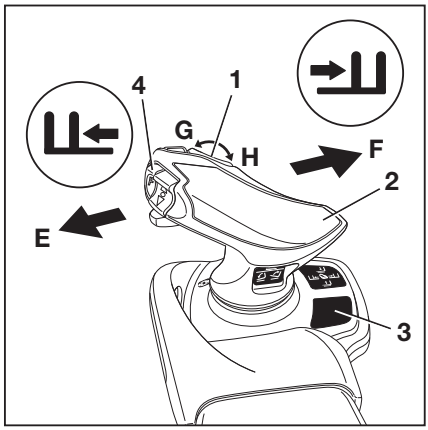

NOTE

*For technical reasons, clamping attachments **must not** be controlled via the 5th function.*

Use shift key "F" (4) and the Joystick 4Plus (2) and the horizontal rocker button (1) to control the "5th function".

The adhesive label bearing the pictograms for the hydraulic functions (3) for the Joystick 4Plus (2) and for the horizontal rocker button (1) is affixed at the designated point.

– If the adhesive label becomes illegible or is not present, please contact your authorised service centre.

The pictograms on the adhesive label regarding operation of the Joystick 4Plus show the respective functions that are activated by the individual operating devices of the Joystick 4Plus.

– Note the following attachment functions and pictograms.

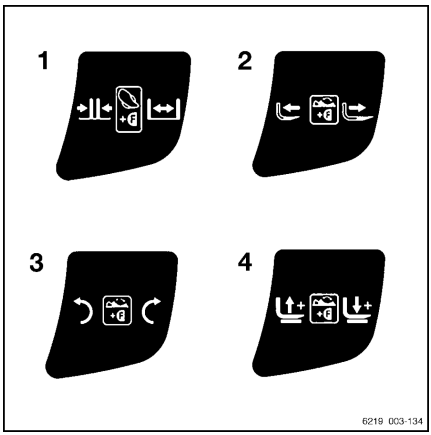

	Operating device	Function of the attachment
1	Shift key "F" and Joystick 4Plus	Adjust fork arms: close/open
2	Shift key "F" and horizontal rocker button	Adjust fork: backwards/forwards
3	Shift key "F" and horizontal rocker button	Swivel lift mast or fork: left/right
4	Shift key "F" and horizontal rocker button	Additional fork carriage: lift/lower

The following applies:

– Press and hold shift key "F" (4).

– Move the Joystick 4Plus (2) in the direction (E) or (F).

The attachment moves accordingly in the directions (E) or (F) as shown in the pictogram.

– Push the horizontal rocker button (1) in the direction (G) or (H).

The attachment moves accordingly in the directions (G) or (H) as shown in the pictogram.

– Release shift key "F" (4).

NOTE

The pictograms are affixed according to the attachment fitted at the factory. If an attachment with different functions is fitted, the authorised service centre must check that the pictograms bear the correct representation and must change them if necessary.

Picking up a load using attachments

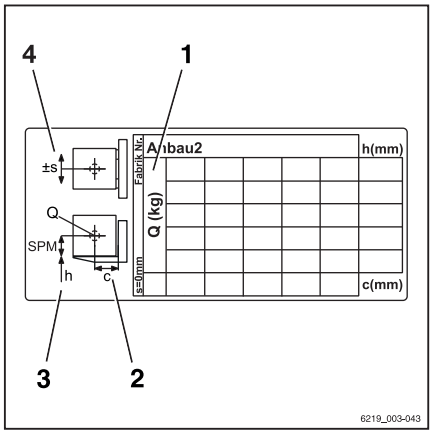

WARNING

Risk of accident!

Attachments must only be deployed for their intended use as described in the relevant operating instructions.

Drivers must be taught how to operate the attachments.

WARNING

Risk of accident!

Loads may only be picked up and transported with attachments if the loads are securely grasped and attached. Where necessary, loads must also be secured against slipping, rolling, falling over, swinging or tipping over. Note that any change to the position of the load centre of gravity will affect the stability of the truck.

Check the capacity rating plates for the attachments or combination of attachments.

– The rating plates show the permissible values for:

1 Load capacity Q (kg)
2 Load distance C (mm)
3 Lift height h (mm)
4 Permissible sideshift s (mm)

Auxiliary equipment

FleetManager (variant)

FleetManager is an equipment variant and can be fitted to the truck in different versions. The description and operation information can be found in the separate operating instructions for the corresponding FleetManager versions.

Shock recognition (variant)

The shock recognition is an equipment variant of the FleetManager (variant) in which an acceleration sensor is installed in the truck. The acceleration sensor records data arising from rapid accelerations or decelerations of the truck, e.g. in the event of an accident. This data can be electronically read out and evaluated.

– If you have any questions, please contact your authorised service centre.

Driver restraint systems (variants)

Different driver restraint systems are available as variants for this truck. The description and operation for these systems can be found in the separate "Driver restraint systems" operating instructions.

Actuating the windscreen wipers and windscreen washers (variant) ▷

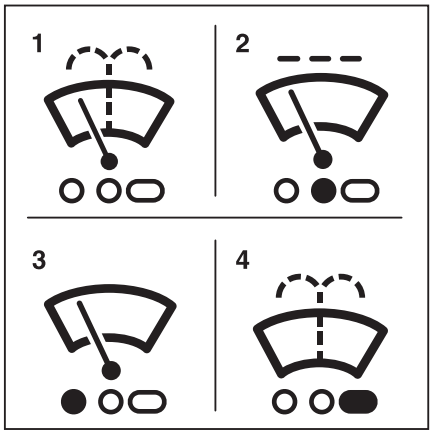

Pressing the softkey switches between the operating stages in the sequence shown below.

Press softkey	Operating stage
	Off
1st time	On
2nd time	Interval
3rd time	Off
Hold (possible in all operating stages)	Washer

– To activate the "On" operating stage, press the softkey (1).

The "On" operating stage is activated. The symbol (3) appears

– To activate the "Intermittent mode" operating stage, press the softkey again.

The symbol (2) is shown with an orange background.

– To activate the "Washer" operating stage, press and hold the softkey.

The "Washer" operating stage is activated. The symbol (4) is displayed for as long as the softkey is pressed.

– Once the window is clean, release the softkey.

The previous operating stage is reactivated.

– To switch this operating stage off, press the softkey repeatedly until the symbol (1) appears again on the display. The activation bar next to the symbol goes out.

Filling the washer system

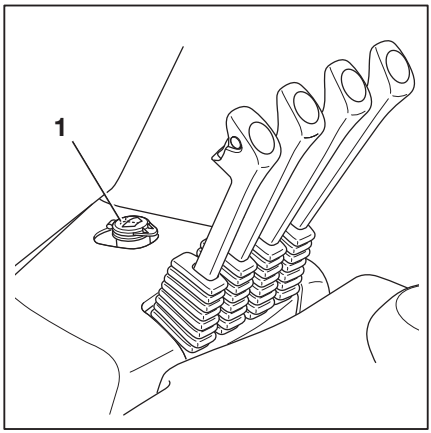

- Open the filler cap (1) of the washer system.
- Fill the washer reservoir with washer fluid as described in the "Maintenance data table".

⚠ CAUTION

Damage due to the effects of frost!

When water freezes, it expands. If the washer system is not filled with fluid that is suitable for use in winter, ice can form in the washer system and cause damage.

- If there is a risk of frost, use fluid that is suitable for winter use.

- Close the filler cap.
- Operate the screen washer system until washer fluid is discharged from the spray nozzles.

Run-on time for additional devices

Certain additional devices, such as terminals, take quite a long time to start up when the truck is switched on. Waiting for the additional device to start up after a short interruption of operation is annoying. To avoid this, the run-on time of the power supply can be adjusted via the display-operating unit. After the truck has been switched off, the additional device continues to be supplied with power during the run-on time.

- Activate the "Access authorisation for the fleet manager".
- Press the ☰ button.
- Press the ⚙ softkey.

– Press the `Truck settings` softkey. ▷

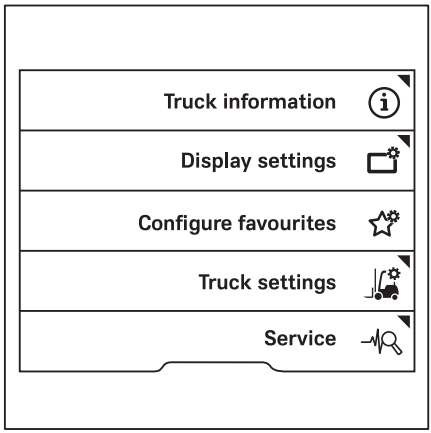

– Press the `Run-on time` softkey. ▷

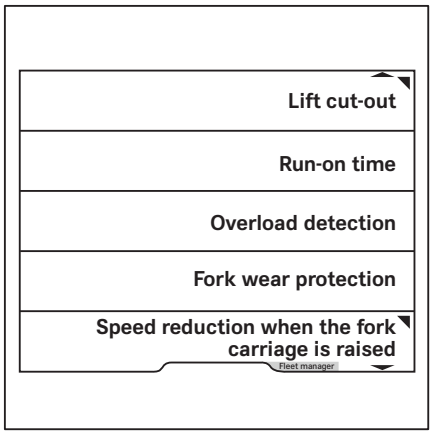

In this menu you can define the desired run-on time. ▷

– Enter the run-on time using softkeys `0 to 9`.

– To `save`, press the ☰ button.

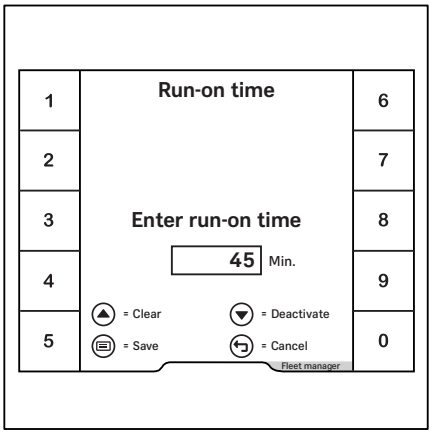

NOTE

If a run-on time has been activated, the truck does not switch off completely. The power supply for terminals remains active. No information appears on the display. However, the display may glow slightly. This is normal.

– Press the scroll button ▽ to deactivate the run-on time.

The menu closes.

Clipboard (variant) ▷

The clipboard (1) with reading lamp (2) is an equipment variant.

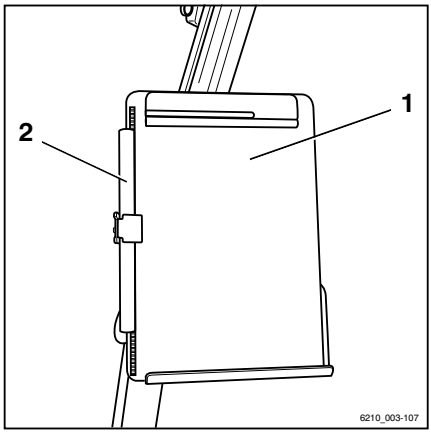

Fire extinguisher (variant)

The truck can be equipped with a fire extinguisher.

– Refer to the fire extinguisher labelling for operation and maintenance instructions.

Rear box

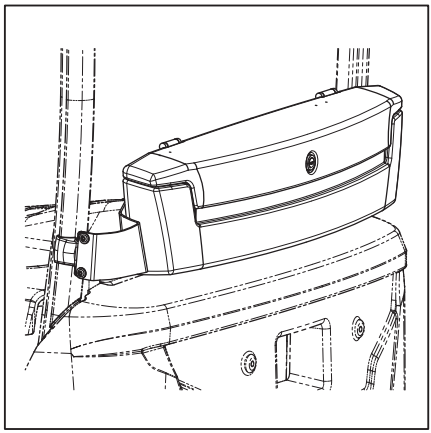

⚠ CAUTION

Risk of damage to components.

The rear box is made of plastic. It is sensitive to heat and scratches.

– Do **not** store any hot, sharp, pointed or hazardous objects in the rear box, e.g. exposed blades.

The rear box can accommodate bulky items that are difficult to store in the driver's cab, such as a charging cable or warning triangle. Note the following:

– Load the rear box with a maximum of 5 kg.

– Ensure that the cover is closed and locked while driving.

– Only fill and use the rear box to the extent that the cover can be closed and locked.

– To open, unlock the cover with the corresponding key.

– Lift the cover.

– To close, lower the cover.

– Lock the cover with the corresponding key.

SVI STILL Vehicle Interface (variant)

Description of SVI

The "SVI STILL Vehicle Interface" is an interface for connecting external fleet management and assistance systems to the truck. On a plug strip, it provides eight connection options for CAN bus, digital connections and a power supply. The SVI can be used to connect fleet management systems in accordance with VDI 4458 and assistance systems in accordance with VDI 4482. Energy and signals can be transferred via this interface.

⚠ CAUTION

The systems that can be connected via the SVI are fleet management systems and assistance systems; they **are not** safety systems. They help the driver to carry out their work with the truck.

The driver remains fully responsible for handling the truck safely.

– Always monitor the working environment of the truck and always operate the truck carefully.

⚠ CAUTION

Risk of component damage due to ingress of moisture.

– Make sure that the connector plugs of the external assistance systems are sealed.

NOTE

The plugs of the SVI are fitted with sealing plugs ex works. Remove the sealing plugs when connecting systems.

The installation position of the SVI in the truck depends on the truck type and the equipment:

- RX60: in the counterweight
- RX20: in the battery compartment next to the battery door
- RXE 10-16: in the driver's cab, behind the front panelling in the footwell

For trucks of the RX60 series, the interface can be located in various positions in the installation space within the counterweight. The installation position depends on the wheelbase of the truck and on which additional electrical components are installed in the truck, e.g. on-board charger, charging quick access or battery carrier.

The various possible installation positions are described below.

Installation situation RX60 25-35 short

Position of the "SVI STILL Vehicle Interface"(1) / counterweight (2)

▷

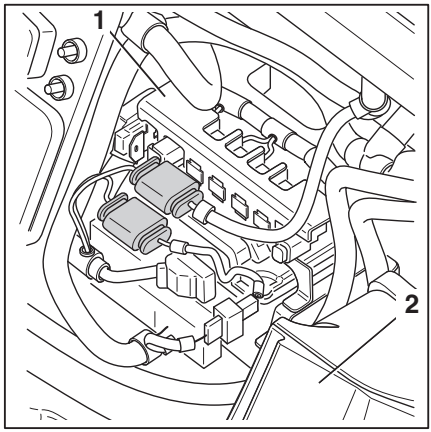

Installation situation RX60 25-35 short with charging quick access

Position of the "SVI STILL Vehicle Interface"(1) / counterweight (2)

▷

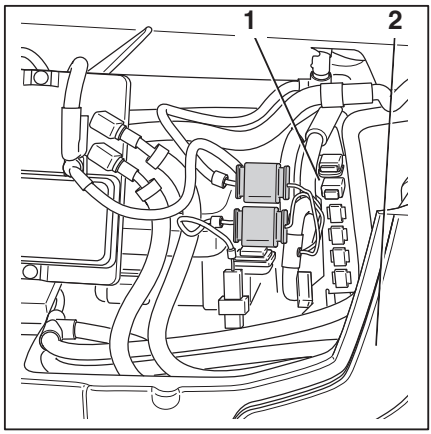

Installation situation RX60 25-35 short with on-board charger

Position of the "SVI STILL Vehicle Interface"(1) / counterweight (2)

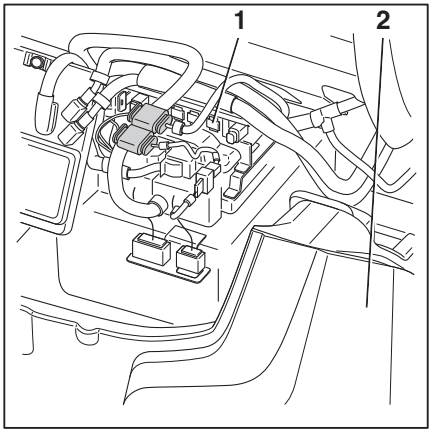

Installation situation RX60 25-35 short with battery carrier

Position of the "SVI STILL Vehicle Interface"(1) / counterweight (2)

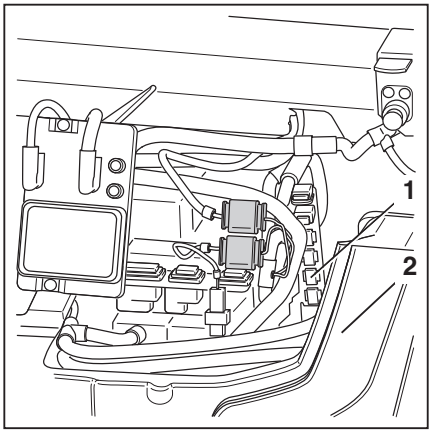

Installation situation RX60 25-35 long

Position of the "SVI STILL Vehicle Interface"(1) / counterweight (2)

▷

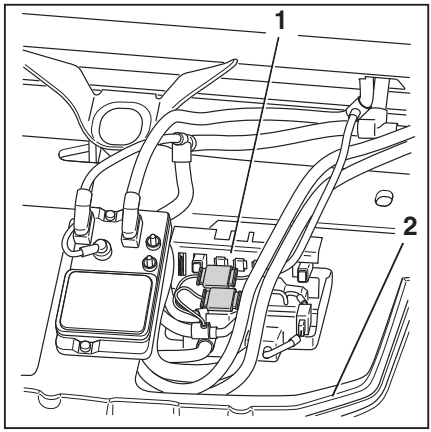

Installation situation RX60 25-35 long with charging quick access

Position of the "SVI STILL Vehicle Interface"(1) / counterweight (2)

▷

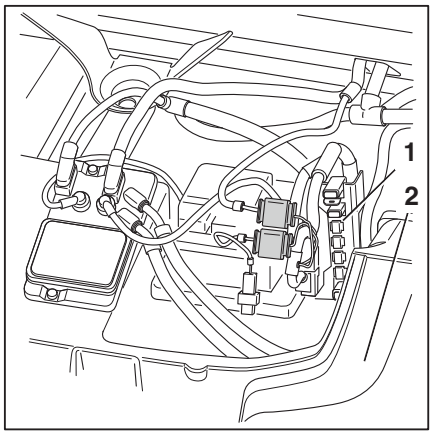

Installation situation RX60 25-35 long with on-board charger

Position of the "SVI STILL Vehicle Interface"(1) / counterweight (2)

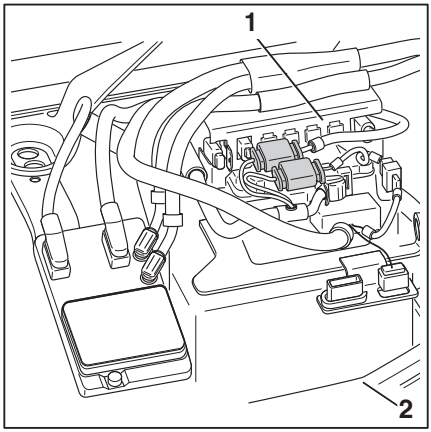

Installation situation RX60 25-35 long with battery carrier

Position of the "SVI STILL Vehicle Interface"(1) / counterweight (2)

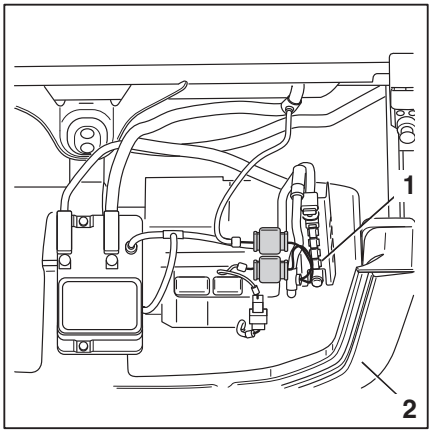

Installation situation RX60 40-50

Position of the "SVI STILL Vehicle Interface"(1) / counterweight (2)

▷

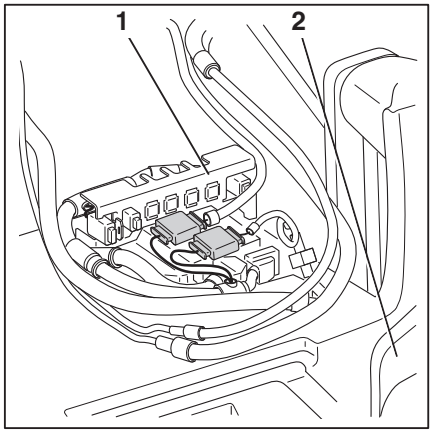

Installation situation RX60 40-50 with charging quick access

Position of the "SVI STILL Vehicle Interface"(1) / counterweight (2)

▷

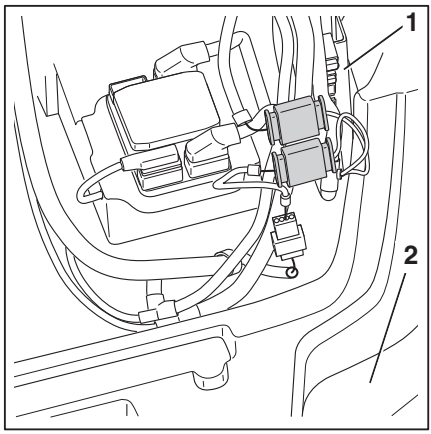

Installation situation RX60 40-50 with on-board charger

Position of the "SVI STILL Vehicle Interface"(1) / counterweight (2)

▷

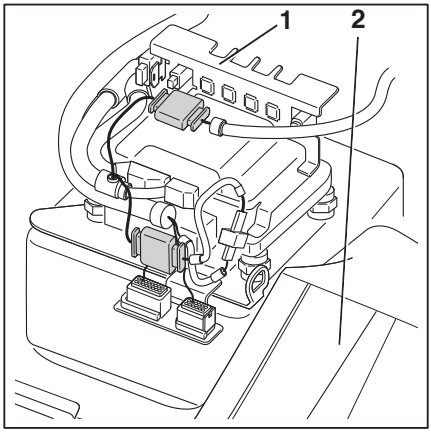

Installation situation RX60 40-50 with battery carrier

Position of the "SVI STILL Vehicle Interface"(1) / counterweight (2)

▷

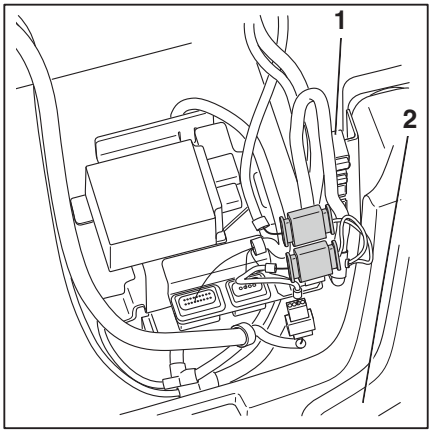

Installation situation RX20

Position of "SVI STILL Vehicle Interface"(1) ▷

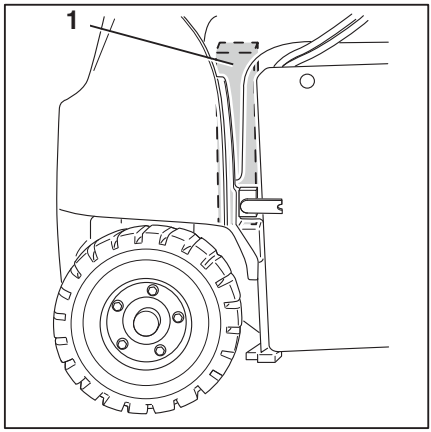

Installation situation RXE 10-16

Position of the "SVI STILL Vehicle Interface"(1) / parking brake lever (2). ▷

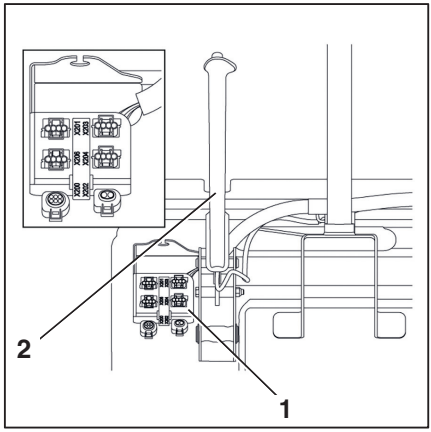

Pin assignment for the SVI

The SVI provides a total of eight connection options:

- Four CAN bus connections
- Three digital inputs
- One 12-V power supply
- Fuse: RX20/60 rated at 10 A. RXE 10-16 rated at 7 A.

Pos.	Plug designation	Plug type	Pin assignment
(1)	X202: 12-V supply with 60 W (more on request)	FEP plug 2-pin female, model 42034000 (page on third-party system, manufacturer FEP)	Pin 1: +12 V Pin 2: GND
(2)	X201: CAN 1 (VDI 4458)	Saab plug 4-pin (pin), model 1-965261-1 (page on third-party system, manufacturer TE), pin assignment in accordance with VDI 4458	Pin 1: CAN-H Pin 2: CAN-L Pin 3: +12 V (output) Pin 4: GND chassis
(3)	X206: CAN 6 (VDI 4482)	SAAB plug 4-pin (pin), model 1-965261-1 (page on third-party system, manufacturer TE), pin assignment in accordance with VDI 4482	Pin 1: CAN H 6 Pin 2: CAN L 6 Pin 3: +12 V (input) Pin 4: GND 6
(4)	X203: CAN 3 (VDI 4482)	SAAB plug 4-pin (pin), model 1-965261-1 (page on third-party system, manufacturer TE), pin assignment in accordance with VDI 4482	Pin 1: CAN H 3 Pin 2: CAN L 3 Pin 3: +12 V (input) Pin 4: GND 3
(5)	X204: CAN 4 (VDI 4482)	SAAB plug 4-pin (pin), model 1-965261-1 (page on third-party system, manufacturer TE), pin assignment in accordance with VDI 4482	Pin 1: CAN H 4 Pin 2: CAN L 4 Pin 3: +12 V (input) Pin 4: GND 4
(6)	X200: 3 digital inputs	FEP plug 6-pin female, model 42121700 (page on third-party system, manufacturer FEP)	Pin 1: dig_input1 Pin 2: DGND Pin 3: dig_input2 Pin 4: DGND Pin 5: dig_input3 Pin 6: DGND

SVI plug positions RX20

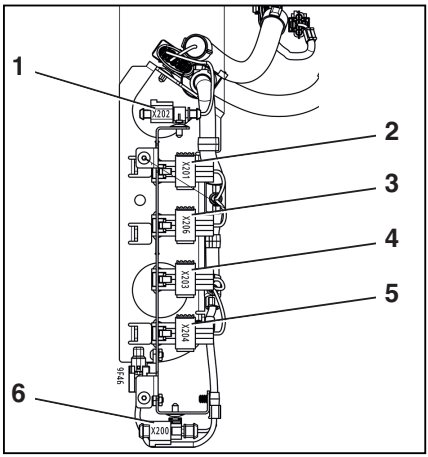

SVI plug positions RX60

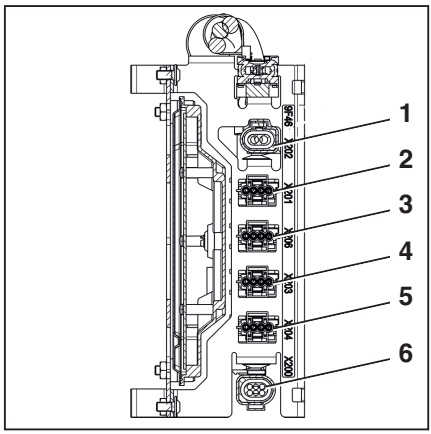

SVI plug positions RXE 10-16 ▷

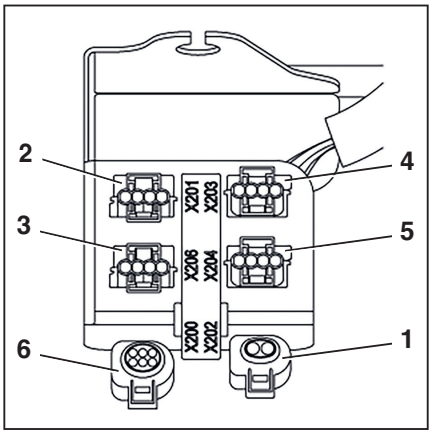

NOTE

The plug designations are also marked on an adhesive label next to the plugs.

NOTE

In the various RX60 versions, the SVI is installed either vertically or horizontally. This depends on the wheelbase of the truck and which other electronic components are installed in the truck.

Display messages

Messages

Certain truck conditions may cause event-related messages to be shown on the display of the display-operating unit.

There are messages about operation and messages about the truck. If a message about operation appears, the display-operating unit will prompt you to perform an action. A message about the truck means that the truck control unit has detected a fault.

The following types of message may appear individually or in combination:

- A graphic symbol
- The message
- A code consisting of a letter and a four-digit number

The message is displayed until either the cause has been corrected or the message has been acknowledged.

In the case of successive events, the respective messages are displayed one after another on the display.

Messages about operation

If messages about operation appear on the display-operating unit, an action must be carried out.

Code	Shown in display	Cause/action
	Log in	The access authorisation (variant) is preventing the use of the truck. - Enable the access authorisation.
	Battery empty	The charge state of the battery is too low for truck use. - Charge the battery. Special feature for STILL RXE: The drive unit is limited to 5 km/h. The working hydraulics are limited in performance.

Code	Shown in display	Cause/action
V6905 V6985 V6986 V6987 V7038	`Battery: Emergency mode`	The charge state of the battery is low. The truck experiences a power reduction. - Charge the battery. Special feature for STILL RXE: The drive unit is limited to 5 km/h. Only the "Classic" drive programme can be called up. "Sprint mode" is blocked. Load programmes 2 and 3 are blocked. The working hydraulics are limited in performance. - Switch the truck off and on again. - If the message continues to appear, please contact the authorised service centre.
	`Check battery`	This message about the on-board charger is triggered by different causes: A possible fault in the electrical connection between the battery and the on-board charger. The fuse for the on-board charger on the truck or the on-board charger is defective. The battery has a fault. The battery has exceeded its service life. The battery is incorrectly configured. - Contact your authorised service centre.
	`Battery recovery low`	The battery is too cold and/or too fully charged. The battery can only absorb limited current from the energy recovery of the regenerative brake. As a result, the regenerative brake only offers limited deceleration. The service brake is still fully operational. - Drive the truck **carefully** while actuating the hydraulic functions. Special feature for STILL RXE: The regenerative brake is deactivated or restricted. - See also the section entitled "Operating the service brake" in the "Driving" chapter.
V6962	`Check battery type`	This message about the on-board charger is triggered by different causes: The battery is defective. The wrong battery is connected. - Contact your authorised service centre.
	`Check battery acid level`	The acid level of the lead-acid battery is too low. - Do not continue to use the truck with this battery. - Check the acid level of the battery. Correct if necessary.

Code	Shown in display	Cause/action
V6965	Battery temperature high	The charging process has been automatically aborted due to the battery temperature being too high. This message about the on-board charger is triggered by different causes: The truck was heavily used before charging and the battery has become very hot. The ambient temperature is too high and the battery cannot cool down. The charging profile is configured incorrectly. - Allow the battery to cool down. - Allow the battery temperature symbol on the display-operating unit to flash. Change the "Start" symbol to "Pause".
	Check battery door sensor	The battery door sensor does not detect that the battery door is closed. - Make sure that the lock on the battery door is engaged. - If the message continues to appear, please contact the authorised service centre.
	Close battery door	The battery door is open. The truck will not move. - Close the battery door.
	Battery too cold	The lithium-ion battery is too cold. - Move the truck to a warmer environment.
	Release brake pedal !	The desired action is only possible after releasing the brake pedal. - Release the brake pedal.
	Acceleration restricted. Temperature !	If the temperature at the drive units is too high, this message appears. Sprint mode is no longer available. The truck switches to Classic mode. Acceleration is restricted.
	Curve Speed Control active !	Curve Speed Control reduces the curve speed. - No action is required.
	Data transmission required !	If the truck is equipped with this variant, data transmission must be carried out. - See the associated instructions.
	Diagnostic mode active	This message is not displayed during normal operation. - Contact your authorised service centre.
	Set pump speed	If an attachment is fitted and no pump speed has been set for its direction of movement, this message will be displayed. - Set the revolution speed with the access authorisation.

Code	Shown in display	Cause/action
V7059	Electrolyte circulation not working ⚠	The electrolyte circulation pump is not working. The charging process is continued without electrolyte circulation. Intermediate charging can cause damage to the battery. - Cancel the charging process. - Contact your authorised service centre.
	Development mode active ⚠	This message is not displayed during normal operation. - Contact your authorised service centre.
	Drive unit blocked !	This message follows earlier messages, e.g. overtemperature. It is not possible to drive the truck. - Wait until the message disappears. If necessary, switch the truck off and on again. - If the message continues to appear, please contact the authorised service centre.
	Sit on driver's seat	The truck is equipped with a seat contact switch. If the driver's seat is not occupied, the drives are disabled. - Sit on the driver's seat.
	Secure truck against rolling away ⚠	If the truck control unit detects a movement of the truck without the accelerator pedal being actuated, this message appears. - Apply the parking brake. - If necessary, secure the truck with wedges so that it cannot roll away.
	Secure truck against rolling away ⚠	The load on the driver's seat is released but the parking brake cannot engage due to a defect. - Secure the truck with wedges so that the truck does not roll away.
	Switch off truck?	If the truck is switched off without having first applied the parking brake, this message appears. - Apply the parking brake.
	Switch off truck anyway?	If the truck is to be switched off even though the parking brake is not applied, this message appears. - Secure the truck with wedges so that the truck does not roll away.
	Fault: Internal charger	The fan in the battery compartment for charging lead-acid batteries via the quick charge access is defective. - Do not charge lead-acid batteries via the quick charge access. - Contact your authorised service centre.

Code	Shown in display	Cause/action
	Truck stop: Access system	The access authorisation (variant) is preventing the use of the truck. This can be caused by entry of an incorrect code. - Enable the access authorisation.
	Fault: Battery	The truck control unit detects an error in the lithium-ion battery. - Switch the truck off and on again. - If the message continues to appear, please contact the authorised service centre.
	Fault: Battery	The truck control unit detects an error in the lithium-ion battery. - Switch the truck off and on again. - If the message continues to appear, please contact the authorised service centre. Special feature for STILL RXE: The truck will brake to a standstill. The drive unit is blocked. The working hydraulics are blocked.
V7074 V7051	Mains voltage error	This message about the on-board charger is triggered by different causes: The fuse for the power supply has been triggered. There is a defect in the power supply. There is a power failure. - Re-establish the power supply. When the power supply has been re-established, the charging process resumes automatically.
	Apply parking brake	If the truck control unit detects a movement of the truck without the accelerator pedal being actuated, this message appears. - Apply the parking brake.
	Release parking brake	The desired action is only possible after releasing the parking brake. - Release the brake pedal.
	Check parking brake	The truck control unit detects that the braking force of the electric parking brake is reducing. - Secure the truck with wedges so that the truck does not roll away. - Contact your authorised service centre.
	Parking brake cannot be applied	The parking brake cannot be applied due to a technical fault. - Apply the parking brake according to the section entitled "Malfunctions in the electric parking brake". - Secure the truck with wedges so that the truck does not roll away.

Code	Shown in display	Cause/action
	Parking brake cannot be applied	The parking brake cannot be applied due to a technical fault. - Apply the parking brake according to the section entitled "Malfunctions in the electric parking brake". - Secure the truck with wedges so that the truck does not roll away.
	Apply parking brake via button	The electric parking brake is not applying automatically. - Apply the parking brake by pressing the button.
	Release parking brake via button	The electric parking brake cannot be released automatically. - Release the parking brake by pressing the button.
	Parking brake: Maintenance required	The truck control unit detects that the electric parking brake needs servicing. - Secure the truck with wedges so that the truck does not roll away. - Contact your authorised service centre.
	Lower forks !	This message appears e.g. for precision load measurement (variant). - Lower the fork carriage.
	Lift height restriction active !	The lift height restriction (variant) is switched on. - Observe the heights of ceilings and entrances.
	Close cab door or seat belt !	If the seat belt is not fastened and the cab door (variant) is not closed, the driving speed is limited to 4 km/h and this message appears. - Close the cab door or fasten the seat belt.
	Close cab door !	If the cab door is opened while the truck is in motion, the truck brakes automatically to a speed of 4 km/h. - Close the cab door.
	Configuration: Please wait	This message is not displayed during normal operation. - Contact your authorised service centre.
	Remove charging cable	If the truck is equipped with an integrated charger (variant) and charging is complete, this message appears. - Disconnect the charger plug from the plug connection on the truck.

Code	Shown in display	Cause/action
A5902 V6954	Re-insert charging plug	The charging button on the truck connector for the charging cable has been held down too long. - Pull the truck connector out and re-insert it after approx. 2 seconds. The charger starts a new charging process.
	Charging port fan error	The fan in the battery compartment for charging with the quick charge access has reported an error. - Check the charging fan. - Contact the authorised service centre if required. - If the error has been rectified, acknowledge the error on the display-operating unit.
	Unsent data will be overwritten !	If the truck is equipped with this variant, data transmission must be carried out. - See the associated instructions.
	Emergency off active	If the truck is switched on and an operating device is actuated when the emergency off switch is pressed, this message appears. The desired action is only possible once the emergency off switch is unlocked. - Unlock the emergency off switch.
	Emergency mode !	If the truck experiences a power reduction, for example due to a battery charge state that is too low, this message appears. - Observe the previous message.
	Emerg. direct. via drive direction lever ⚠	The drive direction switch on the hydraulic operating device has failed. Emergency driving is possible; to do so: - Move the drive direction selection lever on the travel direction selector and indicator module to the desired direction of travel and hold the drive direction selection lever in position. - Drive the truck to a safe area and park it securely. - Contact your authorised service centre.
	Emerg. direct. via drive direction switch ⚠	The drive direction switch on the travel direction selector and indicator module has failed. Emergency driving is possible; to do so: - Set the drive direction switch on the hydraulic operating device to the desired direction of travel and hold the drive direction switch in position. - Drive the truck to a safe area and park it securely. - Contact your authorised service centre.

Code	Shown in display	Cause/action
V7001 V7062	On-board charger power reduction - service required ⚠	There is a fault with the charging program. The charging process is performed with reduced power. - Contact your authorised service centre.
	Parameter calibration ⟳	This message is not displayed during normal operation. - Contact your authorised service centre.
	Seatbelt sequence !	If the configured sequence for applying the restraint systems is not observed, this message appears. - Fasten the seat belt.
	Close restraint system 🔓	If, for example, the truck is equipped with a bracket as a restraint system and the accelerator pedal is actuated, this message appears. The truck will not move. - Close the restraint system.
	Vibrating function blocked – overload ⚠	If the vibrating function (variant) is overloaded by an excessive load, this message appears. The shake function will remain unavailable as long as this situation persists.
	Switch on key switch !	If the hazard warning system (variant) is switched on when the truck is switched off, the display-operating unit remains active. Then, when a truck function is called up, this message appears. - Switch on the truck.
	Shock event detected !	If the truck control unit detects a very strong acceleration or deceleration, e.g. in the event of an accident, this message appears.
	Service required 🔧	If the maintenance interval has been reached, this message appears. - Contact your authorised service centre.
	Service mode active ⚠	This message is not displayed during normal operation. - Contact your authorised service centre.
	Close seat belt	If the seat belt is not fastened, the driving speed is limited to 4 km/h and this message appears. - Fasten the seat belt.
	Are you sure? ?	If the display-operating unit is expecting confirmation from the driver, this message appears. - Continue or cancel the input prompt.
	Software update Please wait ⟳	The on-board charger software is being updated. The update is complete when the charging process ends. - Wait until the charging process begins automatically.

Code	Shown in display	Cause/action
	Enable sprint mode !	If the battery is charged after blocking sprint mode or a normal temperature is reached, this message appears. Sprint mode can be used again once the truck has been restarted.
	Sprint mode blocked – battery	If the battery experiences under voltage or too high a temperature, this message appears. Sprint mode is no longer available. - Observe the previous message.
	Sprint mode blocked – temperature	If the temperature at the drive units is too high, this message appears. Sprint mode is no longer available. - Observe the previous message.
	Dead man switch	If the truck is equipped with a foot switch, and a truck function is called up when the foot switch is not actuated, this message appears. - Actuate the foot switch.
	Overload	With the "overload protection" variant, this message appears if an excessive load is picked up. - Set down the load.
	Overtemp. Drive unit !	The drive units are protected against overtemperature. If the temperature at the drive units is too high, this message appears. Acceleration and maximum speed are reduced. - Allow the truck to cool down.
	Overtemp.: Battery	If the truck control unit detects an excessive battery temperature, this message appears. - Allow the truck to cool down.
	Monitoring: Electrics	A sensor for monitoring the acid level of the battery has failed. Do not continue to use the truck with this battery. - Have any faults rectified by the authorised service centre.
	Factory mode active	This message is not displayed during normal operation. - Contact your authorised service centre.
	Access expired !	If the truck is equipped with this variant, this message might appear. - See the associated instructions.
	Access denied !	
	Access expires in < 1 month !	
	Access expires in < 1 day !	If the truck is equipped with this variant, this message might appear. - See the associated instructions.
	Access expires in < 1 week !	

Code	Shown in display	Cause/action
	Access expires in < 2 days !	
	Access expires in < 3 days !	

Messages about the truck

If messages with a code appear on the display-operating unit, the truck control unit has detected a fault. The message with a code is stored in the message list until the cause of the message is corrected. The saved messages can be called up from the "message list".

If, for example, the reflector or the lift-height sensor is contaminated, it usually helps to clean these components.

– Switch the truck off and on again.

– If the message still appears, please contact the authorised service centre.

The messages are sorted in ascending order according to their code:

Code	Shown on display	Description/possible solution
A2305	Fault: Control unit	Collective fault on the control unit
A2899	Monitoring	Collective fault of the process monitoring
A3027	Fault: Seat switch	The seat switch does not open - Stand up from the driver's seat and sit down again.
A3035	Fault: Brake fluid	Brake fluid switch
A3143	Check lift height sensor and reflector	Lift-height sensor measurement error
A5934	Re-insert charging plug	Error on the charging connector detection - Disconnect the connection assembly and reconnect it.
A5961	Battery overtemperature	Overtemperature of the lithium battery - Switch off the truck and leave it to cool down.
A5962	Battery too cold	Insufficient lithium battery temperature - Move the truck to a warmer environment.
A5986	Fault: Control unit	General battery current measurement
A5993	Fault: Internal charger	On-board charger collective fault
A6502	Overtemp.: Parking brake	Electric parking brake detects overtemperature

Code	Shown on display	Description/possible solution
A6510	`Fault: Parking brake` ⓘ	Electric parking brake detects fatal fault
A6511	`Fault: Parking brake` ⓘ	Brake cannot release
A6512	`Fault: Parking brake` ⓘ	Brake cannot apply
None	`Error` ⚠	General fault

Procedure in emergencies

Emergency shutdown

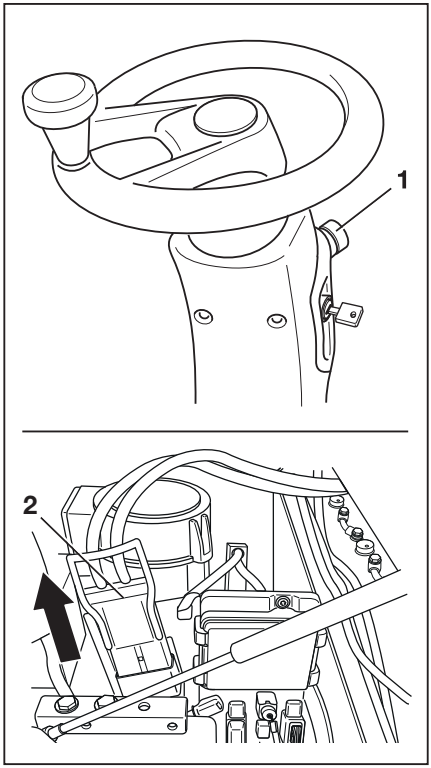

⚠ WARNING

No electric braking assistance is available when the emergency off switch is actuated!

Actuating the emergency off switch (1) will disconnect the drives from the power supply.

Disconnecting the battery male connector (2) disconnects the entire truck from the power supply.

The truck will not be held by the regenerative brake if located on a slope.

– To brake, actuate the service brake.
– Only use this safety system in an emergency or in order to park the truck safely.

⚠ CAUTION

Potential for damage to the battery male connector!

If the battery male connector is disconnected while the key switch is on (under load), an arc will be produced. This can lead to erosion at the contacts, which considerably shortens the service life of the contacts.

– Switch off the key switch before disconnecting the battery male connector.
– Do not disconnect the battery male connector while the key switch is switched on, except in an emergency.

In an emergency, all functions of the truck can be shut down:

– Press the emergency off switch (1) or disconnect the battery male connector (2).

In drive mode, pressing the emergency off switch (1) has the following effects:

- No reduction in truck speed when the accelerator pedal is released, according to the drive programme selected. The truck will coast to a stop.
- The electric brake does not function during the first part of brake pedal travel:

  To decelerate the truck with the mechanical brake, the brake pedal has to be pressed down further.
- The truck can only be held on a slope using the mechanical brake, not the electric brake.

- No power steering effect; the steering forces are increased by the remaining emergency steering function
- The "Curve Speed Control" system (automatic reduction in truck speed when cornering) does not function. Brake the truck using the service brake.
- No hydraulic functions are available.

Procedure if truck tips over

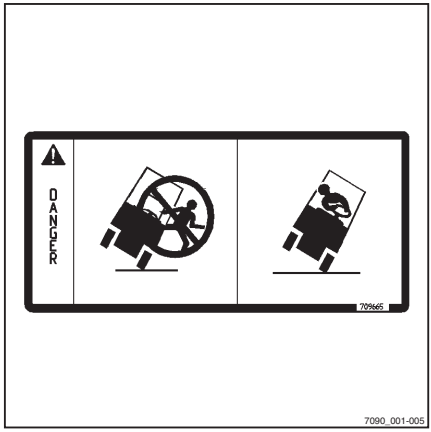

⚠ DANGER

If the truck tips over, the driver could fall out and slide under the truck with potentially fatal consequences. There is a risk to life.

Failure to comply with the limits specified in these operating instructions, e.g. driving on unacceptably steep gradients or failing to adjust speed when cornering, can cause the truck to tip over. If the truck starts to tip over, do not leave the truck under any circumstances. This increases the danger of being hit by the truck.

– Do not release your seat belt.
– Never jump off the truck.
– You must adhere to the rules of behaviour if the truck tips over.

Rules of behaviour if truck tips over:

– Hold onto the steering wheel with your hands.
– Brace your feet in the footwell.
– Bend your upper body over the steering wheel.
– Bend your body against the direction of the fall.

Emergency driving via the drive direction switch/drive direction selection lever

If the truck is equipped with two independent operating devices for the drive direction and one of these operating devices fails, the truck can be emergency driven to leave a hazardous area using the operating device.

As the truck can only be moved to a limited extent, this poses a risk of accident.

These are the possible controls for the drive direction:

- The drive direction switch on the operating device for the hydraulic functions
- The drive direction selection lever on the travel direction selector and indicator module (variant)

This emergency operation is possible in the following situations:

- The drive direction switch on the operating device for the hydraulic functions has failed.
  The message `Emerg. direct. via drive direction lever` ⚠ appears.
- The drive direction selection lever on the travel direction selector and indicator module (variant) has failed.
  The message `Emerg. direct. via drive direction switch` ⚠ appears.
- The temperature of the display-operating unit is too low.
  This status is shown in the display as follows:
  STILL ❄
- The display-operating unit has failed.

To perform emergency driving, proceed as follows:

– Sit on the driver's seat.

– Fasten the seat belt.

– Release the parking brake.

– Push the drive direction switch/drive direction selection lever in the desired drive direction.

– Press the accelerator pedal.

– Drive the truck to a safe area and park the truck safely.

– If the error occurs frequently, contact the authorised service centre.

Emergency lowering

If the hydraulic controller fails whilst a load is raised, emergency lowering can be performed. An emergency lowering screw designed for this purpose is located on the valve block.

⚠ DANGER

There is a risk to life from falling loads or from truck components being lowered.

– Do not walk beneath the raised load.
– Adhere to the steps detailed below.

NOTE

The hexagon socket wrench that is used to remove the valve cover is also used for emergency lowering.

– Apply the parking brake and switch off the truck.
– Remove the hexagon socket wrench (1) from the cover to the right of the driver's seat. ▷

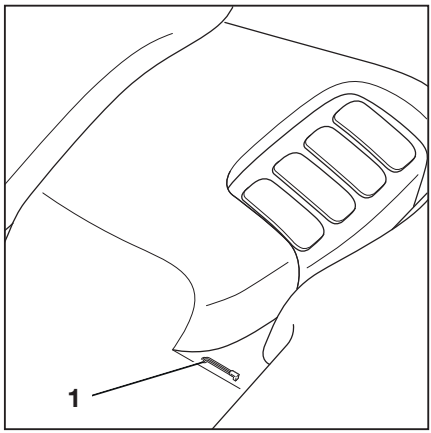

– Loosen the three screws (3) on the panelling (2) and remove the panelling (2).

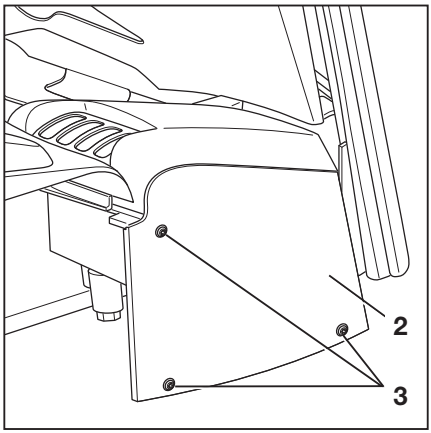

– Remove the three screws on the valve block cover and remove the valve block cover.

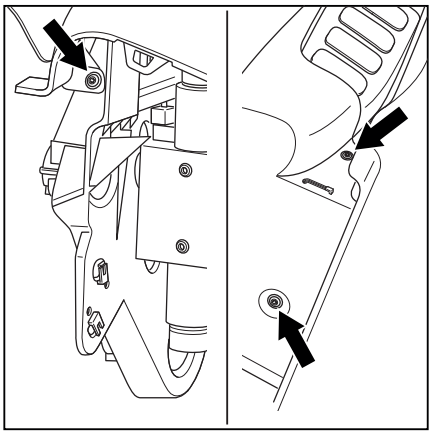

NOTE

Depending on the operating device for the hydraulic functions, the truck is equipped with different valve blocks.

– Using the hexagon socket wrench, turn the emergency lowering screw (4) a maximum of 1.5 revolutions to loosen it.

A Proportional-valve technology
For mini-lever, Fingertip and Joystick 4Plus operation

B Mechanical valve technology
In multi-lever operation

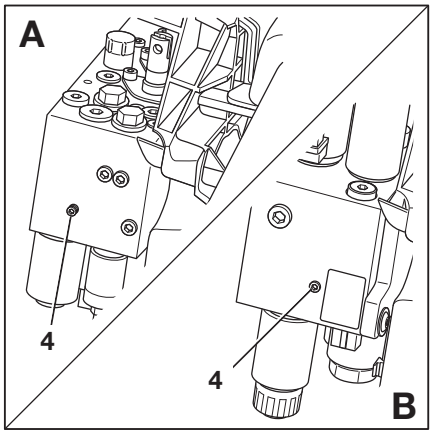

⚠ WARNING

The load is lowered!

Unscrewing the emergency lowering screw regulates the lowering speed.

– Observe the list of points below.

The following applies:

- Unscrewing the emergency lowering screw slightly:
  The load is lowered slowly.
- Unscrewing the emergency lowering screw further:
  The load is lowered quickly.

After lowering:

– Re-tighten the emergency lowering screw. Tightening torque: max. 2.5 Nm

– Fit the valve block cover.

– Stow the hexagon socket wrench safely in the support mounting next to the lever cover.

⚠ DANGER

If the truck is operated while the hydraulic controller is blocked, there is an increased risk of accidents.

– After the emergency lowering procedure, have the malfunction rectified.

– Notify the authorised service centre.

Towing

Safety information

⚠ DANGER

The truck could drive into the towing vehicle when the towing vehicle brakes. Risk of accident!

For safety reasons, a person authorised to drive must steer and brake the truck. It must be ensured that either the service brake or the parking brake is working.

– If both brake systems do not work, call the authorised service centre.

– Use a tested tow bar with sufficient pulling force.

– Select a towing speed that allows the towed truck and towing vehicle to be safely braked and controlled at all times.

⚠ CAUTION

If the truck drive between the drive motor and the drive axle is not interrupted, the drive may be damaged.

– Set the drive direction switch to the neutral position.

⚠ CAUTION

Potential for damage to the battery male connector!

If the battery male connector is disconnected while the key switch is on (under load), an arc will be produced. This can lead to erosion at the contacts, which considerably shortens the service life of the contacts.

– Switch off the key switch before disconnecting the battery male connector.

– Do not disconnect the battery male connector while the key switch is switched on, except in an emergency.

⚠ DANGER

There is a risk of fatal injury during manoeuvring!

People can be crushed between the truck and towing vehicle during manoeuvring.

In order to make the driver of the towing vehicle and the fitter attaching the tow bar aware of the hazards, a third person must coordinate the manoeuvring of the towing vehicle and the attachment of the tow bar as a guide.

– Only manoeuvre with a guide.

⚠ WARNING

Risk of accident due to unguided truck!

If the towed truck is not steered, the truck may veer out in an uncontrolled manner.

The truck being towed must also be steered and braked by a driver.

The driver of the truck being towed must sit in the driver's seat and fasten the seat belt before towing.

– Use the available restraint systems.

Procedure

A tow bar is required for towing. The tow bar must have sufficient pulling force for the weight of the truck. The tow bar must be attached to an eye bolt for screwing into the counterweight.

– Set down the load and lower the fork arms close to the ground.

– Place the drive direction switch in the neutral position.

– Apply the parking brake.

– Switch off the key switch.

– Open the battery hood.

– Disconnect the battery male connector.

– Unscrew the eye bolt (1) from the stowed position on the right-hand side. ▷

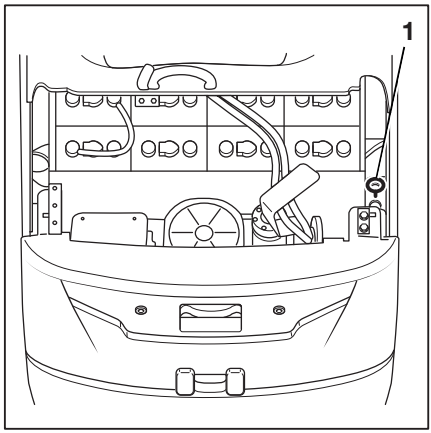

– Close the battery hood again.

- Screw the eye bolt (1) to the rear weight to the stop.
- Check the pulling and braking forces of the towing vehicle.
- With the help of a guide, move the towing vehicle behind the counterweight of the truck.
- Secure the tow bar to the towing vehicle and to the eye bolt (1).
- Sit in the driver's seat in the truck being towed. Fasten the seat belt.
- Use the available restraint systems.
- Release the parking brake.
- The driver of the towing vehicle must select the towing speed so that the towing vehicle and truck can be braked and controlled at all times.
- After towing, park the truck securely and switch it off.
- Secure the truck against rolling away, e.g. apply the parking brake or place wheel chocks under the wheels.
- Remove the tow bar.
- Open the battery hood.
- Unscrew the eye bolt (1) from the counterweight and screw it back into the stowed position.
- If necessary, reconnect the battery male connector.
- Close the battery hood again.

▷

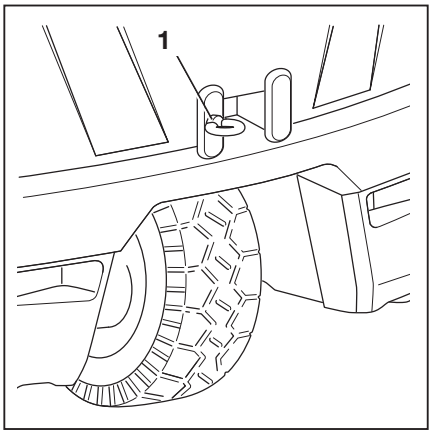

Access to the battery compartment and battery male connector

Opening and closing the battery door (variant)

Opening

– Press the battery door release button (1) and open the battery door forwards.

The battery door is held in the open position by a spring mechanism and an end position latch.

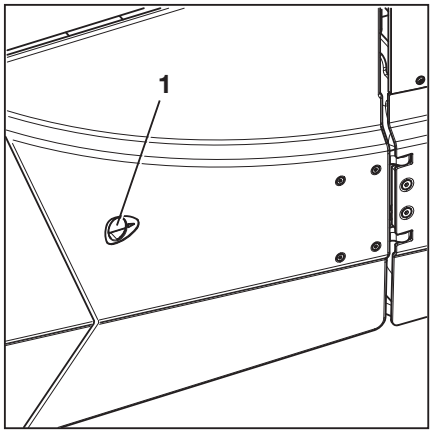

Closing

DANGER

Risk of fatal injury from the battery sliding out!

If the battery door is not locked and the truck tips over, the battery may fall out and hit the driver!

– Ensure that the battery door is securely shut.

– Drive the truck only when the battery door is locked.

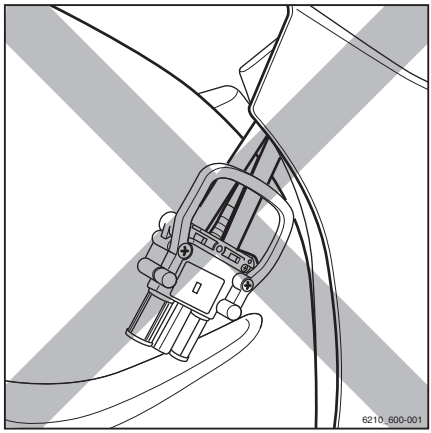

WARNING

Risk of crushing when closing the battery door!

When closing the battery door, parts of the body could become trapped.

When closing the battery door, nothing should come between the battery door and the edge of the chassis.

– Carefully close the battery door.

– Only close the battery door if there are no parts of the body in the way.

⚠ WARNING

Risk of accident due to the battery door opening!

An unlocked battery door may open if the truck decelerates sharply. If the battery door opens while driving, there is risk of damage from a collision.

– Ensure that the battery door is securely shut.
– Drive the truck only when the battery door is locked.

⚠ CAUTION

Risk of crushing the battery cable possible.

When closing the battery door, the battery cable could become trapped. There is risk of short circuit due to the battery cable being crushed or sheared off!

– Carefully close the battery door.
– Only close the battery door if the battery cable is not in the way.

– Close the battery door.
– Latch the battery door securely into the engaged position.
– Ensure that the battery door is securely shut.

NOTE

The apertures in the door are necessary for forced ventilation and must not be blocked.

Opening and closing the battery hood

Opening

⚠ WARNING

Risk of crushing due to falling battery hood!

The battery hood is equipped with a gas spring which holds the battery hood in the open position unless there is any other load on it, e.g. heavy objects, strong wind or other persons. During opening, there must be no objects on the battery hood that are not part of the truck equipment.

– Remove loose objects from the battery hood before opening.
– Make sure that the battery hood is not being pushed down by strong winds or other persons.

⚠ WARNING

Risk of burns due to hot components!

Components become very hot during use.

- Do **not** touch components except as described in this paragraph.
- Wear safety gloves.

- Position the driver's seat as far back as it can go.
- Push the armrest as far back as it will go and down to the lowest position.
- Stand behind the truck and grasp the handle (2) with your right hand.
- Push the locking lever (1) to the left with your thumb. ▷
- Lift the battery hood (3) using the handle (2) and bring it forwards.

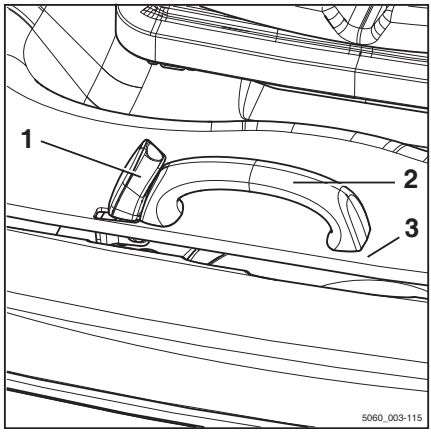

The battery hood (3) is held open by two gas springs.

Closing

⚠ DANGER

Risk of fatal injury from the battery sliding out!

If the battery hood is not locked and the truck tips over, the battery may slide out of position and fall on the driver.

- Ensure that the battery hood is shut securely.
- Drive the truck only when the battery hood is locked.

⚠ WARNING

Risk of accident due to the battery hood opening!

In the event of sharp deceleration, an unlocked battery hood may swing open towards the seat and driver, injuring the driver.

- Ensure that the battery hood is shut securely.
- Drive the truck only when the battery hood is locked.

Access to the battery compartment and battery male connector

⚠ CAUTION

Risk of crushing the battery cable possible.

When closing the battery hood, the battery cable could become trapped. There is risk of short circuit due to the battery cable being crushed or sheared off!

- Before closing the battery hood, place the battery cable under the bracket.
- Carefully close the battery hood.
- Only close the battery hood if the battery cable is not in the way.

To secure the battery cable (6), the truck is equipped with a bracket (7). ▷

- Before closing the battery hood (3), place the battery cable (6) under the bracket (7).

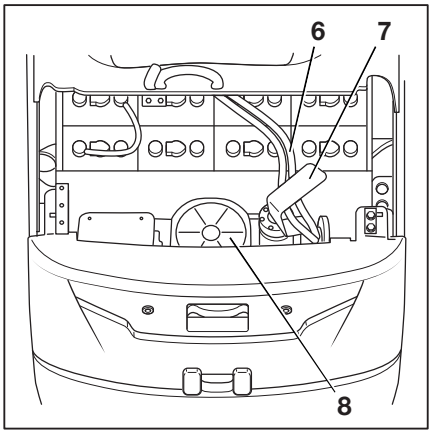

⚠ WARNING

Risk of burns due to hot components!

The traction motor (8) becomes very hot during use.

- Do **not** touch the traction motor (8).

- Push down and close the battery hood (3) using the handle (2). ▷
- Ensure that the locking lever (1) has engaged.

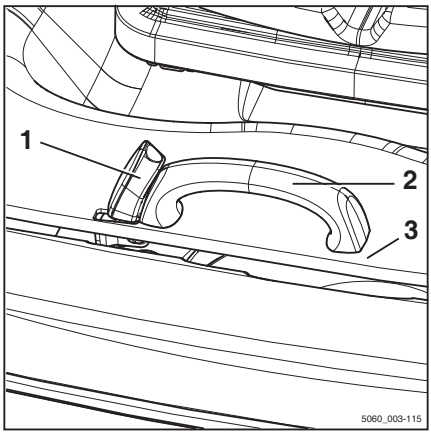

NOTE

The aperture running around the hood is used for forced ventilation and must not be closed.

Connecting the battery male connector

– Open the battery hood.

⚠ CAUTION

Risk of damage to the battery male connector!

If the battery male connector is connected while the key switch is switched on (under load), a jump spark will be produced. This jump spark can damage the contacts and considerably shorten the service life of the contacts.

– Do not connect the battery male connector with the key switch switched on.
– Make sure that the key switch is switched off before connecting the battery male connector.

– Ensure that the battery male connector and the plug connection are dry, clean and free of foreign objects.
– Insert the battery male connector (4) fully into the plug connection on the truck. ▷

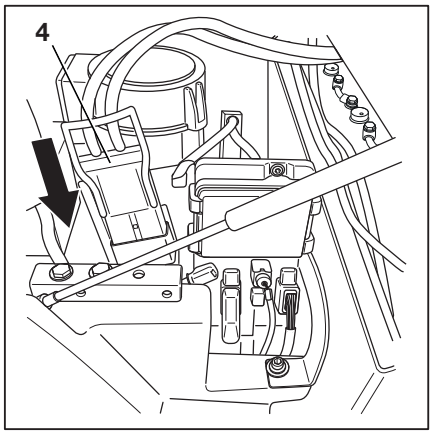

⚠ CAUTION

Risk of crushing the battery cable possible.

When closing the battery hood, the battery cable could become trapped. There is risk of short circuit due to the battery cable being crushed or sheared off!

– Before closing the battery hood, place the battery cable under the bracket.
– Carefully close the battery hood.
– Only close the battery hood if the battery cable is not in the way.

– Before closing the battery hood, place the battery cable (8) under the bracket (7).

– Close the battery hood.

▷

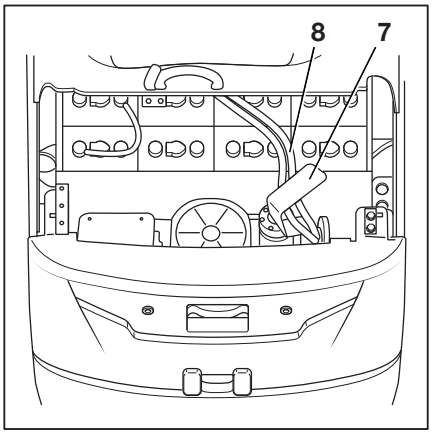

Disconnecting the battery male connector

⚠ CAUTION

Risk of damage to the battery male connector!

If the battery male connector is disconnected while the key switch is switched on (under load), a jump spark will be produced. This jump spark can damage the contacts and considerably shorten the service life of the contacts.

– Switch off the key switch before disconnecting the battery male connector.

– Do not disconnect the battery male connector while the key switch is switched on, except in an emergency.

– Open the battery hood.

– Pull the battery cable (8) out from under the bracket (7) and expose it. ▷

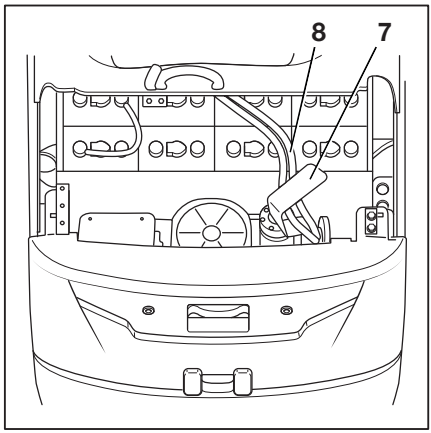

– Disconnect the battery male connector (4) from the plug connection by pulling in the direction of the arrow. ▷

– Place the battery male connector on the battery.

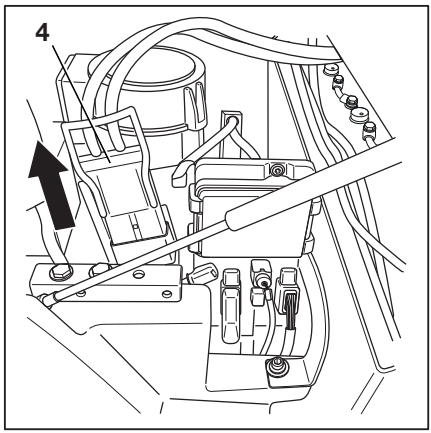

⚠ CAUTION

There is a risk of short circuit if cables are damaged.

Position the battery cable on the battery such that the cable cannot be crushed either when removing or inserting the battery, or when closing the battery hood.

– Check the connection cable for damage.

– Ensure that the battery cable does not collide with the battery hood.

– Do **not** place the battery cable on the catch bolt of the battery hood.

– Close the battery hood.

Quick charge access

Quick charge access (variant)

The charging quick-access (variant) is an additional charger socket behind a lid on the left-hand side panel. This charger socket enables charging of lead-acid batteries and lithium-ion batteries without having to open the battery hood. Charging is no faster with this charge access than with conventional charging via the plug connection on the battery.

If the truck is supplied with a lithium-ion battery, the truck is equipped with the quick charge access. The lithium-ion battery is charged only via the quick charge access.

NOTE

Lithium-ion batteries for trucks with quick charge access are delivered from the factory with shorter battery cables for design reasons. Please note the following:

- *These lithium-ion batteries may be used only in trucks with charging quick-access.*
- *Lithium-ion batteries for trucks without charging quick-access cannot be used in trucks with charging quick-access.*

– If you have any questions relating to converting existing batteries, contact the authorised service centre.

– Depending on the truck equipment, observe the section entitled "Charging the lead-acid battery" in the "Handling the lead-acid battery" chapter, the section entitled "Charging the lithium-ion battery" in the "Handling the lithium-ion battery" chapter or the section entitled "Handling the gel battery".

– Observe and follow the following safety information.

Safety information

⚠ DANGER

Risk of explosion due to flammable gases!

During charging, the lead-acid batteries release a mixture of oxygen and hydrogen (oxyhydrogen gas). This gas mixture is explosive and must not be ignited.

There must be no flammable materials or spark-forming operating materials within 2 m of either the truck when it is parked for charging or the battery charger.

– When working with batteries, take the following safety precautions.

– Keep away from open flames and do not smoke.
– Ensure that work areas are adequately ventilated.
– Disconnect the battery male connector before charging and only when the truck and battery charger are switched off.
– Expose the surfaces of the battery cells.
– Do not place any metal objects on the battery.
– Open any protective structures fully.
– Have fire extinguishing equipment ready.

⚠ DANGER

Risk of fire due to overheated connection assemblies!

Plugs that are not fully plugged in can produce excessive heat. They pose a fire hazard.

– Always fully plug the mains plug and the truck plug for the charging cable into the relevant socket.

⚠ DANGER

Risk of fire due to overheated connection assembly!

Do not pull out the mains plug under load as this will result in excessive wear and pose a fire hazard.

– If the mains plug needs be pulled out before the end of the charging process, cancel the charging process at the battery charger first.

⚠ DANGER

Risk of explosion from connecting and disconnecting connection assemblies!

Even when the truck and the battery charger are switched off, oxyhydrogen gas in the vicinity can explode if connection assemblies are connected or disconnected.

– Ventilate the charging area sufficiently.

⚠ CAUTION

Component damage due to excessive charging currents.

If the truck is equipped with quick charge access and external battery chargers are used, defined charging currents must **not** be exceeded:

300 A for lead-acid batteries

375 A for lithium-ion batteries

– Limit the charging current according to the installed battery.

⚠ CAUTION

Possible component damage.

Make sure that the charging cable does not cross any traffic routes. Do not route the charging cable over sharp edges.

General

NOTE

To ensure maximum battery life, always charge lead-acid batteries fully. Observe the maximum charging current limitation for external battery chargers for quick charge access. For intermediate charging during work breaks, use an air agitation pump (variant). Lithium-ion batteries may be charged intermediately as often as required with no restriction to the battery life.

– Park the truck securely on a flat surface near the battery charger.

Four operating situations are possible for charging with charging quick-access:

1 Lead-acid battery with truck switched off
2 Lead-acid battery with truck switched on
3 Lithium-ion battery with truck switched off
4 Lithium-ion battery with truck switched on

Opening the lid

– Gently press in the lid (2) and release it.

The lid (2) is partially opened by a spring.

– Then open the lid (2) completely by hand and hold it.

The lid (2) is secured against unintentional opening by a spring.

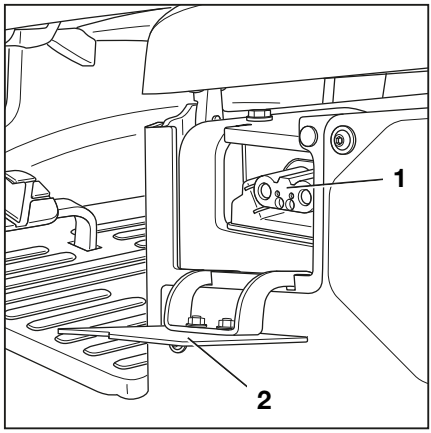

Closing the lid

When the charging cable is disconnected from the charging quick-access (1), the lid (2) closes automatically by spring pull.

NOTE

The lid is monitored by a sensor. If the lid is not completely closed, the truck cannot be switched on again.

1. Lead-acid battery with truck switched off

– Connect the charging cable to the charging quick-access (1).

Battery charging takes place. The display-operating unit shows nothing.

– When the charging process is complete, disconnect the charging cable from the charging quick-access (1).

2. Lead-acid battery with truck switched on

The parking brake is applied automatically or a message appears in the display of the display-operating unit prompting the driver to apply the parking brake.

– Connect the charging cable to the charging quick-access (1).

The truck goes into the charging state. The drives are de-energised.

Battery charging takes place. The screen on the display-operating unit goes dark.

– When the charging process is complete, disconnect the charging cable from the charging quick-access (1).

3. Lithium-ion battery with truck switched off

– Connect the charging cable to the charging quick-access (1).

Battery charging takes place. The display-operating unit shows the charging state display (3).

– When the charging process is complete, disconnect the charging cable from the charging quick-access (1).

4. Lithium-ion battery with truck switched on

– Connect the charging cable to the charging quick-access (1).

The truck goes into the charging state. The drives are de-energised.

Battery charging takes place. The display-operating unit shows the charging state display (3).

– When the charging process is complete, disconnect the charging cable from the charging quick-access (1).

Charging state display in the display-operating unit for lithium-ion batteries

When charging lithium-ion batteries, the charging state display (3) appears in the display-operating unit.

If the charging state display (3) does not appear, there is an error. The charging quick-access (1) may not recognise the charging cable.

– In this case, disconnect the charging cable from the charging quick-access and re-establish the connection.

If the charging process is running, the charging state display (3) is animated in green.

If the charging process is not running, the charging state display (3) flashes in grey.

▷

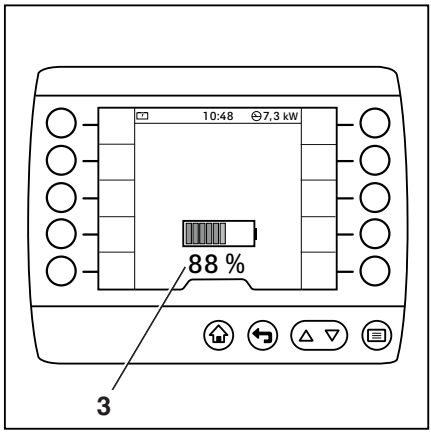

On-board charger

General information about the on-board charger (variant)

With the on-board charger (variant), there is no need to provide space for a charger on the premises, as it is installed directly in the battery tray.

This charger is designed to operate on 230 V mains sockets with a protective contact and a 16 A fuse. The socket must meet the following requirements and undergo regular, professional testing:

- Fuse protection rated at 16 A (characteristic B, C, K or equal thereto)
- Fault-current circuit breaker for AC and DC fault currents (RCD-type A), 30 mA
- Protective conductor

NOTE

The on-board charger can only be used in combination with approved lithium-ion batteries in battery tray 107. All messages for the on-board charger are listed in the section entitled "Messages about operation" in the "Display messages" chapter.

Conditions for the operation of the on-board charger

The on-board charger may only be used to charge lithium-ion batteries that are located in the same truck as the charger and are connected to the truck.

The housing of the on-board charger must not be opened, as the high voltages inside pose a risk to life. Any breach shall invalidate the warranty.

Mains cable

The mains cable of the on-board charger is wound up in a storage container (1). This storage container (1) is marked with a lightning symbol indicating "Danger of electric shock" and is located under the battery hood.

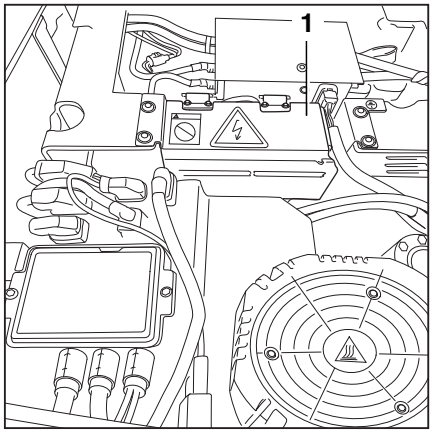

Only use the permanently attached mains cable (2).

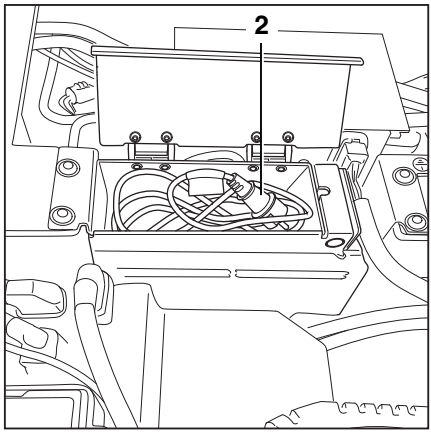

When using the mains cable (2), follow these instructions:

- Before using the mains cable (2), check the mains plug and mains sockets for damage.
- If any damage is found, do not use the affected components (this applies to the mains cable (2) and mains sockets).
- Route the mains cable (2) without strong mechanical load, e.g. strain.
- Protect the mains cable (2) from mechanical loads.
- Do not route the cable (2) strained or over sharp edges.
- Do not route the mains cable (2) across traffic routes.

Changing the battery type used

⚠ DANGER

Risk of fire and explosion!

If the battery charger has not been configured for the battery type used and, for example, an excessively high battery capacity has been set, this may result in excessive heating and significant gas emissions. Oxyhydrogen gas and sulphur compounds form as a result.

– Observe the following conditions, which may mean that a reconfiguration of the battery charger is required.

The on-board charger must be configured for the battery type used. When changing the battery type used, fleet manager access authorisation (variant) allows the fleet manager to reconfigure the battery charger if necessary.

⚠ CAUTION

Do not use the on-board charger for lead-acid batteries.

The on-board charger is only intended for batteries in battery tray 107.

– Only use intact lithium-ion batteries approved by STILL.

– Refer to the section entitled "Changing to a different battery type" in the chapter entitled "Replacing and transporting the battery".

Configuring the on-board charger

The on-board charger must be configured for the battery type used. Fleet manager access authorisation (variant) allows the fleet manager to do this.

NOTE

The configuration process requires access authorisation for the fleet manager. Access to the settings menu is only available if the truck is at a standstill and the parking brake is applied. If the parking brake is released prematurely, the settings menu will close.

– Apply the parking brake.

– Press the button.

– Activate the "Access authorisation for the fleet manager".

– Press the softkey.

– Press the `Truck settings` softkey.

– Press the `On-board charger` softkey.

`On-board charger` menu ▷

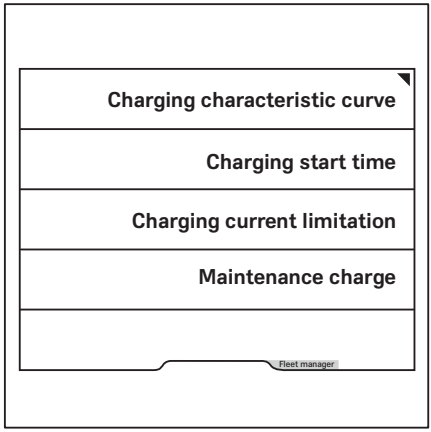

The following functions can be configured or switched on:

- `Charging characteristic curve`
- `Charging start time`
- `Charging current limitation`
- `Maintenance charge`

Charging characteristic curve

– Push the `Charging characteristic curve` softkey.

The possible charging characteristic curves are displayed. ▷

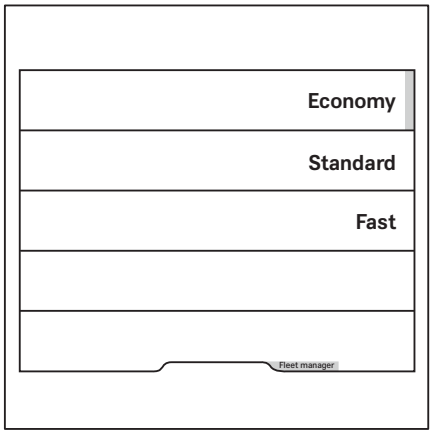

The orange activation bar displays the current selection.

– Push the softkey that corresponds to the selection.

The display reverts to the `On-board charger` menu.

Charging start time

– Press the `Charging start time` softkey.

`Charging start time` menu ▷

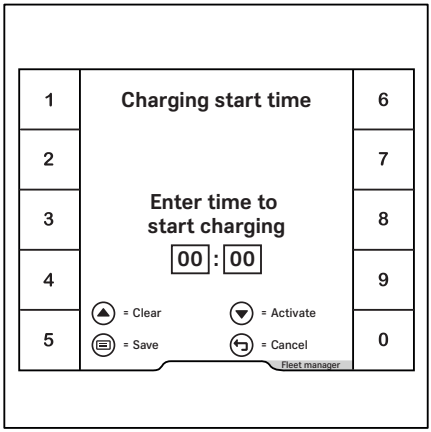

– Enter the charging start time using softkeys `0` to`9`.

– To `save`, press the ☰ button.

– To activate the charging start time, press the scroll button ▽.

The display reverts to the `On-board charger` menu.

If a charging start time has been defined, an orange activation bar lights up next to the `Charging start time` softkey.

If the charging plug is plugged in outside the specified charging start time, a charging state indicator (2) appears in grey. Battery charging does not take place. ▷

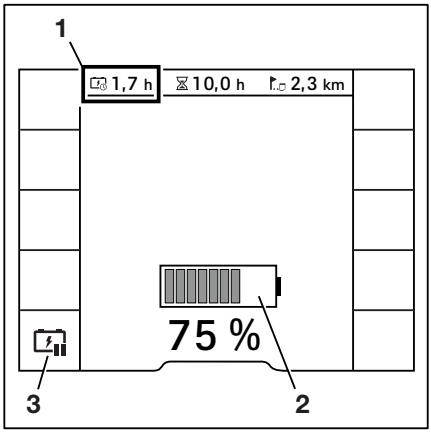

The time remaining (1) until the specified charging start time is displayed in the top-left. The softkey allows you to start charging directly.

– To do so, press the (3) softkey.

The symbol changes to (3). The orange activation bar lights up next to the softkey.

The charging state indicator (2) is animated in green. Battery charging takes place.

The remaining charging time (1) is displayed in the top-left.

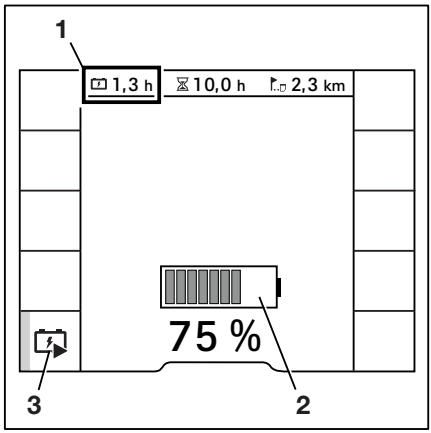

Charging current limitation

Charging current limitation is required under the following conditions:

- Insufficiently powerful in-house network
- Power supply is provided via multiple-socket outlets

– Press the `Charging current limitation` softkey.

`Charging current limitation` menu

– Enter the charging current as a percentage (1) using softkeys `0` to `9`.

The charging current is displayed under the input window in amperes (2).

– To `save`, press the button.

The display reverts to the `On-board charger` menu.

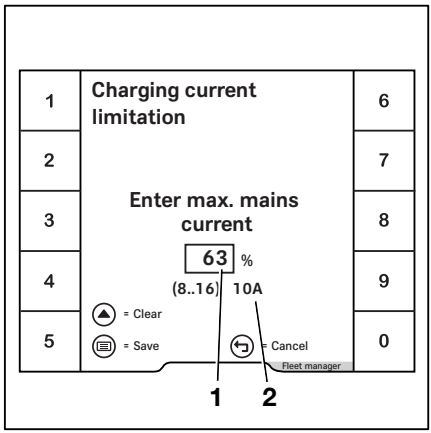

Maintenance charge

If the truck remains stationary over a prolonged period and maintenance charge is

active, the on-board charger checks the charging state of the battery from time to time and charges it if necessary.

– Press the `Maintenance charge` softkey.

If the maintenance charge is active, the orange activation bar lights up next to the softkey.

– To deactivate the maintenance charge, push the softkey again.

The orange activation bar goes out.

Charging the battery

Safety information

⚠ DANGER

Risk of explosion due to flammable gases!

During charging, the battery releases a mixture of oxygen and hydrogen (oxyhydrogen gas). This gas mixture is explosive and must not be ignited.

There must be no flammable materials or spark-forming operating materials within 2 m of either the truck when it is parked for charging or the battery charger.

– When working with batteries, take the following safety precautions.

– Keep away from open flames and do not smoke.

– Ensure that work areas are adequately ventilated.

– Disconnect the battery male connector before charging and only when the truck and battery charger are switched off.

– Expose the surfaces of the battery cells.

– Do not place any metal objects on the battery.

– Fully open any protective structures (e.g. fabric-covered cab).

– Have fire extinguishing equipment ready.

⚠ DANGER

Risk of explosion due to static charge!

If the driver is electrostatically charged, touching the battery may produce sparks. These sparks can ignite oxyhydrogen gas that has formed.

– To dissipate a possible electrostatic charge, touch an earthed component that is situated a long way from the battery.

⚠ DANGER

Risk of fire due to overheated connection assemblies!

Plugs that are not fully plugged in can produce excessive heat. They pose a fire hazard.

– Always fully plug the mains plug and the truck plug for the mains cable into the relevant socket.

⚠ DANGER

Risk of fire due to overheated connection assembly!

Do not pull out the mains plug under load as this will result in excessive wear and pose a fire hazard.

– If the mains plug needs be pulled out before the end of the charging process, cancel the charging process manually first (see the section entitled "Stopping the charging process manually").

⚠ DANGER

Risk of explosion due to spark discharge!

If the mains plug is plugged in, sparks may occur. These sparks can ignite any oxyhydrogen gas present in the battery compartment.

– Do not plug in the mains plug unless the battery compartment of the truck and the charging area have been sufficiently ventilated.

DANGER

Risk of fire due to arcs!

If the mains plug is disconnected during the charging process (under load), an arc will be produced. This can lead to erosion at the contacts, which considerably shortens the service life of the contacts and poses a fire hazard. The truck electronics can also be damaged by the excess voltage that arises.

– If the mains plug needs to be pulled out before the end of the charging process, cancel the charging process manually first (see the section entitled "Stopping the charging process manually").

DANGER

Risk of fire from connecting and disconnecting connection assemblies!

Even when the truck and the battery charger are switched off, oxyhydrogen gas in the vicinity can explode if connection assemblies are connected or disconnected.

– Sufficiently ventilate the battery compartment of the truck and the charging area.

CAUTION

Possible component damage.

Make sure that the mains cable does not cross any traffic routes. Do not route the charging cable over sharp edges.

Procedure

NOTE

To ensure maximum battery life, always charge lead-acid batteries fully. For intermediate charging during work breaks, use an electrolyte circulation pump (variant). Lithium-ion batteries may be charged intermediately as often as required with no restriction to the battery life.

– Park the truck securely on a level surface near a suitable mains socket (3) with protective contact and switch off the truck.

– Open the battery hood. See the section entitled "Opening and closing the battery

hood" in the chapter "Access to the battery compartment and battery male connector".

– Open the cover of the storage container (1). ▷
– Take out the mains cable (2).
– Unwind the mains cable (2).

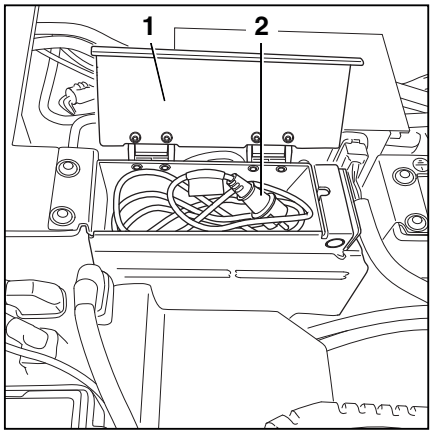

– Plug the mains cable (2) (3) into a suitable mains socket with a protective contact. ▷

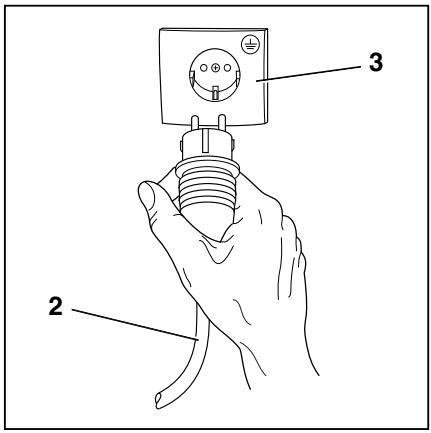

NOTE

Requirements for the mains socket:

- *Fuse protection rated at 16 A (characteristic B, C, K or equivalent)*
- *Fault-current circuit breaker for AC and DC fault currents (RCD-type A), 30 mA*
- *Protective conductor*

DANGER

Risk of explosion due to formation of oxyhydrogen gas!

Oxyhydrogen gas can accumulate in the battery compartment. The battery hood ensures that the battery compartment is ventilated.

– Route the mains cable (2) without strain. ▷

– Make sure that the cover of the storage container (1) remains open.

– Lower the battery hood and put it on.

⚠ CAUTION

Risk of crushing!

Do not route the mains cable near the catch bolt of the battery hood.

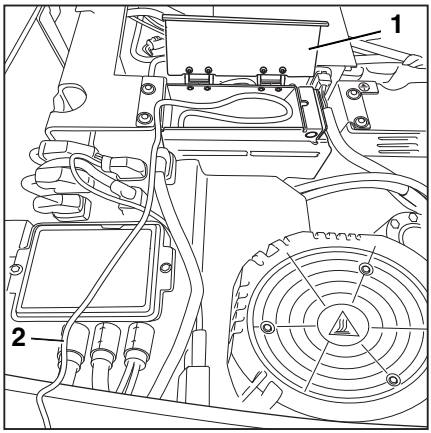

– Route the mains cable (2) through the wide gap between the battery hood (5) and the counterweight (6) to avoid crushing when the battery hood (5) is closed. ▷

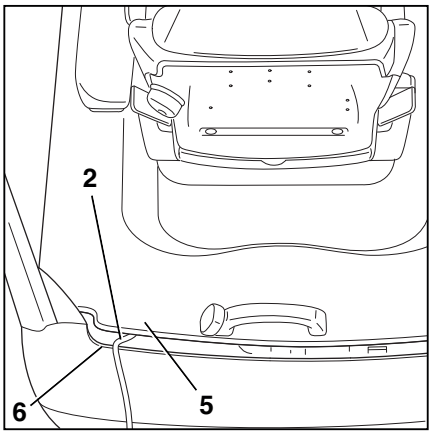

– Alternatively, route the mains cable (2) to the side between the battery hood (5) and the frame (7).

▷

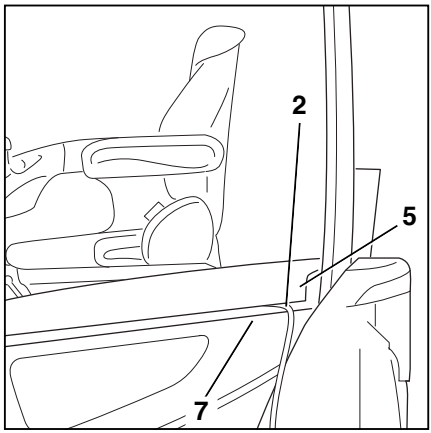

After a self-test, the battery charger automatically begins the charging process.

At the same time, the charging state display (8) appears on the display-operating unit.

If the charging state display (8) does not appear, there is a fault.

– In this case, disconnect the power supply and reconnect it.

If the charging process is running, the charging state display (8) is animated in green.

If the charging process is not running, the charging state display (8) flashes in grey.

▷

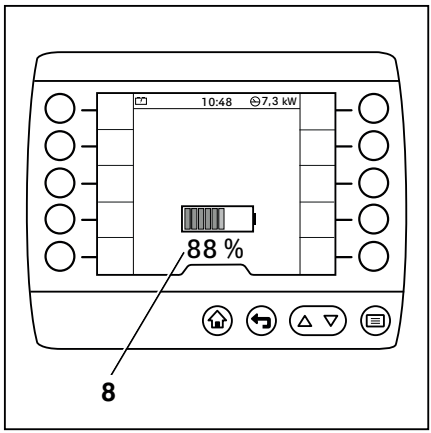

Reading the charging status from the tail lights

If desired, the charging process can also be indicated via a flashing signal emitted by the LED tail lights on the truck.

The individual LEDs in the tail lights begin to flash, go out and flash again, one after another, running from one side to the other side. This light signal is displayed over the entire duration of the charging process.

Up to a charging state of 50%, only the LEDs in the left tail light begin to flash. The fewer LEDs that flash, the lower the charging state.

As soon as the charging state exceeds 50%, the LEDs in the right tail light also begin to flash. The more LEDs that flash, the higher the charging state.

– Contact the authorised service centre regarding this matter.

Ending the charging process

When the battery is fully charged, the charger automatically stops charging. The charging state display (8) on the display-operating unit of the truck shows `100%`. Disconnect the power supply to the charger.

– Remove the mains cable (2) (3) from the mains socket.

– Wind up the mains cable (2) and put it in the storage container (1).

– Properly close the cover of the storage container (1).

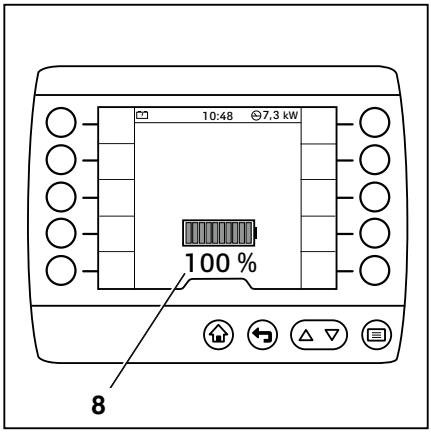

To ensure that the storage container (1) is closed, a sensor (9) is installed.

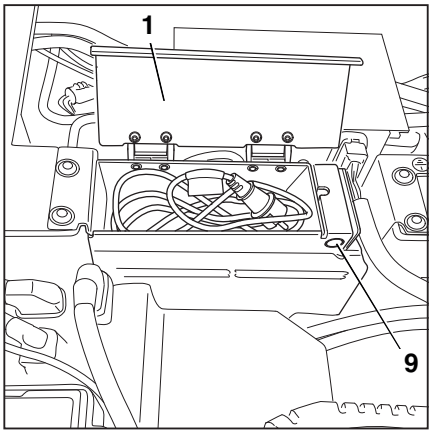

NOTE

- *Do not cover the sensor.*
- *Keep the sensor clean.*

If the storage container (1) is open, the truck will not move. The following error message appears on the display-operating unit: **"`Close charging socket lid`"**.

NOTE

The cover of the storage container must be closed, except when charging. The error message on the display-operating unit only goes out when the cover is properly closed and the truck can be moved again.

– Close the battery hood. See the section entitled "Opening and closing the battery hood" in the chapter "Access to the battery compartment and battery male connector".

It is possible to stop the charging process manually at any time. See the following section.

Stopping the charging process manually

Operation of the battery charger requires that there are no interruptions during the charging process. If the charging process has to be interrupted due to external influences or the use of the truck, the charging process can be interrupted manually. A new charging process is started automatically after the mains voltage is interrupted.

- Remove the mains cable (2) (3) from the mains socket.
- Wind up the mains cable (2) and put it in the storage container (1).
- Close the cover of the storage container (1). See "Ending the charging process".
- Make sure that the cover of the storage container (1) is properly closed. See "Ending the charging process".
- Close the battery hood. See the section entitled "Opening and closing the battery hood" in the chapter "Access to the battery compartment and battery male connector".

NOTE

During normal operation, do not stop the charging process before it is automatically switched off. Switching off charging too early results in an insufficiently charged battery. This may diminishes the battery's capacity.

NOTE

Regularly recharge the battery with the on-board charger. This can prevent possible sulphation.

Charging a deeply discharged lead-acid battery

NOTE

A defective battery may be incorrectly identified as a deeply discharged battery if, for example, a cell short circuit or another fault is present. If the charging process is started in this case, the remaining cells of the battery may be overloaded. Before the charging process is started manually, you must therefore measure all cell voltages in the battery and compare them for any irregularities. If one cell voltage is significantly lower than the others, the battery is probably defective. The charging process must not be started. In addition, the filling quantity of the acid in the cells must be checked and, if necessary, refilled according to the manufacturer's instructions. For this reason, the authorised service centre must always be notified if a battery is deeply discharged.

If the connected battery has a cell voltage in the range of 1.0 V to 1.6 V, it is considered to be deeply discharged.

The battery charger indicates this with a flashing red display after the mains plug (4) has been plugged in. The charging process does not start automatically.

To charge the battery gently, the battery charger uses a special charging characteristic. A full charge in this condition takes longer than a normal charging process. The driver must monitor the charging process at regular intervals (at least every 30 minutes). If the battery heats up to an excessive degree or emits a lot of gas (strong sulphur smell), the driver must cancel the charging process immediately. In this case, the battery is probably defective.

Cleaning

Check the on-board charger regularly for contamination.

If significant contamination has accumulated on the battery charger, cooling may be impaired.

– Remove any contamination or dust with a soft brush and vacuum cleaner.

⚠ CAUTION

Malfunctions of the charging electronics

Do not use compressed air or high-pressure cleaners for cleaning. Dust particles or water can penetrate the charging electronics and cause malfunctions.

Inspection

The authorised service centre conducts the inspection according to the maintenance instructions for the truck.

Maintenance

During maintenance, work is carried out on the charger. All actions taken are recorded in a log.

– Arrange for the authorised service centre to perform the maintenance work on the truck.

Compatible batteries

⚠ DANGER

Risk of fire and explosion!

If an unapproved or defective battery is used, this can cause overloading as well as excessive gas emissions and overheating of the battery.

– Only use intact lithium-ion batteries approved by STILL.

The on-board charger can only be used in combination with approved lithium-ion batteries in battery tray 107.

– If in doubt, contact the authorised service centre.

Technical data

On-board charger

Nominal input voltage	230 V AC
Network frequency	47.5 to 63 Hz
Maximum current draw	5.6 A

Nominal output voltage	24 V DC
Maximum charging current	50 A
Device protection class	Class 1
Protection type	IP 54 in accordance with EN 60529:2014-09
Temperature range	-35 °C to +45 °C

Handling the lead-acid battery

Safety regulations for handling the battery

– Follow the national statutory provisions for the country of use when setting up and operating battery charging stations.

⚠ CAUTION

Risk of component damage!

Incorrect connection or incorrect operation of the charging station or battery charger may result in damage to components.

– Observe the operating instructions for the charging station or battery charger and for the battery.

Maintenance personnel

Batteries may only be charged, maintained or replaced by properly trained personnel in accordance with the instructions from the manufacturers of the battery, battery charger and truck.

– Observe the handling instruction for the battery and the operating instructions for the battery charger.

– Observe the following safety regulations when maintaining, charging and changing the battery.

⚠ WARNING

Risk of crushing and shearing!

The battery is very heavy. There is a risk of serious injury if any parts of the body are caught under the battery.

There is a risk of injury if any parts of the body are wedged between the battery door and the edge of the chassis when the battery door is closed.

– Wear safety shoes when replacing the battery.

– Only close the battery door if there is no part of the body between the battery door and the edge of the chassis.

The battery must only be replaced in accordance with the directions in these operating instructions.

– When charging and maintaining the battery, observe the manufacturer's maintenance instructions for the battery and the battery charger.

Fire protection measures

⚠ DANGER

Risk of explosion due to flammable gases!

During charging, the battery releases a mixture of oxygen and hydrogen (oxyhydrogen gas). This gas mixture is explosive and must not be ignited.

There must be no flammable materials or spark-forming operating materials within 2 m of either the truck when it is parked for charging or the battery charger.

– When working with batteries, take the following safety precautions.

– Keep away from open flames and do not smoke.

– Ensure that work areas are adequately ventilated.

– Disconnect the battery male connector before charging and only when the truck and battery charger are switched off.

– The battery hood must be open when the battery is being charged.

– Expose the surfaces of the battery cells.

– Do not place any metal objects on the battery.

– Fully open any protective structures (e.g. fabric-covered cab).

– Have fire extinguishing equipment ready.

Lifting accessories

⚠ DANGER

Risk of accident!

The battery may fall from the lifting accessory. The lifting accessory may tip over or be damaged. If this happens, there is a risk to life.

The battery must be removed only when the truck is on level, even ground with sufficient load capacity. The load capacity of the lifting accessory used (see operating instructions or nameplate) must at least match the battery weight (see battery identification plate).

– Check the load capacity of the lifting accessory.

– Remove the battery on suitable ground.

Battery removal from trucks with an internal roller channel can be carried out with the following lifting accessories:

- Lift truck or truck

NOTE

The removal of batteries from trucks without their own devices must be carried out by the authorised service centre.

Battery weight and dimensions

⚠ DANGER

Risk of tipping due to change in battery weight!

The battery weight and dimensions affect the stability of the truck. When replacing the battery, the weight ratios must not be changed. The battery weight must remain within the weight range specified on the nameplate.

– Do not remove or change the position of ballast weights.

– Note the battery weight.

Battery manufacturers and battery cables

⚠ WARNING

Risk of accident as a result of failure of the energy supply!

If batteries are used that are not approved by STILL, an accident may occur due to failure of the energy supply. The cable cross-section area of the battery cables must be at least 95 mm^2 each.

- Use only batteries approved by STILL with a cable cross-section area of at least 95 mm^2.
- If in doubt, contact the authorised service centre.

Damage to cables and battery male connectors

⚠ CAUTION

There is a risk of short circuit if cables are damaged.

The battery cable must not be crushed when the battery door or battery hood is closed.

- Check the battery cable for damage.
- When removing and reinstalling the battery, ensure that the battery cables are not damaged.
- When removing and installing the battery, ensure that the battery cable does not collide with the battery door.

⚠ CAUTION

Risk of damage to the battery male connector!

If the battery male connector is disconnected or connected while the key switch is switched on or while the battery charger is under load, an arc or a transition spark will be produced at the battery male connector. This can lead to erosion at the contacts and can considerably shorten the service life of the contacts.

- Switch off the key switch or the battery charger before the battery male connector is disconnected or connected.
- Do not disconnect the battery male connector while under load, except in an emergency.

Maintaining the battery

⚠ DANGER

Danger to life and limb!

– Observe the instructions in the chapter entitled "Safety regulations when handling the battery".

⚠ WARNING

Battery acid is toxic and corrosive!

– Observe the safety regulations in the chapter entitled "Battery acid".

NOTE

Battery maintenance is carried out in accordance with the battery manufacturer's operating instructions. The operating instructions for the battery charger must also be observed. Only the instructions that came with the battery charger are valid. If any of these instructions are missing, request the relevant instructions from the dealer.

Battery maintenance consists of the following steps:

- Checking the battery condition, acid level and acid density
- Checking the battery charge state
- Charging the lead-acid battery
- Equalising charging to preserve the battery capacity

Checking the battery condition, acid level and acid density

⚠ WARNING

The electrolyte (diluted sulphuric acid) is poisonous and corrosive!

- Observe safety regulations for handling battery acid; see the chapter entitled "Battery acid".
- Wear personal protective equipment (rubber gloves, apron and protection goggles).
- Rinse away spilt battery acid immediately using plenty of water!

⚠ CAUTION

Risk of damage!

- Note the information in the operating instructions for the battery.

- Remove the battery from the truck.
- Inspect the battery for any cracks in the housing, raised plates and acid leaks.
- Have defective batteries repaired by the authorised service centre.
- Open the filler cap (1) and check the acid level. ▷

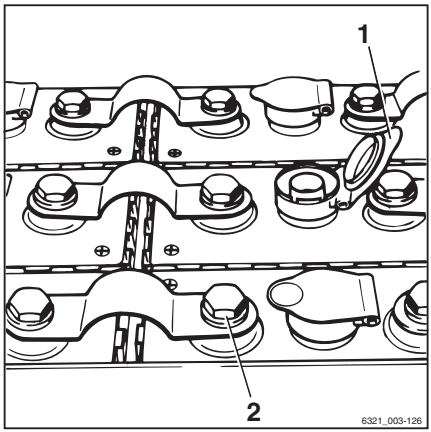

For batteries with "caged cell plugs", the liquid must reach the bottom of the cage.

For batteries without "caged cell plugs", the liquid must reach a height of approx. 10 to 15 mm above the lead plates.

- If the fluid level is too low, top up the fluid with distilled water only.
- Clean the battery cell covers and dry if necessary.
- Remove any oxidation residue on the battery terminals, then apply acid-free grease to the terminals.
- Tighten the battery-terminal clips (2) to a torque of 22–25 Nm (depending on the size of the terminal screws used).
- Check the acid density using an acidimeter.

After charging, the acid density must be between 1.28 and 1.33 kg/l.

For a discharged battery, the acid density must be **no lower** than 1.14 kg/l.

NOTE

The required acid density after charging may vary depending on the manufacturer. Observe the operating instructions of the battery used. If you have any questions, contact your authorised service centre.

Checking the battery charge state

CAUTION

Deep discharges shorten the service life of the battery.

Deep discharge begins when the battery charge display is red (3) (0% of the available battery capacity, i.e. approx. 20% of the nominal capacity).

- Deep discharge must be avoided (see the section entitled "Equalising charge to prevent a deep discharge of the battery").
- Cease work with the truck immediately.
- Charge the battery immediately.
- Do not leave batteries in a discharged or partly discharged state.

An important function of the battery charge indicator is to protect the battery from deep discharge. The battery discharge indicator shows the approximate battery charge status. The accuracy of the display increases as the battery continues to discharge.

- Apply the parking brake.
- Switch on the truck.
- Read the charge status on the display of the display-operating unit.
- Charge a discharged or partly discharged battery.

Meaning of the colours in the display ▷

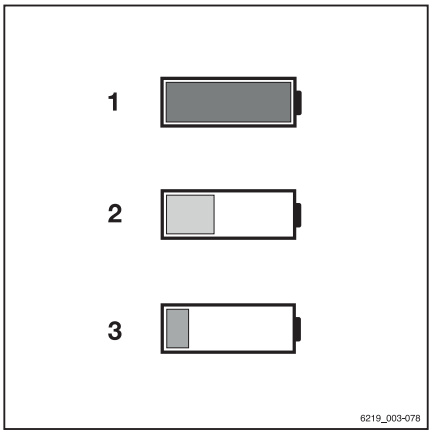

NOTE

An abrupt change in the charging state display does not indicate a malfunction. The battery charge indicator allows the driver to detect any preliminary damage to the battery. If abrupt changes in the display begin to occur more frequently, have the battery and the charging process checked by the authorised service centre.

1 Green:
The battery is sufficiently charged

2 Yellow:
Charge the battery soon.

3 Red:
Stop working. Charge the battery immediately. The battery is at risk of deep discharge.

The battery charge indicator has a protective function that prevents the displayed charging state from being affected. The charging state of a heavily discharged battery (residual charge < 30%) is not updated in the display until the battery charge indicator detects a fully charged battery.

– Never operate the batteries to the point of full discharge.

As soon as the battery charge indicator detects that the connected battery has been fully charged or a new battery has been connected, the display refreshes.

If the charging state drops to a significantly lower value immediately after the start of use, this indicates a battery problem or a charging error.

– Contact the authorised service centre if required.

Charging the lead-acid battery

⚠ DANGER

Explosive gases are generated during charging.

The oxyhydrogen gas produced during charging is usually odourless. Older batteries may have a sulphurous odour due to contamination.

– Ensure that work areas are adequately ventilated.
– Provide adequate ventilation for trucks with a fabric-covered cab.

⚠ DANGER

Risk of explosion due to old batteries!

Old and inadequately maintained batteries can cause excessive gas emissions and excessive heating during charging.

The increased production of explosive gas can lead to an explosion.

– If an increased build-up of heat or a sulphurous odour is detected, stop the charging process immediately.
– Provide good ventilation.
– Inform the authorised service centre so that it can determine the condition of the battery.

⚠ DANGER

There is a risk of damage, short circuit and explosion!

– Do not place any metal objects or tools on the battery.
– Keep away from naked flames.
– Do not smoke.

⚠ WARNING

Battery acid is toxic and corrosive!

– Observe the safety regulations in the chapter entitled "Battery acid".

⚠ CAUTION

Risk of damage to the battery charger!

Incorrect connection or incorrect operation of the charging station or the battery charger may result in damage to components.

– Follow the operating instructions for the charging station or battery charger and for the battery.

⚠ CAUTION

Potential for damage to the battery male connector!

If the battery male connector is disconnected while the truck is switched on (under load), an arc will be produced. This can lead to erosion at the contacts, which considerably shortens the service life of the contacts.

– Switch off the truck before the battery male connector is disconnected.
– Do not disconnect the battery male connector while the truck is switched on, except in an emergency.

⚠ CAUTION

Risk of damage to components.

Damage and contamination of the battery male connector or the plug on the battery charger can lead to premature wear of the counterpart.

– Before each charging process, check both sides of the connection assembly between the battery charger and the battery for damage and contamination.
– Remove contamination immediately.
– Do **not** continue to use a damaged connection assembly. Arrange for the authorised service centre to repair the connection assembly.

NOTE

STILL recommends that you always use components (plug and socket) from the same manufacturer for the connection assembly between the battery charger and the battery. The use of components from different manufacturers can cause increased wear due to the different tolerances in the shape and geometry of the components.

For information on reading the battery charge status, see the section entitled "Checking the battery charge status".

- Park the truck securely.
- Ensure that work areas are adequately ventilated.
- Make sure that the external ventilation gaps on the truck are unobstructed and are not blocked.
- Fully open any protective structures (e.g. fabric-covered cab).
- Open the battery hood.
- Do not place any metal objects or tools on the battery.
- Keep away from open flames and do not smoke.
- Check the battery cable and the charging cable for damage, and have them replaced by the authorised service centre if necessary.
- Pull the battery cable (8) out from under the bracket (7) and expose it. ▷

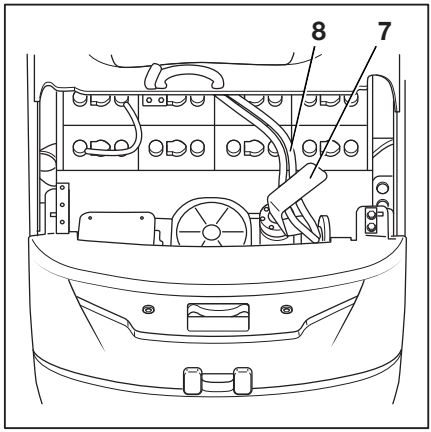

– Disconnect the battery male connector (1) by pulling the handle.

– Connect the battery male connector (1) to the plug on the battery charger.

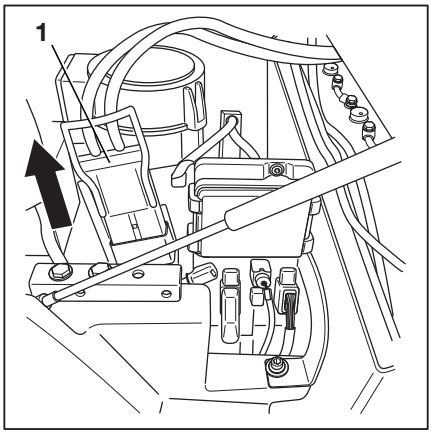

– Ensure that the battery cable (2) does **not** lie over the catch bolt (3) of the battery hood when charging.

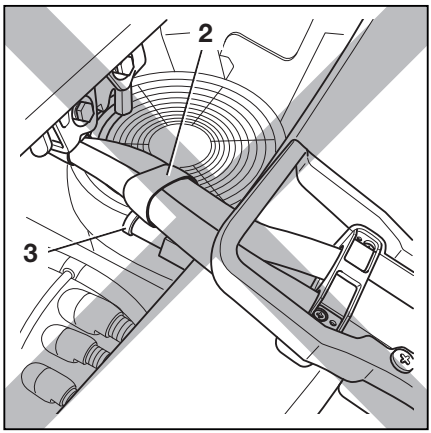

NOTE

Follow the information in the operating instructions for the battery and the battery charger (equalising charge).

– Adjust the settings of the battery charger to the battery capacity of the lead-acid battery.

– Start the battery charger.

After charging

– Switch off the battery charger.

– Disconnect the battery male connector from the plug on the battery charger.

– Insert the battery male connector (4) fully into the plug connection on the truck. ▷

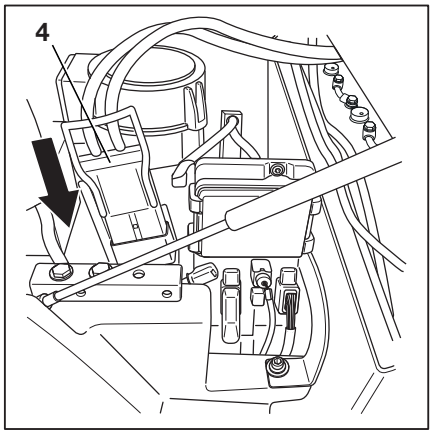

⚠ CAUTION

There is a risk of short circuit if the cables are damaged.

Do not crush the battery cable when closing the battery hood.

– Ensure that the battery cable does not come into contact with the battery hood.

– Before closing the battery hood, place the battery cable (8) under the bracket (7). ▷

– Close the battery hood. During this step, ensure that the battery cable does not become trapped between the battery hood and truck parts, e.g. chassis or counterweight.

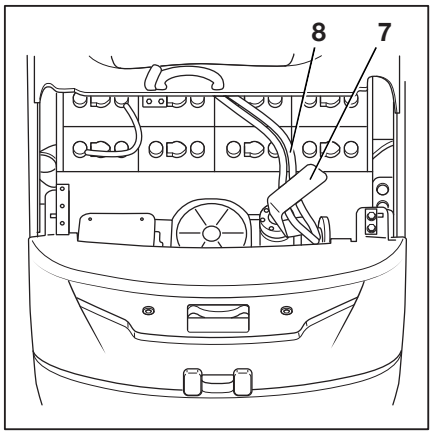

Equalising charging to preserve the battery capacity

Equalising charges ensure that unevenly charged battery cells are evenly charged again. This preserves the service life of the battery and the battery capacity.

An equalising charge should be carried out in accordance with the battery manufacturer's instructions several times a month after the normal charging process.

NOTE

Depending on the battery charger used, the equalising charge may not begin until 24 hours have elapsed. A period when no shifts are running, such as the weekend, is therefore ideal for performing the equalising charge.

– Observe the information in the operating instructions of the battery charger regarding how to perform an equalising charge.

Starting the equalising charge

– Charge the battery.

– After charging, leave the battery in the battery charger.

The battery charger remains switched on. Depending on the type of battery charger, the equalising charge begins between 6 and 24 hours after the end of the actual charging process. The equalising charge takes up to 2 hours.

– Please refer to the operating instructions from the manufacturer of the battery charger.

Ending the equalising charge

The equalising charge ends automatically. If the battery is required during this process, you can interrupt the equalising charge by pushing the "stop button" on the battery charger.

– Please refer to the operating instructions from the manufacturer of the battery charger.

⚠ CAUTION

Damage to the connection assembly is possible!

If you disconnect the charging cable while the battery charger is switched on, an arc will be produced. This can cause the contacts to erode, which considerably shortens the service life of the contacts.

– Switch off the battery charger before the charging cable is disconnected.

– Switch off the battery charger.

– Disconnect the battery male connector from the plug for the battery charger.

– Insert the battery male connector (4) fully into the plug connection on the truck. ▷

⚠ CAUTION

There is a risk of short circuit if cables are damaged.

Do not crush the battery cable when closing the battery hood.

– Ensure that the battery cable does not collide with the battery hood.

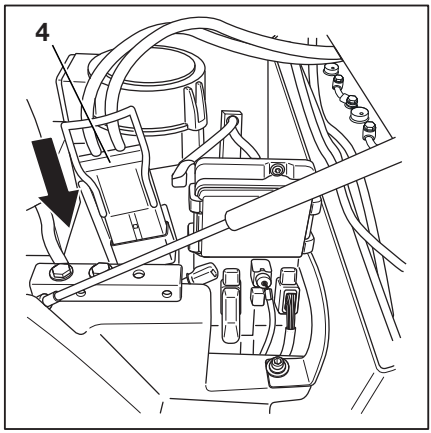

– Before closing the battery hood, place the battery cable (6) under the bracket (7). ▷

– Close the battery hood.

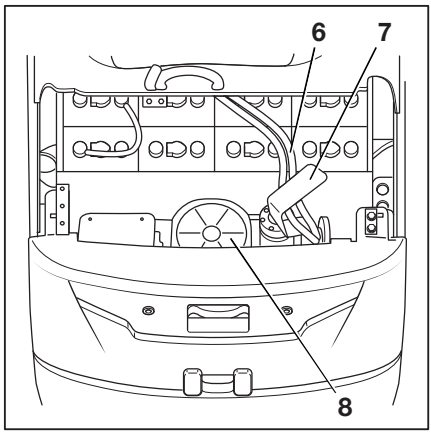

Battery maintenance indicator for lead-acid batteries (variant)

If the truck is equipped with the battery maintenance indicator (variant), the acid level of the lead-acid battery is permanently monitored via sensors.

If the acid level is too low, the message `Checking the battery acid level` appears on the display of the display-operating unit. ▷

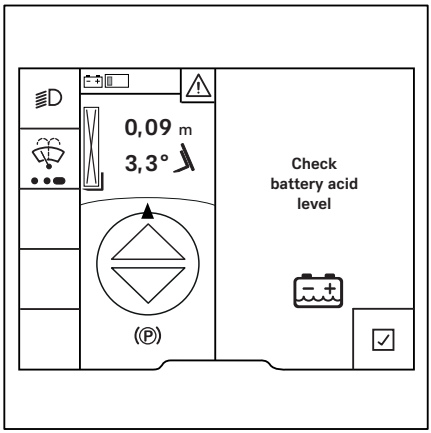

⚠ CAUTION

Risk of damage to the lead-acid battery!

If the acid level in one or more battery cells is too low, the lead-acid battery will become damaged and lose power.

– Do **not** continue to use the truck with this battery.

– Check the acid level and correct if necessary, see the section "Checking the condition, acid level and acid density of the battery" in the chapter "Handling the battery".

If a sensor fails, the message `Monitoring: Electrics` appears. ▷

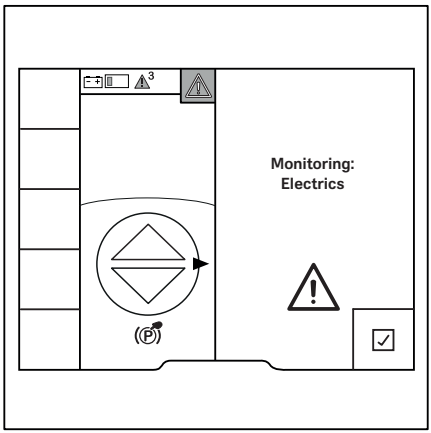

Do not continue to use the truck with this battery. The drive and hydraulic functions are deactivated.

– Park the truck securely.

– Have any defects rectified by the authorised service centre.

Handling the gel battery

General

In contrast to lead-acid batteries, gel batteries are largely maintenance-free. With gel batteries, there is no need to refill distilled water. The electrolyte is in gel form and, unlike conventional lead acid batteries, is non-liquid. For this reason, gel batteries also do not produce any oxyhydrogen gas during the charging process.

However, these benefits are at the expense of the amount of usable energy in the battery.

While a conventional lead-acid battery can use 80% of the energy contained in the battery, the gel battery uses only 60%. On the other hand, a gel battery is safe from deep discharge due to its design (according to DIN 43 539, Part 5).

Identification

Gel batteries are marked with the abbreviation "PzV". It is located on the identification plate of the battery.

Safety regulations for handling the battery

– If a charging station for gel batteries is set up, follow the national regulations of the country of use.

⚠ CAUTION

Risk of damage to the battery charger!

Components may be damaged if the battery charger is connected or operated incorrectly.

– Follow the operating instructions for the charging station or battery charger and for the battery.

Requirements for the charger

A gel battery requires a high-frequency charger. This means that the gel battery cannot be charged with a charger for conventional lead-acid batteries. For this reason, the charging socket of the gel battery has a special green coding pin. This coding pin ensures that it is possible only for a charger for gel batteries to form a connection assembly.

⚠ CAUTION

Possible damage to the gel battery!

Gel batteries may be charged only with chargers that are approved for gel batteries. A different charger may damage or destroy the battery.

– Do **not** remove, replace or convert the coding pin in the battery charging socket.

– Use only chargers that are approved for gel batteries.

Maintenance personnel

Only personnel trained for this purpose may:

- Charge the battery
- Replace the battery

This work must be carried out according to the instructions of the battery manufacturer and of the charger manufacturer.

– Observe the manufacturer's operating instructions for the battery and the charger.

– Observe the following safety information when replacing and charging the battery.

⚠ WARNING

Risk of crushing/shearing!

The battery is very heavy. There is a risk of serious injury if any parts of the body are caught under the battery.

There is a risk of injury if any parts of the body are wedged between the battery door and the edge of the chassis when the battery door is closed.

– Always wear safety shoes when replacing the battery.

– Only close the battery door if there are no parts of the body between the battery door and the edge of the chassis.

– The battery must only be replaced in accordance with the directions in these operating instructions.

– When charging and maintaining the battery, observe the manufacturer's operating instructions for the battery and the battery charger.

Battery weight and dimensions

⚠ DANGER

Risk of tipping due to change in battery weight

The battery weight and dimensions affect the stability of the industrial truck. When replacing the battery, the weight ratios must not be changed. The battery weight must remain within the weight range specified on the nameplate.

– Do not remove or change the position of ballast weights.

– Note the battery weight.

Damage to cables and battery male connector

⚠ CAUTION

There is a risk of short circuit if the cables are damaged.

Do not crush the battery cable when closing the battery door.

- Check the battery cable for damage.
- When removing and reinstalling the battery, ensure that the battery cables are not damaged.
- Ensure that the battery cable does not come into contact with the battery door.

⚠ CAUTION

Potential for damage to the battery male connector!

If the battery male connector is disconnected or connected while the key switch is switched on or while the battery charger is under load, an arc or a transition spark will be produced at the battery male connector. This can lead to erosion at the contacts and can considerably shorten the service life of the contacts.

- Switch off the key switch or the battery charger before the battery male connector is disconnected or connected.
- Do not disconnect the battery male connector while under load, except in an emergency.

Charging the gel battery

The charging procedure is in principle the same as for a lead-acid battery. However, no protective measures are required for the escape of oxyhydrogen gas.

- Park the industrial truck securely.
- Open the battery door completely.
- Disconnect the battery male connector.
- Do not place any metal objects or tools on the battery.
- Check the battery cables for damage.
  If necessary, have the battery cables replaced by the authorised service centre.
- Connect the battery female connector to the plug on the battery charger.
- Adjust the settings of the battery charger to the battery capacity of the gel battery.

– Start the battery charger.

NOTE

Observe the information in the operating instructions for the battery and the battery charger.

After charging

CAUTION

Risk of damage to components!

– Switch off the battery charger before you disconnect the charging cable.

– Switch off the battery charger.

– Disconnect the plug of the battery charger from the battery female connector.

– Connect the battery female connector to the industrial truck.

CAUTION

There is a risk of short circuit if the cables are damaged!

Do not crush the battery cable when closing the battery door.

– Ensure that the battery cable does not come into contact with the battery door.

– Close the battery door. When doing so, ensure that no cables are crushed between the chassis and the battery door.

The battery door must be locked in place.

The truck has a door contact switch for the battery door. If the battery door is not fully closed, the message Close battery door appears on the display of the display-operating unit. The industrial truck will not move.

Handling the lithium-ion battery

Safety regulations for handling the lithium-ion battery

First-aid measures

⚠ WARNING

Risk of injury!

Escaping gases can lead to breathing difficulties.

Course of action required if gases or liquids escape

– Immediately ventilate the area or go out into the fresh air; in more serious cases, call a doctor immediately.

Skin irritation can occur in the event of contact with the skin.

– Thoroughly wash the skin with soap and water.

Eye irritation can occur in the event of contact with the eyes.

– Immediately rinse eyes thoroughly with water for 15 minutes, then consult a doctor.

Maintenance personnel

The lithium-ion battery is virtually maintenance-free and can be charged by the driver.

– If you have any questions, please contact your authorised service centre.

– The handling instruction for the battery and the operating instructions for the battery charger must be followed.

– Observe the following safety regulations when maintaining, charging and changing the battery.

⚠ WARNING

Risk of crushing/shearing!

The battery is very heavy. There is a risk of serious injury if any parts of the body are caught under the battery.

If parts of the body are wedged between the battery door and the edge of the chassis when the battery door is closed, this could lead to injuries.

– Always wear safety shoes when replacing the battery.
– Only close the battery door if there is no part of the body between the battery door and the edge of the chassis.

The battery must only be replaced in accordance with the directions in these operating instructions.

– When charging and maintaining the battery, observe the manufacturer's maintenance instructions for the battery and battery charger.

Fire protection measures

⚠ DANGER

There is a risk of damage, short circuiting and explosion!

– Do not place any metal objects or tools on the battery.
– Keep away from naked flames and do not smoke.

⚠ DANGER

Increased risk of fire!

Damaged lithium-ion batteries pose an increased fire hazard.

In the event of a fire, large quantities of water are the best option to cool the battery.

– Evacuate the location of the fire as quickly as possible.
– Ventilate the location of the fire well, as the resulting combustion gases are corrosive if inhaled.
– Inform the fire brigade that lithium-ion batteries are affected by the fire.

– Observe the information provided by the battery manufacturer regarding the procedure in the event of a fire.

Battery weight and dimensions

⚠ DANGER

Risk of tipping due to change in battery weight!

The battery weight and dimensions affect the stability of the truck. When replacing the battery, the weight ratios must not be changed. The battery weight must remain within the weight range specified on the nameplate.

– Do not remove or change the position of ballast weights.

– Observe the battery weight.

General safety regulations for lithium-ion batteries

The following safety regulations generally apply to operating lithium-ion batteries.

– Comply with the specifications stated in the safety data sheets of the battery manufacturer.

– Protect the battery against mechanical damage to prevent internal short circuits.

– If batteries have even the slightest external damage, dispose of them in accordance with national regulations for the country in which they are being used.

– Do not expose batteries directly to continuously high temperatures or heat sources, such as direct sunlight.

– Train employees in how to handle lithium-ion batteries correctly.

Illustration of a lithium-ion battery

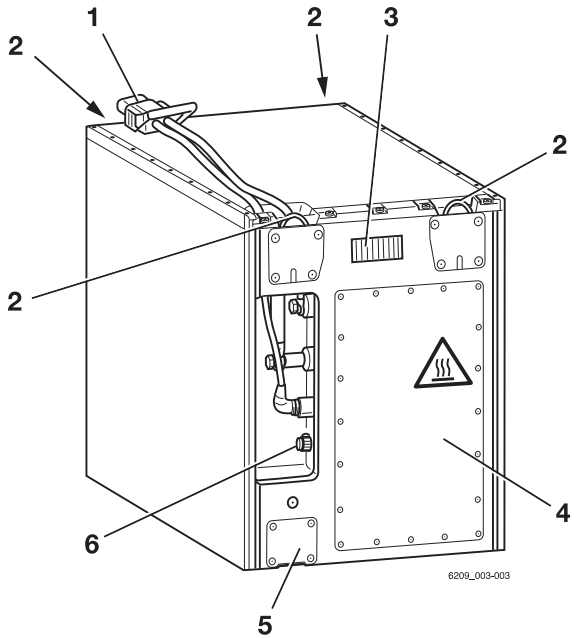

Example image

1 Battery male connector
2 Lifting eyes
3 Display
4 Technology compartment
5 Safety valve
6 Diagnostic connector

WARNING

Risk of accident due to weakened lifting eyes.

If bent lifting eyes are straightened, they lose their rigidity. The lifting eyes are then no longer able to support the weight of the battery. The battery may fall.

– **Do not** straighten bent lifting eyes.
– Have bent lifting eyes replaced by the authorised service centre.

NOTE

When switching to lithium-ion batteries, have the truck electronics adapted by the authorised service centre.

Regulations for storing lithium-ion batteries

NOTE

Lithium-ion batteries are classified as dangerous goods according to class 9.

The following recommendations apply:

- Wherever possible, store batteries at ground level so that they cannot be damaged by falling
- Store the batteries in a segregated area suitable for fire protection (container or safety cabinet)
- Store the batteries at a temperature between +15°C and +30°C and air humidity from 0% to 80%

Observe the following regulations for safe storage of the batteries:

– Store batteries fixed onto pallets and secured against overturning.

– Observe the floor load capacity of the storage area; refer to the manufacturer's specifications regarding battery weight

– To protect batteries against moisture, do not store them directly on the floor

– Due to the fire risk, store batteries outside buildings

– Store in a cool, dry and well-ventilated area

– Never subject the battery to temperatures below -35°C and above 80°C.

Long-term storage below -10°C or above 50°C has a negative impact on the service life of the battery.

– After three months, check the charge state of the battery and recharge if necessary

– Cordon off the relevant area of the warehouse

– Only persons who are aware of the risks and safety regulations may access this area

– Protect against direct sunlight

– Protect against precipitation

- Store in a way that protects the batteries against short circuits
- Store batteries at a safe distance from flammable materials
- Do not store batteries together with metallic objects
- Store lithium-ion batteries separately from other types of batteries (no mixed storage)
- Maintain a safety margin of at least 2.5 m from other goods
- To avoid a deep discharge, observe the specifications of the battery manufacturer regarding the maximum permissible storage period
- If you have any questions, contact your authorised service centre.

Checking the battery charge state

The charge state of the lithium-ion battery can be read on the display-operating unit of the truck and on the lithium-ion battery display.

Reading on the display-operating unit ▷

– Apply the parking brake.

– Switch on the key switch.

– Read the charge state from the display.

– Charge a discharged or partly discharged battery.

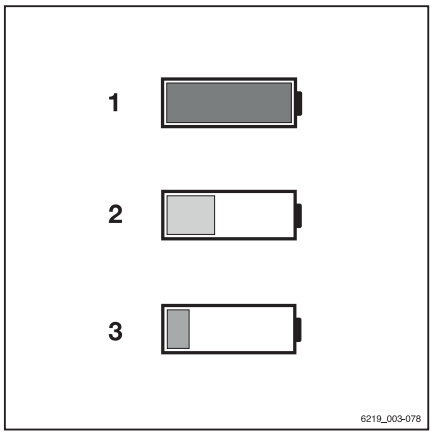

Meaning of the colours in the display

1 Green:
The charge state is > 10%.
The battery is sufficiently charged

2 Yellow:
The charge state is ≤ 10%.
Charge the battery soon.

3 Red:
Stop working. Charge the battery immediately. The battery is at risk of deep discharge.

Reading from the battery indicator ▷

The battery indicator is located on the side of the battery tray. Like the display-operating unit, the battery indicator shows the charge state of the lithium-ion battery. Warnings are issued only on this battery indicator.

– If you have any questions, contact your authorised service centre.

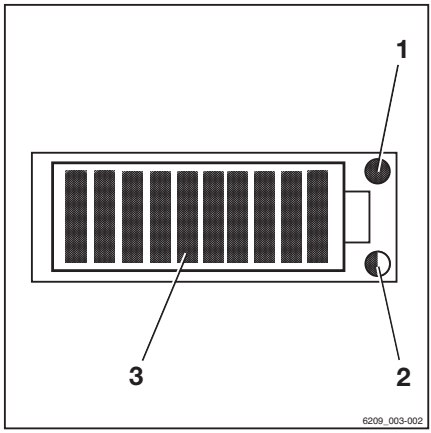

1 Service LED (red)
2 Temperature LED (yellow/red)
3 Charge state LEDs (red/green)

Charge state LEDs

When the battery is connected to the truck and the truck is switched on, the charge state LEDs (3) display the charge state in 10% increments. The charge state LEDs can light up green and red.

- A charge state of 0% to 20% is indicated by a red bar.
  If this bar flashes, the charge state is < 2%.

The truck can no longer be moved.

- A charge state of > 20% to 30% is indicated by yellow bars.
- A charge state of > 30% to 100% is indicated by green bars

When charging, the charge state LEDs (3) light up green as a chase light.

Service LED

The service LED (1) lights up red if the battery function is significantly restricted or if operation is not possible.

– Contact the authorised service centre.

Temperature LED

The temperature LED (2) indicates an increased temperature. Battery power is reduced. The LED remains illuminated until the temperature falls to within the normal range. The LED goes out as soon as the temperature falls into the normal range.

Colour of LED	Cause	Consequence
Flashing yellow	Slightly increased temperature (> 60°C)	Power reduction
Solid yellow	Increased temperature (> 65°C)	Shut-off
Flashing red	Greatly increased temperature (> 70°C)	Shut-off
Solid red	Greatly increased temperature (> 75°C)	Shut-off

Procedure if a lithium-ion battery has a low charge state

⚠ WARNING

Risk of component damage or destruction!

Deep discharge can permanently damage a lithium-ion battery or render the battery unusable.

– Always charge the battery in good time and do not allow the charge state to drop below 10%.

To prevent deep discharge of the lithium-ion battery, performance limitations are imposed once the charge state of the battery is ≤ 10%.

– If the charge state drops below 15%, drive to the charging station and charge the battery.

⚠ WARNING

There is no electric brake assistance when the battery is switched off!

The drives are de-energised when the battery is automatically switched off.

The truck will not be held by the regenerative brake if located on a slope.

– To brake, actuate the service brake.

– If the battery switches off, tow the truck to the charging station.

– Charge the battery.

Charging the lithium-ion battery

⚠ CAUTION

Risk of damage to components.

Incorrect connection or incorrect operation of the charging station or battery charger may result in damage to components.

– Follow the operating instructions for the charging station or battery charger and for the battery.

⚠ CAUTION

Risk of damage to components.

Using battery male connectors and battery charger plugs from different manufacturers can result in damage. They are not designed to be used together.

– Use battery male connectors and battery charger plugs from the same manufacturer.

– If the connectors are from different manufacturers, please contact your authorised service centre.

⚠ CAUTION

Risk of damage to components.

Damage and contamination of the battery male connector or the plug on the battery charger can lead to premature wear of the counterpart.

- Before each charging process, check both sides of the connection assembly between the battery charger and the battery for damage and contamination.
- Remove contamination immediately.
- Do **not** continue to use a damaged connection assembly. Arrange for the authorised service centre to repair the connection assembly.

NOTE

To prevent deep discharge of the lithium-ion battery, performance limitations are imposed once the charge state of the battery drops to a certain level. Charge the battery before the charge state drops below 15%.

If the truck is supplied with a lithium-ion battery, the truck is equipped with the quick charge access (1). The lithium-ion battery is charged only via the quick charge access (1). The connection assembly on the lithium-ion battery remains in place. It is not necessary to open the battery hood.

To read the battery charge state; see the section entitled "Checking the battery charge status".

- Park the truck securely.
- Keep away from naked flames. Do not smoke.

– Gently press in the lid (2) and release it.

The lid (2) is partially opened by a spring.

– Then open the lid (2) completely by hand and hold it.

The lid (2) is secured against unintentional opening by a spring.

– Connect the charging cable to the quick charge access (1).

– Connect the battery male connector to the plug on the battery charger.

– Start the battery charger.

The charging process starts automatically. The display signals the charging process by illuminating the LEDS as a chase light.

The battery charger will indicate when the battery is fully charged. Only disconnect the battery from the battery charger if no current is flowing.

The battery has no memory effect. Therefore, it can be charged in any charge state without the capacity of the battery being impaired.

At ambient temperatures below 0°C, the charging process will take much longer.

– Observe the information in the operating instructions for the battery and for the battery charger.

After charging

– The battery charger will switch off automatically.

– Disconnect the charging cable from the quick charge access (1).

When the plug on the battery charger is disconnected from the quick charge access (1), the lid (2) closes automatically by spring pull.

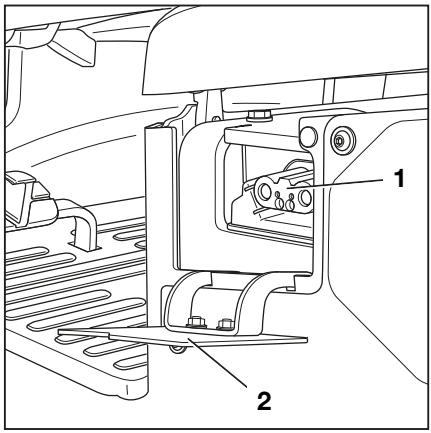

NOTE

The lid is monitored by a sensor. If the lid is not completely closed, the truck cannot be switched on again.

Charging state display on the display-operating unit for lithium-ion batteries

When charging lithium-ion batteries, the charging state display (3) appears in the display-operating unit.

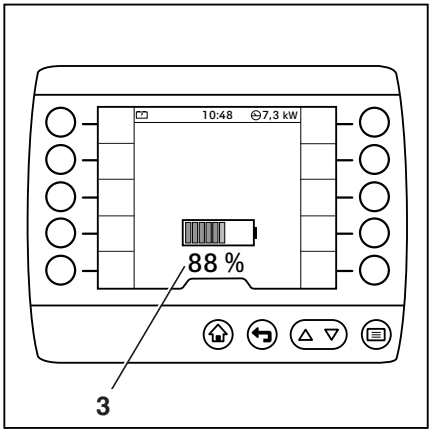

If the charging state display (3) does not appear, there is an error. The charging quick-access (1) may not recognise the charging cable.

– In this case, disconnect the charging cable from the charging quick-access and re-establish the connection.

If the charging process is running, the charging state display (3) is animated in green.

If the charging process is not running, the charging state display (3) flashes in grey.

Charging the lithium-ion battery with the truck switched off

– Connect the charging cable to the quick charge access (1).

Battery charging takes place. The display-operating unit shows the charging state display (3).

– When the charging process is complete, disconnect the charging cable from the charging quick-access (1).

Charging the lithium-ion battery with the truck switched on

– Connect the charging cable to the quick charge access (1).

The truck goes into the charging state. The drives are de-energised.

Battery charging takes place. The display-operating unit shows the charging state display (3).

– When the charging process is complete, disconnect the charging cable from the charging quick-access (1).

Battery heating system

To protect the lithium-ion battery from cooling down at temperatures below 5°C, the truck has a battery heating system. This heating system switches on and off with the truck. The heating system also switches on when the lithium-ion battery is being charged, so that the lithium-ion battery is charged at a constant temperature between 5°C and 10°C.

Cooled lithium-ion batteries have performance limitations during operation. STILL therefore recommends that the battery heating system is not deselected when ordering the truck.

If the truck is parked at temperatures below 5°C, connect a battery charger if possible.

NOTE

When purchasing a used STILL RXE, have the authorised service centre check to see whether the truck is equipped with a battery heating system. Only if there is a battery heater is it possible to park the truck at temperatures below 5°C for an extended period.

Replacing and transporting the battery

General information on replacing the battery

⚠ CAUTION

Component damage possible due to means of transport and battery rolling away!

The means of transport and battery may roll away in an uncontrolled manner if the battery is not removed on a level, firm and even floor.

– Observe the operating instructions of the means of transport used.

– Only remove the battery when the truck is on level, even ground with sufficient load capacity.

The battery can be removed using the following aids and means of transport:

- Roller channel (internal and external) and hand pallet truck or truck
- C hook and hand pallet truck or truck. If there is no roller channel.

The load capacity of the means of transport used must at least match the battery weight (see battery identification plate).

Changing to a different battery type

The truck can be converted to a different battery type and capacity.

The new battery capacity and new battery type must be set in the display-operating unit.

- If this is not done, the actual battery discharge status cannot be determined. The battery charge level is not displayed correctly.
- In the worst case scenario, deep discharge can damage the battery.

Using his/her access authorisation, the fleet manager can set the new battery capacity and the new battery type in the display-operating unit.

– Use only lithium-ion batteries that have been approved by STILL for use with this truck.

Setting the new battery capacity and the new battery type

– Stop the truck.

– Apply the parking brake.

– Press the button.

– Press the softkey.

The first menu level appears.

– Activate the "Access authorisation for the fleet manager".

– Press the `Truck settings` softkey .

– Press the `Battery` softkey.

– Press the `Battery type` softkey.

The battery types are listed.

– Select the battery type by pressing the appropriate softkey.

– Return to the `Battery` menu.

– Press the `Capacity` softkey.

– Use the softkeys to enter and confirm the battery capacity according to the battery nameplate.

– Switch the truck off and on again.

The changed settings will be active once the truck is switched on.

Replacing the battery using an external roller channel (variant)

⚠ DANGER

Risk of crushing due to the means of transport used tipping over or rolling away!

– The load capacity of the means of transport used must correspond to at least the battery weight (see battery identification plate).

– The means of transport used must be equipped with a parking brake.

– Observe the operating instructions of the means of transport used.

Replacing and transporting the battery

⚠ WARNING

Risk of accident due to overloading of the means of transport used!

The load capacity of the means of transport used must at least match the weight of the battery and the weight of the changing bridge.

– Observe the nameplates of the battery and of the changing bridge.

⚠ CAUTION

Damage to the battery possible!

– Place the external roller channel along with the battery only on a firm surface with sufficient load-bearing capacity.

– Do **not** place the external roller channel and battery on unsurfaced ground or in a rack.

NOTE

If the external roller channel is used, use only battery trays without a coating on the underside. The paint used for the coating can chip off over time and block the rollers of the roller channel.

If the truck is equipped with an external roller channel (variant) for replacing the battery, the battery (5) is positioned on a roller channel(6) in the battery compartment.

The battery lock (4) holds the battery (5) at the bottom of the tray. The screw (3) can be loosened and tightened using a 14-mm hexagon socket wrench.

The battery can be replaced using the following means of transport:

- Truck
- Electric hand pallet truck
- Hand pallet truck with parking brake

▷

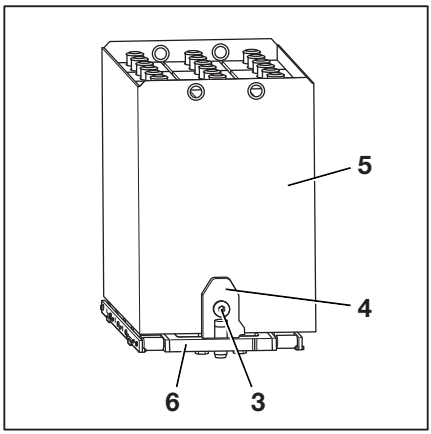

The possible battery sizes depending on the truck model are:

Battery type	RXE 10 (5510)	RXE 13 (5513)	RXE 15 (5515)	RXE 16C (5516)
4 PZS	X	-	-	-
5 PZS	-	X	-	-

Battery type	RXE 10 (5510)	RXE 13 (5513)	RXE 15 (5515)	RXE 16C (5516)
7 PZS	-	X	X	X
8 PZS	-	-	X	X

– Park the truck securely on a level and horizontal surface and switch off the truck.

Removing the battery

– Open the battery hood and the battery door.

⚠ CAUTION

Potential for damage to the battery male connector!

If the battery male connector is disconnected while the key switch is switched on (under load), a jump spark will be produced. This jump spark can damage the contacts and considerably shorten the service life of the contacts.

– Switch off the key switch before disconnecting the battery male connector.

– Do not disconnect the battery male connector while the key switch is switched on, except in an emergency.

– Pull the battery cable (8) out from under the bracket (7) and expose it. ▷

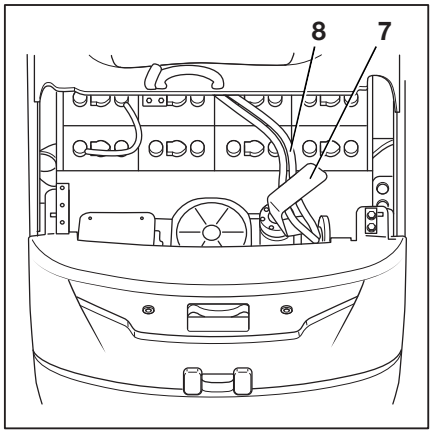

– Disconnect the battery male connector and place it on the battery.

– Place the external roller channel on the means of transport and ensure that it is fully supported.

– Read off the battery type on the battery's nameplate and set the indexing bolt (2) to this battery type.

– To do this, loosen the indexing bolt with an open-ended spanner (16 mm AF), slide it into the correct battery type in the slotted piece and tighten the indexing bolt again.

The possible battery types are printed on an adhesive label next to the slotted piece.

– Open the battery safety catch (1) as shown by the direction of the arrow.

▷

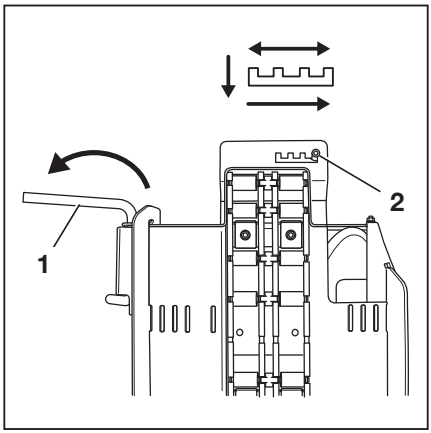

– Place the battery changing bridge so that the indexing bolt (2) is in the corner of the edge.

▷

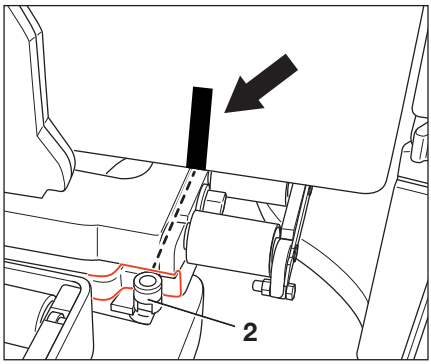

NOTE

In order to always position the indexing bolt correctly, it is useful to have a marking (arrow) as a positioning support on the battery tray. This marking can be applied by attaching an adhesive strip or using a coloured marker pen.

– Lower the external roller channel and move it under the edge.

– Leave enough space so that the indexing bolt (2) does not hit.

– Move the external roller channel under the edge and lift it until it is level with the internal roller channel.

▷

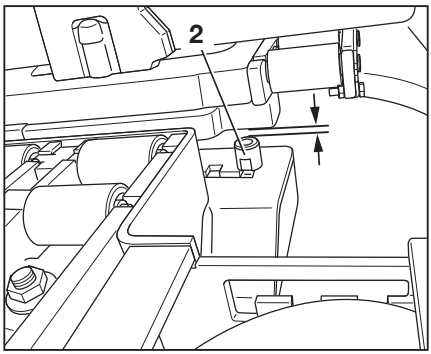

The external roller channel is placed correctly. ▷

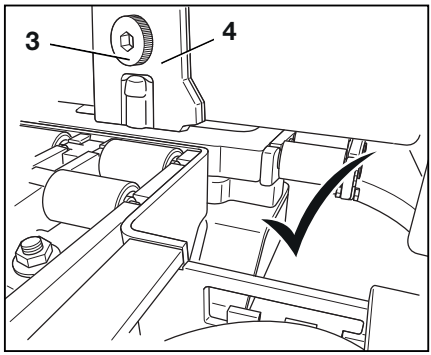

– Loosen the screw (3) and remove the battery lock (4).
– Move the battery out of the battery compartment and close the battery safety catch (1) in the opposite direction.

The battery can now be moved to the desired location.

Installing the battery

– Move the external roller channel under the edge and lift it until it is level with the internal roller channel.
– Move the battery into the battery compartment and open the battery safety catch (1) in the direction of the arrow. ▷

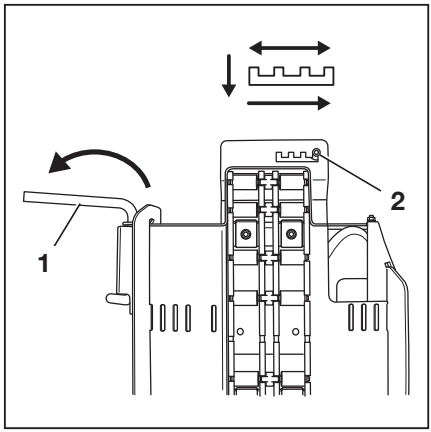

– Fit the battery lock (4) and screw in the screw (3). Tighten with a 14-mm hexagon socket wrench.
– Lower the external roller channel and transport it away.

⚠ CAUTION

Potential for damage to the battery male connector!

If the battery male connector is connected while the key switch is on (under load), a jump spark will be produced. This jump spark can damage the contacts and considerably shorten the service life of the contacts.

– Switch off the key switch before connecting the battery male connector.
– Do not connect the battery male connector while the key switch is switched on, except in an emergency.

– Connect the battery male connector.

– Place the battery cable (8) under the bracket (7). ▷
– Close the battery hood and the battery door.

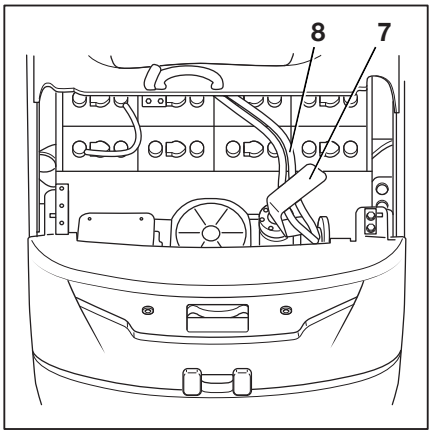

Replacing the battery with a C hook (variant)

⚠ DANGER

Risk of fatal injury caused by failure of the lifting equipment!

– The load capacity of the lifting equipment (e.g. truck, crane) must at least match the battery weight and the C hook (see battery identification plate and identification plate of the C hook).
– Observe the operating instructions for the lifting equipment.

The battery can be lifted out of the battery compartment using the C hook (variant).

– Park the truck securely and switch it off.

Removing the battery

– Open the battery hood (1) and the battery door (3). ▷

⚠ CAUTION

Risk of damage to the battery male connector!

If the battery male connector is disconnected while the key switch is switched on (under load), a jump spark will be produced. This jump spark can damage the contacts and considerably shorten the service life of the contacts.

– Switch off the key switch before disconnecting the battery male connector.
– Do not disconnect the battery male connector while the key switch is switched on, except in an emergency.

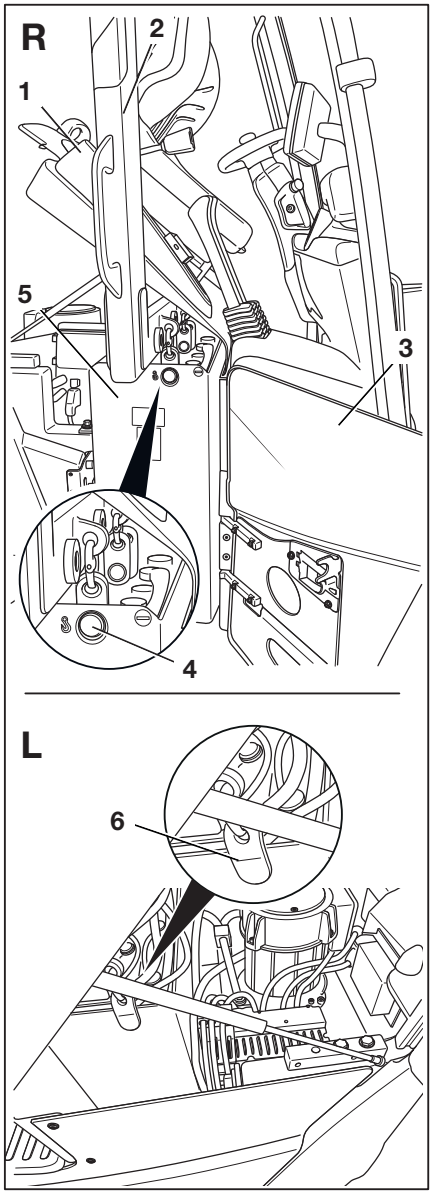

- Pull the battery cable (8) out from under the bracket (7) and expose it. ▷
- Disconnect the battery male connector and place it on the battery.
- Place the C hook above the battery (5).
- Ensure that the cams (4, 6) engage in the bores in the battery tray on the right-hand and left-hand sides.
- Remove the battery lock at the bottom of the tray.

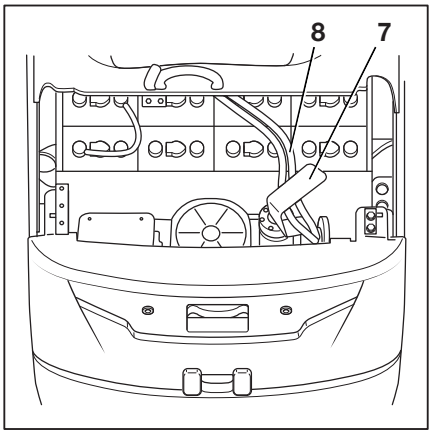

- To do this, unscrew the screws (9) and remove the battery lock (10). ▷
- Lift the battery out of the battery compartment and set it down carefully.

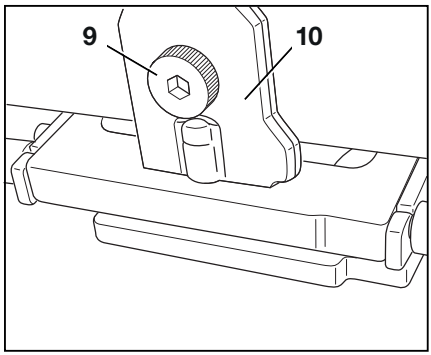

Installing the battery

- Lift the battery into the battery compartment using the C hook.
- Fit the battery lock (10) and screw in the screw (9). Tighten with a suitable hexagon socket wrench.
- Remove the C hook.
- Connect the battery male connector.

– Place the battery cable (8) under the bracket (7).
– Close the battery hood and the battery door.

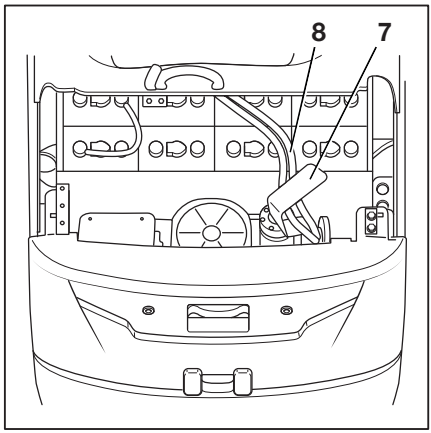

Special notes for installing the lithium-ion battery

With the exception of the following special notes, lithium-ion batteries are replaced in the same way as lead-acid batteries.

– Push down the lifting eyes before inserting the battery into the battery compartment. Make sure that the lifting eyes **do not** protrude.

The lifting eyes may bend in the event of a collision with the truck chassis.

– Install the lithium-ion battery with the display facing the outside of the truck so that it can be read when the battery door or battery cover is open.
– Lay the battery cable on the battery. Make sure that the cable does not come into contact with the truck chassis during installation.

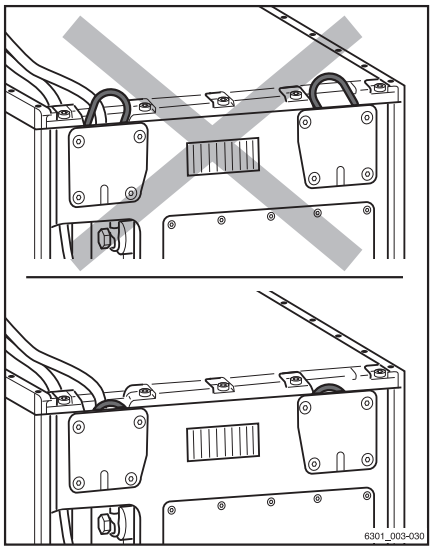

Transporting the battery by crane

⚠ DANGER

Risk of fatal injury from falling load!

– Never walk or stand underneath suspended loads.

– Park the truck at a sufficient distance from obstacles to prevent damage to the truck when lifting the battery using the crane.

– To avoid short circuits, cover batteries with open terminals or connectors with a rubber mat.

– Attach the battery (1) to suitable lifting gear (2).

Follow the operating instructions for the lifting gear.

The lifting gear must exert vertical traction so that the lifting eyes on the tray are not pressed together.

– Lift the battery from the roller channel. Ensure that there is sufficient distance from the battery door.

– Set the battery down carefully.

– Do not place slack lifting gear on the battery or allow it to fall on the battery.

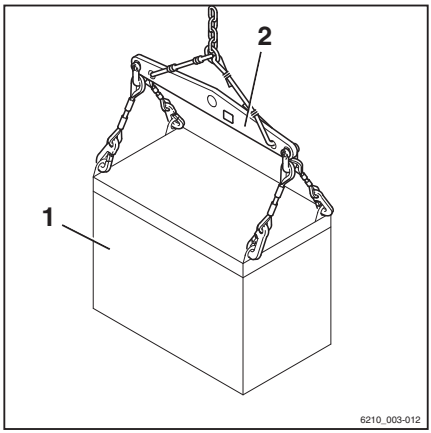

Li-Ion ready

Description

All RX electric trucks are also available to order as Li-Ion ready versions (variants). On these trucks, the authorised service centre can simply replace the lead-acid battery with a lithium-ion battery.

STILL lithium-ion batteries are exclusive STILL innovations and are matched to the application and the truck in question. This means that STILL lithium-ion batteries meet the highest demands and achieve a particularly high quality and safety standard. Three different lithium-ion batteries are available from STILL, depending on the voltage.

Advantages of the lithium-ion battery:

- No battery replacement required
- Intermediate charging possible and short charging times
- More power with less energy consumption
- Maintenance-free batteries
- Decentralised, safe charging points directly at the point of use
- Double the service life

Lead-acid and lithium-ion batteries in comparison

	Lithium-ion	Lead-acid
Charging cycles	2500...4000 full charging cycles	1200...1300 charging cycles
Efficiency	High	Medium
Performance	Total duration	Decreasing from 50%
Maintenance	Maintenance-free	Not maintenance-free
Training requirement	Low	Medium

Li-Ion ready

If the truck is Li-Ion ready, the truck has an access point at the side or the rear for charging the lithium-ion battery. ▷

Only approved STILL lithium-ion batteries may be used to retrofit a lithium-ion battery.

⚠ CAUTION

Component damage due to excessive charging currents.

If the truck is equipped with quick charge access and external battery chargers are used, defined charging currents must **not** be exceeded:

300 A for lead-acid batteries (200 A for RX20 14–20)

375 A for lithium-ion batteries

– Limit the charging current according to the installed battery.

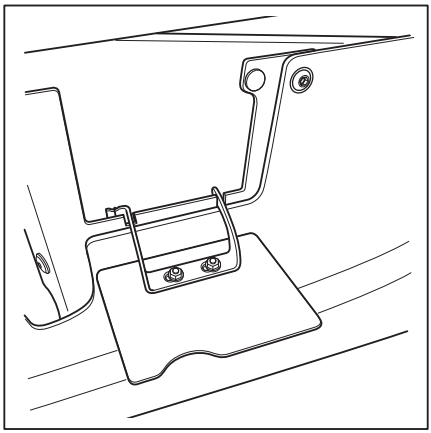

Example illustration

Cleaning the truck

Cleaning the truck

⚠ WARNING

Risk of injury from falling off the truck!

When climbing onto the truck, there is a risk of getting stuck or slipping and falling. Use suitable equipment to reach higher points on the truck.

– Use only the steps provided for this purpose to climb onto the truck.

– Use equipment such as stepladders or platforms to reach inaccessible areas.

⚠ WARNING

Risk of fire due to flammable cleaning materials!

Flammable cleaning materials can be ignited by hot components.

– Do not use any flammable cleaning materials.

⚠ CAUTION

Risk of fire due to flammable materials!

Deposits and solids can be ignited by hot components, e.g. drive units.

– Remove deposits and solids.

⚠ CAUTION

Risk of damage to the battery male connector when disconnecting!

If the battery male connector is disconnected while the key switch is switched on under load, an arc will be produced. The arc can damage the contacts and considerably shorten the service life of the contacts.

– Switch off the key switch.

– Only disconnect the battery male connector while the key switch is switched off.

⚠ CAUTION

If water penetrates the electrical system, there is a risk of a short circuit occurring!

– Strictly adhere to the following steps.

⚠ CAUTION

Excessive water pressure or water and steam that are too hot can damage truck components.

– Strictly adhere to the following steps.

⚠ CAUTION

Possible component damage due to compressed air.

– If components are cleaned with compressed air, the air must have a maximum pressure of 0.15 bar.

This prevents liquids or small solids from being forced through slots or openings inside components and causing damage.

⚠ CAUTION

Abrasive cleaning materials can damage the surfaces of components!

Using abrasive cleaning materials that are unsuitable for plastics can cause plastic parts to dissolve or become brittle. The screen on the display-operating unit could become cloudy.

– Strictly adhere to the following steps.

– Park the truck securely.
– Switch off the key switch.
– Disconnect the battery male connector.
– Do not spray electric motors and other electrical components or their covers directly with water.
– Use only high-pressure cleaners with a maximum output power of up to 60 bar and 85 °C.
– If a high-pressure cleaner is used, maintain a distance of at least 1 m between the nozzle and the object being cleaned.
– Do not aim the cleaning jet directly at adhesive labels or decal information.
– Remove all deposits and accumulations of foreign materials in the vicinity of hot components.
– Use only non-flammable fluids for cleaning.
– Observe the manufacturer's guidelines for working with cleaning materials.

- Clean plastics only with cleaning materials intended for plastics.
- Clean the truck exterior using water-soluble cleaning materials and water. Cleaning with a water jet, a sponge or a cloth is recommended.
- Clean all accessible areas.
- Before lubrication, clean the oil filling openings and the area around the oil filling openings, as well as the lubricating nipples.

Cleaning the electrical system

⚠ WARNING

Danger of electric shocks due to residual capacity!

- Never reach into the electrical system with your bare hands.

⚠ CAUTION

Cleaning electrical system parts with water can damage the electrical system.

Cleaning electrical system parts with water is forbidden!

- Do not remove covers etc.
- Only use dry cleaning materials according to the specifications in the section "Cleaning the truck".

- Clean the electrical system parts with a metal-free brush and blow the dust off with low-pressure compressed air.

Cleaning load chains

▷

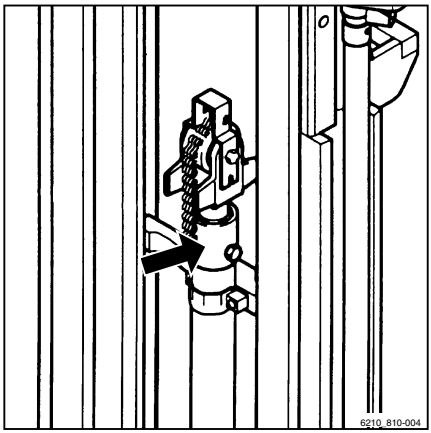

⚠ WARNING

Risk of accident!

Load chains are safety elements.

The use of cold/chemical cleaners or fluids that are corrosive or contain acid or chlorine can damage the chains and is forbidden!

– Observe the manufacturer's guidelines for working with cleaning materials.

– Place a collection vessel under the lift mast.

– Clean with paraffin derivatives, such as benzine.

– When using a steam jet, do not use additional cleaning agents.

– Remove any water in the chain links using compressed air immediately after cleaning. Move the chain several times during this procedure.

– Immediately after drying the chain, spray it with chain spray. Move the chain several times during this procedure.

For chain spray specifications, see the "Maintenance data table" chapter.

ENVIRONMENT NOTE

Dispose of any fluid that has been spilled or collected in the collection vessel in an environmentally friendly manner. Follow the statutory regulations.

After cleaning

⚠ CAUTION

Danger of short-circuits!

Ingress of moisture into the battery male connector can lead to an electrical short circuit.

– Use compressed air to dry the battery male connector before you connect the battery male connector.

– Only connect the battery male connector if it is dry.

- Thoroughly dry the truck after wet cleaning, e.g. using compressed air.
- Apply a thin layer of oil or grease to all uncoated moving parts.
- Grease the truck.
- Lubricate the joints and controls.
- Lubricate the battery cover interlock.
- Check that the battery male connector is dry before you connect the battery male connector.

NOTE

The more often the truck is cleaned, the more frequently the truck must be lubricated.

Transporting the truck

Transport

⚠ CAUTION

Risk of material damage from overloading!

If the truck is driven onto a means of transport, the load capacity of the means of transport, HGV ramps and loading bridges must be greater than the total actual weight of the truck. Components can be permanently deformed or damaged due to overloading.

– Determine the total actual weight of the truck.
– Only load the truck if the load capacity of the means of transport, HGV ramps and loading bridges is greater than the total actual weight of the truck.

Determining the total actual weight

▷

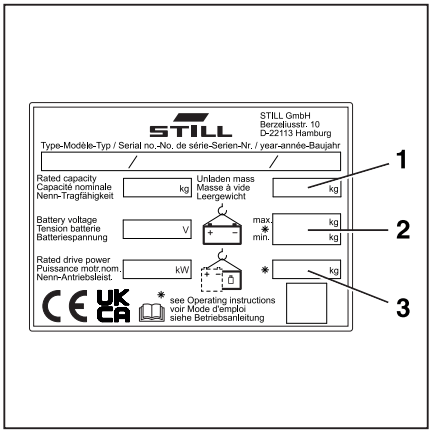

– Park the truck securely.
– Determine the unit weights by reading the truck nameplate and, if necessary, the attachment nameplate (variant).
– Add together the determined individual weights to obtain the total weight of the truck:

Net weight (1)
\+ Max. permissible battery weight (2)
\+ Ballast weight (variant) (3)
\+ Net weight of attachment (variant)
\+ 100 kg allowance for driver
= Total actual weight

⚠ DANGER

Risk of accident from the truck crashing!

Steering movements can cause the rear of the truck to veer off the loading bridge towards the edge. This may cause the truck to crash.

- Before driving across a loading bridge, ensure that the loading bridge is properly attached and secured.
- Ensure that the transport vehicle onto which the truck is to be driven has been sufficiently secured to prevent it from shifting.
- Maintain a safety distance from edges, loading bridges, lorry ramps, working platforms etc.
- Drive slowly and carefully onto the transport vehicle.

Wedging the wheels

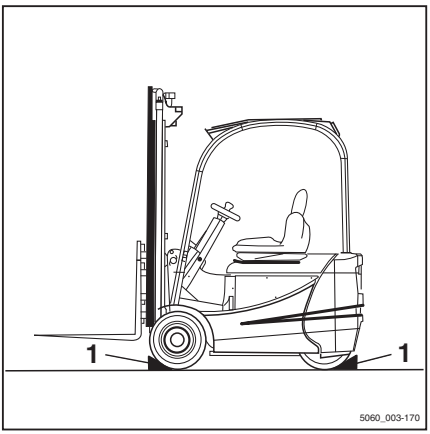

NOTE

Due to its design, the wheels of the truck can be wedged securely only if the fork carriage is raised before the wedges are positioned. Once the wheel chocks are positioned and to ensure that the truck is parked securely, lower the fork carriage as far as the wheel chocks.

- Raise the fork carriage high enough so that the wheel chocks can be wedged in front of the front wheels.
- Secure the truck from rolling away by placing a wheel chock (1) in front of each front wheel and behind the back wheel.
- Park the truck securely.

⚠ CAUTION

Risk of damage to the battery male connector!

If the battery male connector is disconnected while the key switch is switched on (under load), an arc will be produced. This can lead to erosion at the contacts, which considerably shortens the service life of the contacts.

- Switch off the key switch before disconnecting the battery male connector.
- Do not disconnect the battery male connector while the key switch is switched on, except in an emergency.

- Ensure that the key switch is switched off.

– Disconnect the battery male connector.

Lashing down

⚠ CAUTION

Abrasive lashing straps can rub against the surface of the truck and cause damage.

– Position slip-resistant pads underneath the lifting points (3) (e.g. rubber mats or foam).

– Attach lashing straps (1) to both sides of the truck and lash the forklift truck to the rear. ▷

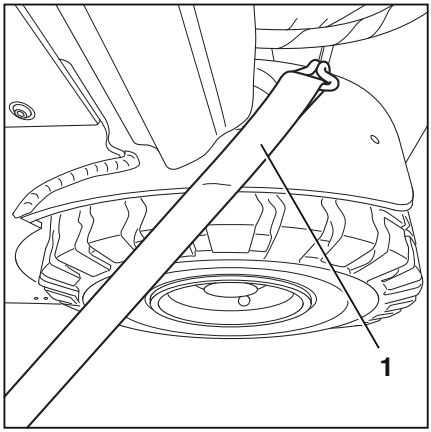

– Loop lashing straps (2) around the rear of the truck within the chassis contour and lash the truck to the front. ▷

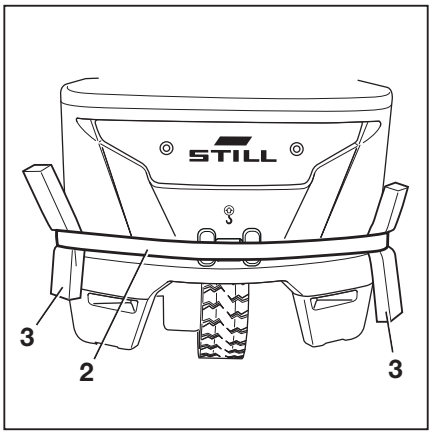

⚠ DANGER

The truck may slip if the lashing straps slip!

The truck must be lashed securely so that it cannot move during transportation.

– Make sure that the lashing straps are tightened securely and that the pads cannot slip off.

Crane loading

Crane loading is only intended for transporting the complete truck, including the lift mast, for its initial commissioning. This may be performed only by the authorised service centre with the harnesses expressly provided and approved for this purpose.

Decommissioning

Decommissioning and storing the truck

⚠ CAUTION

Damage to components due to incorrect storage!

Improper storage or decommissioning for a period of more than two months can result in corrosion damage to the truck. If the truck is parked in an ambient temperature of below -10°C for an extended period, the batteries will cool down. The electrolyte may freeze and damage the batteries.

– Store the truck in a dry, clean, frost-free and well-ventilated environment.
– Implement the following measures before decommissioning.

Measures to be implemented before decommissioning

– Clean the truck thoroughly; see the chapter entitled "Cleaning the truck".
– Lift the fork carriage to the stop several times.
– Tilt the lift mast forwards and backwards several times and, if fitted, move the attachment repeatedly.
– To relieve the strain on the load chains, lower the fork onto a suitable supporting surface, e.g. a pallet.
– Check the hydraulic oil level.
– Apply a thin layer of oil or grease to all uncoated moving parts.
– Lubricate the truck according to the "lubrication plan".
– Lubricate the joints and actuators.

⚠ CAUTION

Potential for damage to the battery male connector!

If the battery male connector is disconnected while the truck is switched on (under load), an electric arc will be produced. This can lead to erosion of the contacts, which considerably shortens the service life of the contacts.

– Switch off the truck before the battery male connector is disconnected.
– Do not disconnect the battery male connector while the truck is switched on, except in an emergency.

– Disconnect the battery male connector.
– Check the battery condition, acid level and acid density.
– Service the battery.

NOTE

Only store batteries that are fully charged.

– Spray all exposed electrical contacts with a suitable contact spray.

⚠ CAUTION

Tyre deformation as a result of continuous loading on one side!

Have the truck raised and jacked up by the authorised service centre so that all wheels are off the ground. This prevents permanent deformation of the tyres.

– Only have the truck raised and jacked up by the authorised service centre.

⚠ CAUTION

Risk of corrosion damage due to condensation on the truck!

Many plastic films and synthetic materials are watertight. Condensation water on the truck cannot escape through these covers.

– **Do not** use plastic film as this facilitates the formation of condensation water.
– Cover with vapour-permeable material, e.g. cotton.

– Cover the truck to protect it from dust.
– If the truck needs to be shut down for even longer periods, contact the authorised

service centre to find out about additional courses of action.

Use after storage or decommissioning

If the truck has been decommissioned for longer than six months it must be checked carefully before being used again. As with the annual safety inspection, this check must also include all safety-related aspects of the truck.

– Clean the truck thoroughly; see the chapter entitled "Cleaning the truck".
– Lubricate the joints and actuators.
– Check the battery condition, acid level and acid density.
– Check the hydraulic oil for condensation water. Change the hydraulic oil if necessary.
– Arrange for the authorised service centre to perform the same inspections and tasks that were carried out before initial commissioning.
– Perform the "visual inspections and function checking".

The following points in particular must be checked:

- Drive
- Controller
- Steering
- Brakes (service brake, parking brake)
- Lifting system (lifting accessories, load chains, mounting)

NOTE

For further information, see the workshop manual for the truck or contact the authorised service centre.

5

Maintenance

Safety regulations for maintenance

General information

To prevent accidents during maintenance and repair work, all necessary safety measures must be taken, e.g.:

- Apply the parking brake.
- Turn off the key switch and remove the key.
- Disconnect the battery male connector.
- Ensure that the truck cannot move unintentionally or start up inadvertently.
- If required, have the truck jacked up by the authorised service centre.
- Have the raised fork carriage or the extended lift mast secured against accidental lowering by the authorised service centre.
- Insert an appropriately sized wooden beam as an abutment between the lift mast and the cab, and secure the lift mast to prevent it tilting backwards unintentionally.
- Observe the maximum lift height of the lift mast, and compare the dimensions from the technical data with the dimensions of the hall into which the truck is to be driven. These steps are taken to prevent a collision with the ceiling of the hall and to avoid any damage caused as a result.

Working on the hydraulic equipment

The hydraulic system must be depressurised prior to all work on the system.

Working on the electrical equipment

Work may only be performed on the electrical equipment of the truck when it is in a voltage-free state. Function checks, inspections and adjustments on energised parts must only be performed by trained and authorised persons, taking the necessary precautions into account.

Rings, metal bracelets etc. must be removed before working on electric components.

To prevent damage to electronic systems with electronic components, such as an electronic driving regulator or lift control, these components must be removed from the truck prior to the start of electric welding.

Work on the electrical system (e.g. connecting a radio, additional headlights etc.) is only permitted with approval from the authorised service centre.

Safety devices

After maintenance and repair work, all safety devices must be reinstalled and tested for operational reliability.

Set values

The device-dependent set values must be observed when making repairs and when changing hydraulic and electrical components. These are listed in the appropriate sections.

Lifting and jacking up

⚠ DANGER

There is a risk to life if the truck tips over!

If not raised and jacked up properly, the truck may tip over and fall off. Only the hoists specified in the workshop manual for this truck are allowed and are tested for the necessary safety and load capacity.

- Only have the truck raised and jacked up by the authorised service centre.
- Only jack the truck up at the points specified in the workshop manual.

The truck must be raised and jacked up for various types of maintenance work. The authorised service centre must be informed that this is to take place. Safe handling of the truck and the corresponding hoists is described in the truck's workshop manual.

Working at the front of the truck

⚠ DANGER

Risk of accident due to an unsecured lift mast.

If the lift mast or fork carriage is raised, no work may be performed on the lift mast or at the front of the truck unless the appropriate safety measures are put in place.

– When securing, only use chains with sufficient load-bearing capacity.
– Contact the authorised service centre regarding this matter.

⚠ CAUTION

Possibility of damage to the ceiling!

– Note the maximum lift height of the lift mast.

Securing the lift mast against tilting backwards

⚠ DANGER

Risk of accident!

This work must only be performed by an authorised service technician.

– To secure the lift mast against tilting back, contact the authorised service centre.

Removing the lift mast

⚠ DANGER

Risk of accident!

This work must only be performed by an authorised service technician.

– Commission the authorised service centre to remove the lift mast.

Securing the lift mast against falling off

⚠ DANGER

Risk of accident!

This work must only be performed by an authorised service technician.

– To secure the lift mast against falling, contact the authorised service centre.

General maintenance information

Personnel qualifications

Only qualified and authorised personnel are allowed to perform maintenance work. Regular safety checks and checks after unusual incidents must be performed by a competent person. The competent person must conduct their evaluation and assessment from a safety standpoint, unaffected by operational and economic conditions. The competent person must have sufficient knowledge and experience to be able to assess the condition of a truck and the effectiveness of the protective devices in accordance with technical conventions and the principles for testing trucks.

Maintenance personnel for batteries

Batteries must only be charged, serviced, and replaced by personnel who have received appropriate training in accordance with the instructions from the manufacturers of the battery, battery charger and truck.

– Follow the handling instructions for the battery and the operating instructions for the battery charger.

Maintenance work without special qualifications

Simple maintenance work, such as checking the hydraulic oil level, may be carried out by untrained personnel. A qualification of the type held by a competent person is not required to carry out this work. The required tasks are described in the chapter entitled "Preserving operational readiness".

Information for carrying out maintenance

This section contains all the information required to determine when the truck requires maintenance. Carry out maintenance work within the time limits according to the hour meter and using the maintenance check lists

below. This ensures that the truck remains ready for operation and provides optimal performance and service life. It is also a precondition for any warranty claims.

Maintenance timeframe

If maintenance is needed, the message `Service required` appears on the display.

– Arrange for the authorised service centre to perform the maintenance work on the truck.

– The maintenance check lists indicate the maintenance work that is due.

The intervals are defined for standard use. Shorter maintenance intervals can be defined in consultation with the operating company, depending on the application conditions of the truck.

The following factors may necessitate shorter maintenance intervals:

- Dirty, poor-quality roadways
- Dusty or salty air
- High levels of air humidity
- Extremely high or low ambient temperatures and extreme changes in temperature
- Multi-shift operation with a high duty cycle
- Specific national regulations for the truck or individual components

Service menu

The date when the truck requires maintenance is stored in the Service menu.

NOTE

Access to the settings menu is only available if the truck is at a standstill and the parking brake is applied. If the parking brake is released prematurely, the settings menu will close. Access is only granted when the password is entered by the fleet manager.

– Stop the truck.

– Apply the parking brake.

– Press the button.

– Press the softkey.

The first menu level appears.

– Activate the "Access authorisation for the fleet manager".

– Press the `Service` softkey.

The "Service menu" opens on the display.

– Press the `Maintenance interval` softkey.

This menu shows the operating hours remaining until the next scheduled maintenance interval or the latest date of the next scheduled maintenance interval.

The next maintenance due date can be set up and adjusted by the fleet manager. See the next section "Setting up and adjusting the due date counter for maintenance and safety checks".

NOTE

The maintenance interval can also be configured in the status line.

Setting up and adjusting the due date counter for maintenance and safety checks

On delivery from the factory, the display-operating unit indicates to the driver the number of operating hours until the standard maintenance intervals of 1000 h and 3000 h are due. The display also shows the latest date for maintenance.

To do this, proceed as follows:

– Press the `Service` softkey.

– Press the `Maintenance interval` softkey.

▷

1000-h interval	**880 h**
3000-h interval	**2120 h**
Latest date:	**04.02.22**

Setup and adjustment by the fleet manager

For the fleet manager, due date counters are also defined for the following checks:

- Regular testing of the truck for electric trucks and IC trucks
- Battery testing for electric trucks
- Exhaust gas testing and LPG testing for IC trucks

For these tests, the fleet manager can define the corresponding due dates with his access authorisation. To do this, proceed as follows:

– Activate the "Access authorisation for the fleet manager".

– Press the `Service` softkey.

– Press the `Maintenance interval` softkey.

– Press the softkey for the testing whose due date is to be set, e.g. `Safety check`. ▷

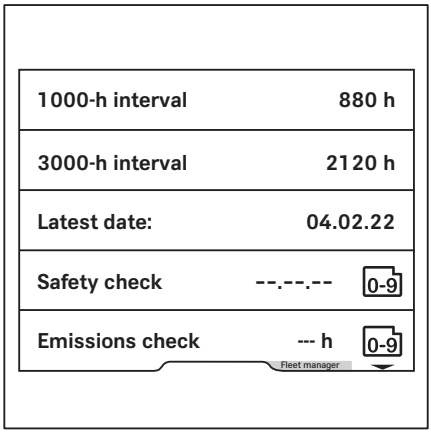

`Safety check` menu ▷

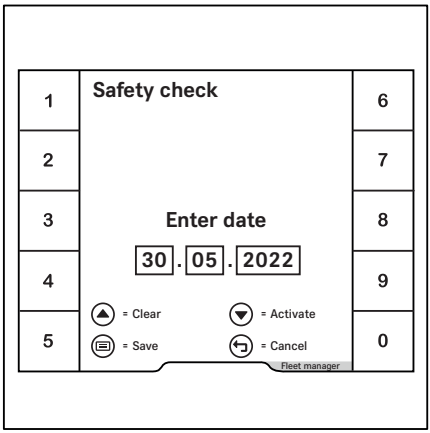

– Press the scroll button ▽ to activate the input.
– Enter the desired date using softkeys `0 to 9`.
– To `save`, press the ☰ button.

Due date counter for individual maintenance intervals

The authorised service centre can set up additional due date counters for individual maintenance intervals, e.g. for an attachment. The fleet manager can use his access authorisation to configure these due date counters. The process is then the same as for the due date counters created ex works.

Maintenance - 1000 hours/yearly

At operating hours										Carried out	
1000		2000		4000		5000		7000			
8000		10000		11000		13000		14000		✓	✗
Chassis, bodywork and fittings											
Check the chassis for cracks.											
Check the overhead guard/cab and panes of glass for damage.											
Check that the driver's seat is working correctly and check for damage.											
Check that the driver restraint system is working correctly and check for damage; clean if necessary.											
Variant: Check that the dual pedals are working correctly, check for damage and lubricate.											
Battery compartment											
Check the battery hood and interlock for correct function and for damage.											
Check that the gas spring is working correctly and that it is holding the truck.											
Check the battery lock.											
Variant: Check all moving parts in the roller channel for wear and lubricate.											
Tyres and wheels											
Check the tyres for wear.											
Check the wheels for damage. Check the tightening torques.											
Power unit											
Check the mounting of the drive unit and check the drive unit for leak tightness.											
Steering system											
Check that the steering system is working correctly and check for leak tightness.											
Check that the steering wheel is securely attached and check the rotary handle for damage.											
Check the steering stop.											
Grease the steering rim.											
Brake system											
Check all mechanical brake parts for condition, wear and correct function.											
Check the actuation distance of the brake pedal and adjust if necessary.											
Check the manual force required to apply the handbrake and adjust if necessary.											
Check the brake fluid level.											
Check the brake fluid switch for correct function.											
Perform a brake test.											

At operating hours										Carried out	
1000		2000		4000		5000		7000			
8000		10000		11000		13000		14000		✓	✖
Electrical system											
Check all power cable connections.											
Check that the switches, transmitters and sensors are working correctly.											
Check the covers of the electrical system for damage.											
Check the lighting and indicator lights.											
Battery and accessories											
Check the lead-acid battery for damage and check the acid density; observe the maintenance instructions provided by the manufacturer.											
Variant: Replace the non-return valve on lead-acid batteries with electrolyte circulation.											
Variant: Observe the manufacturer's maintenance instructions for lithium-ion batteries.											
Variant: Observe the manufacturer's maintenance instructions for lithium-ion batteries with OBC.											
Check the appliance plug and the truck harness for damage.											
Check the battery male connector and the battery harness for damage.											
Hydraulics											
Check the condition of the hydraulic system, check that it is working correctly and check for leak tightness.											
Check the hydraulics blocking function (ISO valve).											
Check the oil level.											
Lift mast											
Check the lift mast bearings for damage. Check the tightening torque.											
Check the lift mast profiles for damage and wear. Lubricate the lift mast profiles.											
Check the guide in the lower (load reversal) mast profile for damage and for wear.											
Check the load chains for damage and for wear. Adjust and lubricate the load chains.											
Check the lift cylinders and connections for damage and for leak tightness.											
Check the guide pulleys for damage and for wear.											
Check the support rollers and chain rollers for damage and for wear.											
Check the play between the fork carriage stop and the run-out stop.											
Check the tilt cylinders and connections for damage and for leak tightness.											
Check the fork carriage for damage and for wear.											

At operating hours										Carried out	
1000		2000		4000		5000		7000			
8000		10000		11000		13000		14000		✓	✗
Check the fork arm interlock for damage and check that it is working correctly.											
Check the fork arms for wear and for deformation.											
Check that there is a safety screw on the fork carriage or on the attachment.											
Special equipment											
Check the condition of the antistatic belt or antistatic electrode.											
Check the attachments for wear and damage. Observe the manufacturer's maintenance instructions.											
Check the trailer coupling for wear and damage. Observe the manufacturer's maintenance instructions.											
General											
Read out the error numbers and clear the list.											
Reset the maintenance interval.											
Check that the labelling is complete.											
Perform a test drive.											

Maintenance - 3000 hours/every two years

At operating hours										Carried out	
3000		6000		9000		12000		15000		✓	✗
Note											
Perform all 1000-hour maintenance work.											
Brake											
Change the brake fluid.											
Hydraulics											
Change the hydraulic oil.											
Replace the return line filter and the breather filter.											
Variant: Replace the high-pressure filter.											

Ordering spare parts and wearing parts

Spare parts are provided by our spare parts service department. The information required for ordering parts can be found in the spare parts list.

Only use spare parts as per the manufacturer's instructions. The use of unapproved spare parts can result in an increased risk of accidents due to insufficient quality or incorrect assignment. Anyone using unapproved spare parts shall assume unlimited liability in the event of damage or harm.

Quality and quantity of the required operating materials

Only the operating materials specified in the maintenance data table may be used.

– The required consumables and lubricants can be found in the maintenance data table.

Oil and grease types of a different quality must not be mixed. This negatively affects the lubricity. If a change between different manufacturers cannot be avoided, drain the old oil thoroughly.

General maintenance information

Before carrying out lubricating work, filter changes or any work on the hydraulic system, carefully clean the area around the part involved.

When topping up working materials, use only clean containers!

Lubrication plan

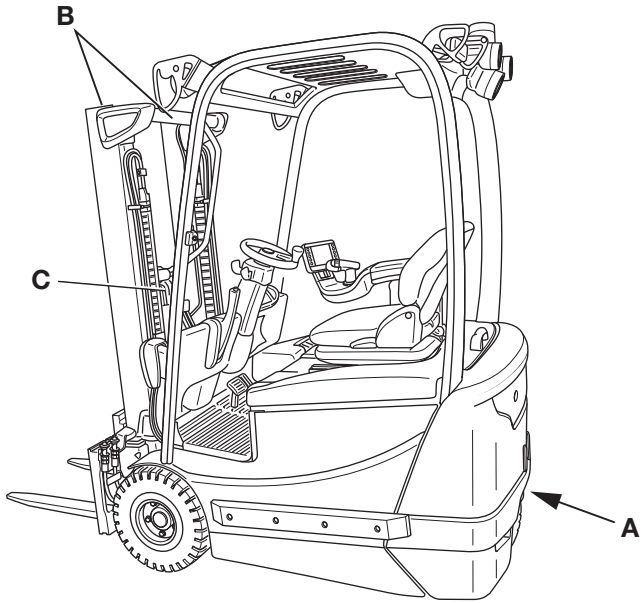

Code[1]	Lubrication point
(A)	One lubricating nipple on the steering turntable
(B)	Sliding surfaces on the lift mast
(C)	Load chains

[1]The respective lubricant specification can be found in the "Maintenance data table" section below, under this Code.
This lubrication plan describes the series-production truck with standard equipment. For maintenance points on variant trucks, see the relevant chapter and/or instructions provided by the manufacturer.

Maintenance data table

General lubrication points

Code	Unit	Operating materials	Specification	Dimension
	Lubrication	High-pressure grease	ID no. 0147873	As required

Battery

Code	Unit	Operating materials	Specification	Dimension
	System filling	Distilled water		As required
	Insulation resistance		DIN 43539 VDE 0510	For further information, refer to the workshop manual for the truck in question.

Electrical system

Code	Unit	Operating materials	Specification	Dimension
	Insulation resistance		DIN EN 1175 VDE 0117	For further information, refer to the workshop manual for the truck in question

Controls/joints

Code	Unit	Operating materials	Specification	Dimension
	Lubrication	High-pressure grease	ID no. 0147873	As required
		Oil	SAE 80 MIL-L2105 API-GL4	As required
	Dual-pedal operation	High-pressure grease	ID no. 0147873	As required

Hydraulic system

Code	Unit	Operating materials	Specification	Dimension
	System filling	Hydraulic oil	HVLP 68 DIN 51524, Part 3	22.8...27.4 l Dependent on the lift mast and overall height
		Hydraulic oil for the food industry	HLP 68 DIN 51524, Part 3	

NOTE

When changing to a different type of hydraulic oil, the authorised service centre must adjust the truck control unit.

Tyres

Code	Unit	Operating materials	Specifications	Dimension
	Superelastic tyres	Wear limit		To wear mark
	Solid rubber tyres	Wear limit		To wear mark
	Pneumatic tyres	Minimum tread depth		Air pressure: see information on truck Min. tread depth: 1.6 mm

Running axle

Code	Unit	Operating materials	Specification	Dimension
	Wheel nuts/screws	Torque wrench		For further information, refer to the workshop manual for the truck in question
	Brake	Brake fluid	ATE DOT 4	

Steering axle/drive axle

Code	Unit	Operating materials	Specifications	Dimension
	Wheel screws	Torque wrench		For further information, refer to the workshop manual for the truck in question
	Wheel gear	Gearbox oil		
(A)	Live ring bearing	Multi-purpose grease	DIN 51825 KPF2	As required

Lift mast

Code	Unit	Operating materials	Specification	Dimension
(B)	Lubrication	High-pressure grease	ID no. 0147873	As required
	Stop	Play		Min. 2 mm
	Screws for the lift mast bearing	Torque wrench		For further information, refer to the workshop manual for the truck in question

Load chains

Code	Unit	Operating materials	Specification	Dimension
(C)	Lubrication	High-load chain spray	Fully synthetic Temperature range: -35°C to +250°C ID no. 0156428	As required

Washer system

Code	Unit	Operating materials	Specification	Dimension
	System filling	Screen wash	Winter, ID no. 172566	As required

Providing access to maintenance points

Removing/installing the valve cover

Removal

NOTE

The hexagon socket wrench that is used to remove the valve cover is also used for emergency lowering.

– Apply the parking brake and switch off the truck.

– Remove the hexagon socket wrench (1) from the cover to the right of the driver's seat. ▷

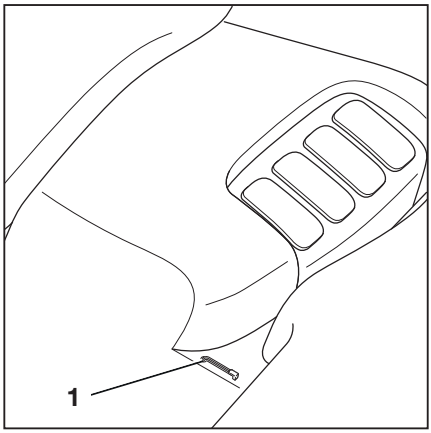

– Loosen the three screws (3) on the panelling (2) and remove the panelling (2). ▷

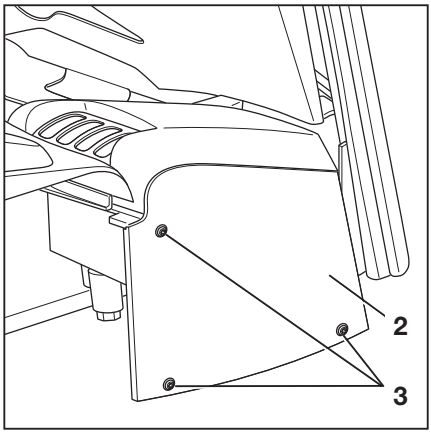

– Remove the three screws on the valve block cover and remove the valve block cover.

▷

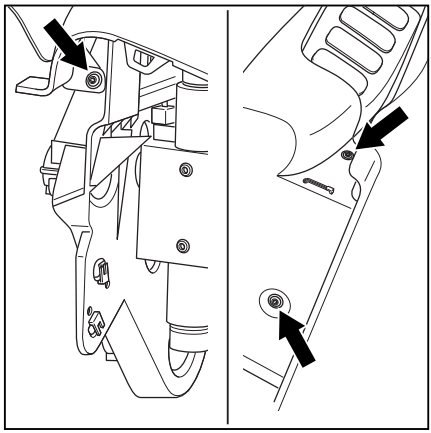

Installation

– Fit the valve block cover, screw in and tighten the screws.

– Fit the panelling (2) and screw it on with three screws (3).

– Stow the hexagon socket wrench (1) safely in the support mounting next to the lever cover.

Removing and installing the bottom plate for single pedal operation

⚠ WARNING

Risk of crushing when closing the bottom plate!

When the bottom plate is closed, there must be no parts of the body between the bottom plate and the edge of the chassis. There is a risk of crushing!

– When closing the bottom plate, ensure that there is nothing between the bottom plate and the edge of the chassis.

⚠ CAUTION

There is a risk of short circuit if cables are damaged.

– Check the connection cables for damage.

– When removing and reinstalling the bottom plate, make sure that the connection cables are not damaged.

Removing the left-hand bottom plate ▷

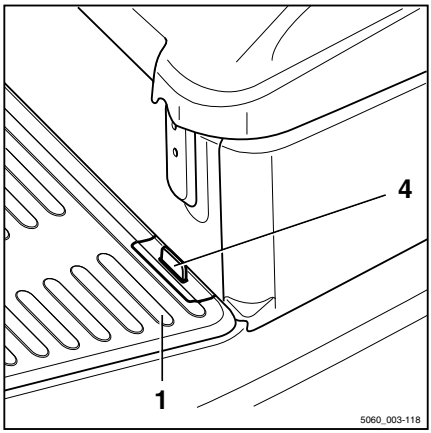

NOTE

The left-hand bottom plate must be removed before the right-hand bottom plate can be removed. The left-hand bottom plate (1) has a gap for gripping with the fingers. The recess is located underneath the rubber covering (4).

– Fold the rubber covering (4) forwards and reach into the recess.

– Lift up the bottom plate (1).

– Remove the bottom plate (1).

Installing the left-hand bottom plate

– Fit the bottom plate (1).

– Close the bottom plate (1).

Removing the right-hand bottom plate ▷

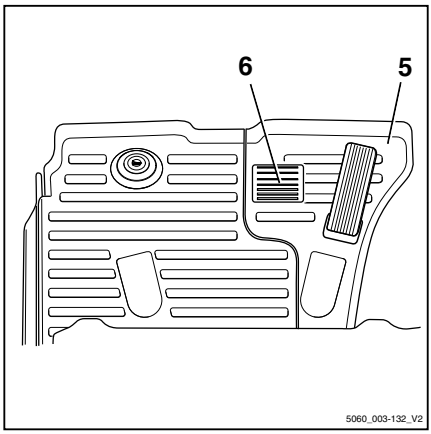

NOTE

The accelerator pedal is attached to the right--hand bottom plate and is removed with the bottom plate. The connecting plug for the accelerator is located underneath the bottom plate.

– Lift the bottom plate (5) forwards and carefully guide it upwards over the brake pedal (6).

– Disconnect the connecting plug from the accelerator.

– Remove the bottom plate.

Installing the right-hand bottom plate

– Fit the bottom plate.

– Connect the connector to the accelerator.

– Lower the bottom plate, carefully guiding it downwards over the brake pedal.

– Close the bottom plate.

Removing and installing the bottom plate for dual pedal operation (variant)

⚠ WARNING

Risk of crushing when closing the bottom plate!

When the bottom plate is closed, there must be no parts of the body between the bottom plate and the edge of the chassis. There is a risk of crushing!

– When closing the bottom plate, ensure that there is nothing between the bottom plate and the edge of the chassis.

⚠ CAUTION

There is a risk of short circuit if cables are damaged.

– Check the connection cables for damage.

– When removing and reinstalling the bottom plate, make sure that the connection cables are not damaged.

Removing the right-hand bottom plate ▷

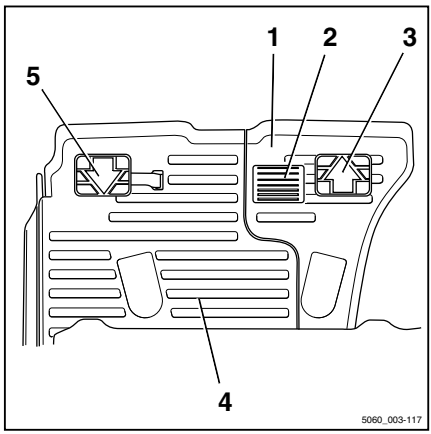

NOTE

The accelerator pedals (3) and (5) are attached to the left-hand bottom plate and are removed with the bottom plate. Due to the design, the right-hand bottom plate must always be removed first.

– Lift the bottom plate (1) forwards and carefully guide it upwards over the brake pedal (2) and the forwards accelerator pedal (3).

– Remove the bottom plate (1).

Installing the right-hand bottom plate

– Fit the bottom plate (1).

– Lower the bottom plate (1), carefully guiding it downwards over the brake pedal (2) and the forwards accelerator pedal (3).

– Close the bottom plate (1).

Removing the left-hand bottom plate

– Lift up the bottom plate (4).
– Disconnect the connecting plug from the accelerator.
– Remove the bottom plate (4).

Installing the left-hand bottom plate

– Fit the bottom plate (4).
– Connect the connecting plug to the accelerator.
– Close the bottom plate (4).

Preserving operational readiness

Lubricating joints and controls

- Oil or grease bearings and joints according to the "maintenance data table".
- Driver's seat guide
- Battery hood hinges
- Battery door hinges
- Actuating rod (1) for valves (with multi-lever operation)

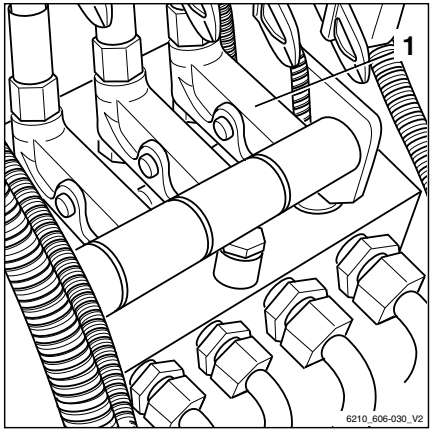

Checking the hood lock

⚠ DANGER

Risk of fatal injury from the battery falling out if the truck tips over!

If the hood lock malfunctions and the truck tips over or is subjected to sharp deceleration, the battery hood can open and the battery can fall out.

- If the hood lock is deformed, damaged or difficult to move, do nicht use the truck.
- Please note the following:

- Always check the hood lock after an accident.
- Check that the hood lock functions reliably.
- All pivot points must be greased and must move easily.
- If the hood lock is deformed, damaged or difficult to move, contact your authorised service centre.

NOTE

The interval for greasing is influenced significantly by the application conditions and the environmental conditions affecting the truck. Visual inspections and function checking of the hood lock must be carried out as required and after every 1000 hours. Grease all moving parts of the hood lock as necessary.

– Open the battery hood (4). ▷
– Check components (1, 2) of the hood lock (3) for ease of movement.
– Grease the lock mechanism.
– Close the battery hood again.

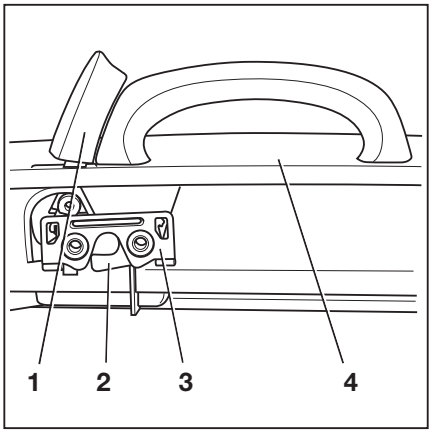

Maintaining the seat belt

DANGER

There is a risk to life if the seat belt fails during an accident!

If the seat belt is faulty, it may tear or open during an accident and no longer keep the driver in the driver's seat. The driver may therefore be hurled against the truck components or out of the truck.

– Ensure operational reliability by continually testing.
– Do not use a truck with a defective seat belt.
– A defective belt must only be replaced by your service centre.
– Only use genuine spare parts.
– Do not make any changes to the belt.

NOTE

Carry out the following checks on a regular basis (monthly). In the case of significant strain, a daily check is necessary.

Checking the seat belt

– Pull out the belt (3) completely and check for wear.

The belt must not be frayed or cut. The stitching must not be loose.

– Check whether the belt is dirty.

– Check whether parts are worn or damaged, including the attachment points.

– Check the buckle (1) to ensure that it locks into place properly.

When the belt tongue (2) is inserted, the belt must be held securely.

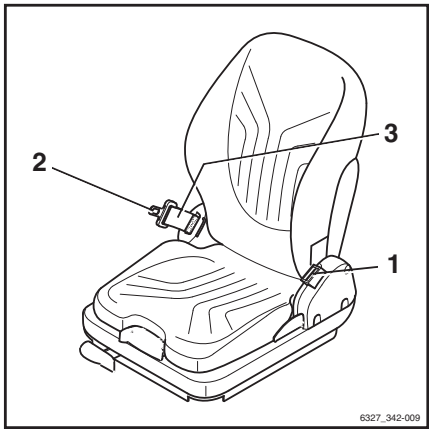

– The belt tongue (2) must release when the red button (4) is pressed.

– The automatic blocking mechanism must be tested at least once a year:

– Park the forklift truck on level ground.

– Pull out the belt with a jerk.

The automatic blocking mechanism must block extension of the belt.

– Tilt the seat at least 30°. In order to do this, open the battery hood fully, see ⇒Chapter "Rear box", Page 323 .

– Slowly extend the belt.

The automatic blocking mechanism must block extension of the belt.

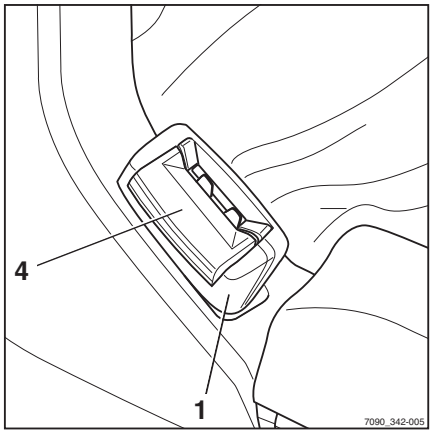

Cleaning the seat belt

– Clean the seat belt as necessary, but without using chemical cleaning materials (a brush will suffice).

Replacement after an accident

As a rule, the seat belt must be replaced after an accident.

Checking the driver's seat

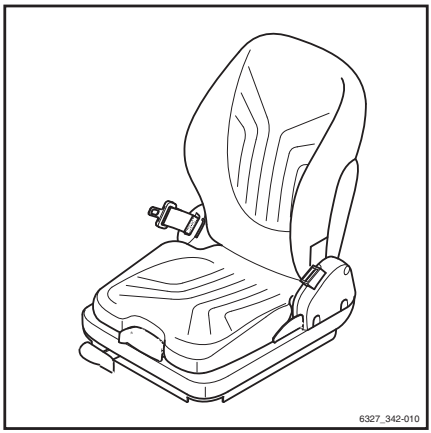

⚠ WARNING

Risk of injury!

– After an accident, check the driver's seat with attached restraining belt and fastening.

– Check the controls for correct operation.

– Check the condition of the seat (e.g. wear on the upholstery) and secure fastening to the hood.

⚠ WARNING

Risk of injury!

– Have the seat repaired by the service centre if you identify any damage during the checks.

Servicing wheels and tyres

⚠ WARNING

Risk of accident due to uneven tyre wear!

The stability of the truck is reduced in the event of unequal tyre wear. The braking distance increases. The handling characteristics deteriorate.

– Change worn or damaged tyres without delay.

– When changing wheels or tyres, ensure that this does not cause the truck to tilt to one side (e.g. always replace right-hand and left-hand wheels at the same time).

⚠ WARNING

Risk of accident due to the use of non-approved wheels.

The quality of the tyres and of the rims affects the stability of the truck. Changes must only be made following consultation with the manufacturer.

Rim parts must never be changed and rim parts from different manufacturers must not be mixed.

– If you wish to use a type of tyre or tyre manufacturer that has not been approved by STILL, obtain approval from STILL prior to use.

– Do not change rim parts and do not mix rim parts from different manufacturers.

Checking the condition and wear of the tyres

▷

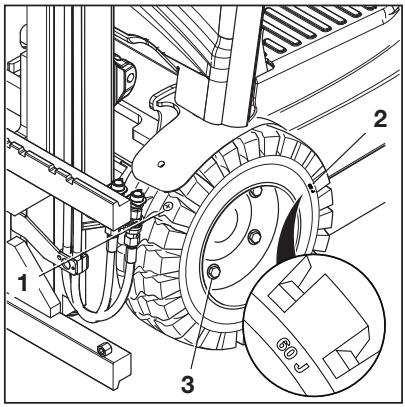

– Remove any foreign bodies embedded in the tyres (1).

The level of wear exhibited by tyres on the same axle must be approximately the same. Superelastic tyres and solid rubber tyres can be worn down to the "60J wear limit" (2).

If the truck is to be used in winter conditions in areas where the StVZO (German Road Traffic Licensing Regulations) applies, the profile must be at least 4 mm.

Superelastic tyres may then only be operated as far as the "60J wear limit" (2) if their profile is re-cut and at least 4 mm deep.

Checking wheel fastenings

– Check that the wheel-fastening screws (3) of the drive axle and the wheel-fastening nuts of the steering axle are securely in place and re-tighten as necessary.

– Note the tightening torques specified in the "workshop manual".

Check the brake fluid level

⚠ WARNING

Risk of injury from becoming trapped in moving parts!

– Observe the safety regulations for working in the front area of the truck; see the section entitled "Working in the front area of the truck" in the chapter entitled "Safety regulations for maintenance".

⚠ WARNING

Brake fluid is hazardous to your health!

– Observe the safety instructions for handling brake fluid, see the section entitled "Brake fluid" in the chapter entitled "Safety regulations for handling consumables".

⚠ WARNING

Risk of accident as a result of a low brake fluid level!

If there is a low brake fluid level, there may be a leakage.

- **Never** top up brake fluid, contact an authorised service centre.
- Have the brake system checked for leaks by an authorised service centre and have any leakage repaired.
- Do not use the truck until the cause has been rectified.

- Check the brake fluid level at the expansion tank (1). ▷

The brake fluid level must be between the MAX and MIN marks.

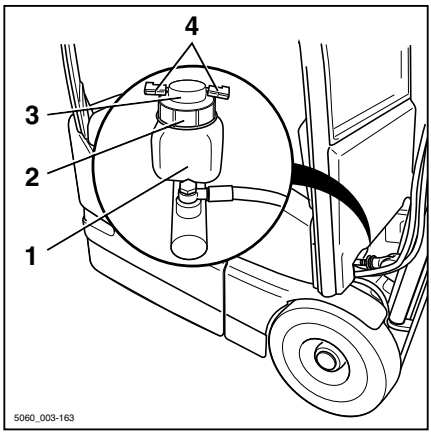

⚠ WARNING

The brake fluid level sensor cables can tear off when the filler cap is opened!

When the filler cap (2) is unscrewed, the cables (4) must not be rotated also, otherwise the cables may tear off. The brake fluid level sensor (3) is stored in the rotatable filler cap and can be held in position when turning the cover.

- Keep the brake fluid level sensor with cables in position and unscrew the cover.
- If necessary, remove the cables before opening the cover and reattach after servicing.

Checking the battery

- For information on checking the battery, see the chapter entitled "Checking the battery condition, acid level and acid density".

Adjusting the warning zone light ▷

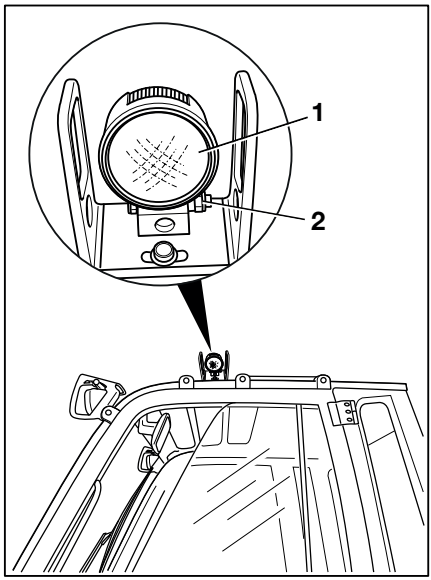

– Switch on the truck.
– Make sure that the parking brake is applied.
– Loosen the nuts (2) to adjust each head-light.
– Adjust the headlight (1).

The distance from the light bar to the truck must be between 70...75 cm.

– Re-tighten the nuts (2).

Replacing the fuses

⚠ DANGER

Danger from electrical current!

High voltages are present in the fuse box. There is a risk of electric shock.

– **Do not** open the fuse box.
– The fuses must be replaced only by the authorised service centre.

Checking the hydraulic system for leak tightness

WARNING

Risk of injury from hydraulic oil under pressure!

Hydraulic oil under pressure can escape from leaking pipes and lines and cause injuries.

– Before checking, release the pressure from the hydraulic system.

– Wear suitable protective gloves, protection goggles etc.

CAUTION

Hydraulic hoses become brittle over time!

– Do not store hydraulic hoses for more than two years.

– Do not use hydraulic hoses for more than two years if they are subject to a high level of wear.

– Comply with the specifications of "DGUV Rule 113-020" within Germany.

– Outside of Germany, observe the national regulations for the country of use.

– Check pipe and hose connection screw joints for leaks (traces of oil).

Replace hose lines if they display the following abnormalities:

- Outer layer has been damaged, or is brittle or cracked
- Leakages
- Deformation (e.g. with blisters or kinks)
- A fitting has come loose
- A fitting is badly damaged or corroded

Replace pipes if they display the following abnormalities:

- Abrasion
- Deformation and bending
- Leakages

Checking the hydraulic oil level

⚠ WARNING

Risk to health from hydraulic oil!

Hydraulic oils are hazardous to your health. During operation, they are pressurised.

– Observe the safety regulations in the chapter "Hydraulic fluid".

NOTE

To check the hydraulic oil level, the hydraulic system must be bled. If there is a noticeable juddering in the hydraulic movements, contact the authorised service centre.

– Drive the truck onto a level and horizontal surface.

– Lower the fork carriage.

– Position the lift mast vertically.

– Park the truck securely.

– Remove the left-hand bottom plate.

– Unscrew the breather filter together with the oil dipstick (1). ▷

– Check the oil level.

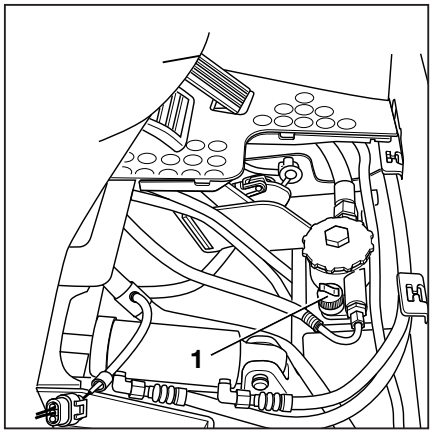

⚠ CAUTION

The maximum oil volume is dependent on the height of the attached lift mast.

The filling quantities vary by depending on the lift mast version. Observe the filling quantities for the height of the lift mast, see the table.

– Do not allow the fill level to be below the corresponding minimum marking.

The markings show the applicable areas for the filling quantities. The filling quantities are dependent on the lift height and the lift mast (see table). ▷

The top marking (max) indicates the maximum filling quantity for all areas.

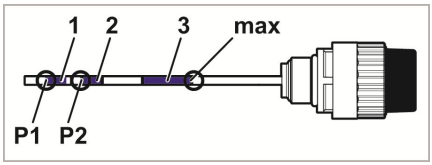

1	Valid area, filling quantity 1
P1	Minimum, filling quantity 1
2	Valid area, filling quantity 2
P2	Minimum, filling quantity 2
3	Valid area, filling quantity 3
max	Maximum for all areas

Marking	Overall height [mm]			Filling quantity [l]
	Telescopic	NiHo	3-way	
1	≤ 3260	≤ 2410	≤ 2060	22.8
2	–	> 2410...≤ 2610	> 2060...≤ 2610	23.7
3	–	–	> 2610...≤ 3260	27.4

NOTE

– If necessary, pour hydraulic oil of the correct specification as specified in the "maintenance data table" into the filler neck.

ENVIRONMENT NOTE

Carefully collect any spilled oil and dispose of it in an environmentally friendly manner and in accordance with the national regulations for the country of use.

– Screw in the breather filter together with the oil dipstick.

– Install the left-hand bottom plate.

Lubricating the lift mast and roller track ▷

– Remove dirt and lubricant residue from the roller track.

– Lubricate the roller tracks (1) of the outside, middle, and inside mast with a super-pressure adhesion lubricant to reduce wear. See ⇒Chapter "Maintenance data table", Page 460 .

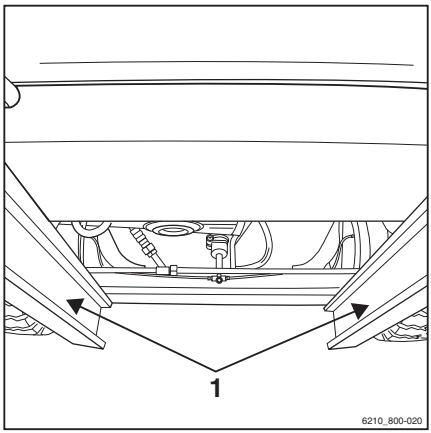

NOTE

Spray the roller track evenly from a distance of approx. 15-20 cm. Wait approx. 15 minutes until the equipment is ready to use again.

1000-hour maintenance/annual maintenance

Other work that must be carried out

– Perform all tasks required to maintain full operability; see the chapter entitled "Remaining ready for operation".

Checking the lift cylinders and connections for leaks

▷

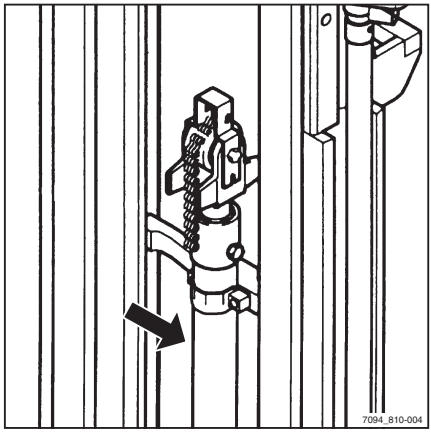

⚠ WARNING

Risk of injury

Observe safety regulations for working on the lift mast, see the "Working at the front of the truck" chapter.

– Check hydraulic connections and lift cylinders for leaks (visual inspection).

– Have leaking screw joints or leaking hydraulic cylinders repaired by the authorised service centre.

Checking the fork arms

▷

– Check the fork arms (1) for any visible deformation. Wear must not amount to more than 10% of the original thickness.

⚠ CAUTION

Risk of component damage!

Always replace worn fork arms in pairs.

– Check that the fork latch (3) is functioning correctly.

– Make sure that the locking screw (2) is present and cannot fall out.

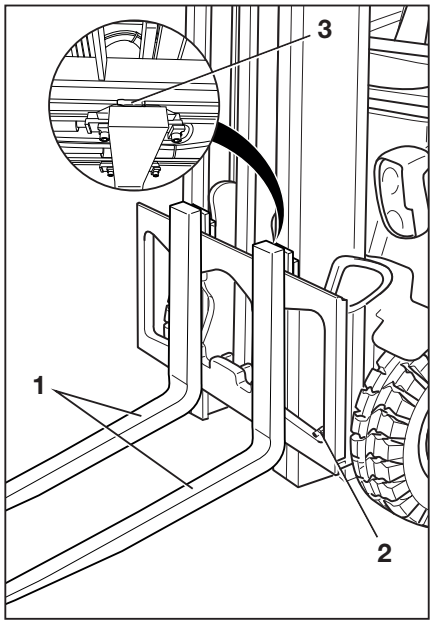

Checking the double pedal

▷

– Remove the floorplate.

– Check that the support and springs of the double pedal mechanism are securely positioned.

– Check that all screws are sealed with locking varnish.

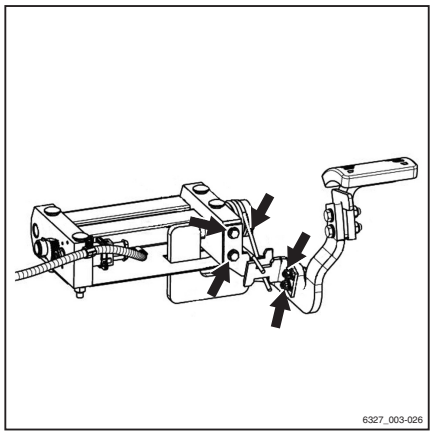

6

Technical data

Ergonomic dimensions

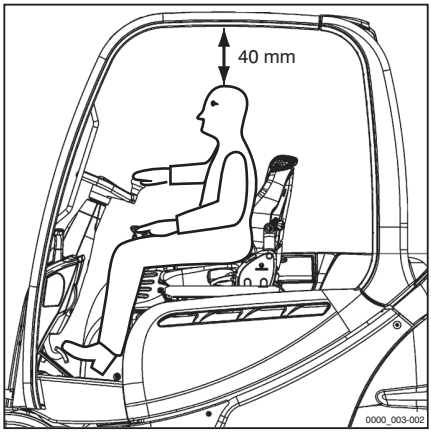

WARNING

Danger of impact injuries to the head!

If the head of the operator is located too close to the underside of the roof, the suspension of the driver's seat or an accident may cause the head to strike the overhead guard.

To avoid head injuries, a minimum distance of **40 mm** must be ensured between the underside of the roof and the head of the tallest operator.

To determine the actual head clearance, the operator must sit in the driver's seat and the seat suspension must be set to this driver's requirements.

Due to the individual nature of height and body weight as well as the wide variety of types of driver's seat and overhead guard, the minimum head clearance must be ensured in every truck.

The driver's compartment has been designed taking ergonomics in the workplace into account and in accordance with EN ISO 3411. In general, from the seat position, the operator has sufficient space to reach the operating devices safely, to operate the truck and to view the outline of the truck. Operators whose body size deviates from the specified dimensions on which EN ISO 3411 is based must be individually considered by the operating company.

Dimensions

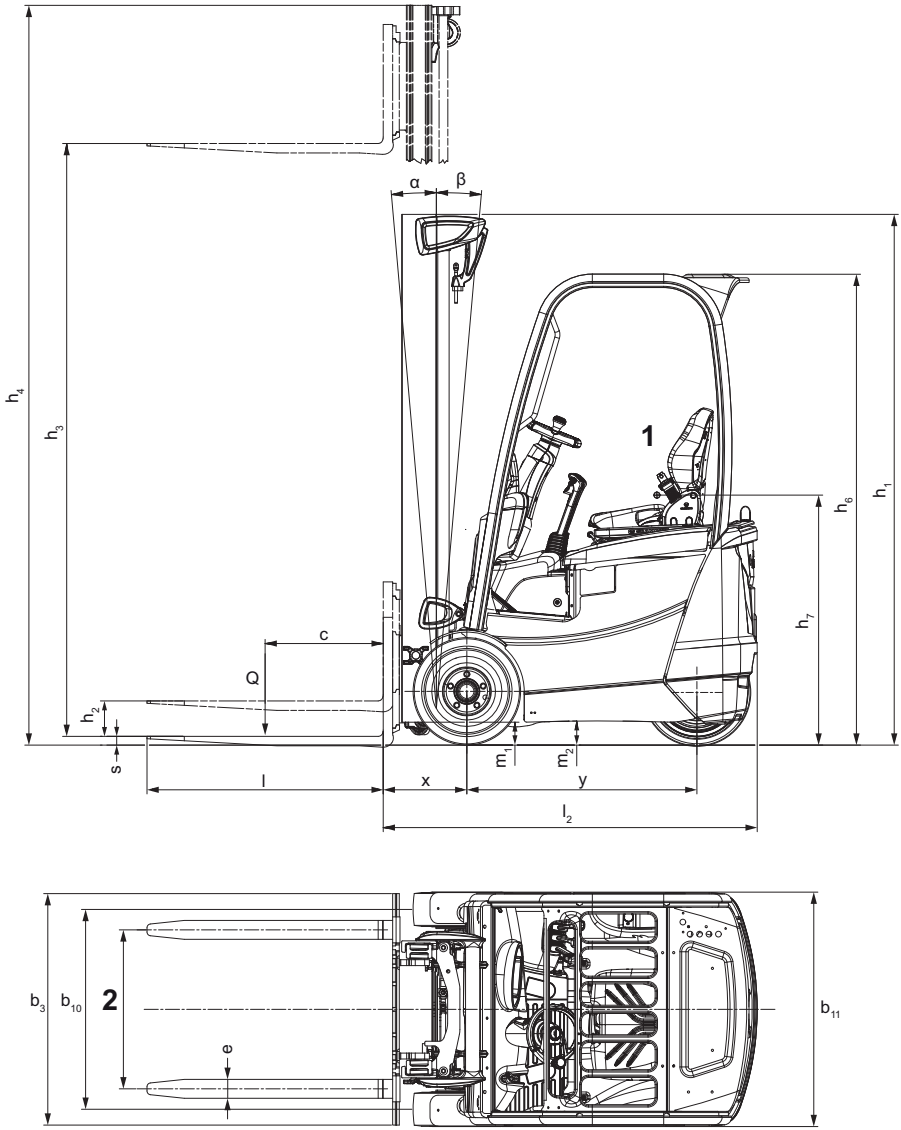

1 Seat is adjustable ± 90 mm

2 Fork spacing is adjustable

NOTE

Measurements h_1, h_3, h_4, h_6 and b_1 are customised and can be taken from the order confirmation.

VDI datasheet

NOTE

This VDI datasheet specifies only the technical values for trucks with standard equipment. Different tyres, lift masts, additional units etc. can produce different values.

Key data

Model		RXE-10	RXE-13	RXE-15	RXE-16C
Type number		**5510**	**5513**	**5515**	**5516**
Manufacturer		STILL GmbH	STILL GmbH	STILL GmbH	STILL GmbH
Drive		Electric	Electric	Electric	Electric
Operation		Seat	Seat	Seat	Seat
Rated capacity/load	Q (kg)	1000	1300	1500	1600
Load centre of gravity distance	c (mm)	500	500	500	500
Load distance	x (mm)	355	355	355	355
Wheelbase	y (mm)	974	1136	1190	1190

Weights

Model		RXE-10	RXE-13	RXE-15	RXE-16C
Type number		**5510**	**5513**	**5515**	**5516**
Net weight including battery	kg	2455	2717	2867	3022
Permissible axle load with front load	kg	2953	3459	3803	3950
Permissible axle load with rear load	kg	502	557	563	672
Front axle load, unladen	kg	1075	1181	1226	1200
Rear axle load, unladen	kg	1380	1536	1641	1822

Wheels, chassis frame

Model		RXE-10	RXE-13	RXE-15	RXE-16C
Type number		**5510**	**5513**	**5515**	**5516**
Tyres		Superelastic	Superelastic	Superelas-tic	Superelas-tic
Tyre size, front		180/70-8	180/70-8	180/70-8	180/70-8
Tyre size, rear		180/60-10	180/60-10	180/60-10	180/60-10

Model		RXE-10	RXE-13	RXE-15	RXE-16C
Type number		**5510**	**5513**	**5515**	**5516**
Number of front wheels (x = driven)		2	2	2	2
Number of rear wheels (x = driven)		1x	1x	1x	1x
Track width, front	b_{10} (mm)	840	840	840	840

Basic dimensions

Model		RXE-10	RXE-13	RXE-15	RXE-16C
Type number		**5510**	**5513**	**5515**	**5516**
Forwards tilt of lift mast/fork carriage	α (degrees)	3°	3°	3°	3°
Backwards tilt of lift mast/fork carriage	β (degrees)	5°	5°	5°	5°
Height with lift mast retracted	h_1 (mm)	2155	2155	2155	2155
Free lift	h_2 (mm)	150	150	150	150
Lift	h_3 (mm)	3170	3170	3170	3170
Height with lift mast extended	h_4 (mm)	3732	3732	3732	3811
Height above overhead guard (cab)	h_6 (mm)	1980	2050	2050	2050
Seat height in relation to SIP	h_7 (mm)	953	953	953	953
Overall length	l_1 (mm)	2384	2546	2600	2635
Length including fork back	l_2 (mm)	1584	1746	1800	1835
Overall width	b_1 (mm)	990	990	990	990
Fork arm thickness	s (mm)	40	40	40	40
Fork arm width	e (mm)	80	80	80	80
Fork arm length	l (mm)	800	800	800	800
Fork carriage	Standard; class; form	ISO 2328 II A	ISO 2328 II A	ISO 2328 II A	ISO 2328 I I A
Fork carriage width	b_3 (mm)	980	980	980	980
Ground clearance with load below lift mast	m_1 (mm)	84	84	84	84
Ground clearance at the middle of the wheelbase	m_2 (mm)	94	94	94	94
Aisle width for pallet 1000 x 1200 crosswise	A_{st} (mm)	2911	3073	3127	3162
Aisle width for pallet 800 x 1200 longitudinal	A_{st} (mm)	3035	3197	3251	3286

Model		RXE-10	RXE-13	RXE-15	RXE-16C
Type number		**5510**	**5513**	**5515**	**5516**
Turning radius	W_a (mm)	1229	1391	1445	1480
Smallest pivot point distance	b_{13} (mm)	0	0	0	0

Performance data

Model		RXE-10	RXE-13	RXE-15	RXE-16C
Type number		**5510**	**5513**	**5515**	**5516**
Driving speed with load	km/h	12	12	12	12
Driving speed without load	km/h	12.5	12.5	12.5	12.5
Lifting speed with load	m/s	0.42	0.36	0.33	0.32
Lifting speed without load	m/s	0.52	0.52	0.52	0.52
Lowering speed with load	m/s	0.51	0.51	0.51	0.51
Lowering speed without load	m/s	0.51	0.51	0.51	0.51
Pulling force with load	N	1911	1947	1729	1676
Pulling force without load	N	2121	2216	2032	2004
Max. pulling force with load	N	2399	3529	3498	4329
Max. pulling force without load	N	6929	7062	7008	7033
Climbing capability with load	%	6.1	4.95	4.4	4
Climbing capability without load	%	9.5	8.4	7.8	7.3
Max. climbing capability with load	%	20.9	17.6	16	14.9
Max. climbing capability without load	%	31	27.56	25.8	24.4
Acceleration time 15 m with load	s	6.9	7	7.7	7.7
Acceleration time 15 m without load	s	6	6.2	6.3	6.6
Service brake		Hydraulic	Hydraulic	Hydraulic	Hydraulic

Gradients

The values specified in the "Performance data" table as the maximum climbing capability can be used only to compare the performance of forklift trucks in the same category. The specified values in no way represent the normal daily operating conditions.

⚠ WARNING

To use the truck safely – with or without a load – the maximum ascending or descending gradient permitted for travel is 15%.

– If you have any questions, contact your authorised service centre.

Electric motor

Model		RXE-10	RXE-13	RXE-15	RXE-16C
Type number		**5510**	**5513**	**5515**	**5516**
Traction motor, power rating S3 60 min	kW	4.9	4.9	4.9	4.9
Lift motor, power rating at S3: 15%	kW	7.6	7.6	7.6	7.6
Battery	Standard; circuit	DIN 43535 A	DIN 43535 A	DIN 43535 A	DIN 43535 A
Battery voltage	U (V)	24	24	24	24
Battery capacity	K_5 (Ah)	500	875	1000	1000
Battery weight	kg	372	600	676	676
Energy consumption in accordance with EN 16796	kWh/h	2.46	2.9	3.1	3.32
Handling performance	t/h	62.6	80.1	90.7	99.4
Energy consumption at handling performance	kWh/h	3.61	4	4.2	4.39

Other

Model		RXE-10	RXE-13	RXE-15	RXE-16C
Type number		**5510**	**5513**	**5515**	**5516**
Working pressure for attachments	bar	170	200	220	220
Oil flow for attachments	l/min	23	20	18	18
Sound pressure level L_{pAZ} (Driver's compartment) [1]	dB (A)	60	60	60	60
Human vibration: acceleration according to EN 13059	m/s^2	0.54	0.54	0.54	0.54
Tow coupling, DIN type/model		—	—	—	—

[1] without the cab; differing values with the cab

Eco-design requirements for electric motors and variable speed drives

All motors in this industrial truck are exempt from Regulation (EU) 2019/1781 because these motors do not meet the description given in Article 2 "Scope", Item (1) (a) and because of the provisions in Article 2 (2) (h) "Motors in cordless or battery-operated equipment" and Article 2 (2) (o) "Motors designed specifically for the traction of electric vehicles".

All variable speed drives in this industrial truck are exempt from Regulation (EU) 2019/1781 because these variable speed drives do not meet the description given in Article 2 "Scope", Item (1) (b).

Battery specifications for lead-acid batteries

⚠ CAUTION

The battery weight and the battery dimensions affect the stability of the truck.

When replacing the battery, the weight ratios must not be changed. The battery weight must remain within the weight range specified on the nameplate. The location of ballast weights must not be changed. The bottom of the battery tray must be closed.

- Use batteries that meet DIN standards.
- Do not change the position of ballast weights.
- Check the battery weight against the information on the nameplate.
- Only use a battery tray that is closed at the bottom.

NOTE

Battery specifications according to DIN 43531; cells in accordance with DIN EN 60254-2, 24 V circuit A

- The battery weight can be found on the nameplate of the battery.

Lead-acid batteries

Battery designation	Capacity [Ah]	Circuit	Weight/ ballast weight [kg]	Battery compartment dimensions [mm]			Tray	Model number
				Length	Width	Height		
4PzV 400	400	A	372	830	273	627	104	5510
4PzV 440	440							
4PzS 500	500							
5PzV 500	500	A	445/ 156	830	327	627	105	5513
5PzV 550	550							
5PzS 625	625							
7PzV 700	700	A	600/ 78	830	435	627	107	5513 5515 5516
7PzV 770	770							
7PzS 875	875							
8PzV 800	800	A	676	830	489	627	315	5516
8PzV 880	880							
8PzS 1000	1000							

Battery specifications for lithium-ion batteries

NOTE

Lithium-ion batteries for trucks with quick charge access are delivered from the factory with shorter battery cables for design reasons. Please note the following:

- *These lithium-ion batteries may be used only in trucks with charging quick access.*
- *Lithium-ion batteries for trucks without charging quick access cannot be used in trucks with charging quick-access.*

– If you have any questions relating to converting existing batteries, contact the authorised service centre.

– For more information, please refer to the nameplate and the operating instructions for the lithium-ion battery.

Li-Ion 24 V 10,6 (BG 22.1)

Type	H9	H9
Battery	2250	2251
Tray	104	104
Nominal voltage [V]	24	24
Nominal capacity [Ah]	372	372
Nominal energy [kWh]	10.6	10.6
Length [mm]	830	830
Width [mm]	273	273
Height [mm]	627	627
Battery heating system	No	Yes
Truck model (type number)	RXE 10 (5510)	RXE 10 (5510)
Ballast weight	No	No

Li-Ion 24 V 14,2 (BG 22.2)

Type	H12	H12
Battery	2252	2253
Tray	104	104
Nominal voltage [V]	24	24
Nominal capacity [Ah]	372	372
Nominal energy [kWh]	14.2	14.2
Length [mm]	830	830
Width [mm]	273	273
Height [mm]	627	627
Battery heating system	No	Yes
Truck model (type number)	RXE 10 (5510)	RXE 10 (5510)
Ballast weight	No	No

Li-Ion 24 V 10,6 (BG 22.1)

Type	H9	H9
Battery	2250	2251
Tray	107	107
Nominal voltage [V]	24	24
Nominal capacity [Ah]	600	600
Nominal energy [kWh]	10.6	10.6
Length [mm]	830	830
Width [mm]	435	435
Height [mm]	627	627
Battery heating system	No	Yes
Truck model (type number)	RXE 13 (5513), RXE 15 (5515), RXE 16C (5516)	RXE 13 (5513), RXE 15 (5515), RXE 16C (5516)
Ballast weight	1	1

Li-Ion 24 V 14,2 (BG 22.2)

Type	H12	H12
Battery	2250	2251
Tray	107	107
Nominal voltage [V]	24	24
Nominal capacity [Ah]	600	600
Nominal energy [kWh]	10.6	10.6
Length [mm]	830	830
Width [mm]	435	435
Height [mm]	627	627
Battery heating system	No	Yes
Truck model (type number)	RXE 13 (5513), RXE 15 (5515), RXE 16C (5516)	RXE 13 (5513), RXE 15 (5515), RXE 16C (5516)
Ballast weight	1	1

A

Access authorisation for the fleet manager. 107
Changing the fleet manager password. 109
Changing the PIN code for the driver. 106
Access authorisation with PIN code. . . . 105
Changing the PIN codes. 106
Accessories. 8
Actuating the drive direction switch
Fingertip version. 154
Joystick 4Plus version. 154
Mini-lever version. 153
Multiple-lever version. 153
Travel direction selector and indicator module version. 155
Address of manufacturer. I
Adjusting the armrest. 100
Adjusting the fork. 205
After cleaning. 434
Assistance systems
Zeroing. 269
Attachments. 287
Adjusting the hydraulic speed. 292
Alternating operation. 288
Assembly. 287
Attachment example. 291
Connection. 289
Controlling using a double mini-lever. 299
Controlling using a quadruple mini-lever. 307
Controlling using a triple mini-lever. . 303
Controlling using multi-lever operation. 297
Controlling using the double mini-lever and the 5th function. 301
Controlling using the joystick 4Plus. . 314
Controlling using the quadruple mini-lever and the 5th function. 309
Controlling using the triple mini-lever and the 5th function. 305
Controlling with the fingertip. 310
Controlling with the fingertip and the 5th function. 312
General controlling. 290
Load capacity. 289
Mounting. 289
Picking up a load. 317
Safety information. 287
Special risks. 39
Automatic mast vertical positioning
Calibrating. 250
Checking for correct function. 250
Operation. 248
Auxiliary equipment. 318

B

Basic principles for safe operation. 31
Battery
Battery maintenance indicator. 399
Changing the battery type. 418
Charging. 393
Charging to equalise. 397
Checking. 472
Checking the charge status. 391
Checking the condition, acid level and acid density. 390
Disposal. 25
Lithium-ion battery. 405
Replace with a C hook. 424
Replacing using roller channel. 419
Safety regulations. 385
Servicing. 389
Battery acid. 51
Battery door
Closing. 355
Opening. 355
Battery heating system. 417
Battery hood
Closing. 357
Opening. 356
Battery male connector
Connecting. 359
Disconnecting. 360
Battery specifications
Lead-acid batteries. 488
Lithium-ion batteries. 489
Before picking up a load
Capacity rating plate. 199
Bottom plate
Installing for dual pedal operation. . . . 465
Installing for single pedal operation. . 463
Removing for dual pedal operation. . . 465
Removing for single pedal operation. 463

Brake fluid. 52
Check the brake fluid level. 471

C

Capacity rating plate. 199
Changes to the truck. 31
Changing the fork arms. 194
Charging the lithium-ion battery. 413
Checking the brake system for correct function. 88
Checking the charge state of the lead-acid battery. 391
Checking the charge state of the lithium-ion battery. 411
Checking the double pedal. 478
Checking the driver's seat. 470
Checking the emergency off function. . . . 85
Checking the fork arms. 478
Checking the hood lock. 467
Checking the lift cylinders and connections for leaks. 477
Checking wheel fastenings. 471
Checks and tasks before daily use. 78
Clamp locking mechanism. 295
Releasing the mechanism with a double mini-lever. 300
Releasing the mechanism with a quadruple mini-lever. 308
Releasing the mechanism with a triple mini-lever. 304
Releasing the mechanism with the fingertip. 311
Releasing the mechanism with the joystick 4Plus. 315
Cleaning the electrical system. 433
Cleaning the truck. 431
Climbing into the truck. 82
Climbing out of the truck. 82
Clipboard. 322
Commissioning. 14
Condition of the roadways. 148
Conformity marking. 6
Consumables. 49
Brake fluid safety information. 52
Disposal. 54
Safety information for handling battery acid. 51
Safety information for handling oils. . . 49
Safety information for hydraulic fluid. . 50
Contact details. I
Copyright and trademark rights. 20
Correct seat position. 83
Crane loading. 439
Cruise control. 168
Cup holders. 63
Curve Speed Control. 165

D

Damage. 34
Danger area. 205
Danger to employees. 44
Declaration of conformity. 7
Decommissioning the truck. 440
Defects. 34
Definition of directions. 23
Definition of responsible persons. 28
Description of the truck. 2
Dimensions. 481
Dimensions of roadways. 147
Display-operating unit. 64
Messages. 335
Display/control unit
Main screen. 101
Disposal
Battery. 25
Components. 25
Double mini-lever
Lifting/lowering the fork carriage. 182, 184
Tilting the lift mast. 182, 184
Drive direction
Changing. 156
Neutral position. 152
Selecting. 152
Selecting with the dual pedal version. 159
Drive modes
Sprint mode. 143
STILL Classic. 143
Drive programme
Configuring A/B. 150
Selecting 1 to 3. 149
Selecting A/B. 150
Driver profiles
Creating. 127
Deleting. 131

Description. 125
Renaming. 128
Selecting. 125
Driver rights, duties and rules of behaviour. 29
Drivers. 29
Driver's cab
Use. 87
Driving. 145
Descending gradients. 216
Gradients. 216
Driving lights
Switching on and off. 134
Driving on gradients. 147
Driving on loading bridges. 218
Driving onto lifts. 217
Due date counter for maintenance and safety checks. 449
Dynamic Load Control 1. 255
Dynamic Load Control 2. 256

E

Easy Target. 224
Configuration. 225
Defining the lift heights by entering them. 225
Operation. 228
Placing the load in stock. 229
Removing the load from stock. 231
EC declaration of conformity in accordance with the Machinery Directive. 7
eEasy Target
Defining the lift heights by approaching. 227
Efficiency and drive modes. 143
Electrical fork wear protection. 245
Emergencies
Truck tipping over. 347
Emergency drive direction. 347
Emergency driving. 347
Emergency lowering. 349
Emergency shutdown. 346
Emissions. 55
Battery. 57
Noise emissions. 55
Radiation. 57
Vibrations. 56
Environmental considerations. 25
Ergonomic dimensions. 480

F

Filling the washer system. 320
Fingertip
Lifting/lowering the fork carriage. 188
Tilting the lift mast. 188
Fire extinguisher. 322
First-aid measures for working with lithium-ion batteries
Maintenance personnel. 405
Fitting attachments. 287
FleetManager. 318
Shock recognition. 318
Foreword. 0
Fork arms
Length. 37
Fork wear protection. 193
Function checking. 78
Function checking of the assistance systems. 83
Fuses
Replacing. 473

G

General. 5

H

Handling gas springs and accumulators. . 36
Handling loads. 199
Hazardous areas. 149
Hazards and countermeasures. 42
Hazard warning system
Switching on and off. 138
Hydraulic blocking function. 197
Hydraulic fluid. 50
Hydraulic system
Checking for leak tightness. 474
Checking the hydraulic oil level. 475
Depressurising using a double mini-lever. 276
Depressurising using a quadruple mini-lever. 280
Depressurising using a triple mini-lever. 278
Depressurising using multi-lever operation. 275

Depressurising using the double mini-lever and the 5th function. 277
Depressurising using the fingertip. . . 282
Depressurising using the fingertip and the 5th function. 283
Depressurising using the Joy-stick 4Plus. 284
Depressurising using the Joystick 4Plus and the 5th function. 285
Depressurising using the quadruple mini-lever and the 5th function. 281
Depressurising using the triple mini-lev-er and the 5th function. 279
Exiting the wizard. 286
Need to depressurise. 272
Special feature for clamping attach-ments. 286
Wizard for depressurising. 272

I

Illustration of a lithium-ion battery. 408
Improper use. 14
Information about the documentation. . . . 18
Information for carrying out maintenance. 447
Maintenance timeframe. 448
Next maintenance interval. 448
Insulation testing. 46
Drive battery test values. 47
Test values for the truck. 47
Insurance cover on company premises. . . 31
Intended use. 14

J

Jacking up. 445
Joystick 4Plus
Fork carriage sideshift. 191
Lifting/lowering the fork carriage. 190
Tilting the lift mast. 190

L

Labelling points. 10
Lashing down. 438
Li-Ion ready. 429
Lift height-dependent assistance systems
Electrical fork wear protection. 245
End lift cut-out. 237
Lift mast end-stop damping. 237
Lift transition damping. 236
Speed reduction when the fork carriage is raised. 240
Lift height-dependent functions
Intermediate lift cut-out. 232
Lift height display. 224
Lift height measuring system. 220
Cleaning. 221
Design and function. 220
Eliminating malfunctions. 222
Emergency operation in the event of malfunctions. 223
Lift height preselection
Easy Target. 224
Lifting. 176, 445
Lifting system
Controlling using a double mini-lever. 181
Controlling using a quadruple mini-lev-er. 185
Controlling using a triple mini-lever. . 183
Controlling using the joystick 4Plus. . 188
Controlling with the fingertip. 187
Dynamics. 191
Multi-lever. 179
Operating devices. 177
Lift mast
Lubricating the roller track. 476
Removing. 446
Securing against falling off. 446
Securing against tilting backwards. . . 446
Lift mast versions. 176
NiHo lift mast. 177
Telescopic lift mast. 176
Triple mast. 177
Lighting. 133
Meaning of the symbols. 133
Retrofitting. 133
STILL SafetyLight®. 140
Still Safety Light® 4Plus. 140
StVZO equipment. 139
Warning zone light and warning zone light plus. 141
List of abbreviations. 21
Lithium-ion batteries
Battery heating system. 417
Battery weight and dimensions. 407
Changing the battery type. 418

Charging. 413
Checking the charge state. 411
Fire protection measures. 406
First-aid measures. 405
Illustration. 408
Installing. 427
Maintenance personnel. 405
Regulations for storing. 409
Safety regulations. 405, 407
Lithium-ion battery
Li-Ion ready. 429
Load
Determining visibility conditions when driving with a load. 212
Driving. 213
Picking up. 208
Setting down. 214
Load-dependant assistance systems
Load measurement. 259
Overload detection. 253
Precision load measurement. 262
Total load. 266
Load-dependent assistance systems
Dynamic Load Control 1. 255
Dynamic Load Control 2. 256
Tare function. 264
Load chains
Cleaning. 434
Load measurement. 259
Calibrating. 260
Load programs
Selecting 1 to 3. 192
Lubricating joints and controls. 467

M

Main display. 101
Maintenance
General information. 447
Safety regulations. 444
Maintenance data table. 460
Battery. 460
Controls/joints. 460
Drive axle. 461
Electrical system. 460
General lubrication points. 460
Hydraulic system. 460
Lift mast. 461
Load chains. 461
Running axle. 461
Tyres. 461
Washer system. 461
Maintenance personnel for batteries. . . . 447
Maintenance work without special qualifications. 447
Malfunctions during lifting mode. 196
Mast tilt angle display. 248
Medical equipment. 36
Messages
About operation. 335
About the truck. 344
Introduction. 335
Misuse of safety systems. 34
MSG 65 and MSG 75 driver's seat
Adjusting. 92
Adjusting the backrest extension. 96
Adjusting the longitudinal horizontal suspension. 95
Adjusting the lumbar support. 95
Adjusting the seat backrest. 93
Adjusting the seat suspension (MSG 65/MSG 75). 94
Moving. 93
Switching the seat heater on and off. . 96
MSG 75 E driver's seat
Adjusting the seat suspension. 94
Multi-lever
Lifting/lowering the fork carriage. 180
Tilting the lift mast. 180

N

Nameplate. 11
Neutral position. 152

O

Oils. 49
On-board charger
Changing the battery type. 370
Charging characteristic curve. 371
Charging current limitation. 373
Charging start time. 372
Charging the battery. 374
Compatible batteries. 383
Configuring. 370
General. 368
Maintenance charge. 373

Performance data. 383
Regularly testing the electrical safety. . 48
Operating
Display-operating unit. 104
Operating company. 28
Operating devices and display elements. . 64
Operating devices for hydraulic and driving functions
Double mini-lever. 67
Fingertip. 73
Joystick 4Plus. 74
Multi-lever operation. 66
Quadruple mini-lever. 71
Triple mini-lever. 69
Operating instructions
Issue date. 20
Operating materials
Quality and quantity. 457
Operating procedures. 24
Operating the service brake. 159
Operating the signal horn. 86
Ordering spare parts and wearing parts. 457
Overhead guard
Drilling. 33
Roof loads. 33
Welding. 33
Overview. 60
Accessories. 8
Overviews
Cup holder. 63
Display-operating unit. 64
Driver's compartment. 62
Emergency off switch. 65
Shelf. 63

P

Packaging. 25
Parking. 173
Parking brake
Actuating. 161
Parking the truck securely. 173
Personnel qualifications. 447
Picking up loads. 204
Place of use. 15
Pre-Shift Check
All questions. 113
Description. 111
History. 116
Process. 112
Question sequence. 114
Shift start. 118
Truck restrictions. 122
Precision load measurement. 262
Procedure if truck tips over. 347
Procedure in emergencies. 346
Prohibition of use by unauthorised persons. 30

Q

Quadruple mini-lever
Lifting/lowering the fork carriage. 186
Tilting the lift mast. 186
Quick charge access. 362

R

Rear box. 323
Reducing speed when turning. 165
Regular inspections. 46
Regulations for storing lithium-ion batteries. 409
Replacing the battery
General information. 418
Lithium-ion battery. 427
Residual dangers. 38
Residual risk. 38
Residual risks. 38
Retrofitting. 31
Retrofitting lighting equipment. 133
Roadways. 147, 148, 149
Components protruding beyond the truck contour. 148
Rotating beacon
Switching on and off. 140
Rules for roadways and the working area. 148
Run-on time for additional devices. 320

S

Safety devices. 445
Safety inspection. 46
Safety regulations for handling consumables. 49
Safety regulations for handling lithium-ion batteries. 405
Battery weight and dimensions. 407
Fire protection measures. 406
Maintenance personnel. 405

Safety regulations for handling loads. . . . 199
Safety regulations for handling the battery. 385
Battery manufacturers and battery cables. 388
Battery weight and dimensions. 387
Damage to cables and battery male connectors. 388
Fire protection measures. 386
Lifting accessories. 387
Maintenance personnel. 385
Safety regulations for maintenance
General information. 444
Safety devices. 445
Set values. 445
Working on the electrical equipment. 444
Working on the hydraulic equipment. 444
Safety regulations for working on the lift mast. 446
Safety regulations for working with lithium-ion batteries. 407
Safety regulations when driving. 145
Safety tests. 46
Schematic views. 24
Scope of the documentation. 18
CO solutions. 19
Seat belt. 97
Checking. 469
Cleaning. 469
Fastening. 97
Fastening on a steep slope. 99
Maintaining. 468
Malfunction due to cold. 99
Replacement after an accident. 469
Unlocking. 99
Serial number. 12
Set values. 445
Shelf. 63
Shock recognition. 318
Signal terms. 21
Spare parts list. II
Special risks. 39
Speed restriction
Configuring. 166
Switching on and off. 166
Sprint mode
Automatic switch-off. 143
Switching on and off. 143
Stability. 39
Starting drive mode. 155
Dual pedal version. 157
Steering. 164
Steering system
Checking for correct function. 91
Storing the truck. 440
StVZO (Road Traffic Licensing Regulations) information. 13
Switching off the truck. 173
Switching on
using the key switch. 101
via the push button. 102

T

Tare function. 264
Technical data
Dimensions. 481
VDI datasheet. 483
Tilt-angle-dependent assistance systems
Automatic mast vertical positioning. . 248
Tilt angle-dependent assistance systems
Mast tilt angle display. 248
Tilt end stop damping. 248
Tilt end stop damping. 248
Total load. 266
Towing. 352
Procedure. 353
Safety information. 352
Transport. 436
Transporting pallets. 206
Transporting suspended loads. 207
Travel direction selector and indicator module. 75
Turn indicators
Switching on and off. 136
Tyres
Safety principles. 35

U

Unlock the emergency off switch. 85
Use after storage or decommissioning. . 442
Using the truck. 14
Using working platforms. 17

V

Valve cover
- Dismantling. 462
- Installation. 462

Variants
- Access authorisation for the fleet manager. 107
- Access authorisation with PIN code. . 105
- Automatic mast vertical positioning. . 248, 250
- Battery maintenance indicator. 399
- Battery replacement using roller channel. 419
- Battery replacement with a C hook. . . 424
- Charging quick-access. 362
- Clamp locking mechanism. 295
- Clipboard. 322
- Cruise control. 168
- Driver profiles. 125
- Dynamic Load Control 1. 255
- Dynamic Load Control 2. 256
- Easy Target. 224
- Electrical fork wear protection. 245
- End lift cut-out. 237
- Fire extinguisher. 322
- FleetManager. 318
- Fork wear protection. 193
- Intermediate lift cut-out. 232
- Lift height display. 224
- Lifting systems. 176
- Lift mast end-stop damping. 237
- Lift transition damping. 236
- Load measurement. 259
- Mast tilt angle display. 248
- NiHo lift mast. 177
- On-board charger. 368
- Optical lift height measuring system. . 220
- Overload detection. 253
- Pre-Shift Check. 111
- Precision load measurement. 262
- Rear box. 323
- Shock recognition. 318
- Speed reduction when the fork carriage is raised. 240
- Speed restriction. 166
- STILL SafetyLight® and STILL SafetyLight 4Plus®. 140
- Switching on via the push button (variant). 102
- Tare function. 264
- Tilt end stop damping. 248
- Total load. 266
- Travel direction selector and indicator module. 75
- Triple mast. 177
- Warning zone light and warning zone light plus. 141
- Wheel chock. 175
- Windscreen wipers and washers. . . . 319

VDI datasheet. 483

View of functions and operating procedures. 24

View of operating procedures. 24

Views of the display and operating unit. . . 24

Visibility when driving with a load. 212

Visual inspections. 78

W

Warming up the hydraulic oil. 90

Warning regarding non-original parts. . . . 33

Warning zone light
- Adjusting. 473

Wedging the wheels. 437

Wheel chock. 175

Wheels and tyres
- Checking the condition and wear of the tyres. 471
- Checking wheel fastenings. 471
- Maintaining. 470
- Usage in winter weather conditions. . 471

Windscreen wipers and washers
- Switching on and off. 319

Winter tyres. 471

Working at the front of the truck. 446

Working on the electrical equipment. . . . 444

Working on the hydraulic equipment. . . . 444

Working spotlight for reverse travel
- Switching on and off. 136

Working spotlights
- Switching on and off. 135

Y

Your truck. 2

Z

Zeroing the assistance systems. 269

STILL GmbH

55048015301 EN - 07/2024 - 08