Original instructions

# Electric truck

RX60 25-35
RX60 25-35/Li-Ion

6301 6302 6304 6305 6307 6308
6309

56378011501 EN - 12/2023 - 17

first in intralogistics

## Address of manufacturer and contact details

STILL GmbH
Berzeliusstraße 10
22113 Hamburg, Germany
Tel. +49 (0) 40 7339-0
Fax: +49 (0) 40 7339-1622
Email: info@still.de
Website: http://www.still.de

## Rules for the operating company of industrial trucks

In addition to these operating instructions, a code of practice containing additional information for the operating companies of industrial trucks is also available.

This guide provides information for handling industrial trucks:

- Information on how to select suitable industrial trucks for a particular area of application
- Prerequisites for the safe operation of industrial trucks
- Information on the use of industrial trucks
- Information on transport, initial commissioning and storage of industrial trucks

### Internet address and QR code

The information can be accessed at any time by pasting the address **https://m.still.de/vdma** in a web browser or by scanning the QR code.

## Spare parts list

You can request to download the spare parts list by copying and pasting the address **https://sparepartlist.still.eu** into a web browser or by scanning the QR code shown to the side.

On the web page, enter the following password: **Spareparts24!**

On the next screen, enter your email address and truck serial number to receive an email with the link and download the spare parts list.

2511

# 1 Foreword

**Your truck** . . . . . 2
Description of the truck . . . . . 2
General . . . . . 5
Conformity marking . . . . . 6
Declaration that reflects the content of the declaration of conformity . . . . . 7
Accessories . . . . . 8
Labelling points . . . . . 10
Nameplate . . . . . 13
Serial number . . . . . 14
StVZO (Road Traffic Licensing Regulations) information . . . . . 15
Nameplate of a lithium-ion battery . . . . . 15

**Using the truck** . . . . . 17
Commissioning . . . . . 17
Intended use . . . . . 17
Proper use during towing . . . . . 17
Improper use . . . . . 18
Place of use . . . . . 18
Parking in temperatures below -10 °C . . . . . 20
Using working platforms . . . . . 20

**Information about the documentation** . . . . . 21
Scope of the documentation . . . . . 21
Supplementary documentation . . . . . 22
Issue date and topicality of the operating instructions . . . . . 23
Copyright and trademark rights . . . . . 23
Explanation of signal terms used . . . . . 24
List of abbreviations . . . . . 24
Definition of directions . . . . . 26
Schematic views . . . . . 27

**Environmental considerations** . . . . . 28
Packaging . . . . . 28
Disposal of components and batteries . . . . . 28

# 2 Safety

**Definition of responsible persons** . . . . . 30
Operating company . . . . . 30
Specialist . . . . . 30
Drivers . . . . . 31

**Basic principles for safe operation** . . . 33
Insurance cover on company premises . . . 33
Special notes for using lithium-ion batteries . . . 33
Product-specific dangers posed by the lithium-ion battery . . . 36
Modifying and retrofitting . . . 37
Changes to the overhead guard and roof loads . . . 39
Warning regarding non-original parts . . . 39
Damage, defects and misuse of safety systems . . . 40
Tyres . . . 40
Medical equipment . . . 42
Exercise caution when handling gas springs and accumulators . . . 42
Length of the fork arms . . . 43

**Residual risk** . . . 44
Residual dangers, residual risks . . . 44
Special risks associated with using the truck and attachments . . . 45
Overview of hazards and countermeasures . . . 48
Danger to employees . . . 50

**Safety tests** . . . 52
Carrying out regular inspections on the truck . . . 52
Insulation testing . . . 52
Regularly testing the electrical safety . . . 54

**Safety regulations for handling consumables** . . . 55
Permissible consumables . . . 55
Oils . . . 55
Hydraulic fluid . . . 56
Battery acid . . . 57
Disposal of consumables . . . 58

**Emissions** . . . 59

## 3 Overviews

**Overview** . . . 64

**Driver's compartment** . . . 66

**Shelf and cup holder** . . . 67

**Operating devices and display elements** . . . 68
Display-operating unit "STILL Easy Control" . . . 68
Lithium-ion battery display . . . 70
Emergency off switch . . . 70
Multi-lever operation . . . 71
Double mini-lever . . . 72
Triple mini-lever . . . 72

Quadruple mini-lever . . . . . 76
Fingertip. . . . . 78
Joystick 4Plus . . . . . 79
Travel direction selector and indicator module (variant) . . . . . 80

## 4 Operation

**Checks and tasks before daily use** . . . . . 82
Visual inspections and function checking . . . . . 82
Climbing into and out of the truck . . . . . 85
Climbing in and out of trucks when the driver's compartment is raised (variant) . . . . . 87
Adjusting the driver's seat and armrest . . . . . 88
Adjusting the steering column . . . . . 89
Adjusting the swivelling display-operating unit . . . . . 89
Function checking of the assistance systems . . . . . 90
Unlock the emergency off switch. . . . . 91
Checking the emergency off function . . . . . 91
Operating the signal horn . . . . . 92
Driver's cab . . . . . 93
Checking the brake oil level. . . . . 93
Checking the brake system for correct function . . . . . 96
Warming up the hydraulic oil at cold ambient temperatures . . . . . 98
Checking the steering system for correct function. . . . . 99

**Driver's seat** . . . . . 100
Adjusting the MSG 65 and MSG 75 driver's seat . . . . . 100
Adjusting the MSG 75 E driver's seat . . . . . 106
Adjusting the MGS 95 driver's seat . . . . . 111
Seat belt . . . . . 117
Adjusting the armrest. . . . . 120

**Switching on** . . . . . 122
Switching on using the key switch . . . . . 122
Switching on via push button (variant). . . . . 123

**Display-operating unit** . . . . . 125
Operating the display-operating unit . . . . . 125
Alternative position of the display-operating unit (variant). . . . . 126
Access authorisation with PIN code (variant) . . . . . 128
Access authorisation for the fleet manager (variant) . . . . . 129

**Pre-Shift Check** . . . . . 134
Description of the Pre-Shift Check (variant) . . . . . 134
Process . . . . . 135
All questions . . . . . 136
Defining the question sequence . . . . . 137

Displaying the history . . . 139
Defining the shift start . . . 141
Resetting the truck restrictions . . . 145

**Driver profiles** . . . 148
Driver profiles (variant) . . . 148
Selecting driver profiles . . . 148
Creating driver profiles . . . 150
Renaming driver profiles . . . 152
Deleting driver profiles . . . 155

**Lighting** . . . 157
Retrofitting lighting equipment . . . 157
Meaning of the symbols . . . 157
Driving lights . . . 158
Working spotlights . . . 158
Working spotlight for reverse travel (variant) . . . 160
Turn indicators . . . 160
Hazard warning system . . . 162
StVZO equipment . . . 163
Rotating beacon . . . 164
STILL SafetyLight® and STILL SafetyLight 4Plus® (variants) . . . 164
Warning zone light and warning zone light plus (variants) . . . 165

**Efficiency and drive modes** . . . 167
Blue-Q (variant) . . . 167
Switching Blue-Q on and off . . . 169
Configuring Blue-Q . . . 170
STILL Classic and sprint mode . . . 170

**Driving** . . . 172
Safety regulations when driving . . . 172
Roadways . . . 174
Selecting drive programmes 1 to 3 . . . 177
Selecting drive programme A or B . . . 177
Configuring drive programmes A and B . . . 178
Selecting the drive direction . . . 180
Actuating the drive direction switch with the multiple-lever version . . . 181
Actuating the drive direction switch with the mini-lever version . . . 181
Actuating the drive direction switch with the Fingertip version . . . 181
Actuating the vertical rocker button for the "drive direction" with the Joystick 4Plus version . . . 182
Actuating the drive direction selection lever with the travel direction selector and indicator module version . . . 183
Starting drive mode . . . 183
Starting drive mode, dual pedal version (variant) . . . 185

Operating the service brake . . . 187
Actuating the electric parking brake . . . 189
Malfunctions in the electric parking brake . . . 193
Steering . . . 197
Reducing speed when turning (Curve Speed Control) . . . 198
Speed reduction when the cab door is open . . . 199
Speed restriction (variant) . . . 200
Cruise control (variant) . . . 202

**Parking** . . . 207
Parking the truck securely and switching it off . . . 207
Wheel chock (variant) . . . 209

**Lifting** . . . 210
Lifting system variants . . . 210
Lift mast versions . . . 210
Operating devices for the lifting system . . . 211
Controlling the lifting system using multi-lever operation . . . 213
Controlling the lifting system using a double mini-lever . . . 215
Controlling the lifting system using a triple mini-lever . . . 217
Controlling the lifting system using a quadruple mini-lever . . . 219
Controlling the lifting system using the Fingertip . . . 219
Controlling the lifting system using the Joystick 4Plus . . . 222
Dynamics of the hydraulic movements . . . 224
Selecting load programs 1 to 3 . . . 225
Fork wear protection (variant) . . . 226
Changing the fork arms . . . 227
Fork extension (variant) . . . 229
Operation with reversible fork arms (variant) . . . 231
Malfunctions during lifting mode . . . 232
Hydraulic blocking function . . . 233

**Handling loads** . . . 235
Safety regulations when handing loads . . . 235
Capacity rating plate . . . 235
Picking up loads . . . 240
Danger area . . . 241
Transporting pallets . . . 242
Transporting suspended loads . . . 243
Picking up a load . . . 244
Determining visibility conditions when driving with a load . . . 248
Transporting loads . . . 249
Shake function (variant) . . . 250
Setting down a load . . . 254
Driving on ascending and descending gradients . . . 256

Driving onto lifts . . . 257
Driving on loading bridges . . . 258

**Lift height-dependent assistance systems** . . . 259
Optical lift height measuring system (variant) . . . 259
Lift height display (variant) . . . 263
easy Target (variant) . . . 263
Configuring easy Target . . . 264
Operating easy Target . . . 267
Intermediate lift cut-out (variant) . . . 271
Lift transition damping (variant) . . . 276
Lift mast end-stop damping (variant) . . . 276
End lift cut-out (variant) . . . 277
Speed reduction when the fork carriage is raised (variant) . . . 280
Electrical fork wear protection (variant) . . . 285

**Tilt angle-dependent assistance systems** . . . 288
Mast tilt angle display (variant) . . . 288
Tilt end stop damping (variant) . . . 288
Automatic mast vertical positioning (variant) . . . 288
Function checking of the automatic mast vertical positioning function (variant) . . . 290
Calibrating the automatic mast vertical positioning . . . 288

**Load-dependant assistance systems** . . . 293
Overload detection (variant) . . . 293
Dynamic Load Control 1 (variant) . . . 293
Dynamic Load Control 2 (variant) . . . 293
Load measurement (variant) . . . 299
Calibrating the load measurement . . . 300
Precision load measurement (variant) . . . 302
Tare function (variant) . . . 304
Total load (variant) . . . 306

**Zeroing the assistance systems** . . . 309
Zeroing process . . . 309

**Depressurising the hydraulic system** . . . 312
Need to depressurise the hydraulic system . . . 312
Wizard for depressurising the hydraulic system . . . 313
Depressurising the hydraulic system using multi-lever operation . . . 315
Depressurising the hydraulic system using multi-lever operation and the 5th and 6th function . . . 316
Depressurising the hydraulic system using a double mini-lever . . . 317
Depressurising the hydraulic system using the double mini-lever and the 5th function . . . 318
Depressurising the hydraulic system using a triple mini-lever . . . 319
Depressurising the hydraulic system using the triple mini-lever and the 5th function . . . 320

Depressurising the hydraulic system using a quadruple mini-lever . . . . . 321
Depressurising the hydraulic system using the quadruple mini-lever and the 5th function . . . . . 322
Depressurising the hydraulic system using the Fingertip . . . . . 323
Depressurising the hydraulic system using the Fingertip and the 5th function . . . . . 324
Depressurising the hydraulic system using the Joystick 4Plus . . . . . 325
Depressurising the hydraulic system using the Joystick 4Plus and the 5th function . . . . 326
Special feature for clamping attachments . . . . . 327
Exiting the wizard . . . . . 328

**Attachments** . . . . . 329
Fitting attachments . . . . . 329
General instructions for controlling attachments . . . . . 332
Attachment example for the connection of the auxiliary hydraulics . . . . . 333
Adjusting the hydraulic speed for attachments . . . . . 333
Clamp locking mechanism (variant) . . . . . 337
Controlling attachments using multi-lever operation . . . . . 339
Controlling attachments using multi-lever operation and the 5th and 6th function . . . . . 341
Controlling attachments using a double mini-lever . . . . . 343
Controlling attachments using the double mini-lever and the 5th function . . . . . 345
Controlling attachments using a triple mini-lever . . . . . 347
Controlling attachments using the triple mini-lever and the 5th function . . . . . 349
Controlling attachments using a quadruple mini-lever . . . . . 351
Controlling attachments using the quadruple mini-lever and the 5th function . . . . . 353
Controlling attachments using the Fingertip . . . . . 354
Controlling attachments using the Fingertip and the 5th function . . . . . 356
Controlling attachments using the Joystick 4Plus . . . . . 358
Controlling attachments using the Joystick 4Plus and the 5th function . . . . . 360
Picking up a load using attachments . . . . . 361

**Auxiliary equipment** . . . . . 362
FleetManager (variant) . . . . . 362
Shock recognition (variant) . . . . . 362
Driver restraint systems (variants) . . . . . 362
Actuating the windscreen wipers and windscreen washers (variant) . . . . . 362
Filling the washer system . . . . . 364
Operating the rear window heating . . . . . 365
Ceiling sensor (variant) . . . . . 365
Fire extinguisher (variant) . . . . . 370
Run-on time for additional devices . . . . . 370
SVI STILL Vehicle Interface (variant) . . . . . 372

**Optical assistance systems** . . . . . 382
Circumferential view camera system (variant). . . . . 382
Modular camera system (variant) . . . . . 387
Laser-Smartfork assistance system (variant) . . . . . 392

**Cab** . . . . . 398
Opening and closing the cab door. . . . . 398
Opening and closing the 180° cab door (variant) . . . . . 398
Opening and closing the side window . . . . . 403
Turning the interior lighting on or off (variant) . . . . . 404
Radio (variant) . . . . . 404
Heating system (variant) . . . . . 405
Air conditioning (variant) . . . . . 405
Clipboard (variant) . . . . . 409
Push-up roof window (variant). . . . . 409
Sun visor and sun blind . . . . . 411

**Trailer operation**. . . . . 412
Towed load . . . . . 412
Coupling pin in the counterweight . . . . . 413
Automatic tow coupling . . . . . 415
Towing trailers . . . . . 420

**Cold store application** . . . . . 421

**Display messages** . . . . . 425
Messages . . . . . 425
Messages about operation . . . . . 425
Messages about the truck . . . . . 434

**Procedure in emergencies**. . . . . 436
Emergency shutdown . . . . . 436
Procedure if truck tips over . . . . . 437
Emergency hammer . . . . . 438
Emergency driving via the drive direction switch/drive direction selection lever . . . . . 438
Emergency lowering . . . . . 439
Emergency actuation of the electric parking brake . . . . . 442
Towing . . . . . 444

**Charging quick access**. . . . . 447
Charging quick access in the counterweight (variant). . . . . 447

**Connecting and disconnecting the battery male connector** . . . . . 455
Connecting the battery male connector. . . . . 455
Disconnect the battery male connector . . . . . 456

**On-board charger** . . . . . 457
General information about the on-board charger (variant) . . . . . 457
Changing the battery type used. . . . . 458
Configuring the on-board charger . . . . . 459
Charging the battery . . . . . 463
Compatible batteries . . . . . 473
Performance data . . . . . 474

**Handling the lead-acid battery** . . . . . 475
Safety regulations for handling the battery . . . . . 475
Maintaining the battery . . . . . 479
Checking the battery condition, acid level and acid density . . . . . 480
Checking the battery charging state and calibrating the battery charge indicator . . . . . 481
Charging the lead-acid battery . . . . . 484
Equalising charging to preserve the battery capacity . . . . . 489
Battery maintenance indicator for lead-acid batteries (variant) . . . . . 490

**Handling the gel battery** . . . . . 491

**Handling the lithium-ion battery** . . . . . 496
Safety regulations for handling the lithium-ion battery. . . . . 496
Lithium-ion batteries "GGS Li-ion 80 V" 24.1 kWh and 60 kWh . . . . . 499
Regulations for storing lithium-ion batteries . . . . . 500
Checking the battery charge state. . . . . 502
Charging the lithium-ion battery. . . . . 504

**Replacing and transporting the battery** . . . . . 509
General information on replacing the battery . . . . . 509
Wire cross-section of the battery cable on the "High Performance" variant . . . . . 509
Changing to a different battery type . . . . . 510
Converting to lithium-ion batteries. . . . . 511
Opening and closing the battery door . . . . . 511
Special notes for installing the lithium-ion battery . . . . . 514
Replacing the battery using a truck . . . . . 514
Replacing the battery using a change frame (variant). . . . . 519
Replacing the battery using an electric battery carrier (variant) . . . . . 525
Transporting the lead-acid battery by crane . . . . . 530
Transporting the lithium-ion battery by crane . . . . . 531

**Li-Ion ready** . . . . . 533
Description. . . . . 533

**Cleaning the truck** . . . . . 535
Cleaning the truck . . . . . 535
Cleaning the electrical system. . . . . 537
Cleaning load chains . . . . . 538

Cleaning the windows . . . 539
After cleaning. . . . 539

**Transporting the truck** . . . 540
Transport . . . 540
Crane loading . . . 543

**Decommissioning** . . . 544
Decommissioning and storing the truck. . . . 544
Use after storage or decommissioning . . . 546

## 5 Maintenance

**Safety regulations for maintenance** . . . 548
General information . . . 548
Working on the hydraulic equipment . . . 548
Working on the electrical equipment . . . 548
Safety devices . . . 549
Set values . . . 549
Lifting and jacking up. . . . 549
Working at the front of the truck . . . 550

**General maintenance information** . . . 551
Personnel qualifications. . . . 551
Information for carrying out maintenance . . . 551
Setting up and adjusting the due date counter for maintenance and safety checks . . . . 553
Maintenance - 1000 hours/yearly . . . 556
Maintenance - 3000 hours/every two years. . . . 560
Ordering spare parts and wearing parts . . . 560
Quality and quantity of the required operating materials . . . 560
Lubrication plan . . . 562
Maintenance data table . . . 563

**Preserving operational readiness** . . . 567
Lubricating the joints and controls . . . 567
Checking the battery interlock and the battery door interlock . . . 567
Maintaining the seat belt . . . 568
Checking the driver's seat . . . 570
Servicing the heating system or air conditioning . . . 570
Servicing wheels and tyres . . . 573
Servicing the steering axle . . . 575
Checking the battery . . . 576
Adjusting the warning zone light . . . 576
Replacing the fuses . . . 577
Checking the hydraulic system for leak tightness . . . 577
Check the hydraulic oil level . . . 580

Lubricating the lift mast and roller track . . . . . 582
Preserving operational readiness for cold store application . . . . . 582

**1000-hour maintenance/annual maintenance** . . . . . 583
Other work that must be carried out . . . . . 583
Checking the lift cylinders and connections for leaks . . . . . 583
Checking the fork arms . . . . . 584
Checking the reversible fork arms . . . . . 584
Checking the double pedal . . . . . 585
Checking the battery changeover frame . . . . . 585

## 6 Technical data

**Ergonomic dimensions** . . . . . 588

**Dimensions** . . . . . 589

**VDI datasheet RX60-25, RX60-25/600 and RX60-25L/600** . . . . . 591

**VDI datasheet RX60-30, RX60-30/600 and RX60-30L/600** . . . . . 596

**VDI datasheet RX60-35L** . . . . . 602

**Eco-design requirements for electric motors and variable speed drives** . . . . . 606

**Information about the lead-acid battery** . . . . . 607

**Battery specifications for X-Line lithium-ion batteries** . . . . . 609

**Information on the auxiliary hydraulics** . . . . . 609

# 1

# Foreword

# Your truck

## Description of the truck

### General

The STILL RX60 25-35 is an electrically driven counterbalanced truck with a rear swing axle and has a load capacity of up to 3.5 tonnes. Alternatively, a load capacity of up to 3.0 tonnes with a load centre of gravity of 600 mm is available. In this case, the truck can reach driving speeds of up to 21 km/h.

It is suitable for indoor use and for outdoor use.

The driver's compartment has an ergonomic design with the steering column and driver's seat offset to one side.

The "STILL Easy Control" display-operating unit manages all functions that are not called up by the operating devices for drive functions and hydraulic functions. The driving condition information and all messages are issued via a large colour display. The display-operating unit uses the current battery charge state and the selected drive programme to calculate the remaining available time until the battery has to be recharged, and displays this time. It also supports all FleetManager 4.x functions.

### Assistance systems

The STILL RX60 25-35 can be equipped with assistance systems that make it easier to work with loads.

Lift height-dependent assistance systems

- Lift height display
- easy Target
- Intermediate lift cut-out
- Lift transition damping
- Lift mast end-stop damping
- End lift cut-out
- Speed reduction when the fork carriage is raised
- Electrical fork wear protection

Tilt angle-dependent assistance systems

- Mast tilt angle display
- Automatic mast vertical positioning

Load-dependant assistance systems

- Overload detection
- Dynamic Load Control 1 or Dynamic Load Control 2
- Lift mast tilt angle display
- Automatic mast vertical positioning
- Fork wear protection
- Load measurement, precise load measurement, total load and tare function

## Brake system

The brake system of the truck comprises three different brakes:

- Service brake
- Regenerative brake
- Electric parking brake

The service brake is based on a wear-free, oil-immersed multi-disc brake. This multi-disc brake is used as the service brake for heavy braking or emergency braking with the brake pedal. In the normal working mode, the regenerative brake of the electric traction motors takes effect. The regenerative brake converts the acceleration energy of the truck into electrical energy. This causes the truck to decelerate as soon as the accelerator pedal is released. If the foot is completely removed from the accelerator pedal, the truck brakes until it comes to a standstill. A parking brake ensures that the truck remains securely in place when parked.

## Hydraulic system

The steering system, the lift cylinders and the tilt cylinders in the lift mast are supplied with power via a hydraulic pump operated by an electric motor.

The proportional valve technology provides particularly sensitive movements and safe handling of the load. The hydraulic functions can be parameterised individually by the authorised service centre.

Up to three hydraulic circuits can be used to activate attachments (variant). Depending on the equipment, a hydraulic accumulator is also available in the lifting circuit for the purpose

of damping pressure peaks in the hydraulic system.

## Drive

Both front wheels of the STILL RX60 25-35 are driven by maintenance-free three-phase drives in the front axle with 80-volt technology.

Lead-acid batteries and X-Line lithium-ion batteries that can be replaced from the side are available as a power supply source. In both cases, the trucks can be supplied as a cold store variant.

With the Li-Ion ready variant, the truck can be prepared ex works for the later use of a lithium-ion battery.

The driver can help to influence the energy consumption and performance of the truck using the "Blue-Q" efficiency mode. The required setting for the current application can be selected via the display-operating unit.

The STILL RX60 25-35 can feature an on-board charger as a variant to enable charging at any CEE-16-A socket.

The "High Performance" variant performs at a higher level and has a modified drive axle and stronger pump motor.

## Steering

The kickback-free, hydraulic rear-wheel steering with "Curve Speed Control" (CSC) ensures driving stability when cornering, allowing the truck to achieve a small turning circle and negotiate narrow aisle widths.

## Operation

The multi-lever, the Fingertip mini-lever and the Joystick 4Plus are available as operating devices for the hydraulic functions. These operating devices enable precise operation and smooth control of the lifting speed thanks to directly controlled valves and proportional valve technology.

The acceleration behaviour and braking behaviour can be selected individually using different driving programmes.

For drive mode, the truck features either single-pedal or dual-pedal operation. The truck is accelerated and braked (regenerative brake) via the accelerator pedal or dual-pedal operation: One pedal is for the "forwards" drive direction and one pedal is for the "backwards" drive direction

Acceleration and braking behaviour can be individually selected from three different driving programmes.

The "STILL Easy Control" display-operating unit simplifies daily use of the truck by providing personally configurable favourites. The display-operating unit also shows the status of the lithium-ion battery.

## General

The truck described in these operating instructions corresponds to the applicable standards and safety regulations.

If the truck is to be operated on public roads, it must conform to the existing national regulations for the country in which it is being used. The driving permit must be obtained from the appropriate office.

The truck has been fitted with state-of-the-art technology. Following these operating instructions will allow the truck to be handled safely. By complying with the specifications in these operating instructions, the functionality and the approved features of the truck will be retained.

Get to know the technology, understand it and use it safely - these operating instructions provide the necessary information and help to avoid accidents and to keep the truck ready for operation beyond the warranty period.

Therefore:

– Before commissioning the truck, read the operating instructions and follow the instructions.

– Always follow all of the safety information contained in the operating instructions and on the truck.

## Conformity marking

The manufacturer uses the conformity marking to document the conformity of the industrial truck with the relevant directives at the time of placing on the market:

- CE: in the European Union (EU)
- UKCA: in the United Kingdom (UK)
- EAC: in the Eurasian Economic Union

The conformity marking is applied to the nameplate. A declaration of conformity is issued for the EU and UK markets.

An unauthorised structural change or addition to the industrial truck can compromise safety, thus invalidating the declaration of conformity.

▷

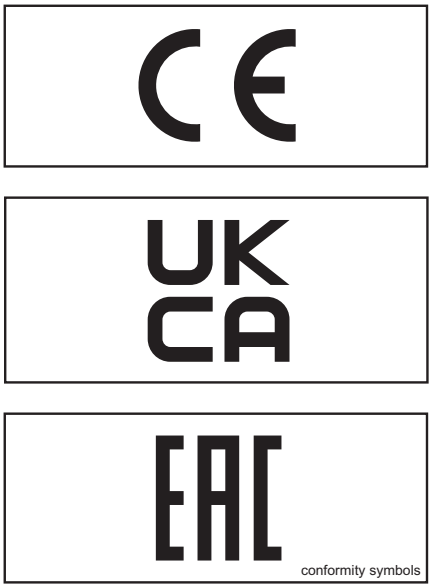

conformity symbols

# Declaration that reflects the content of the declaration of conformity

**Declaration**

STILL GmbH
Berzeliusstraße 10
22113 Hamburg Germany

We declare that the specified machine conforms to the most recent valid version of the directives specified below:

| | |
|---|---|
| Industrial truck type | **corresponding to these operating instructions** |
| Model | **corresponding to these operating instructions** |

– "Machinery Directive 2006/42/EC" [1)]
– "Supply of Machinery Safety Regulations 2008, 2008 No. 1597" [2)]

Personnel authorised to compile the technical documents:

See declaration of conformity

STILL GmbH

[1)] For the markets of the European Union, the EU candidate countries, the EFTA States and Switzerland.
[2)] For the United Kingdom market.

The declaration of conformity document is supplied with the industrial truck. The declaration shown explains the conformity with the provisions of the EC Machinery Directive and the Supply of Machinery Safety Regulation 2008, 2008 No. 1597.

An unauthorised structural change or addition to the industrial truck can compromise safety, thus invalidating the declaration of conformity.

The declaration of conformity must be carefully stored and made available to the responsible authorities if necessary. It must also be handed over to the new owner if the industrial truck is sold on.

## Accessories

- Two keys for the key switch (not for trucks with the "Switch on via push button" variant)
- Two keys for the cab (variant)
- Two keys for the storage box containing the charging cable for the on-board charger (variant)
- A hexagon socket wrench for emergency lowering (in the compartment)
- A battery change frame
- A battery change frame (not for trucks with the "electric battery carrier" variant)

# Labelling points

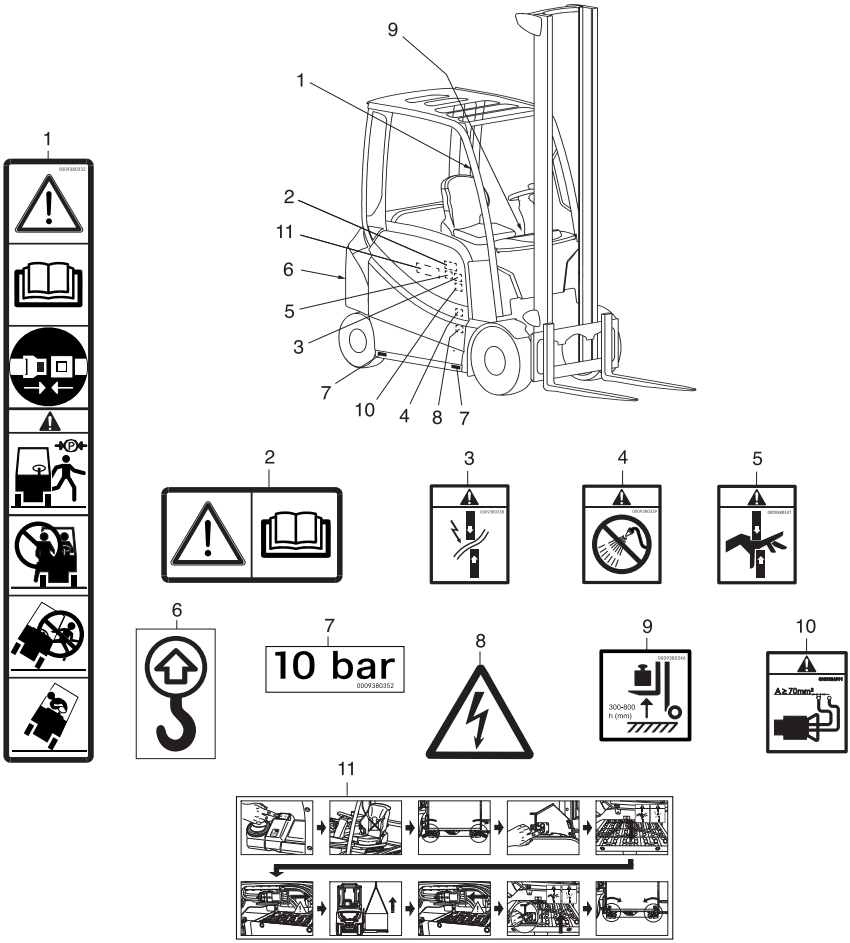

1 Decal information: Caution / Read the operating instructions / Fasten seat belt / Apply parking brake when leaving the truck / Passengers are not allowed / Do not jump off if the truck is tipping over / Lean in the opposite direction to which the truck is tilting
2 Decal information: Caution / Read the operating instructions
3 Warning sign: Risk of short circuit due to shearing
4 Warning sign: Electrical system parts must not be cleaned with water
5 Warning sign: Danger due to shearing
6 Decal information: Lifting gear fixing point
7 Decal information: Tyre filling pressure
8 Warning sign: Dangerous electrical voltage
9 Decal information: Load measurement
10 Warning sign: Cable cross-section
11 Decal information: Battery carrier

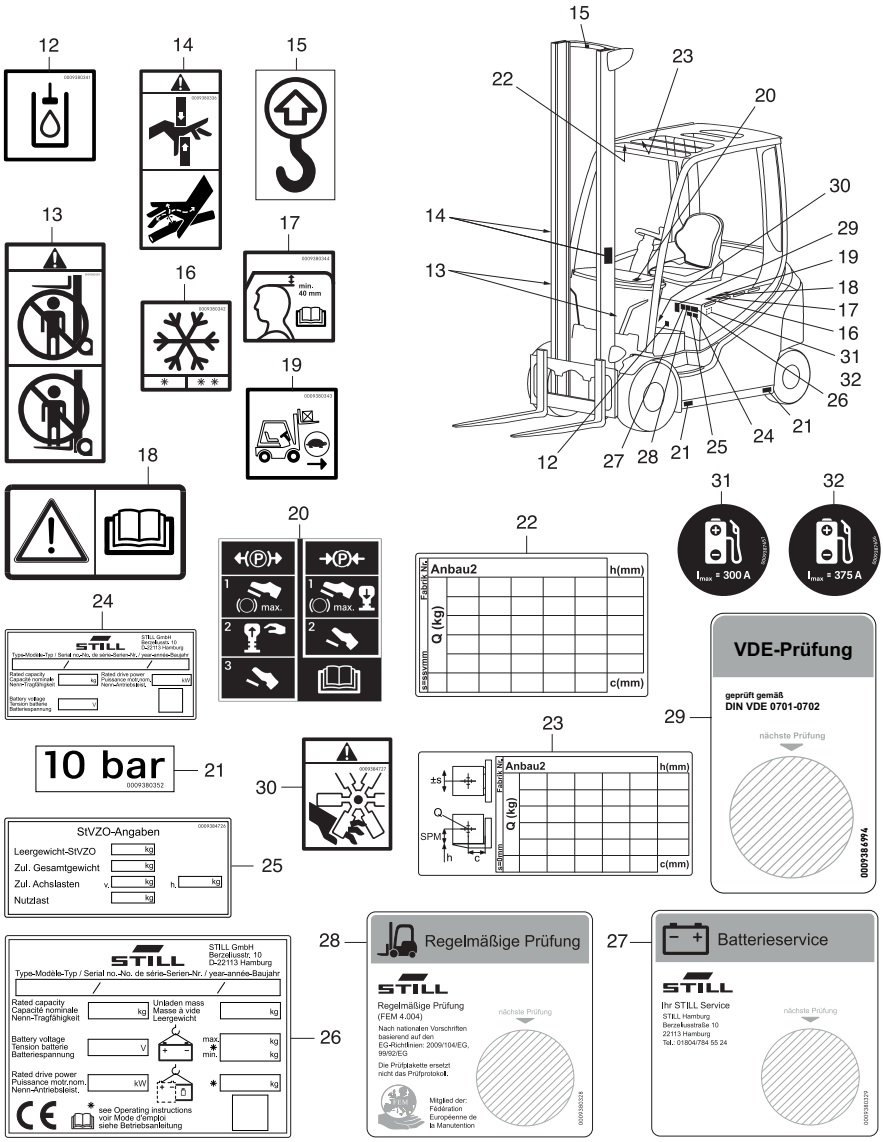
12
14
15
13
16
17
min. 40 mm
19
18
20
24
STILL
STILL GmbH
Berzelliusstr. 10
D-22113 Hamburg
Type-Modèle-Typ / Serial no.-No. de série-Serien-Nr. / year-année-Baujahr
Rated capacity
Capacité nominale
Nenn-Tragfähigkeit
kg
Rated drive power
Puissance mot.nom.
Nenn-Antriebsleist.
kW
Battery voltage
Tension batterie
Batteriespannung
V
10 bar
0009380352
21
30
25
StVZO-Angaben
Leergewicht-StVZO
Zul. Gesamtgewicht
Zul. Achslasten
v.
h.
Nutzlast
kg
26
Unladen mass
Masse à vide
Leergewicht
max.
min.
see Operating instructions
voir Mode d'emploi
siehe Betriebsanleitung
22
Anbau2
Fabrik.Nr.
h(mm)
Q (kg)
s=s=y=mm
c(mm)
23
±s
Q
SPM
h
c
29
VDE-Prüfung
geprüft gemäß
DIN VDE 0701-0702
nächste Prüfung
0009386400
31
32
$I_{max}$ = 300 A
$I_{max}$ = 375 A
28
Regelmäßige Prüfung
Regelmäßige Prüfung
(FEM 4.004)
Nach nationalen Vorschriften basierend auf den EG-Richtlinien: 2009/104/EG, 99/92/EG
Die Prüfplakette ersetzt nicht das Prüfprotokoll.
Mitglied der: Fédération Européenne de la Manutention
27
Batterieservice
Ihr STILL Service
STILL Hamburg
Berzeliusstraße 10
22113 Hamburg
Tel.: 018047845524

12 Decal information: Hydraulic oil tank
13 Warning sign: Do not stand underneath the fork/Do not stand on the fork
14 Warning sign: Danger due to shearing/Danger due to high fluid pressure
15 Decal information: Lifting gear fixing point
16 Decal information: Cold store application (variant)
17 Decal information: Observe head clearance
18 Decal information: Caution / Read the operating instructions
19 Decal information: Speed reduction
20 Decal information: Emergency operation of the parking brake
21 Decal information: Tyre filling pressure
22 Decal information: Load capacity: Attachment
23 Decal information: Load capacity: Basic table
24 Nameplate without CE labelling
25 Decal information: StVZO (German Road Traffic Licensing Regulations) information
26 Nameplate with CE labelling
27 Decal information: Battery service
28 Decal information: Regular testing
29 Decal information: VDE test
30 Warning sign: Ventilator
31 Decal information: Charging current limitation

# Nameplate

## Variant 1: Industrial trucks built up to 12/2021

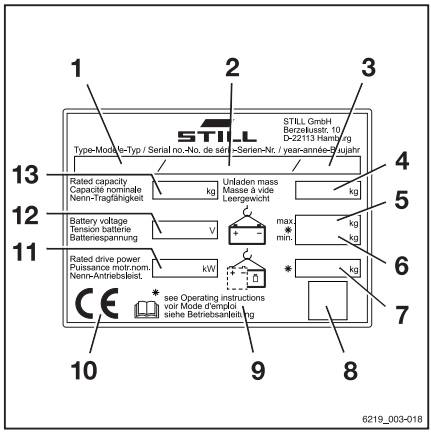


1 Model
2 Serial number
3 Year of manufacture
4 Tare weight in kilograms
5 Maximum permitted battery weight in kilograms (only for electric trucks)
6 Minimum permitted battery weight in kilograms (only for electric trucks)
7 Ballast weight in kilograms (only for electric trucks)
8 Data matrix code
9 For more detailed information, refer to the technical data in the operating instructions
10 CE labelling
11 Nominal drive power in kilowatts
12 Battery voltage V
13 Rated capacity in kilograms

## Variant 2: Industrial trucks built after 12/2021

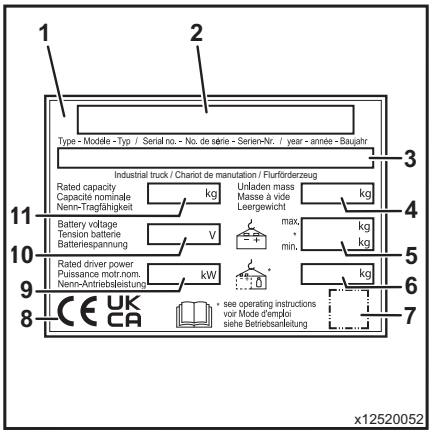


1 Nameplate
2 Manufacturer
3 Model / serial number / year of manufacture
4 Tare weight
5 Max. battery weight/min. battery weight (only for electric trucks)
6 Ballast weight (only for electric trucks)
7 Placeholder for "data matrix code"
8 Conformity marking: CE mark for the markets of the EU, the EU candidate countries, the EFTA States and Switzerland; UKCA mark for the United Kingdom market; EAC mark for the Eurasian Economic Union market
9 Rated drive power
10 Battery voltage (only for electric trucks)
11 Rated capacity

**NOTE**

- *It is possible for there to be multiple conformity markings on the nameplate.*
- *The EAC mark may also be located in the immediate vicinity of the nameplate.*

## Serial number

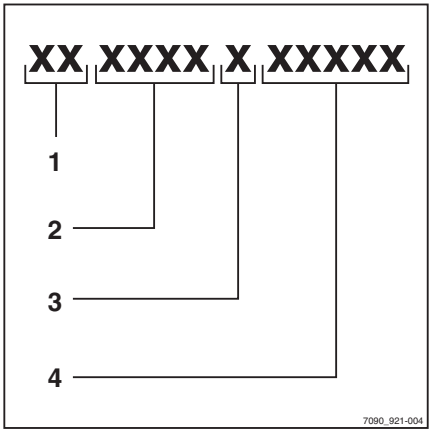


The serial number is used to identify the truck. The serial number is shown on the nameplate. Quote the serial number for all technical questions.

The serial number contains the following coded information:

1 Production location
2 Model
3 Year of manufacture
4 Sequential number

## StVZO (Road Traffic Licensing Regulations) information

This label includes information on the weight and load distribution of the truck in kg.

1 Tare weight
2 Total permissible weight
3 Permitted front axle load
4 Permitted rear axle load
5 Payload

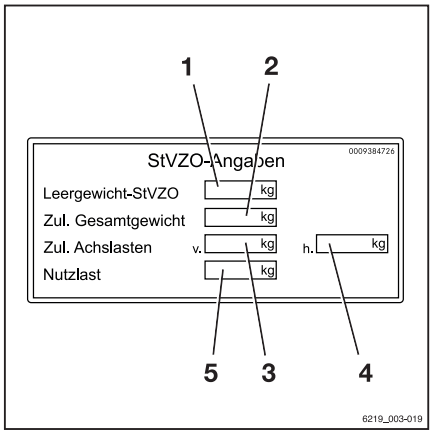


## Nameplate of a lithium-ion battery

### Variant 1: Industrial trucks built up to 12/2021

1 Manufacturer
2 Technology
3 Transportation notes
4 General operating notes
5 Data matrix code for the authorised service centre
6 CE labelling
7 Safety information
8 Data/technical data
9 Address of manufacturer

## Variant 1: Industrial trucks built after 12/2021 ▷

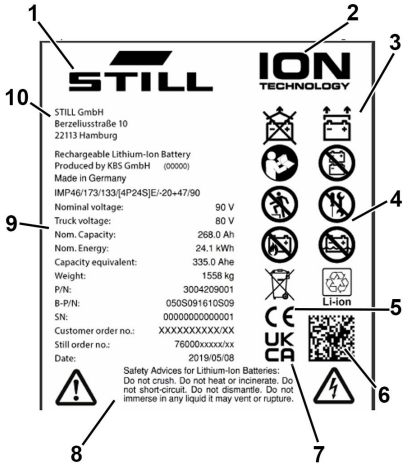


1 Manufacturer
2 Technology
3 Transportation notes
4 General operating notes
5 CE labelling
6 Data matrix code for the authorised service centre
7 UKCA labelling
8 Safety information
9 Data/technical data
10 Address of manufacturer

# Using the truck

## Commissioning

Commissioning is the initial intended use of the truck.

The necessary steps for the commissioning vary depending on the model and equipment of the truck. These steps require preparatory work and adjustment work that cannot be performed by the operating company. See also the chapter entitled "Definition of responsible persons".

– To commission the truck, contact the authorised service centre.

## Intended use

The truck described in these operating instructions is suitable for lifting, transporting and stacking loads.

The truck may only deployed for its intended use as set out and described in these operating instructions.

If the truck is to be used for purposes other than those specified in the operating instructions, the approval of the manufacturer and, if applicable, the relevant regulatory authorities must be obtained beforehand in order to prevent hazards.

The maximum load to be lifted is specified on the capacity rating plate (load diagram) and must not be exceeded; see the section entitled "Capacity rating plate" in the chapter entitled "Handling loads".

## Proper use during towing

This truck is suitable for the occasional towing of trailers and is equipped with a towing device for this purpose. This occasional towing may not exceed 2% of the daily operating time. If the truck is to be used for towing on a more regular basis, the manufacturer should be consulted.

The regulations regarding trailer operation must be observed; see chapter "Trailer operation".

## Improper use

The operating company or driver, and not the manufacturer, is liable for any hazards caused by improper use.

NOTE

*Please note the definition of the following responsible persons: "operating company" and "driver".*

Use for purposes other than those described in these operating instructions is prohibited.

**DANGER**

**There is a risk of fatal injury from falling off the truck while it is moving!**

– It is prohibited to carry passengers on the truck.

The truck may not be operated in areas where there is a risk of explosion, in areas that cause corrosion or in areas that are particularly dusty.

Stacking or unstacking on inclined surfaces or ramps is not permitted.

## Place of use

The truck can be used both outside and in buildings. Operation on public roads is only permitted if the "StVZO" (German Road Traffic Licensing Regulations) equipment variant is installed.

If the truck is to be operated on public roads, the truck must conform to the national regulations for the country in which it is being used.

The ground must have an adequate load capacity (concrete, asphalt) and a rough surface. Roadways, working areas and aisle widths must conform to the specifications in these operating instructions; see the chapter entitled "Roadways".

Driving on upward and downward gradients is permitted provided the specified data and specifications are observed, see the "Routes "chapter.

The truck is suitable for indoor and outdoor use in countries ranging from the Tropics to Nordic regions (temperature range: -20°C to +40°C).

If the truck is to be used in a cold store, it must be configured accordingly and, if necessary, approved for such an environment; see the chapter entitled "Cold store application".

**⚠ CAUTION**

Batteries can freeze!

If the truck is parked in an ambient temperature of below -10°C for an extended period, the batteries will cool down. The electrolyte may freeze and damage the batteries. The truck is then not ready for operation.

– At ambient temperatures of below -10°C, only park the truck for short periods of time.

The operating company must ensure suitable fire protection for the relevant application in the truck's surroundings. Depending on the application, additional fire protection must be provided on the truck. If in doubt, contact the relevant authorities.

**NOTE**

*Please observe the definition of the following responsible person: "operating company".*

## Parking in temperatures below -10 °C

**⚠ CAUTION**

Batteries may freeze or switch off!

If the truck is parked in an ambient temperature of below -10°C for an extended period, the batteries will cool down.

For lead-acid batteries, the electrolyte can freeze and damage the batteries.

Some types of lithium-ion batteries switch off at a certain temperature. These batteries cannot be switched on again until the operating temperature is reached.

The truck is then not ready for operation.

- At ambient temperatures of below -10°C, only park the truck for short periods of time.
- Pay attention to the equipped battery and the corresponding operating instructions.

## Using working platforms

**⚠ WARNING**

The use of working platforms is regulated by national law. The use of working platforms is only permitted by virtue of the jurisdiction in the country of use.

- Observe national legislation.
- Before using working platforms, consult the national regulatory authorities.

# Information about the documentation

## Scope of the documentation

- Original operating instructions of the truck
- Original operating instructions of the display-operating unit
- Original operating instructions of the lithium-ion battery (variant)
- Operating instructions of other variants that are not mentioned in these original operating instructions
- "CO"Operating instructions or inserts (depending on the truck equipment)

These operating instructions describe all measures necessary for the safe operation and proper maintenance of the truck in all possible variants available at the time of printing. Special versions to meet customer requirements (CO) are documented in separate operating instructions. If you have any questions, contact your authorised service centre.

Enter the serial number and year of manufacture from the nameplate in the space provided:

| | |
|---|---|
| **Serial number** | |
| **Year of manufacture** | |

Please quote the serial number in all technical enquiries.

Each truck comes with a set of operating instructions. These instructions must be stored carefully and must be available to the driver and operating company at all times. The storage location is specified in the section entitled "Overview of the driver's compartment".

If a copy of the operating instructions is lost, the operating company must obtain a replacement from the manufacturer immediately.

The operating instructions are included in the spare parts list and can be reordered as a spare part.

The personnel responsible for operating and maintaining the equipment must be familiar with these operating instructions.

The operating company must ensure that all users have received, read and understood these operating instructions.

Safely store the complete documentation and pass on to the subsequent operating company when transferring or selling the truck.

NOTE

*Please note the definition of the following responsible persons: "operating company" and "driver".*

Thank you for reading and complying with these operating instructions. If you have any questions or suggestions for improvements, or if you have found any errors, please contact the authorised service centre.

## Supplementary documentation

This industrial truck can be fitted with a **C**ustomer **O**ption (**CO**) that deviates from the standard equipment and the variants.

This CO may consist of:

- Special sensors
- A special attachment
- A special towing device
- Customised attachments

When fitted with a CO, the industrial truck is provided with additional documentation. This may take the form of an insert or separate operating instructions.

The original operating instructions for this industrial truck are valid for the operation of standard equipment and variants without restriction. The operational and safety information in the original operating instructions continues to be valid in its entirety unless it is countermanded in this additional documentation.

The requirements for the qualification of personnel as well as the time for maintenance may vary. This is defined in the additional documentation.

– If you have any questions, contact your authorised service centre.

## Issue date and topicality of the operating instructions

The issue date and the version of these operating instructions can be found on the title page.

STILL is constantly engaged in the further development of trucks. These operating instructions are subject to change, and any claims based on the information and/or illustrations contained in them cannot be asserted.

Please contact your authorised service centre for technical support relating to your truck.

## Copyright and trademark rights

These instructions, including excerpts thereof, must not be reproduced, translated or made accessible to third parties, except with the express written approval of the manufacturer.

## Explanation of signal terms used

**DANGER**

**Indicates procedures that must be strictly adhered to in order to prevent the risk of fatalities.**

**WARNING**

Indicates procedures that must be strictly adhered to in order to prevent the risk of injuries.

**CAUTION**

Indicates procedures that must be strictly adhered to in order to prevent material damage and/or destruction.

**NOTE**

*For technical requirements that require special attention.*

**ENVIRONMENT NOTE**

*To prevent environmental damage.*

## List of abbreviations

This list of abbreviations applies to all types of operating instructions. Not all of the abbreviations that are listed here will necessarily appear in these operating instructions.

| Abbreviation | Meaning | Explanation |
|---|---|---|
| ArbSchG | Arbeitsschutzgesetz | German implementation of EU occupational health and safety directives |
| BetrSichV | Betriebssicherheitsverordnung | German implementation of the EU working equipment directive |
| BG | Berufsgenossenschaft | German insurance company for the company and employees |
| BGG | Berufsgenossenschaftlicher Grundsatz | German principles and test specifications for occupational health and safety |
| BGR | Berufsgenossenschaftliche Regel | German rules and recommendations for occupational health and safety |
| DGUV | Berufsgenossenschaftliche Vorschrift | German accident prevention regulations |

| Abbreviation | Meaning | Explanation |
|---|---|---|
| CE | Communauté Européenne | Confirms conformity with product-specific European directives (CE labelling) |
| CEE | Commission on the Rules for the Approval of the Electrical Equipment | International commission on the rules for the approval of electrical equipment |
| DC | Direct Current | Direct current |
| DFÜ | Datenfernübertragung | Remote data transfer |
| DIN | Deutsches Institut für Normung | German standardisation organisation |
| EG | European Community | |
| EN | European standard | |
| FEM | Fédération Européene de la Manutention | European Federation of Materials Handling and Storage Equipment |
| $F_{max}$ | maximum Force | Maximum power |
| GAA | Gewerbeaufsichtsamt | German authority for monitoring/issuing regulations for worker protection, environmental protection, and consumer protection |
| GPRS | General Packet Radio Service | Transfer of data packets in wireless networks |
| ID no. | Identification number | |
| ISO | International Organization for Standardization | International standardisation organisation |
| $K_{pA}$ | Uncertainty of measurement of sound pressure levels | |
| LAN | Local Area Network | Local area network |
| LED | Light Emitting Diode | Light emitting diode |
| $L_p$ | Sound pressure level at the workplace | |
| $L_{pAZ}$ | Average continuous sound pressure level in the driver's compartment | |
| LSP | Load centre of gravity | Distance of the centre of gravity of the load from the front face of the fork backs |
| MAK | Maximum workplace concentration | Maximum permissible air concentrations of a substance at the workplace |
| Max. | Maximum | Highest value of an amount |
| Min. | Minimum | Lowest value of an amount |
| PIN | Personal Identification Number | Personal identification number |
| PPE | Personal protective equipment | |
| SE | Super-Elastic | Superelastic tyres (solid rubber tyres) |

| Abbreviation | Meaning | Explanation |
|---|---|---|
| SIT | Snap-In Tyre | Tyres for simplified assembly, without loose rim parts |
| StVZO | Straßenverkehrs-Zulassungs-Ordnung | German regulations for approval of vehicles on public roads |
| TRGS | Technische Regel für Gefahrstoffe | Ordinance on hazardous materials applicable in the Federal Republic of Germany |
| UKCA | United Kingdom Conformity Assessed | Confirms conformity with the product-specific directives that apply in the United Kingdom (UKCA labelling) |
| VDE | Verband der Elektrotechnik Elektronik Informationstechnik e. V. | German technical/scientific association |
| VDI | Verein Deutscher Ingenieure | German technical/scientific association |
| VDMA | Verband Deutscher Maschinen- und Anlagenbau e. V. | German Mechanical Engineering Industry Association |
| WLAN | Wireless LAN | Wireless local area network |

## Definition of directions

▷

The directions "forwards" (1), "backwards" (3), "right" (2) and "left" (4) refer to the installation position of the parts as seen from the driver's compartment; the load is to the front.

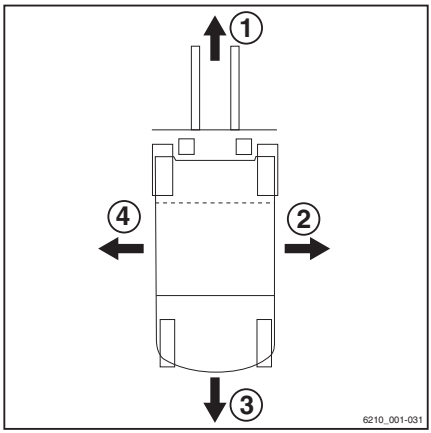

# Schematic views

## View of functions and operating procedures

At many points in this documentation, the (mostly sequential) operation of certain functions or operating procedures is explained. Schematic diagrams of a counterbalance truck are used to illustrate these procedures.

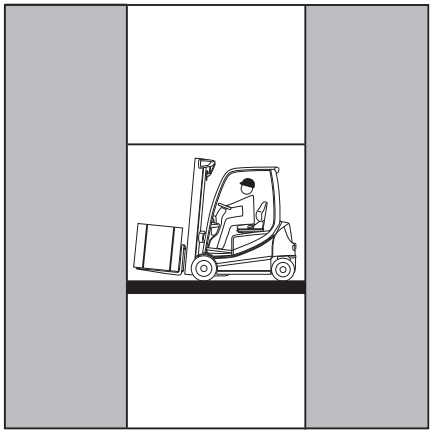

NOTE

*These schematic views are not representative of the structural state of the documented truck. The views are used solely for the purpose of clarifying procedures.*

## View of the display-operating unit

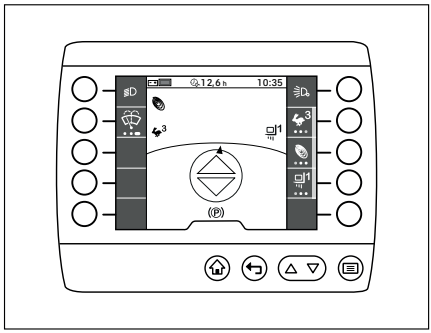


NOTE

*Views of operating statuses and values in the display of the display and operating unit are examples and partly dependent on the truck equipment. As a result, the displays shown of the actual operating statuses and values may vary.*

# Environmental considerations

## Packaging

During delivery of the truck, certain parts are packaged to provide protection during transport. This packaging must be removed completely prior to initial start-up.

ENVIRONMENT NOTE

*The packaging material must be disposed of properly after delivery of the truck.*

## Disposal of components and batteries

The truck is composed of different materials. If components or batteries need to be replaced and disposed of, they must be:

- disposed of,
- treated or
- recycled in accordance with regional and national regulations.

NOTE

*The documentation provided by the battery manufacturer must be observed when disposing of batteries.*

ENVIRONMENT NOTE

*We recommend working with a waste management company for disposal purposes.*

# 2

# Safety

# Definition of responsible persons

## Operating company

The operating company is the natural or legal person or group who operates the truck or on whose authority the truck is used.

The operating company must ensure that the truck is only used for its proper purpose and in compliance with the safety regulations set out in these operating instructions.

The operating company must ensure that all users read and understand the safety information.

The operating company is responsible for the scheduling and correct performance of regular safety checks.

We recommend that the national performance specifications are adhered to.

## Specialist

A qualified person is defined as a service engineer or a person who fulfils the following requirements:

- A completed vocational qualification that demonstrably proves their professional expertise. This proof should consist of a vocational qualification or a similar document.
- Professional experience indicating that the qualified person has gained practical experience of industrial trucks over a proven period during their career During this time, this person has become familiar with a wide range of symptoms that require checks to be carried out, such as based on the results of a hazard assessment or a daily inspection
- Recent professional involvement in the field of the industrial truck test in question and an appropriate further qualification are essential. The qualified person must have experience of carrying out the test in question or of carrying out similar tests. Moreover, this person must be aware of the latest technological developments regarding the industrial truck to be tested and the risk being assessed

## Drivers

This truck may only be driven by suitable persons who are at least 18 years of age, have been trained in driving, have demonstrated their skills in driving and handling loads to the operating company or an authorised representative, and have been specifically instructed to drive the truck. Specific knowledge of the truck to be operated is also required.

The training requirements under §3 of the Health and Safety at Work Act and §9 of the plant safety regulations are deemed to have been satisfied if the driver has been trained in accordance with BGG (General Employers' Liability Insurance Association Act) 925. Observe the national regulations for your country.

### Driver rights, duties and rules of behaviour

The driver must be trained in his rights and duties.

The driver must be granted the required rights.

The driver must wear protective equipment (protection suit, safety footwear, safety helmet, industrial goggles and gloves) that is appropriate for the conditions, the job and the load to be lifted. Solid footwear should be worn to ensure safe driving and braking.

The driver must be familiar with the operating instructions and have access to them at all times.

The driver must:

- have read and understood the operating manual
- have familiarised himself with safe operation of the truck
- be physically and mentally able to drive the truck safely

**⚠ DANGER**

**The use of drugs, alcohol or medications that affect reactions impair the ability to drive the truck!**

Individuals under the influence of the aforementioned substances are not permitted to perform work of any kind on or with the truck.

## Prohibition of use by unauthorised persons

The driver is responsible for the truck during working hours. He must not allow unauthorised persons to operate the truck.

When leaving the truck, the driver must secure it against unauthorised use, e.g. by pulling out the key.

# Basic principles for safe operation

## Insurance cover on company premises

In many cases, company premises are restricted public traffic areas.

NOTE

The business liability insurance should be reviewed to ensure that, in the event of any damage caused in restricted public traffic areas, there is insurance cover for the truck in respect of third parties.

## Special notes for using lithium-ion batteries

The following special features apply for the operating company and drivers when this truck is equipped with a lithium-ion battery (variant) in place of a conventional lead-acid battery.

**DANGER**

**Risk of explosion!**

Heating to over 80°C, mechanical stress and incorrect use may lead to the battery exploding.

- Never heat the battery to over 80°C or expose it to naked flames.
- Do not subject the battery to excessive mechanical loads.
- Do not climb on the battery.
- Avoid impacts.
- Do not open the battery.
- Never short-circuit the battery connectors.
- Do not connect the battery with the polarity reversed.

## Permissible lithium-ion batteries

– Use only lithium-ion batteries that have been approved by STILL for use with this truck.

## Declaring the use of lithium-ion batteries

We recommend that the operating company informs the local fire brigade of the planned use of trucks fitted with lithium-ion batteries.

The health and safety representative and the workforce must also be informed that trucks with lithium-ion batteries are being used.

## Hazard assessment

In accordance with §3 of the German Ordinance on Industrial Safety and Health (BetrSichV), the operating company is obliged to perform a separate hazard assessment in order to assess the risks posed to the company by lithium-ion batteries.

– Observe the national regulations for the country in which the truck is being used.

## Driver qualification

In addition to the prerequisites set out in the chapter entitled "Definition of responsible persons", in the section entitled "Driver", please observe the following:

- The driver must be instructed in how to operate the lithium-ion battery.
- This truck must only be driven by drivers who have received instruction on the operation and the dangers of the lithium-ion batteries.

## Procedure in the event of a fire

Damaged lithium-ion batteries pose an increased fire hazard. In the event of a fire, large quantities of water are the best option to cool the battery.

– Evacuate the location of the fire as quickly as possible.

- Ventilate the location of the fire well, as the resulting combustion gases are corrosive if inhaled.
- Inform the fire brigade that lithium-ion batteries are affected by the fire.
- Observe the information provided by the battery manufacturer regarding the procedure in the event of a fire.

Water can be used to cool down an incipient fire.

## Transport

In certain circumstances, transporting the lithium-ion battery outside the premises may require a special transport container.

- Contact the authorised service centre for more information.

## Product-specific dangers posed by the lithium-ion battery

**WARNING**

Risk of burns due to hot surfaces!

The battery has an integrated brake resistor that can heat up to over 100°C during operation.

It can take several hours for the brake resistor to cool down to a temperature at which it poses no risk.

– Do not touch the hot area (1).

**WARNING**

Risk of injury!

If the safety valve (2) trips, there is a risk of injury!

– Exit the area around the battery immediately, retreating to a minimum distance of 5 m.

**NOTE**

*The brake resistor (1) is installed differently depending on the battery group. The build-up of heat in the area around the brake resistor is harmless. The safety valve (2) opens when the battery is subjected to over pressure or catches fire.*

The nameplate is used to identify the lithium-ion battery that is fitted.

– Observe the instructions for the lithium-ion battery used in your truck in the corresponding operating instructions.

All lithium-ion batteries are essentially associated with the risk of a fire starting, of the battery exploding and of the battery causing chemical burns.

If the batteries are used properly, no hazardous substances escape from the closed tray. No contact with toxic substances is possible. There is a risk of contact only in the event of incorrect use (mechanical, thermal, electrical) that leads to activation of the safety valve (2) or to the housing cracking. As a result, the electrolyte fluid may leak out, the electrode material may react with moisture/water or battery discharge/a fire/or an explosion can

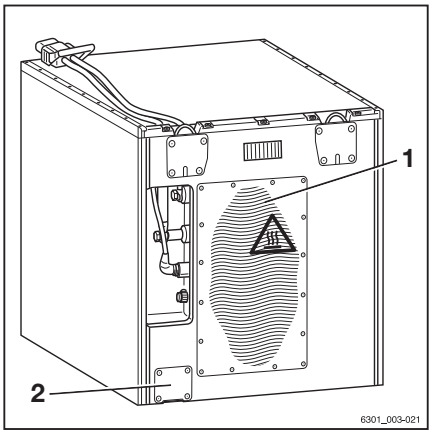


Example image
1 Hot area around the brake resistor
2 Safety valve

occur, depending on the surrounding circumstances.

Touching live components can cause an electric shock, which can have thermal or paralysing effects. The latter can cause ventricular fibrillation, cardiac arrest or respiratory paralysis, leading to death.

If a battery combusts, the resulting smoke or vapours can cause irritation of the eyes, skin and respiratory system.

## Modifying and retrofitting

If the truck will be used for work that is not listed in the directives or in these instructions, convert or retrofit the truck for this purpose as required. Any structural modification can impair the handling and stability of the truck, and can result in accidents.

The following modifications to components and properties are permitted only with the written approval of the manufacturer (examples):

- Any modifications that adversely affect the stability or load capacity of the truck or the circumferential view from the truck
- Braking
- Steering
- Operating devices
- Safety systems
- Equipment variants
- Attachments

If necessary, obtain approval from the relevant authorities. Observe the national regulations for the country in which the truck is being used

We warn against installing and using restraint systems that have not been approved by the manufacturer.

– Contact the authorised service centre before converting or retrofitting restraint systems.

Only the authorised service centre is permitted to perform welding work on the truck.

**⚠ DANGER**

**Risk of explosion from additional bores in the battery hood!**

Explosive gases can escape and can lead to potentially fatal injuries if they explode. Sealing bores with plugs is not sufficient to prevent gas from escaping.

– Do not drill any holes in the battery hood.

**⚠ DANGER**

**Risk of accident from additional bores in the battery hood!**

The rigidity of the battery hood is impaired and the battery hood can break. The driver's seat may collapse into the battery hood, which could cause the driver to perform uncontrolled steering and driving manoeuvres.

– Do not drill any holes in the battery hood.

**⚠ DANGER**

**Risk of fatal injury from falling load!**

There is a risk to the driver's life if the truck is not equipped with an overhead guard, as the driver may be struck by a load falling from a lift height of 1800 mm or greater.

Operation of the truck without an overhead guard is prohibited at a lift height greater than 1800 mm.

– At lift heights of 1800 mm and above, only use the truck in conjunction with an overhead guard.

The operating company is only permitted to make modifications to the truck independently if the manufacturer goes into liquidation and the company is not taken over by another legal person.

The operating company must also fulfil the following prerequisites:

- Design documents, test documents and assembly instructions associated with the modification must be permanently archived and remain accessible at all times.
- The capacity rating plate, the decal information, the hazard warnings and the operating instructions must be checked to ensure that they are consistent with the modifications and must be amended if required.
- Modifications must be designed, checked and implemented by a design office that specialises in industrial trucks. The design

office must comply with the standards and directives valid at the time that modifications are made.

Decal information with the following data must be permanently affixed to the truck so that it is clearly visible:

- Type of modification
- Date of modification
- Name and address of the company that carried out the modification

## Changes to the overhead guard and roof loads

**⚠ DANGER**

**In the event of the overhead guard failing due to a falling load or the truck tipping over, there are potentially fatal consequences for the driver. There is a risk to life!**

Welding and drilling on the overhead guard changes the material characteristics and the structural design of the overhead guard. Excessive forces caused by falling loads or the truck tipping over may result in buckling of the modified overhead guard and no protection for the driver.

– Do not perform welding on the overhead guard.

– Do not perform drilling on the overhead guard.

**⚠ CAUTION**

Heavy roof loads damage the overhead guard!

To ensure the stability of the overhead guard at all times, a roof load may only be mounted on the overhead guard if the structural design has been tested and the manufacturer has given approval.

– Seek advice from the authorised service centre for the mounting of roof loads.

## Warning regarding non-original parts

Original parts, attachments and accessories are specially designed for this truck. We specifically draw your attention to the fact that parts, attachments and accessories supplied by other companies have not been tested and approved by STILL.

**⚠ CAUTION**

Installation and/or use of such products may therefore have a negative impact on the design features of the truck and thus impair active and/or passive driving safety.

We recommend that you obtain approval from the manufacturer and, if necessary, from the relevant regulatory authorities before installing such parts. The manufacturer accepts no liability for any damage caused by the use of non-original parts and accessories without approval.

## Damage, defects and misuse of safety systems

Damage or other defects on the truck or attachment must be reported to the supervisor or responsible fleet manager immediately so that they can have the defect rectified.

Trucks and attachments that are not functional or safe to drive may not be used until they have been properly repaired.

Do not remove or deactivate safety systems and switches.

Fixed set values may only be changed with the approval of the manufacturer.

Work on the electrical system (e.g. connecting a radio, additional headlights etc.) is only permitted with the manufacturer's written approval. All electrical system interventions must be documented.

Even if they are removable, roof panels may not be removed, as they are designed to protect against small falling objects.

## Tyres

**⚠ DANGER**

**Risk to stability!**

Failure to observe the following information and instructions can lead to a loss of stability. The truck may tip over, risk of accident!

The following factors can lead to a loss of stability and are therefore **prohibited**:

- Different tyres on the same axle, e.g. pneumatic tyres and superelastic tyres
- Tyres not approved by the manufacturer
- Excessive tyre wear
- Tyres of inferior quality
- Changing rim wheel parts
- Combining rim wheel parts from different manufacturers

The following rules must be observed to ensure stability:

- Only use tyres with equal and permitted levels of wear on the same axle
- Only use wheels and tyres of the same type on the same axle, e.g. only superelastic tyres
- Only use wheels and tyres approved by the manufacturer
- Only use high-quality products

Wheels and tyres approved by the manufacturer can be found on the spare parts list.
If other wheels or tyres are to be used, authorisation from the manufacturer must be obtained beforehand.

– Contact the authorised service centre on this matter.

When changing wheels or tyres, always ensure that this does not cause the truck to tilt to one side (e.g. always replace right-hand and left-hand wheels at the same time). Changes must only be made following consultation with the manufacturer.

If the type of tyre used on an axle is changed, for example from superelastic tyres to pneumatic tyres, the load diagram must be changed accordingly.

– Contact the authorised service centre on this matter.

## Medical equipment

**⚠ WARNING**

Electromagnetic interference may occur on medical devices!

Only use equipment that is sufficiently protected against electromagnetic interference.

Medical equipment, such as pacemakers or hearing aids, may not work properly when the truck is in operation.

– Ask your doctor or the manufacturer of the medical equipment to confirm that the medical equipment is sufficiently protected against electromagnetic interference.

## Exercise caution when handling gas springs and accumulators

**⚠ WARNING**

Gas springs are under high pressure. Improper removal results in an elevated risk of injury.

For ease of operation, various functions on the truck can be supported by gas springs. Gas springs are complex components that are subject to high internal pressures (up to 300 bar). They may under no circumstances be opened unless instructed to do so, and may be installed only when not under pressure. If required, the authorised service centre will depressurise the gas spring in accordance with the regulations before removal. Gas springs must be depressurised before recycling.

– Avoid damage, lateral forces, buckling, temperatures over 80°C and heavy contamination.
– Damaged or defective gas springs must be changed immediately.
– Contact the authorised service centre.

**⚠ WARNING**

Accumulators are under high pressure. Improper installation of an accumulator results in an elevated risk of injury.

Before starting work on the accumulator it must be depressurised.

– Contact the authorised service centre.

## Length of the fork arms

**⚠ DANGER**

**Risk of accident due to the incorrect selection of fork arms!**

– The fork arms must match the depth of the load.

If the fork arms are too short, the load may fall off the arms after it has been picked up. In addition, be aware that the load centre of gravity may shift as a result of dynamic forces, such as braking. A load that is otherwise resting safely on the fork arms may move forwards and fall.

If the fork arms are too long, they can catch on loading units behind the load that is to be picked up. These other loading units then fall over when the load is raised.

– For help with selecting the correct fork arms, contact the authorised service centre.

# Residual risk

## Residual dangers, residual risks

Despite working with care and complying with the standards and regulations, the possibility of other dangers arising when using the truck cannot be ruled out.

The truck and all other system components comply with current safety requirements. Even when the industrial truck is used in accordance with its intended use and all instructions provided are followed, some residual risk cannot be excluded.

A residual risk cannot be excluded even beyond the narrow limits of the danger area that the truck itself represents. In order to be able to react immediately in the event of a malfunction, an incident, a breakdown etc., persons in the danger area must pay increased attention to the truck.

**⚠ WARNING**

All persons in the danger area of the truck must be aware of the dangers posed by the truck.

In addition, your attention is drawn to the safety regulations given in these operating instructions.

Risks can include:

- Escape of consumables due to leakages, rupture of lines and containers etc.
- Risk of accident when driving over difficult ground such as gradients, very smooth or uneven surfaces, or with poor visibility etc.
- Falling, tripping etc. on the truck, especially in wet weather, with leaking consumables or on icy surfaces
- Risk of fire and explosion from the batteries and electrical voltages
- Human error resulting from failure to observe the safety regulations
- Unrepaired damage or faulty and worn components
- Insufficient maintenance and testing
- Use of incorrect consumables
- Exceeding test intervals

If the operating company negligently or intentionally fails to comply with these require-

ments, this can lead to an accident. In this case, the manufacturer is exempt from liability.

### Stability

The stability of the truck has been tested to the latest technological standards. If the truck is used in the proper manner and in accordance with its intended use, the stability of the truck is guaranteed. These standards only take into account the dynamic and static tipping forces that can arise when used in accordance with the specified operating rules and intended use. The danger of exceeding the moment of tilt and losing stability due to improper or incorrect operation can never be ruled out.

The loss of stability can be avoided or minimised by complying with following principles:

- Always secure the load against slipping, e.g. by lashing.
- Always transport unstable loads in suitable containers.
- Always drive slowly when cornering.
- Drive with the load lowered.
- On trucks fitted with a sideshift, align and transport loads such that the load centre of gravity is positioned centrally to the truck.
- Avoid turning and diagonally driving across slopes or gradients.
- Never have the load facing downhill when travelling on slopes or gradients.
- Always take great care when transporting suspended loads.
- Do not drive over ramp edges or steps.

## Special risks associated with using the truck and attachments

Approval from the manufacturer and attachment manufacturer must be obtained each time the truck is used in a manner that falls outside the scope of normal use, and in cases where the driver is not certain that he can

use the truck correctly and without the risk of accidents.

## Overview of hazards and countermeasures

NOTE

*This table is intended to help evaluate the hazards in your facility and applies to all drive types. It does not claim to be complete.*

– Observe the national regulations for the country in which the truck is being used.

| Hazard | Course of action | Check note<br>√ done<br>- Not applicable | Notes |
|---|---|---|---|
| Truck equipment does not comply with local regulations | Testing | O | If in doubt, consult the responsible factory inspectorate or employers' liability insurance association |
| Driver's lack of skills or qualifications | Driver training (sit-on and stand-on) | O | DGUV principle 308-001<br>VDI 3313 driver's licence |
| Usage by unauthorised persons | Access with key only for authorised persons | O | |
| Truck not safe for operation | Periodic inspection and rectification of defects | O | German Ordinance on Industrial Safety and Health (BetrSichV) |
| Risk of falling when using working platforms | Compliance with national regulations (different national laws) | O | German Ordinance on Industrial Safety and Health (BetrSichV) and employer's liability insurance associations |
| Impaired visibility due to load | Application planning | O | German Ordinance on Industrial Safety and Health (BetrSichV) |
| Contamination of breathable air | Assessment of diesel exhaust gases | O | Technical Regulations for Hazardous Substances (TRGS) 554 and the German Ordinance on Industrial Safety and Health (BetrSichV) |
| | Assessment of LPG exhaust gases | O | German threshold limit values list (MAK-Liste) and the German Ordinance on Industrial Safety and Health (BetrSichV) |

| Hazard | Course of action | Check note<br>√ done<br>- Not applicable | Notes |
|---|---|---|---|
| Impermissible usage (improper usage) | Provide operating instructions | O | German Ordinance on Industrial Safety and Health (BetrSichV) and German Health and labour protection law (ArbSchG) |
| | Written notice of instruction to driver | O | German Ordinance on Industrial Safety and Health (BetrSichV) and German Health and labour protection law (ArbSchG) |
| | German Ordinance on Industrial Safety and Health (BetrSichV), observe the operating instructions | O | |
| When fuelling | | | |
| a) Diesel | German Ordinance on Industrial Safety and Health (BetrSichV), observe the operating instructions | O | |
| b) LPG | DGUV regulation 79, observe the operating instructions | O | |
| When charging the drive battery | German Ordinance on Industrial Safety and Health (BetrSichV), observe the operating instructions | O | VDE 0510-47<br>(= DIN EN 62485-3): In particular<br>- Ensure adequate ventilation<br>- Insulation value within the permissible range |
| When using battery chargers | German Ordinance on Industrial Safety and Health (BetrSichV), DGUV rule 113-001 and observe the operating instructions | O | German Ordinance on Industrial Safety and Health (BetrSichV) and DGUV rule 113-001 |
| When parking LPG trucks | German Ordinance on Industrial Safety and Health (BetrSichV), | O | German Ordinance on Industrial Safety and Health (BetrSichV) and DGUV rule 113-001 |

| Hazard | Course of action | Check note<br>√ done<br>- Not applicable | Notes |
|---|---|---|---|
| | DGUV rule 113-001 and observe the operating instructions | | |
| When operating driverless transport systems | | | |
| Roadway quality inadequate | Clean/clear roadways | O | German Ordinance on Industrial Safety and Health (BetrSichV) |
| Loading equipment incorrect/slipped | Reposition load on pallet | O | German Ordinance on Industrial Safety and Health (BetrSichV) |
| Unpredictable driving behaviour | Employee training | O | German Ordinance on Industrial Safety and Health (BetrSichV) |
| Routes blocked | Mark routes<br>Keep roadways clear | O | German Ordinance on Industrial Safety and Health (BetrSichV) |
| Routes intersect | Announce right-of-way rule | O | German Ordinance on Industrial Safety and Health (BetrSichV) |
| No person detection when placing goods into stock and removing goods from stock | Employee training | O | German Ordinance on Industrial Safety and Health (BetrSichV) |

## Danger to employees

According to the German Ordinance on Industrial Safety and Health (BetrSichV) and labour protection law (ArbSchG), the operating company must determine and assess hazards during operation, and establish the labour protection measures required for employees (BetrSichVO). The operating company must therefore draw up appropriate operating instructions (§ 6 ArbSchG) and nominate a person who is responsible for these operating instructions. Drivers must be informed of the operating instructions that apply to them.

**NOTE**

*Please note the definition of the following responsible persons: "operating company" and "driver".*

The design and equipment of the truck comply with the standards and directives required for CE conformity. The design and equipment also comply with the standards and directives necessary for the UKCA compliance that is required in the United Kingdom. The design and equipment are therefore not part of the required scope of the hazard assessment. The same applies to attachments with their own CE labelling and UKCA labelling. The operating company must, however, select the type and equipment of the trucks so as to comply with the local provisions for deployment.

The result of the hazard assessment must be documented (§ 6 ArbSchG). In the case of truck applications involving similar hazard situations, the results may be summarised. Refer to the chapter entitled "Overview of hazards and countermeasures", which provides advice on complying with this regulation. The overview specifies the primary hazards that, in the event of non-compliance, are the most frequent causes of accidents. If other major hazards are present as a result of the specific operating conditions, these hazards must also be taken into consideration.

The conditions of use for trucks are broadly similar in many plants, so the hazards can be summarised in one overview. Observe the information provided by the relevant employers' liability insurance association on this subject.

# Safety tests

## Carrying out regular inspections on the truck ▷

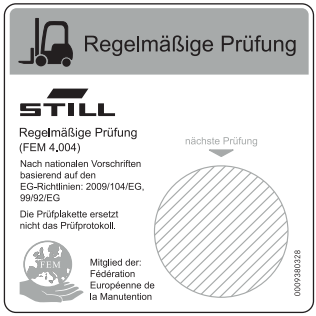

6219_003-020

The operating company must ensure that the truck is checked by a specialist at least once a year or after particular incidents.

As part of this inspection, the technical condition of the truck must be completely tested with regard to accident safety. In addition, the truck must be thoroughly checked for damage that may have been caused by improper use. A test log must be created. The results of the inspection must be retained at least until a further two inspections have been carried out.

The inspection date is indicated by an adhesive label on the truck.

– Arrange for the authorised service centre to perform regular testing on the truck.
– Observe the guidelines for tests carried out on the truck in accordance with FEM 4.004.

The operating company is responsible for ensuring that any defects are remedied without delay.

– Notify your authorised service centre.

**NOTE**

*In addition, observe the national regulations for the country of use.*

## Insulation testing

The insulation of the truck must have sufficient insulation resistance. For this reason, insulation testing in accordance with DIN EN 1175 and DIN 43539, VDE 0117 and VDE 0510 must be conducted at least once yearly as part of the FEM testing.

The insulation testing results must be at least the test values given in the following two tables.

– For insulation testing, contact the authorised service centre.

The exact procedure for this insulation testing is described in the workshop manual for this truck.

NOTE

*The truck's electrical system and drive batteries must be checked separately.*

## Test values for the drive battery

| Component | Recommended test voltage | Measurements | | Nominal voltage $U_{Batt}$ | Test values |
|---|---|---|---|---|---|
| Battery | 50 VDC | Batt+<br>Batt- | Battery tray | 24 volts | > 1200 Ω |
| | 100 VDC | | | 48 volts | > 2400 Ω |
| | 100 VDC | | | 80 volts | > 4000 Ω |

## Test values for the entire truck

| Nominal voltage | Test voltage | Test values for new trucks | Minimum values over the duration of the service life |
|---|---|---|---|
| 24 volts | 50 VDC | Min. 50 kΩ | > 24 kΩ |
| 48 volts | 100 VDC | Min. 100 kΩ | > 48 kΩ |
| 80 volts | 100 VDC | Min. 200 kΩ | > 80 kΩ |

## Regularly testing the electrical safety

The on-board charger and the associated charging cable must be tested at least once a year. This test must be carried out in accordance with the national regulations for the country of use (e.g. DIN EN 50678 & DIN EN 50699 in Germany). Contact the authorised service centre regarding this matter.

The test sticker is glued to the sticker panel by the testing technician. The due date for the next testing is always at the top of the sticker.

– Before each use, check the charging cable for damage.

– Do **not** use a damaged charging cable.

▷

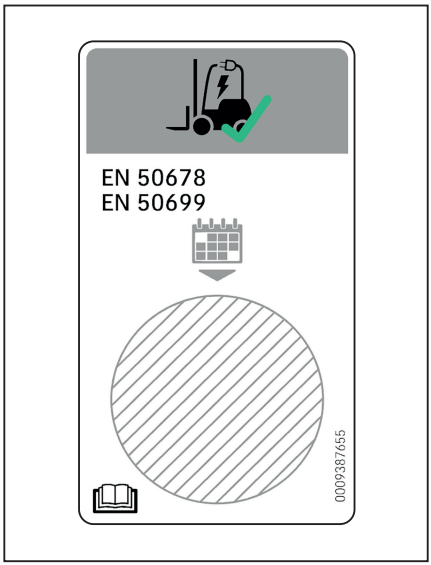

# Safety regulations for handling consumables

## Permissible consumables

**⚠ WARNING**

Consumables can be dangerous!

– Observe general information and safety information regarding the use of consumables.

– Refer to the chapter entitled "Safety regulations for handling consumables".

– Note the safety datasheets provided by the manufacturer of the consumables in question.

– Only use consumables that are approved for use with this truck. The permissible consumables can be found in the maintenance data table.

## Oils

**⚠ DANGER**

**Oils are flammable!**

– Follow the statutory regulations.

– Do not allow oils to come into contact with hot engine parts.

– No smoking, fires or naked flames!

**⚠ DANGER**

**Oils are toxic!**

– Avoid contact and consumption.

– If vapour or fumes are inhaled, move to fresh air immediately.

– In the event of contact with the eyes, rinse thoroughly (for at least 10 minutes) with water and then consult an eye specialist.

– If swallowed, do not induce vomiting. Seek immediate medical attention.

**⚠ WARNING**

Prolonged intensive contact with the skin can result in dryness and irritate the skin!

– Avoid contact and consumption.
– Wear protective gloves.
– After any contact, wash the skin with soap and water, and then apply a skin care product.
– Immediately change soaked clothing and shoes.

**⚠ WARNING**

There is a risk of slipping on spilled oil, particularly when combined with water!

– Spilt oil should be removed immediately with oil-binding agents and disposed of according to the regulations.

**ENVIRONMENT NOTE**

*Oil is a water-polluting substance!*

- *Always store oil in containers that comply with the applicable regulations.*
- *Avoid spilling oils.*
- *Spilt oil should be removed immediately with oil-binding agents and disposed of according to the regulations.*
- *Dispose of old oils according to the regulations.*

## Hydraulic fluid

**⚠ WARNING**

These fluids are pressurised during operation of the truck and are hazardous to your health.

– Do not spill the fluids.
– Follow the statutory regulations.
– Do not allow the fluids to come into contact with hot engine parts.

**⚠ WARNING**

These fluids are pressurised during operation of the truck and are hazardous to your health.

– Do not allow the fluids to come into contact with the skin.

– Avoid inhaling spray.

– Penetration of pressurised fluids into the skin is particularly dangerous if these fluids escape at high pressure due to leaks in the hydraulic system. In case of such injury, immediate medical assistance is required.

– To avoid injury, use appropriate personal protective equipment (e.g. protective gloves, industrial goggles, skin protection and skin care products).

**ENVIRONMENT NOTE**

*Hydraulic fluid is a water-polluting substance.*

- *Always store hydraulic fluid in containers that comply with regulations*
- *Avoid spills*
- *Spilt hydraulic fluid should be removed immediately with oil-binding agents and disposed of according to the regulations*
- *Dispose of old hydraulic fluid according to the regulations*

## Battery acid

**⚠ WARNING**

Battery acid contains dissolved sulphuric acid. This is toxic.

– Avoid touching or swallowing the battery acid at all costs.

– In case of injury, seek medical advice immediately.

**⚠ WARNING**

Battery acid contains dissolved sulphuric acid. This is corrosive.

- When working with battery acid, use appropriate PSA (rubber gloves, apron, protection goggles).
- When working with battery acid, never wear a watch or jewellery.
- Do not allow any acid to get onto clothing or skin or into the eyes. If this does happen, rinse immediately with plenty of clean water.
- In case of injury, seek medical advice immediately.
- Immediately rinse away spilt battery acid with plenty of water.
- Follow the statutory regulations.

**ENVIRONMENT NOTE**

- Dispose of used battery acid in line with the applicable regulations.

## Disposal of consumables

**ENVIRONMENT NOTE**

*Materials that accumulate during repair, maintenance and cleaning must be collected properly and disposed of in accordance with the national regulations for the country in which the truck is being used. Work must only be carried out in areas designated for the purpose. Care must be taken to minimise any environmental pollution.*

- Soak up any spilt fluids such as hydraulic oil, brake fluid or gearbox oil using an oil-binding agent.
- Neutralise any spilt battery acid immediately.
- Always observe national regulations concerning the disposal of used oil.

# Emissions

The values specified apply to a standard truck (compare the specifications in the "Technical data" chapter). Different tyres, lift masts, additional units etc. may produce different values.

## Noise emissions

The values were determined based on measuring procedures from the standard EN 12053 "Safety of industrial trucks - Test methods for measuring noise emissions", based on EN 12001, EN ISO 3744 and the requirements of EN ISO 4871.

This machine emits the following sound pressure level:

**Continuous sound pressure level in the driver's compartment**

| $L_{pAZ}$ | Measurement uncertainty $K_{pA}$ |
|---|---|
| 70 dB(A) | 4 dB(A) |

The values were determined in the test cycle on an identical machine from the weighted values for operating statuses and idling.

Time proportions:

- Lifting 18%
- Idling 58%
- Driving 24%

However, the indicated noise levels at the truck cannot be used to determine the noise emissions at workplaces according to the most recent version of **Directive 2003/10/EC** (daily personal noise pollution). If necessary, these noise emissions must be determined by the operating company directly at the workplaces under the actual conditions there (additional noise sources, special application conditions, sound reflections).

Observe the applicable national regulations in non-EU countries.

**NOTE**

*Please note the definition of the following responsible person: "operating company".*

## Vibrations

The vibrations of the machine have been determined on an identical machine in accordance with the standards DIN EN 13059 "Safety of industrial trucks - Test methods for measuring vibration" and DIN EN 12096 "Mechanical vibration - Declaration and verification of vibration emission values".

**Frequency-weighted effective value of acceleration on the seat**

| MSG 65 driver's seat | Uncertainty of measurement |
|---|---|
| 0.57 $m/s^2$ | 0.17 |

Tests have indicated that the amplitude of the hand and arm vibrations on the steering wheel or on the operating devices in the truck is less than 2.5 $m/s^2$. There are therefore no measurement guidelines for these measurements.

The personal vibration load on the driver over a working day must be determined by the operating company at the actual place of use in accordance with **Directive 2002/44/EC**, in order to consider all additional influences, such as driving route, intensity of use etc.

Observe the applicable national regulations in non-EU countries.

**NOTE**

*Please note the definition of the following responsible person: "operating company".*

## Battery

**⚠ DANGER**

**Risk of explosion due to flammable gases!**

During charging, the lead-acid battery releases a mixture of oxygen and hydrogen (oxyhydrogen gas). This gas mixture is explosive and must not be ignited.

- Make sure that there is always sufficient ventilation in working areas that are entirely or partially enclosed.
- Keep away from open flames and flying sparks.
- Do not smoke.
- Observe the safety regulations for handling the battery.

## Radiation

In accordance with the guidelines DIN EN 62471:2009-03 (VDE 0837-471:2009-03), the STILL Safety-Light and the warning zone light (variant) are assigned to risk group 2 (medium risk) due to their photobiological hazard potential.

The Laser-Smartfork assistance system (variant) is assigned to laser class 1M.

**⚠ DANGER**

**Risk of injury! Looking into the laser beam can damage the eyes, laser radiation (laser class 1M).**

- If there is a possibility that people are at risk, switch off the laser immediately.
- Never look directly into the laser beam.
- Never look into the laser beam with a magnifying lens such as binoculars or a magnifying glass.
- If the beam hits your eye, close your eyes immediately and turn away.
- Ensure that the laser beam cannot be reflected by mirrors or reflective surfaces.
- Never direct the laser beam at a person's face.

# 3

# Overviews

# Overview

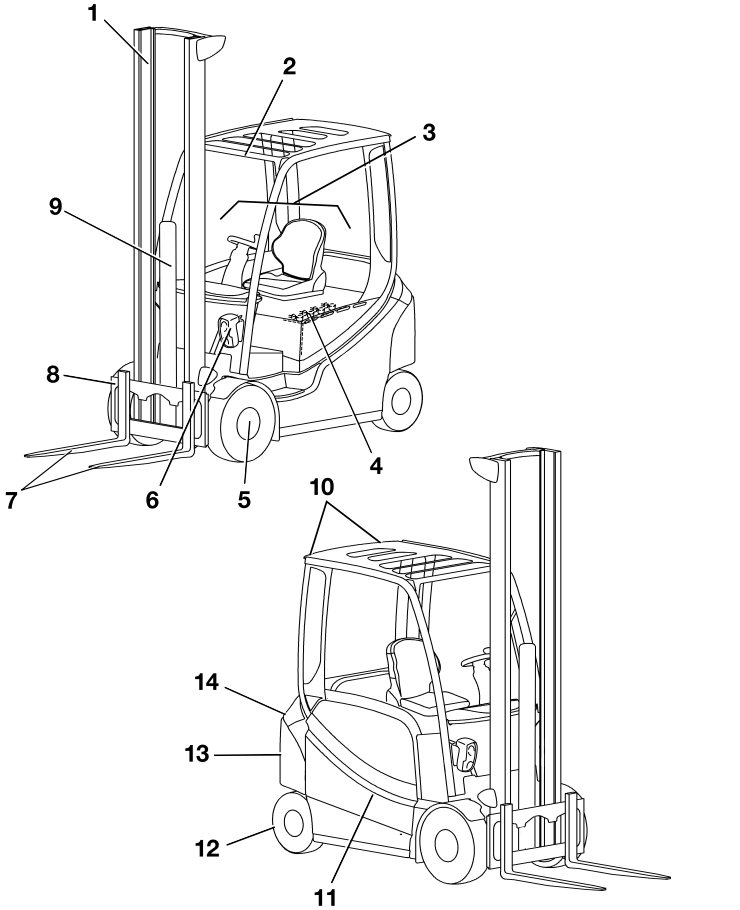


6301_003-020

| | | | |
|---|---|---|---|
| 1 | Lift mast | 8 | Fork carriage |
| 2 | Overhead guard | 9 | Lift cylinder |
| 3 | Driver's compartment | 10 | Rear lighting |
| 4 | Battery (in the battery compartment) | 11 | Battery door |
| 5 | Drive axle | 12 | Steering axle |
| 6 | Front lighting | 13 | Towing device |
| 7 | Fork arms | 14 | Counterweight |

**NOTE**

*The truck equipment may differ from the equipment shown.*

# Driver's compartment

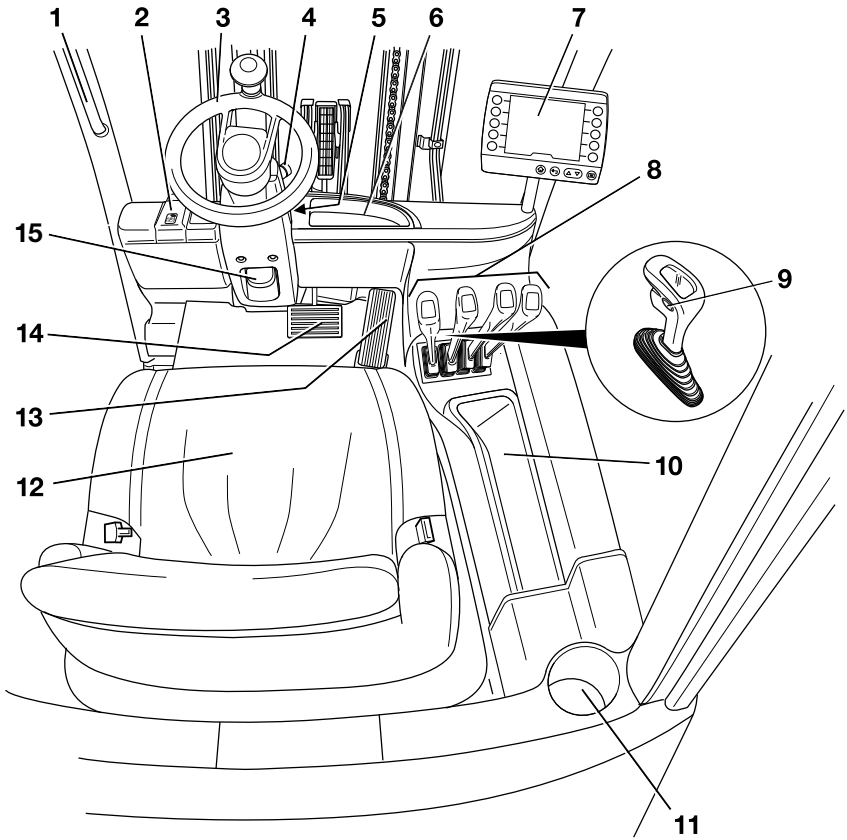


6301_003-003

1 Handle
2 Parking brake
3 Steering wheel
4 Emergency off switch
5 Key switch
6 Compartment
7 Display/control unit "STILL Easy Control"
8 Operating devices for hydraulic and driving functions
9 Signal horn button
10 Compartment for storing the operating instructions and the hexagon socket wrench for emergency lowering
This compartment also contains the diagnostic connection.
11 Cup holder for max. 1.5-litre bottles
12 Driver's seat
13 Accelerator pedal
14 Brake pedal
15 Steering column adjustment lever

**NOTE**

*The truck equipment may differ from the equipment shown.*

## Shelf and cup holder

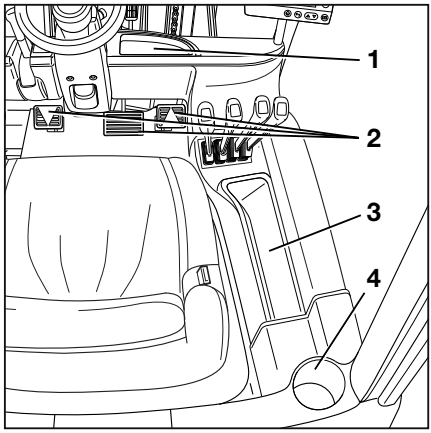


**WARNING**

Risk of accident caused by blocked pedals!

Objects may fall into the footwell during travel as a result of steering or braking. They can slip between and under the pedals (2). They then block the pedals. It may then not be possible to brake the truck when necessary.

- Only store objects that fit on the shelves(1, 3).
- Bottles with a maximum size of 1.5 litres may be stored in the cup holder (3).
- Make sure that objects cannot fall off the shelves when the truck sets off, is steered or braked.

The truck is equipped with a compartment (3) for the operating instructions and the hexagon socket wrench for emergency lowering. The cup holder (3) holds bottles up to 1.5 litres in size. If the truck is equipped with a heating system (variant), the compartment is omitted (1).

# Operating devices and display elements

## Display-operating unit "STILL Easy Control"

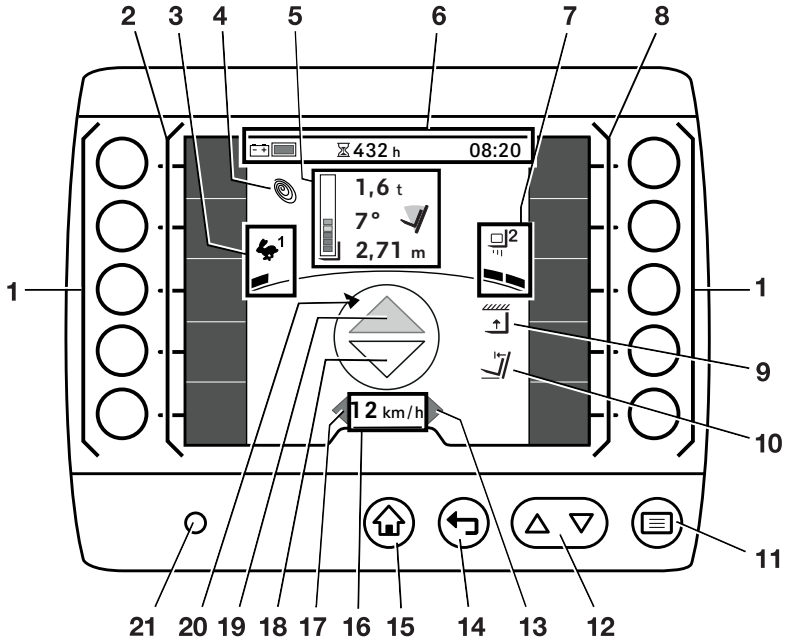


1 Softkeys
2 Left-hand favourites bar
3 Selected drive programme with driving dynamics display
4 Blue-Q symbol
5 Load information (variants):
Load measurement
Lift-mast tilt angle
Lift height
Bar display
6 Status bar: battery charge, operating hours, time
7 Selected load programme with load dynamics display
8 Right-hand favourites bar
9 Lift height restriction
10 Automatic mast vertical positioning
11 Menu button
12 Scrolling buttons
13 "Right" turn indicator display
14 Back button
15 Main display button
16 Driving speed or parking brake Ⓟ
17 "Left" turn indicator display
18 "Reverse" drive direction indicator
19 "Forward" drive direction indicator
20 Display for direction of movement of the truck
21 Brightness sensor

"STILL Easy Control" is a third-generation display-operating unit for industrial trucks.

It is used as an operating device for the usual functions of the truck, such as controlling lighting and windscreen wiper functions and adjusting the driving dynamics.

It also shows information about the status of the truck, such as the battery charge level, display messages and operating hours.

The displays shown in this figure are examples. The display-operating unit provides further display options that can be configured by the driver or fleet manager.

– For information about the other display options, see the original operating instructions entitled "STILL Easy Control display-operating unit".

The display-operating unit is attached to the armrest, except in trucks equipped with multi-lever operation. If the truck is equipped with multi-lever operation, the display-operating unit is swivel-mounted on the right A-pillar.

– For information on swivelling the display-operating unit, see the section entitled "Adjusting the swivelling display-operating unit" in the chapter entitled "Checks and tasks before daily use".

NOTE

*Do not put a label over the brightness sensor (21) or cover it with anything. This sensor allows the display to adapt to the current light conditions.*

## Lithium-ion battery display

The lithium-ion battery display is located on the side of the battery tray. In addition to the display-operating unit, the lithium-ion battery display also shows the charging status and information relating to the lithium-ion battery.

– Observe the chapter entitled "Display elements" in the STILL "Lithium-ion batteries" operating instructions.

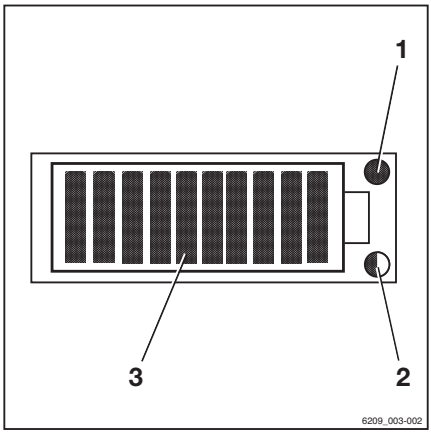


1 Service LED (red)
2 Temperature LED (yellow/red)
3 Charge state LEDs (red/green)

## Emergency off switch

The emergency off switch (1) is situated on the right-hand side of the steering column. It disconnects the drives from the power supply.

**Do not** use this switch to park the truck safely.

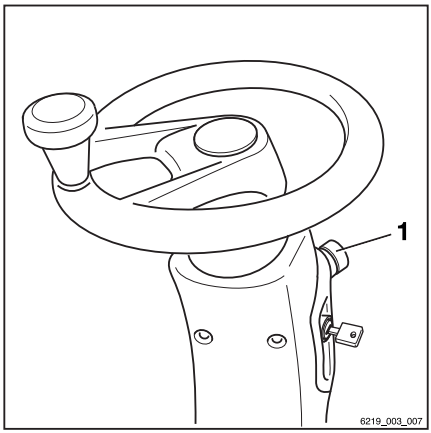

# Multi-lever operation

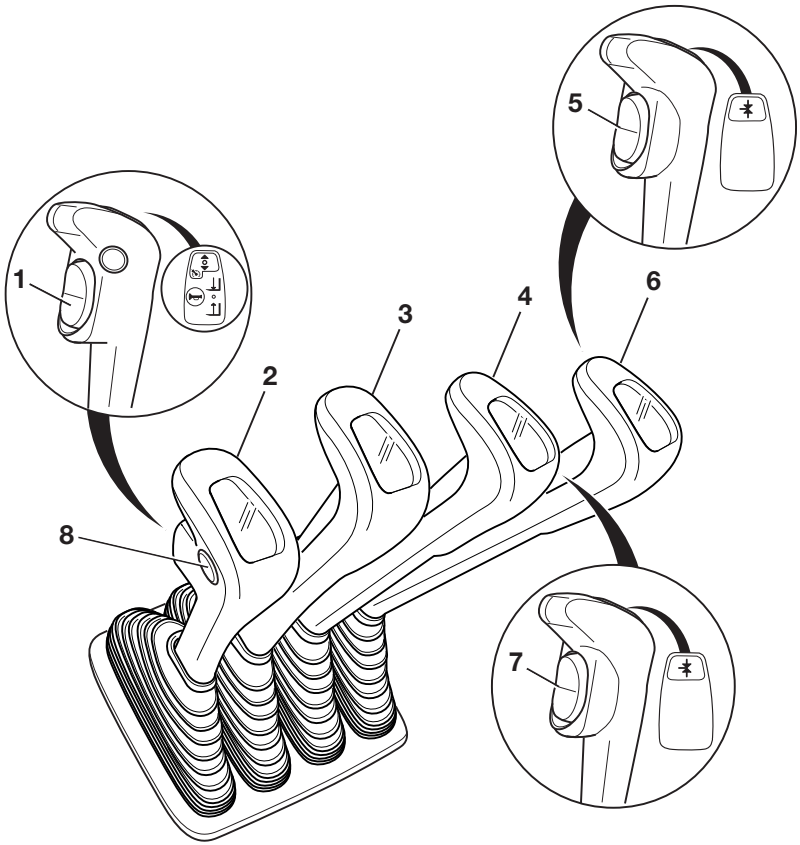


| | | | |
|---|---|---|---|
| 1 | Drive direction switch | 6 | Operating lever for attachments (variant) |
| 2 | "Lift/lower" operating lever | 7 | Function key for the "5th or 6th function" (variants) |
| 3 | "Tilt" operating lever | 8 | Signal horn button |
| 4 | Operating lever for attachments (variant) | | |
| 5 | Function key for the "5th function" (variant) | | |

**NOTE**

*In the dual-pedal version (variant), the drive direction switch (1) is used exclusively to activate the cruise control function (variant). The drive direction is selected exclusively via the pedals in the dual-pedal version.*

# Double mini-lever

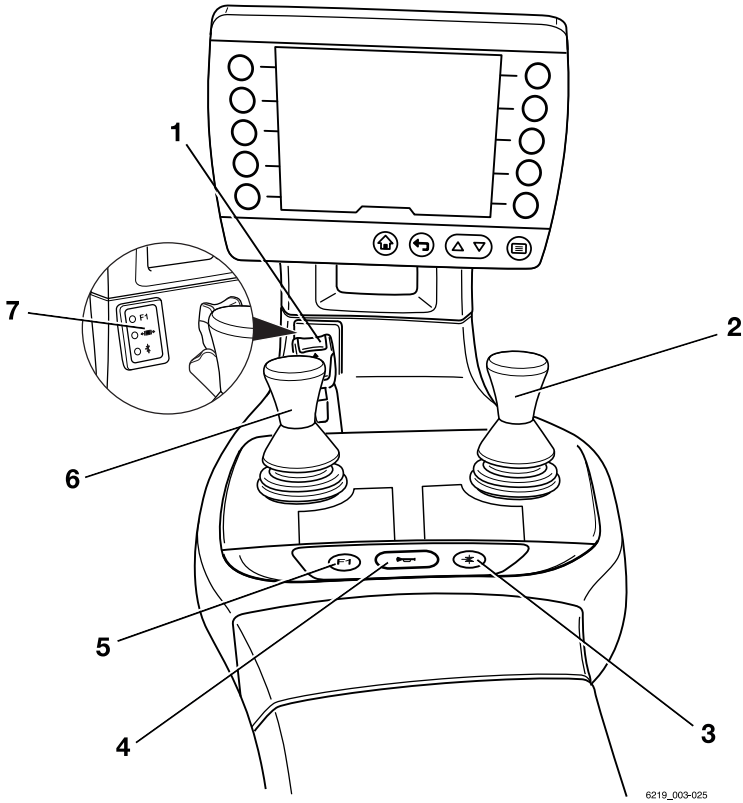


| | | | |
|---|---|---|---|
| 1 | Drive direction switch | 5 | "F1" function key |
| 2 | Cross lever "Attachments" | 6 | "Lift mast" 360° lever |
| 3 | Function key for the "5th function" | 7 | Display field for the hydraulic functions |
| 4 | Signal horn button | | |

NOTE

- *In the dual-pedal version (variant), the drive direction switch (1) is used exclusively to activate the cruise control function (variant). The drive direction is selected exclusively via the pedals in the dual-pedal version.*
- *The authorised service centre can assign different functions to the "F1" function key (5).*

# Triple mini-lever

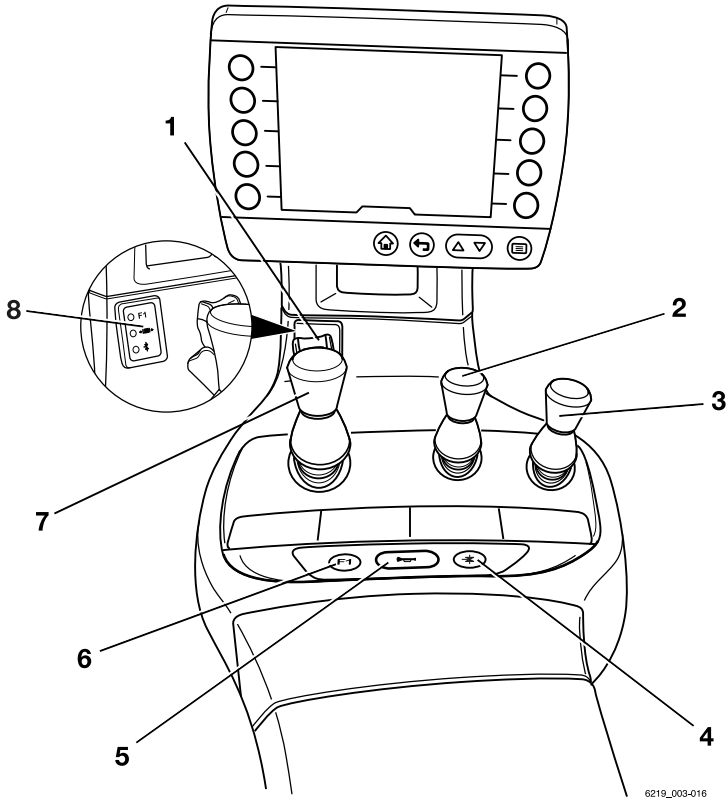


| | | | |
|---|---|---|---|
| 1 | Drive direction switch | 5 | Signal horn button |
| 2 | "Auxiliary hydraulics 1" operating lever | 6 | "F1" function key |
| 3 | "Auxiliary hydraulics 2" operating lever | 7 | "Lift mast" 360° lever |
| 4 | Function key for the "5th function" | 8 | Display field for the hydraulic functions |

NOTE

- *In the dual-pedal version (variant), the drive direction switch (1) is used exclusively to activate the cruise control function (variant). The drive direction is selected exclusively via the pedals in the dual-pedal version.*
- *The authorised service centre can assign different functions to the "F1" function key (6).*

# Quadruple mini-lever

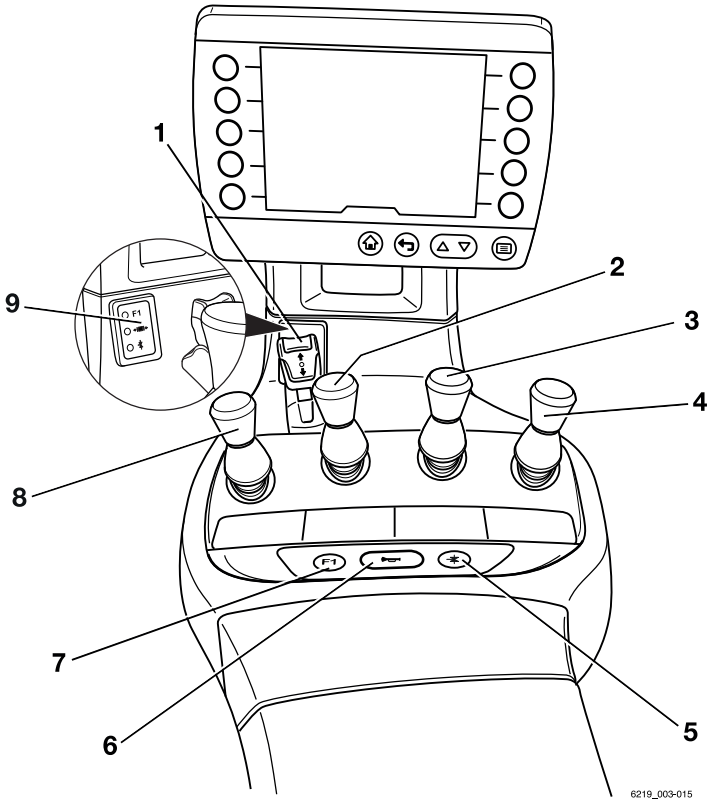


| | | | |
|---|---|---|---|
| 1 | Drive direction switch | 6 | Signal horn button |
| 2 | "Tilt" operating lever | 7 | "F1" function key |
| 3 | "Auxiliary hydraulics 1" operating lever | 8 | "Lift/lower" operating lever |
| 4 | "Auxiliary hydraulics 2" operating lever | 9 | Display field for the hydraulic functions |
| 5 | Function key for the "5th function" | | |

NOTE

- *In the dual-pedal version (variant), the drive direction switch (1) is used exclusively to activate the cruise control function (variant). The drive direction is selected exclusively via the pedals in the dual-pedal version.*
- *The authorised service centre can assign different functions to the "F1" function key (7).*

# Fingertip

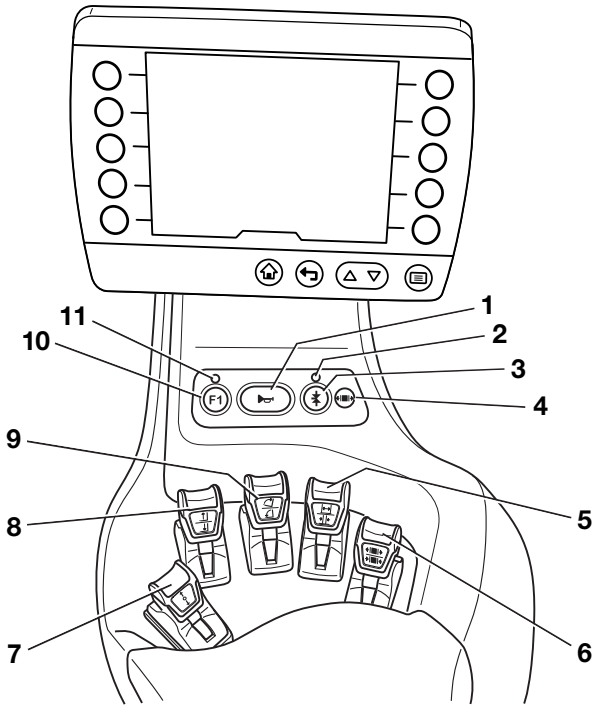


| | | | |
|---|---|---|---|
| 1 | Signal horn button | 7 | Drive direction switch |
| 2 | LED for the "5th function" | 8 | "Lift/lower" operating lever |
| 3 | Function key for the "5th function" | 9 | "Tilt" operating lever |
| 4 | LED for the "Clamp release" | 10 | "F1" function key |
| 5 | Operating lever for "Auxiliary hydraulics 1" | 11 | LED for "F1" |
| 6 | Operating lever for "Auxiliary hydraulics 2" | | |

NOTE

- *In the dual-pedal version (variant), the drive direction switch (7) is used exclusively to activate the cruise control function (variant). The drive direction is selected exclusively via the pedals in the dual-pedal version.*
- *The authorised service centre can assign different functions to the "F1" function key (10).*

# Joystick 4Plus

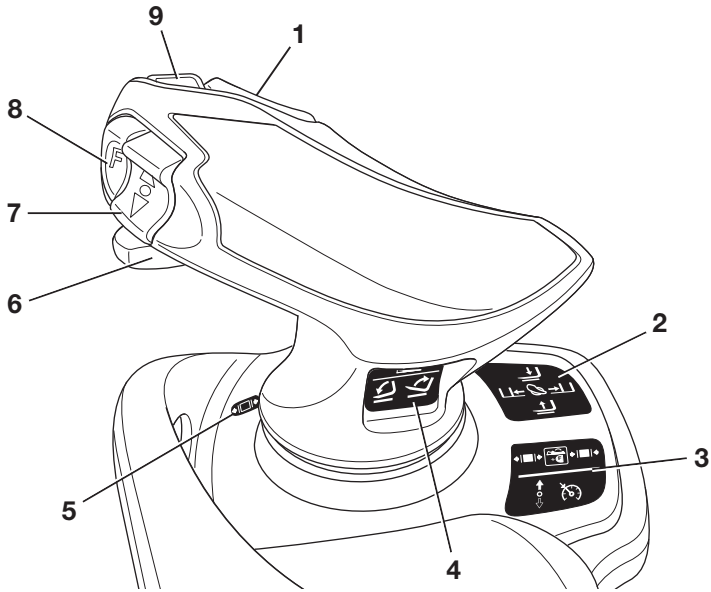


1 Horizontal rocker button for the "3rd and 4th hydraulic function": tilting the lift mast
2 Pictograms for the hydraulic functions: lifting, lowering and sideshift
3 Pictograms for the 5th hydraulic function and for the clamp locking mechanism (variant)
4 Pictograms for the 3rd and 4th hydraulic function
5 LED for the "clamp release" (variant)
6 Slider for the "4th hydraulic function"
7 Vertical rocker button for the "drive direction"
8 Shift key "F"
9 Signal horn button

NOTE

- *In the dual-pedal version (variant), the vertical "drive direction" rocker button (7) is used exclusively to activate the cruise control function (variant). The drive direction is selected exclusively via the pedals in the dual-pedal version.*
- *The authorised service centre can assign different functions to the shift key "F" (8), e.g. switchover of the control axles for actuation of the 5th hydraulic function.*

## Travel direction selector and indicator module (variant) ▷

The travel direction selector and indicator module is located on the steering column below the steering wheel.

NOTE

*If the drive direction switch on the operating device is defective and the truck stops in a danger area, the drive direction selection lever on the travel direction selector and indicator module can be used for emergency driving. Refer to the section entitled "Emergency driving via the drive direction switch/drive direction selection lever" in the chapter entitled "Procedure in emergencies".*

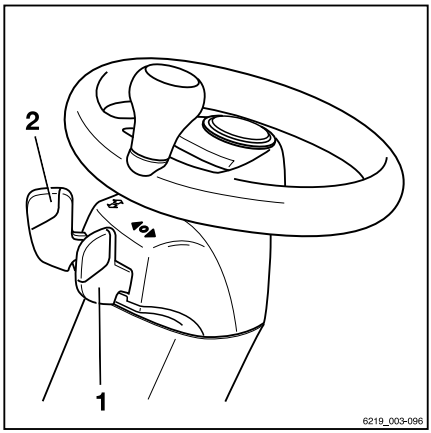


1 Drive direction selection lever
2 Turn indicator switch

# 4

# Operation

# Checks and tasks before daily use

## Visual inspections and function checking

**⚠ WARNING**

Risk of injury from falling off the truck!

When climbing onto the truck, there is a risk of getting stuck or slipping and falling. Use suitable equipment to reach higher points on the truck.

- Use only the steps provided for this purpose to climb onto the truck.
- Use equipment such as stepladders or platforms to reach inaccessible areas.

Damage to the truck or the attachment (variant), non-functional switches or safety systems and modification of predefined set values can lead to unpredictable and dangerous situations. To ensure that the truck can be operated safely, the visual inspections and function checking must be carried out before daily use. The components that must be checked and their check points are listed in the following table. If damage or other defects are identified on the truck or the attachment (variant) during the following inspections, the truck must not be used until it has been properly repaired. Damage or other defects must be reported to the supervisor or the responsible fleet manager immediately so that repairs by the authorised service centre can be arranged.

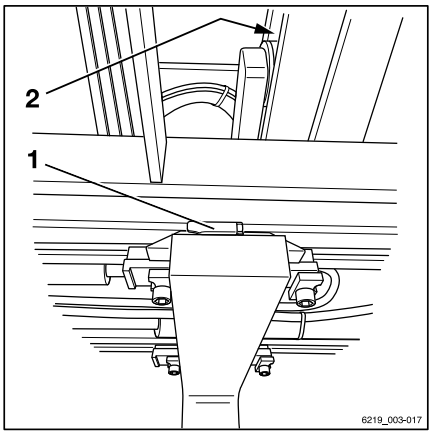


Fork arms and roller tracks

**Ensure that the truck is safe for operation each day before it is used:**

| Component | Course of action |
|---|---|
| Fork arms, general lifting accessories | Perform a visual inspection to check for deformation and wear (e.g. to check if they are bent, broken or feature significant wear).<br>Check the condition and function of the safety devices (1) to prevent lifting and shifting. |
| Roller tracks (2) | Make sure that there is a film of grease. |
| Load chains | Perform a visual inspection to ensure that the chains are intact and have adequate and even tension. |

| Component | Course of action |
|---|---|
| Attachments (variant) | Ensure that the attachments are mounted correctly in accordance with the operating instructions from the manufacturer.<br>Perform a visual inspection to ensure that the attachments are intact and are leak-tight.<br>Perform checks to ensure that the attachments are working correctly. |
| Lift cylinders, tilt cylinders, tank, valve block, hoses, pipes, connections | Perform a visual inspection for damage and leakages.<br>Have damaged components replaced by the authorised service centre. |
| Underside | Check the area under the truck for leaking consumables. |
| Wheels, tyres | Perform a visual inspection for wear and damage.<br>Make sure that only rims of the same type from the same manufacturer are fitted.<br>In the event of uneven tyre wear, replace both tyres.<br>Observe the safety regulations in the section entitled "Tyres". |
| Axle | Make sure that no consumables are escaping from the axle. |
| Brake system | Check that the truck is working correctly.<br>See the section "Checking the brake system for correct function". |
| Service brake | Check the filling level in the brake fluid reservoir. |
| Overhead guard, guard grille (variant) | Perform a visual inspection for integrity.<br>Check for secure mounting. |
| Steps | Make sure that they are clean (free of ice, not slippery). |
| Panes of glass (variant) | Perform a visual inspection for integrity.<br>Make sure that they are clean (also free of ice). |
| Handholds | Check for secure mounting. |
| Maintenance lids | Check the close function and close the lid. |
| Battery hood | Make sure that there are no unused bores in the battery hood. |
| Battery door | Perform a visual inspection for integrity and deformation.<br>Check that the interlock is in good condition and is working correctly.<br>Check the close function.<br>Close. |
| Battery | Check that the interlock is in good condition and is working correctly.<br>Lock the battery. |

| Component | Course of action |
|---|---|
| Battery male connector and plug connection | Inspect the battery male connector and the plug connection for moisture or any foreign objects that may have become lodged and remove as necessary, e.g. using compressed air.<br>Perform a visual inspection for integrity and deformation.<br>Check the contacts.<br>Have damaged battery male connectors replaced by the authorised service centre. |
| Battery cables | Perform a visual inspection for integrity.<br>Have a damaged battery cable replaced by the authorised service centre. |
| Coupling pin, tow coupling (variant) | Perform a visual inspection for deformation and wear (for example: bent, torn, broken).<br>Check the securing bush in the counterweight for integrity and to ensure that it is working correctly.<br>Check that the linchpin is present and working correctly (chain, rope, split pin).<br>If coupling and decoupling operations are carried out more frequently than two to three times per shift, relubricate the tow coupling (variant) at the lubricating nipple. |
| Labelling, adhesive labels | Check that labels are present and intact/legible.<br>Replace damaged or missing adhesive labels in accordance with the section entitled "Labelling points". |
| Driver's seat, seat belt | Check the integrity and function. |
| Display-operating unit: assistance systems | Check the function of the "assistance systems" listed in the menu. Refer to the section entitled "Function checking of assistance systems". |
| Lighting, warning units | Check the integrity and function. |
| Working hydraulics | To activate all available hydraulic functions once, actuate all hydraulic operating devices once.<br>As a general rule:<br>If hydraulic valves have not been operated for a long time, their function may be impaired. This applies regardless of the type and design of the hydraulic valves.<br>This is especially true for hydraulic functions for attachments that are not used frequently. Even if the attachment is not currently mounted, operate these hydraulic functions as well. |
| Corona electrode (3)<br>(See the following illustration.) | Perform a visual inspection for integrity.<br>Ensure cleanliness.<br>The discharge wires of the corona electrode (3) must not touch the ground. The wires discharge the energy to the air. |

Depending on the tyres, the truck may be fitted with a corona electrode (3). This component ensures that the truck cannot charge statically.

▷

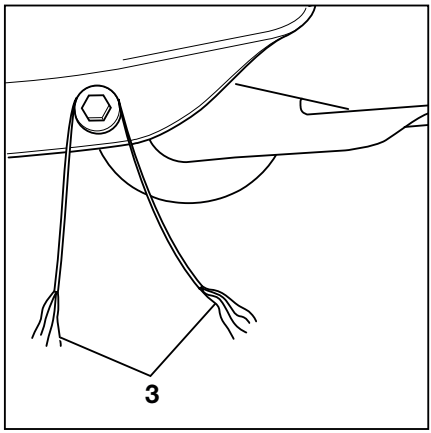


Corona electrode

NOTE

*If the truck is fitted with "non-marking" tyres, the authorised service centre must retrofit a corona electrode.*

– Do not use the truck if there is any damage or defects.

– In this case, contact your authorised service centre.

Any other necessary tasks are summarised under their own headings, e.g. adjusting the driver's seat.

## Climbing into and out of the truck

**WARNING**

Risk of injury when climbing into and out of the truck due to slipping, striking parts of the truck or becoming stuck!

If the footwell cover is very dirty or smeared with oil, there is a risk of slipping. There is also a risk of hitting your head on the post of the overhead guard or of your clothes becoming stuck when climbing out of the truck.

– Ensure that the footwell cover is not slippery.

– Do not jump into or out of the truck.

– Ensure that you have a secure grip on the truck.

**WARNING**

Risk of injury when jumping out of the truck!

If your clothing or jewellery (e.g. watch, ring etc.) becomes stuck on a component while you are jumping into or out of the truck, this can lead to serious injuries (from falling, loss of fingers etc.). It is forbidden to jump out of the truck.

– Do not jump out of the truck.

– Do not wear jewellery at work.

– Do not wear loose-fitting workwear.

**⚠ CAUTION**

Components may become damaged through incorrect use!

Truck components, such as the driver's seat, steering wheel etc., are not designed to be used for climbing in and out of the truck and may be damaged due to misuse.

– Only use the fittings specifically designed for the purpose of climbing into and out of the truck.

To assist with climbing into and out of the truck, use the step (1), use the footwell (2) as a step and use the handle (4) for support. The post of the overhead guard (3) can also be used for support.

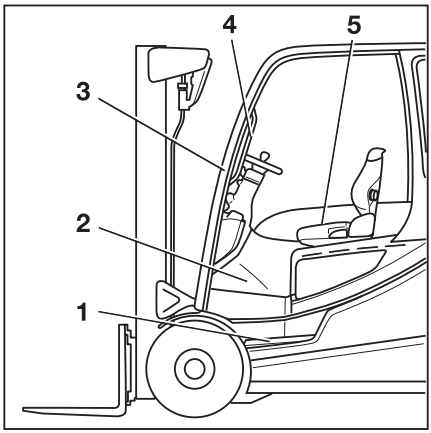


Always **climb into** the truck facing forwards:

– Grip the handle (4) with your left hand and do not let go.

– Place your left foot on the step (1).

– Climb into the truck with your right foot and sit down on the driver's seat (5).

– Next, place your left foot into the footwell (2).

Always **climb out** of the truck backwards:

– Grip the handle (4) with your left hand and do not let go.

– Stand up from the driver's seat (5) and place your left foot on the step (1).

– Climb out of the truck right foot first.

## Climbing in and out of trucks when the driver's compartment is raised (variant)

**⚠ WARNING**

Risk of injury when climbing into and out of the truck due to slipping, striking parts of the truck or becoming stuck!

If the footwell cover is very dirty or smeared with oil, there is a risk of slipping. There is also a risk of hitting your head on the post of the overhead guard or of your clothes becoming stuck when climbing out of the truck.

– Ensure that the footwell cover is not slippery.
– Do not jump into or out of the truck.
– Ensure that you have a secure grip on the truck.

**⚠ WARNING**

Risk of injury when jumping out of the truck!

If your clothing or jewellery (e.g. watch, ring etc.) becomes stuck on a component while you are jumping into or out of the truck, this can lead to serious injuries (from falling, loss of fingers etc.). It is forbidden to jump out of the truck.

– Do **not** jump out of the truck.
– Do not wear jewellery at work.
– Do not wear loose-fitting workwear.

**⚠ CAUTION**

Components may become damaged through incorrect use!

Truck components, such as the driver's seat, steering wheel etc., are not designed to be used for climbing in and out of the truck and may be damaged due to misuse.

– Only use the fittings specifically designed for the purpose of climbing into and out of the truck.

**NOTE**

*The foot that the driver starts with when climbing into and out of the truck is crucial in ensuring that this action is executed safely. This will depend on the number of steps.*

For assistance when climbing into and out of the truck, use the handles (2) and (4) for support. The overhead guard post (1) can also be used for support.

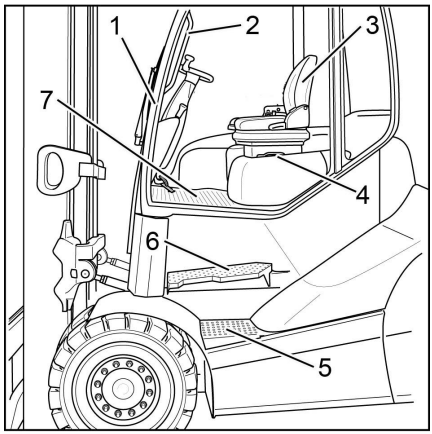


Always **climb into** the truck facing forward:

- If the truck has a driver's cab, open the driver's door.
- Grip the handle (2) with your left hand and do not let go.
- Grip the handle (4) with your right hand and do not let go.
- Place your right foot on the bottom step (5).
- Place your left foot on the top step (6).
- Place your right foot in the footwell (7).
- Enter the truck and sit down on the driver's seat (3).
- Close the driver's door where relevant.

Always **climb out** of the truck backwards:

- If the truck has a driver's cab, open the driver's door.
- Grip the handle (2) with your left hand and do not let go.
- Stand up from the driver's seat and place your left foot on the top step (6).
- Grip the handle (4) with your right hand and do not let go.
- Place your right foot on the bottom step (5).
- Place your left foot on the ground and climb down from the truck.

## Adjusting the driver's seat and armrest

Adjusting the driver's seat and armrest is one of the checks and tasks that must be performed before daily use. The truck can only be operated safely when the seat position is correct.

- Refer to the following chapter entitled "Driver's seat".

## Adjusting the steering column

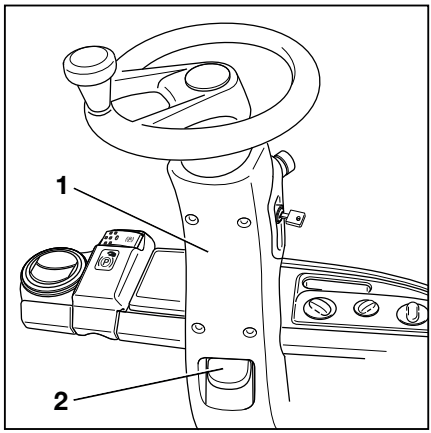


- Pull up and hold the lever (2) for steering column adjustment.
- Position the steering column (1), then push the lever down again and allow the steering column to engage.

**⚠ DANGER**

**Risk of accident!**

- Ensure that the steering column is positioned securely.

The steering column must click into place.

Never adjust the steering column while driving.

## Adjusting the swivelling display-operating unit

If the truck is equipped with multi-lever operation, the display-operating unit is swivel-mounted on the right A-pillar.

The display-operating unit can be swivelled from the neutral position to 15° to the left, right, up and down. The unit cannot rotate around its own axis.

To change the resistance for adjusting the display-operating unit, there are two socket head screws (2) on the support for the display-operating unit. The hexagon socket wrench for emergency lowering can be used to loosen or tighten the socket head screws (2).

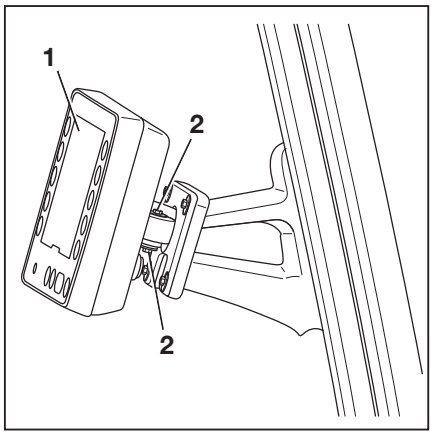


- Loosen the socket head screws (2) as required.
- Hold the display-operating unit (1) in place.
- Adjust the display-operating unit (1) so that it can be read without glare.
- Tighten the socket head screws (2) as required.

NOTE

*If the angle of the display-operating unit changes during driving, tighten the socket head screws. This makes the display-operating unit more secure in the support mounting.*

## Function checking of the assistance systems

Checking the assistance systems is one of the checks and tasks that must be performed before daily use. It is important to know which assistance systems are fitted to the truck. The assistance systems are listed in the display-operating unit.

To display the assistance systems, perform the following steps:

– Apply the parking brake.

– Press the button.

– Press the Softkey.

– Press the `Truck information` softkey.

– Press the `Assistance systems` softkey.

– Check the function of the assistance systems stated in the list before daily use.

– See the respective sections.

NOTE

*The fleet manager can configure some assistance systems.*

– Check whether the assistance systems are correctly configured for daily use.

– If they are not, have the configuration corrected by the fleet manager.

## Unlock the emergency off switch ▷

– Turn the emergency off switch (1) clockwise until it pops out.

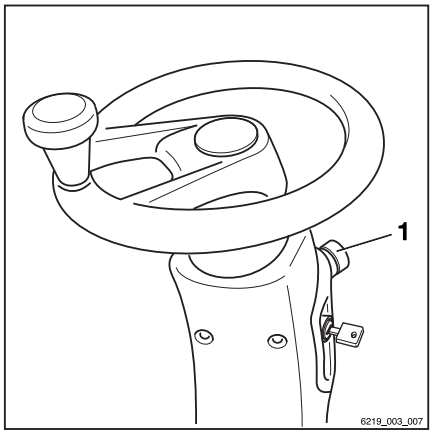


## Checking the emergency off function ▷

**⚠ WARNING**

No electric braking assistance is available when the emergency off switch is actuated!

Actuating the emergency off switch disconnects the drives from the power supply.

– To brake, actuate the service brake.

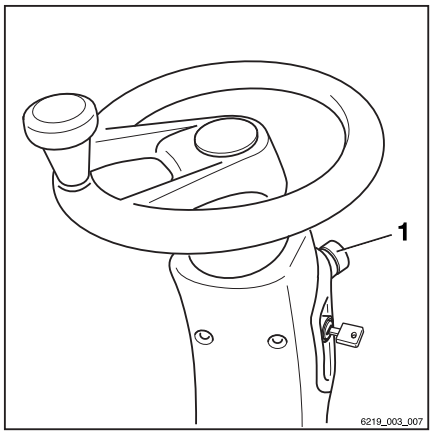


– Drive the truck forwards slowly.

– Push the emergency off switch (1).

The truck will coast to a stop.

The message `Emergency off active` appears on the display/operating unit.

– Stop the truck by actuating the brake pedal.

**NOTE**

*In trucks with an electric parking brake, the electric parking brake will be applied as soon as the truck comes to a stop.*

– Turn the emergency off switch (1) clockwise until it pops out.

The truck performs internal self testing. It is then ready for operation again.

## Operating the signal horn

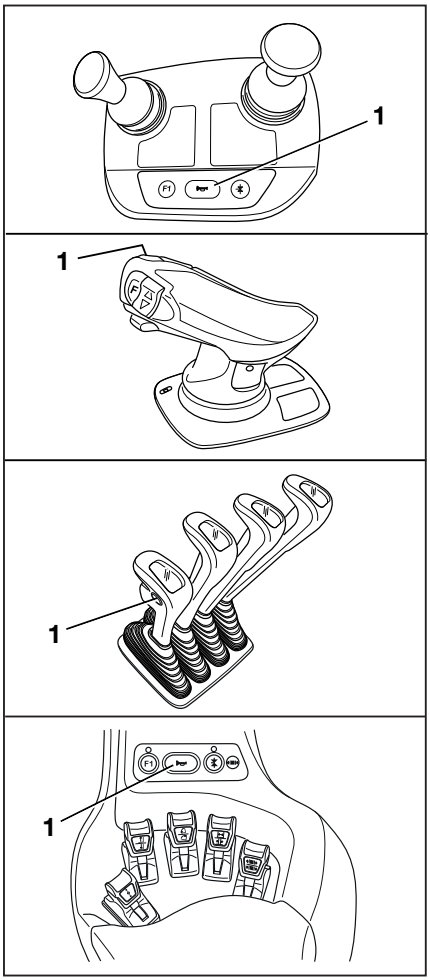


The signal horn is used to warn people against imminent danger or to announce your intention to overtake.

– Press the signal horn button (1).

The signal horn sounds.

## Driver's cab

**⚠ DANGER**

**Risk of fatal injury in the event of falling from the truck if it tips over!**

In order to prevent the driver from sliding underneath the truck and being crushed if the truck tips over, a restraint system must be in place and must be used. The restraint system prevents the driver from being thrown from the truck if it tips over. The cab door must be sturdy and be closed in order for the driver's cab to function as a driver restraint system. Fabric-covered cabs (variant) with doors made of plastic or canvas do not constitute a driver restraint system and offer no protection from the consequences of the truck tipping over!

- Close the cab door before use.
- If the door is open or has been removed, use a comparably secure restraint system.
- We recommend that you always use the seat belt.

## Checking the brake oil level

A brake oil reservoir is located under the cover of the emergency actuation mechanism for the electric parking brake. This brake oil reservoir supplies the oil for the service brake. The service brake is a wet-running multi-disc brake. It needs this oil.

– Lift the cover (1) and fold it up. ▷

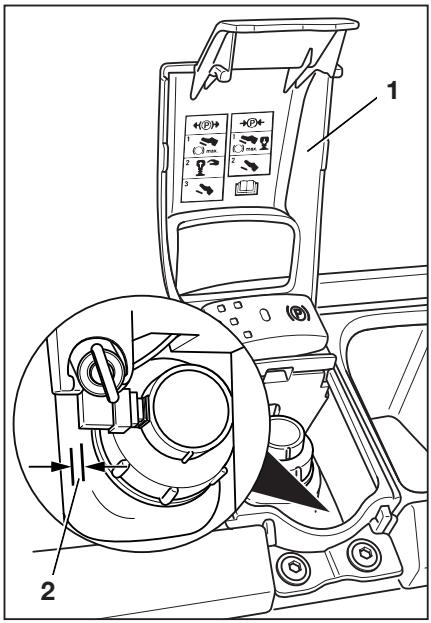


The brake oil level must be within the area (2) of the taper up to the neck. Do not top up the brake oil.

– If the brake oil level is lower than it should be or has visibly dropped, contact the authorised service centre.

– In this case, do not use the truck.

– The authorised service centre must rectify the cause of the reduced brake oil.

# Checking the brake system for correct function

**⚠ DANGER**

**Risk of accident in the event of failure of the brake system!**

If the brake system fails, the truck will be insufficiently braked.

– Do **not** operate the truck if the brake system is faulty.

## Checking the electric brake

▷

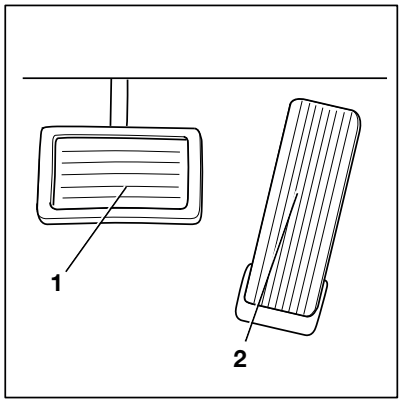


**⚠ DANGER**

**Risk of accident if the braking effect of the electric brake is inadequate!**

The braking effect of the electric brake may be insufficient for emergency braking.

– Always actuate the brake pedal (1) for emergency braking.

**⚠ DANGER**

**Risk of accident due to excessive speed!**

Depending on the charge state of the battery, regenerative braking may be insufficient when driving downhill, meaning that the maximum permissible speed of the truck is exceeded.

– Press the brake pedal (1).

If the driving speed is restricted or if the opposite drive direction is selected, the truck is braked using the electric brake.

– To actuate this, release the accelerator pedal (2).

The truck must decelerate and remain stationary.

– If the truck does not slow down, press the brake pedal (1).

## Checking the service brake

– Release the parking brake.

– Press the brake pedal (1).

There must be a slight pedal clearance and then a noticeable brake pressure point.

– Accelerate the unladen truck in a clear area.

– Press the brake pedal (1) firmly.

The truck must decelerate noticeably.

## Checking the parking brake on a gradient or a lorry ramp

**⚠ DANGER**

**Risk to life if the truck rolls away!**

If the parking brake is not applied, the truck could run people over.

– Do not leave the truck until the parking brake has been applied.

– Stop the truck on a steep gradient (e.g. a HGV ramp) and actuate the parking brake.

The parking brake must hold the truck on the incline.

– If the truck rolls away despite the parking brake being applied, stop the truck using the service brake.

– In an emergency, secure the truck with wedges on the downhill-facing side to prevent it from rolling away.

– Have the parking brake checked and repaired by the authorised service centre.

## Checking the parking brake on a level surface

**⚠ WARNING**

Risk of accident from abrupt deceleration!

The truck will decelerate abruptly if the parking brake is applied.

– Fasten the seat belt.

– Use the available restraint systems.

– Find a sufficiently large and open area in which nobody will be endangered or obstructed.

– Accelerate the truck to walking speed.

– Press the emergency off switch.

NOTE

*When the emergency off switch is actuated, note the following:*

- *The electric brake is disabled. The truck no longer responds to the command issued by the accelerator pedal.*
- *The power steering is no longer available. Steering forces are increased due to the remaining emergency steering function.*

– Release the accelerator pedal.

– Apply the parking brake.

The electric parking brake slows the truck with a low level of deceleration.

– To increase the level of deceleration, either press and hold the actuating button for longer or press it several times.

The truck must decelerate and remain stationary.

NOTE

*To release the parking brake, unlock the emergency off switch.*

– If the truck only coasts and does not decelerate or decelerates only slightly, stop the truck using the service brake.

– Secure the truck with chocks so that the truck does not roll away.

– Have the parking brake checked and repaired by the authorised service centre.

## Warming up the hydraulic oil at cold ambient temperatures

If the truck has been exposed to low ambient temperatures for an extended period, because it has been parked outside during winter, for example, the hydraulic oil has a low temperature. In order to ensure smooth and safe operation of the hydraulic functions, the hydraulic oil must be at operating temperature.

– Drive the truck for approximately 5 minutes and actuate the brake several times.

– Actuate all hydraulic lifting functions several times.

Limiting the load dynamics to load program 1 during the warm-up phase ▷

NOTE

*During the warm-up phase, the load dynamics are limited to load program 1. The adjacent symbol appears on the display until the warm-up phase is complete.*

## Checking the steering system for correct function ▷

**DANGER**

**If the hydraulics fail, there is a risk of accident as the steering characteristics have changed.**

– Do not operate the truck if it has a defective steering system.

– Operate the steering wheel (1). The steering play while stationary must not be more than two finger widths.

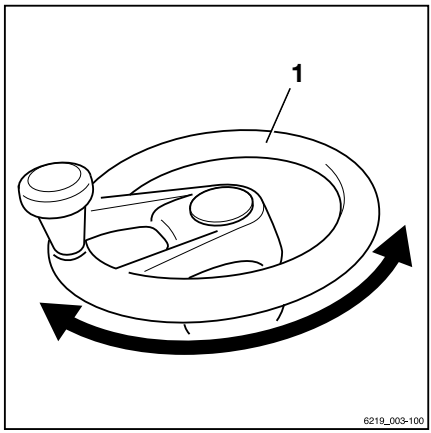

# Driver's seat

## Adjusting the MSG 65 and MSG 75 driver's seat

**⚠ WARNING**

Risk of accident from sudden adjustment of the seat or of the seat backrest!

The inadvertent adjustment of the seat or of the seat backrest can lead to uncontrolled movements by the driver. The steering or the operating devices can then be actuated unintentionally. This may cause uncontrolled movements of the truck or of the load.

– **Do not** adjust the seat or the seat backrest while the truck is in motion.
– Adjust the seat and the seat backrest so that all operating devices can be actuated safely.
– Ensure that the seat and the seat backrest are securely engaged.

**⚠ WARNING**

On some equipment variants, the amount of head clearance on the truck may be restricted.

On these specific equipment variants, the distance between the driver's head and the lower edge of the roofing sheet must be at least 40 mm.

**NOTE**

*Observe any separate operating instructions for the seat.*

**⚠ WARNING**

To obtain optimum seat cushioning, you must adjust the seat suspension to your own body weight. This course of action is better for your back and protects your health.

– To avoid injuries, keep the swivel area of the seat clear of objects.

## Moving the driver's seat

▷

- Raise the lever (1) and hold it in position.
- Push the driver's seat into the required position.
- Release the lever.
- Ensure that the driver's seat is securely engaged.

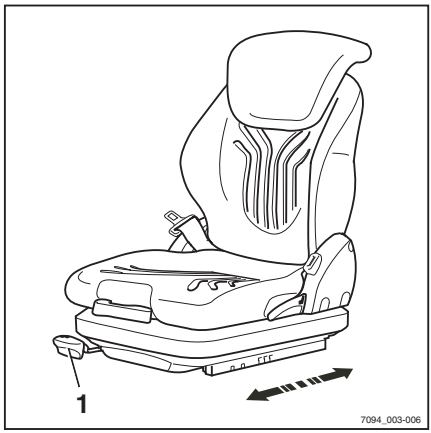


## Adjusting the seat backrest

▷

Do not apply pressure to the seat backrest when adjusting the seat backrest.

- Raise the lever (2) and hold it in position.
- Push the seat backrest into the required position.
- Release the lever.
- Ensure that the seat backrest is securely engaged.

**NOTE**

*The backwards tilt angle of the seat backrest can be restricted by the structure of the truck.*

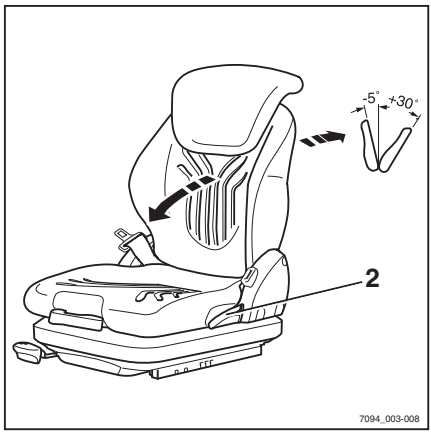

## Adjusting the MSG 65/MSG 75 seat suspension ▷

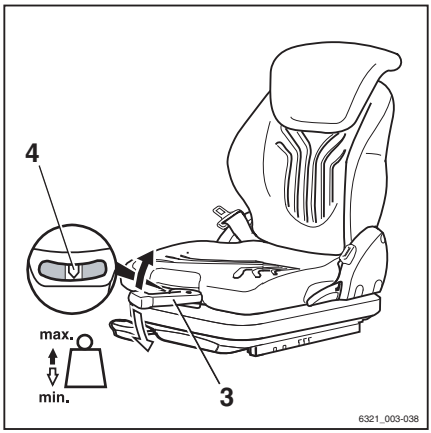


NOTE

*The MSG 65/MSG 75 driver's seat is designed for people weighing between 45 kg and 170 kg. The driver's seat can be adjusted to suit the weight of the individual driver. To obtain optimal settings for the seat suspension, the driver must perform the adjustment whilst sitting on the seat.*

NOTE

*The MSG 75 seat is equipped with electric air suspension that is activated using an electric switch instead of the lever (3).*

– Fold out the weight-adjusting lever (3).
– Pump the lever up or down to set the driver's weight.
– Return the weight-adjusting lever to the initial central position each time before raising it again (a click can be heard when this position is reached).
– Retract the weight-adjusting lever once the adjustment is complete.

NOTE

*The correct driver's weight has been selected when the arrow (4) is in the centre position in the inspection window. Once the minimum or maximum weight setting is reached, the seat will not move any further even when you pump the weight-adjusting lever.*

## Adjusting the longitudinal horizontal suspension (variant)

If the driver's seat is equipped with the "longitudinal horizontal suspension" variant, impacts in the drive direction are damped by additional seat suspension. The locking lever (5) on the left-hand side of the driver's seat activates and locks the longitudinal horizontal suspension.

– To lock the longitudinal horizontal suspension, move the locking lever (5) to the left (A).

– To activate the longitudinal horizontal suspension, move the locking lever (5) to the right (B).

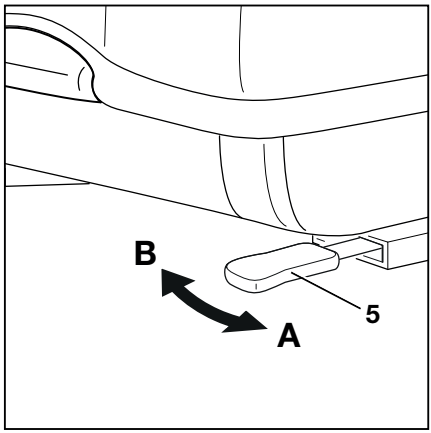


A Longitudinal horizontal suspension activated
B Longitudinal horizontal suspension blocked

NOTE

*If the longitudinal horizontal suspension is blocked, the suspension comfort is significantly lower. Impacts are much more noticeable.*

## Adjusting the lumbar support (variant)

NOTE

*The lumbar support can be adjusted to suit the contours of the individual driver's spine. Adjusting the lumbar support moves a convex support cushion into the upper or lower part of the backrest.*

– Turn the turning knob (6) up or down until the lumbar support is in the required position.

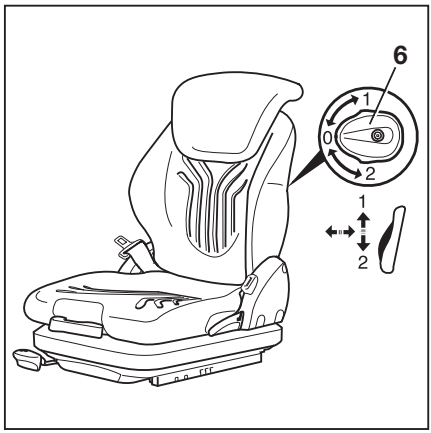

## Adjusting the backrest extension (variant)

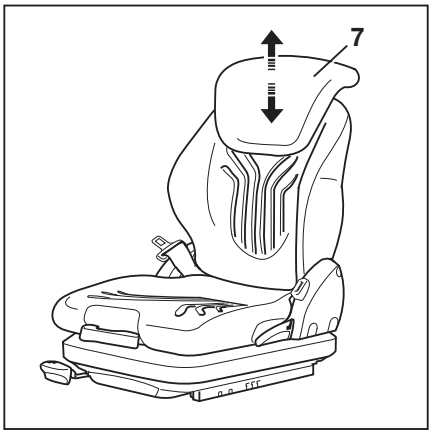


– Adjust the backrest extension (7) by pulling it out and pushing it into the desired position.

To remove the backrest extension, move it past the end stop by firmly pushing it upwards.

## Switching the seat heater (variant) on and off

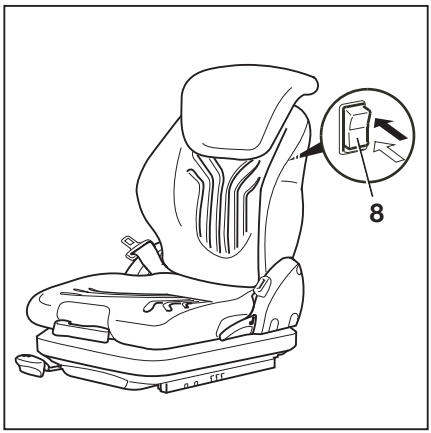


NOTE

*The seat heater only works when the driver is sitting on the driver's seat.*

– Switch the seat heater (8) on or off using the switch.

## Swivelling the driver's seat to the right for reverse travel (variant) ▷

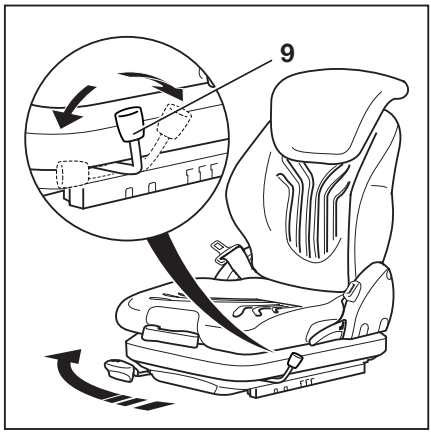


**⚠ WARNING**

Risk of accident due to the seat swivelling.

If the driver's seat swivels while the truck is in motion, the seat position is unstable.

– Swivel the driver's seat only when the truck is at a standstill.

The driver's seat can be swivelled to the right to make reverse travel easier. The optimised seat position means that it is not necessary to turn your upper body round as far. This makes it easier to look backwards.

To swivel the seat to the right for reverse travel:

– Sit on the driver's seat.
– To swivel the driver's seat, pull the lever (9) back and hold it in position.
– Swivel the driver's seat to the right until it reaches the stop.
– Move the lever (9) forwards again.
– Make sure that the driver's seat is securely engaged.

Swivelling the driver's seat to the right is intended only for reverse travel. The driver's seat must be swivelled back into place for forward travel.

To swivel the seat back for forward travel:

– To swivel the driver's seat back to its original position, pull the lever (9) back and hold it in position.
– Swivel the driver's seat to the left until it reaches the stop.
– Move the lever (9) forwards again.
– Make sure that the driver's seat is securely engaged.

# Adjusting the MSG 75 E driver's seat

**⚠ WARNING**

Risk of accident from sudden adjustment of the seat or of the seat backrest!

The inadvertent adjustment of the seat or of the seat backrest can lead to uncontrolled movements by the driver. The steering or the operating devices can then be actuated unintentionally. This may cause uncontrolled movements of the truck or of the load.

– **Do not** adjust the seat or the seat backrest while the truck is in motion.
– Adjust the seat and the seat backrest so that all operating devices can be actuated safely.
– Ensure that the seat and the seat backrest are securely engaged.

**⚠ WARNING**

On some equipment variants, the amount of head clearance on the truck may be restricted.

On these specific equipment variants, the distance between the driver's head and the lower edge of the roofing sheet must be at least 40 mm.

**NOTE**

*Observe any separate operating instructions for the seat.*

## Seat suspension

**NOTE**

*The MSG 75 E driver's seat is designed for people weighing between 50 kg and 130 kg. The driver's seat is equipped with electric air suspension, which automatically adjusts to the driver's weight.*

– Sit on the driver's seat.
– Turn the key switch to the "I" position.

The seat automatically adjusts to the driver's weight.

## Moving the driver's seat

▷

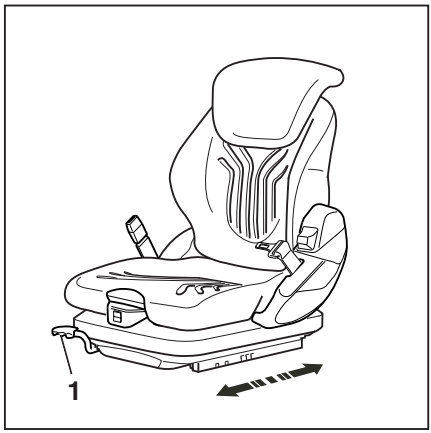


- Raise the lever (1) and hold it in position.
- Push the driver's seat into the required position.
- Release the lever.
- Ensure that the driver's seat is securely engaged.

## Adjusting the seat backrest

▷

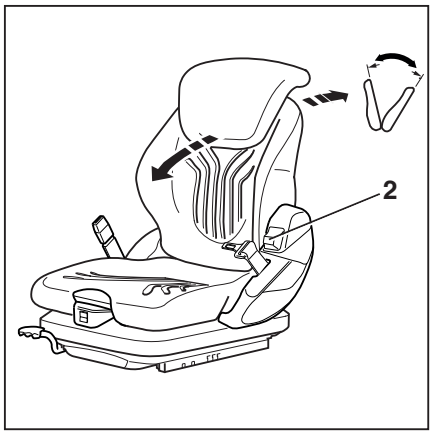


- Raise the lever (2) and hold it in position.

Do not apply pressure to the seat backrest while doing this.

- Move the seat backrest into the desired position by applying pressure or releasing pressure.
- Release the lever.
- Ensure that the seat backrest is securely engaged.

**NOTE**

*The backwards tilt angle of the seat backrest can be restricted by the structure of the truck.*

## Adjusting the backrest extension (variant) ▷

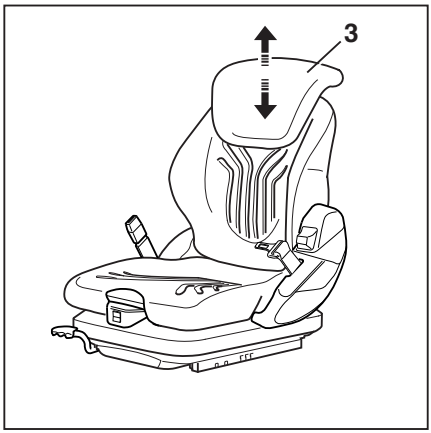


– Adjust the backrest extension (3) by pulling it out and pushing it into the desired position.

To remove the backrest extension, move it past the end stop by firmly pushing it upwards.

## Adjusting the lumbar support (variant) ▷

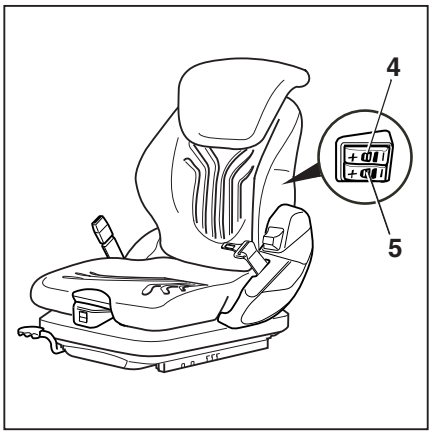


NOTE

*The lumbar support can be adjusted to suit the contours of the individual driver's spine. Adjusting the lumbar support moves a convex support cushion into the upper or lower part of the backrest.*

– To adjust the upper backrest area, actuate the push button (4) by pressing **+** or **–**.

– To adjust the lower backrest area, actuate the push button (5) by pressing **+** or **–**.

If the support cushion stops changing when **+** is pressed, the maximum support level has been reached.

## Adjusting the longitudinal horizontal suspension (variant)

If the driver's seat is equipped with the "longitudinal horizontal suspension" variant, impacts in the drive direction are damped by additional seat suspension. The locking lever (6) on the left-hand side of the driver's seat activates and locks the longitudinal horizontal suspension.

– To lock the longitudinal horizontal suspension, move the locking lever (6) to the left (A).

– To activate the longitudinal horizontal suspension, move the locking lever (6) to the right (B).

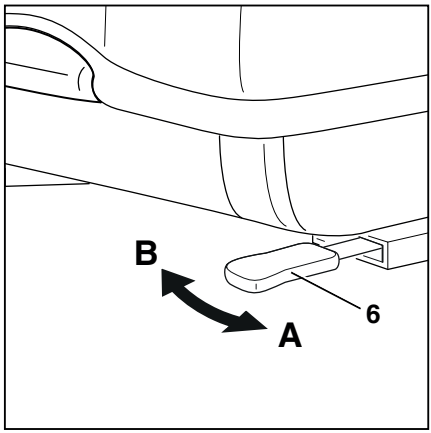


A Longitudinal horizontal suspension activated
B Longitudinal horizontal suspension blocked

NOTE

*If the longitudinal horizontal suspension is blocked, the suspension comfort is significantly lower. Impacts are much more noticeable.*

## Adjusting the seat height

The seat height can be individually adjusted. However, the seat must be under load during this process.

– Push the push button (7) to make the adjustment.

Raise: ▲

Lower: ▼

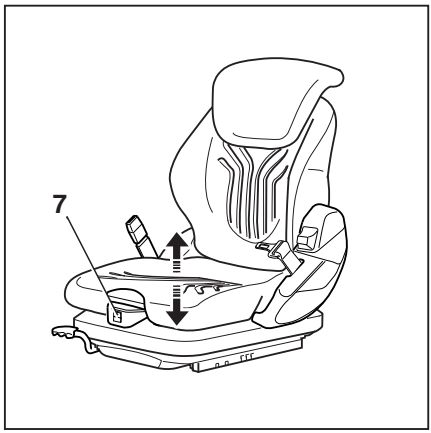

## Adjusting the seat depth

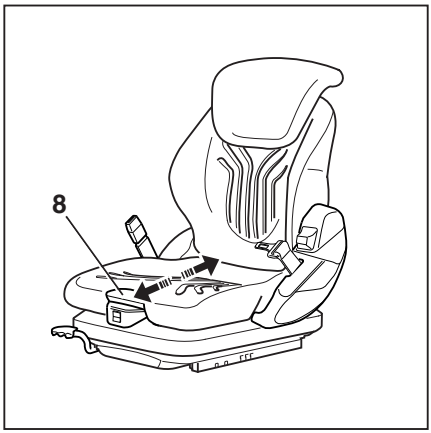


**WARNING**

Risk of crushing when adjusting!

Your fingers could enter the area between the cover and the seat frame when adjusting the seat. There is a risk of crushing.

– When adjusting the seat, **do not** reach between the cover and the seat frame.

The seat depth of the seat base can be adjusted individually.

– To adjust the seat depth, pull the handle (8) upwards.

To achieve the desired position, simultaneously slide the seat base forwards or backwards.

When adjusting the seat depth, the seat angle is automatically adjusted between 6° (rearmost position) and 12° (forwardmost position).

## Switching the seat heater (variant) on and off

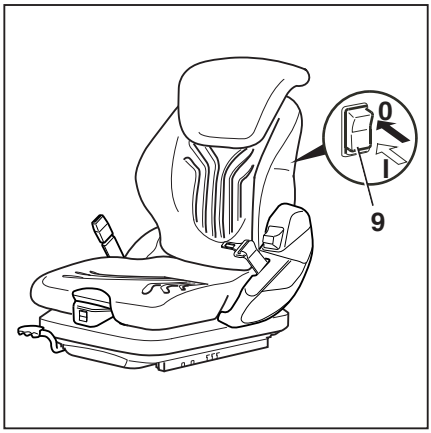


– Switch the seat heater on or off using the switch (9).

Top position "0": OFF

Bottom position "I": ON

### Switching the seat heater and seat air conditioning (variants) on and off ▷

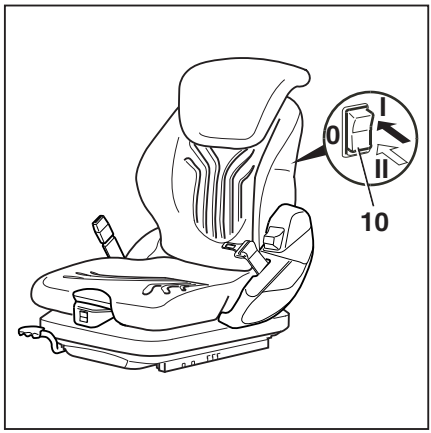


The seat air conditioning (variant) ensures that the seat surface is always dry. Moisture from the parts of the body that come into contact with the driver's seat is drawn away. This keeps the seat pleasantly cool and dry.

– Switch the seat heater and the seat air conditioning on and off using the switch (10).

Top position "I": seat heater ON (seat air conditioning OFF)

Centre position "0": seat heater and seat air conditioning OFF

Bottom position "II": seat air conditioning ON (seat heater OFF)

## Adjusting the MGS 95 driver's seat

**⚠ WARNING**

Risk of accident from sudden adjustment of the seat or of the seat backrest!

The inadvertent adjustment of the seat or of the seat backrest can lead to uncontrolled movements by the driver. The steering or the operating devices can then be actuated unintentionally. This may cause uncontrolled movements of the truck or of the load.

– **Do not** adjust the seat or the seat backrest while the truck is in motion.

– Adjust the seat and the seat backrest so that all operating devices can be actuated safely.

– Ensure that the seat and the seat backrest are securely engaged.

**⚠ WARNING**

On some equipment variants, the amount of head clearance on the truck may be restricted.

On these specific equipment variants, the distance between the driver's head and the lower edge of the roofing sheet must be at least 40 mm.

**NOTE**

*Observe any separate operating instructions for the seat.*

**⚠ WARNING**

To obtain optimum seat cushioning, you must adjust the seat suspension to your own body weight. This course of action is better for your back and protects your health.

– To avoid injuries, keep the swivel area of the seat clear of objects.

## Moving the driver's seat

▷

– Raise the lever (1) and hold it in position.
– Push the driver's seat into the required position.
– Release the lever.
– Ensure that the driver's seat is securely engaged.

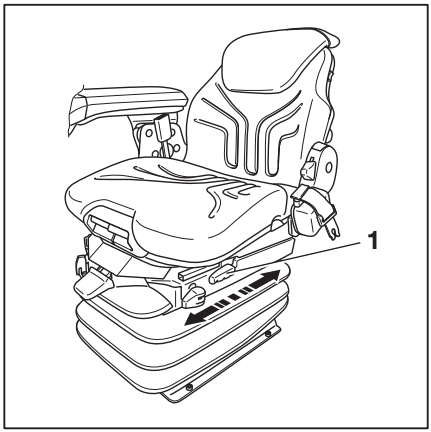


## Adjusting the seat backrest

▷

Do not apply pressure to the seat backrest when adjusting the seat backrest.

– Raise the lever (2) and hold it in position.
– Push the seat backrest into the required position.
– Release the lever.
– Ensure that the seat backrest is securely engaged.

**NOTE**

*The backwards tilt angle of the seat backrest can be restricted by the structure of the truck.*

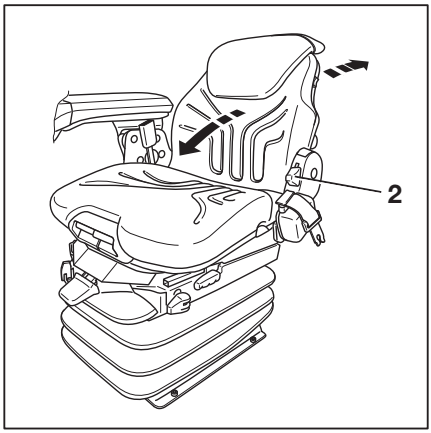

## Adjusting the damping of the seat suspension ▷

The suspension comfort can be adjusted as desired by the driver.

– Turn the adjusting lever (3) until the desired setting is reached.

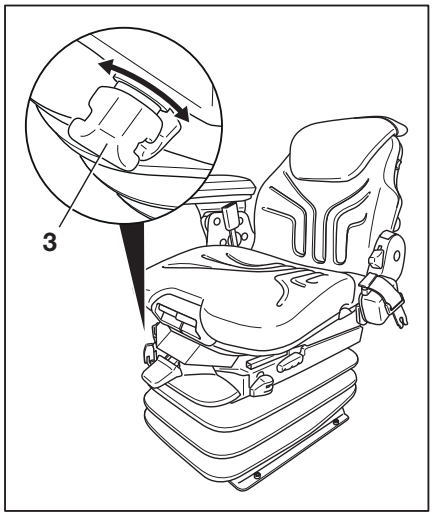


## Adjusting to the driver's weight and adjusting the seat height ▷

**NOTE**

*The individual driver's weight must be set when the truck is stationary and the driver's seat is occupied. Remain seated during this process.*

– To adjust to the driver's weight, move the pushed in lever (4) up or down until the desired setting is reached.

– To adjust the seat height, pull the lever (4) out and move it up or down until the desired setting is reached.

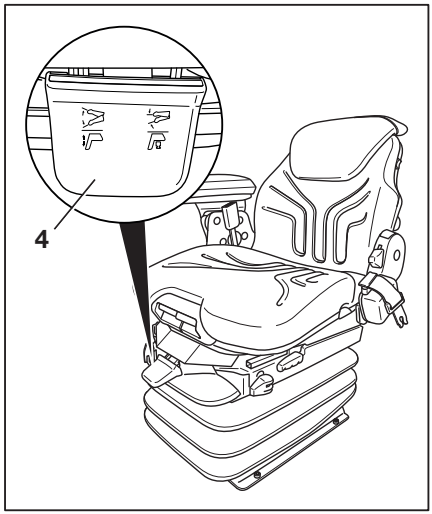

## Adjusting the longitudinal horizontal suspension ▷

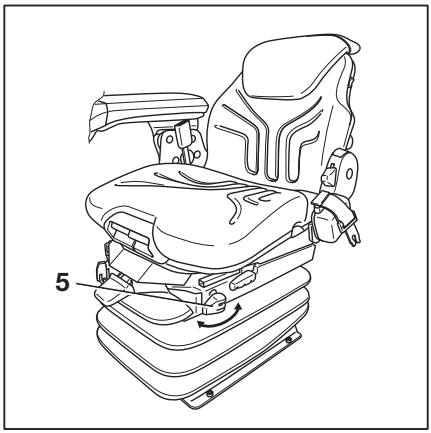


If the driver's seat is equipped with the "longitudinal horizontal suspension" variant, impacts in the drive direction are damped by additional seat suspension. The locking lever (5) on the left-hand side of the driver's seat activates and locks the longitudinal horizontal suspension.

– To activate the longitudinal horizontal suspension, move the locking lever (5) backwards.

– To lock the longitudinal horizontal suspension, move the locking lever (5) forwards.

NOTE

*If the longitudinal horizontal suspension is blocked, the suspension comfort is significantly lower. Impacts are much more noticeable.*

## Adjusting the lumbar support (variant) ▷

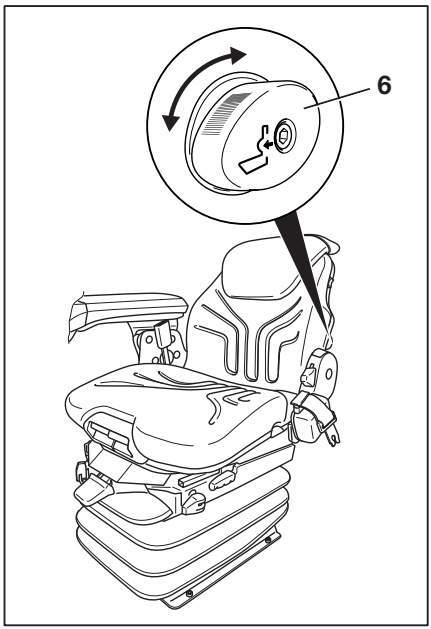


The lumbar support can be adjusted to suit the contours of the individual driver's spine. Adjusting the lumbar support moves a convex support cushion into the upper or lower part of the backrest. This increases the comfort in the sitting position and maintains the driver's performance.

– Turn the turning knob (6) until the lumbar support is in the required position.

## Adjusting the backrest extension

▷

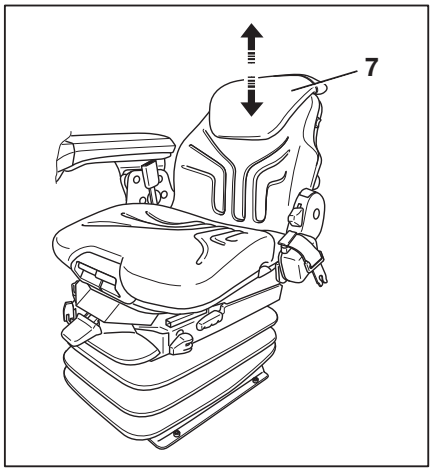


– Adjust the backrest extension (7) by pulling it out and pushing it into the desired position.

The engagement can be felt.

To remove the backrest extension, move it past the end stop by firmly pushing it upwards.

## Switching the seat heater (variant) on and off

▷

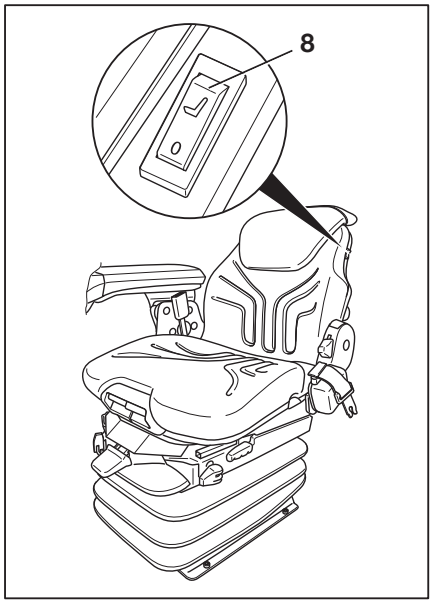


NOTE

*The seat heater only works when the driver is sitting on the driver's seat.*

– Switch the seat heater (8) on or off using the switch.

## Adjusting the seat angle

The longitudinal tilt of the seat base can be adjusted individually.

– To adjust the seat angle, pull the handle (9) upwards.

By simultaneously applying pressure to or removing pressure from the front or rear seat base, it tilts into the desired position.

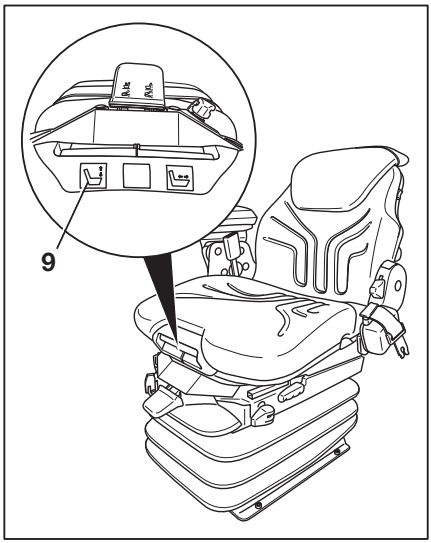


## Adjusting the seat depth

The seat depth of the seat base can be adjusted individually.

– To adjust the seat depth, pull the handle (10) upwards.

To achieve the desired position, simultaneously slide the seat base forwards or backwards.

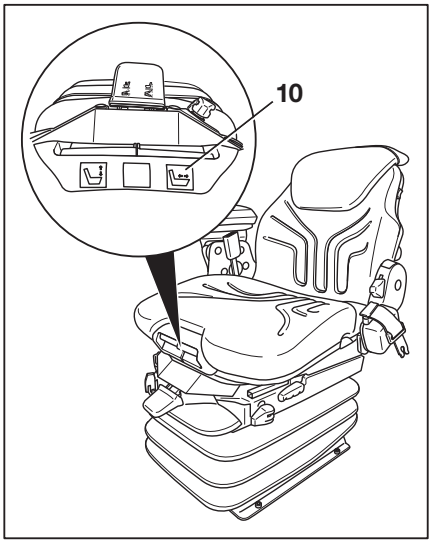

## Seat belt

**⚠ DANGER**

**Risk of injury if the truck tips over!**

Even if an approved restraint system is in use, there is still a residual risk that the driver could be injured if the truck tips over.

This risk of injury can be reduced through the combined use of the restraint system and the seat belt.

In addition, the seat belt protects against the consequences of rear-end collisions and falling off a lorry ramp.

– Recommendation: When operating the truck on a lorry ramp, fasten the seat belt in addition to using the driver's cab, the bracket door or the restraining bracket.

**⚠ DANGER**

**Only bracket doors, restraining brackets and the driver's cab (variants) with closed, fixed doors constitute driver restraint systems. Plastic doors (weather protection) do not constitute a restraint system!**

If the doors are open or have been removed, you must use an alternative suitable restraint system (e.g. a seat belt)!

### Fastening the seat belt

▷

**⚠ DANGER**

**Mortal danger when driving without wearing a seat belt!**

If the seat belt is not fastened and the truck tips over or crashes into an obstacle, the driver can be thrown out of the truck. The driver could slide under the truck or collide with an obstacle.

– Fasten the seat belt before every trip.
– Do not twist the seat belt when fastening it.
– Only use the seat belt to secure one person!
– Have any malfunctions repaired by the authorised service centre.

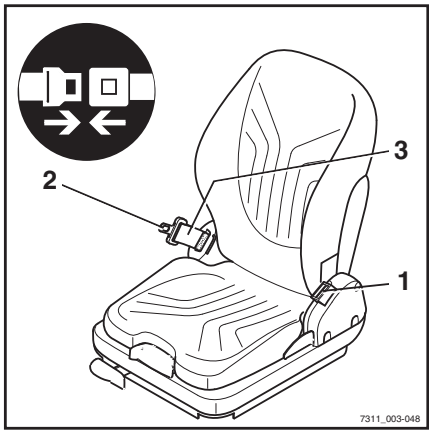

NOTE

*The buckle has a buckle switch. When the belt was not fastened, the following occurred:*

- *The message* `Close seat belt` *appears on the display-operating unit.*
- *The truck will not drive at speeds faster than 4 km/h.*
- *The hydraulic functions are blocked.*

NOTE

*One variant prevents the truck from being driven at all if the seatbelt is not fastened. The message* `Close seat belt` *appears on the display.*

– Pull the seat belt (3) smoothly out of the belt retractor and place over the thighs close to the body.

NOTE

*Sit back as far as possible so that your back is resting on the seat backrest. The automatic blocking mechanism permits sufficient freedom of movement on the seat.*

– Click the belt tongue (2) into the buckle (1).

– Check the tension of the seat belt. The belt must fit closely around your body.

## Special feature for trucks with a cab (variant)

If the truck is equipped with a cab (variant), it will have a cab door sensor. If the seat belt is not fastened and the cab door is not closed, the driving speed is limited to 4 km/h. The message `Close cab door or seat belt !` appears on the display.

NOTE

*One variant that prevents the truck from being driven at all if the cab door is open. The message* `Close cab door !` *appears in the display.*

## Special feature for trucks with HSR restraint systems (variant)

If the bracket is not closed, the message `Close restraint system` 🔓 appears in the display.

## Fastening on a steep slope

▷

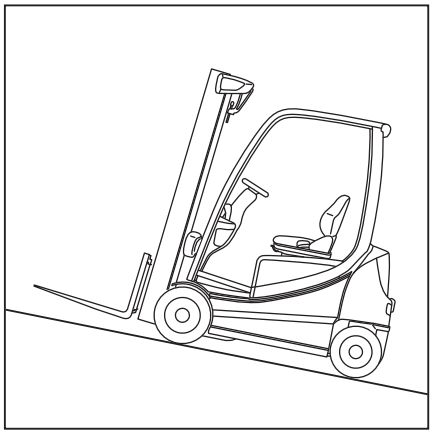

The automatic blocking mechanism prevents the belt from being extended whenever the truck is on a steep gradient. It is no longer possible to pull the seat belt out of the belt retractor.

– Move away carefully from the slope.

– Fasten the seat belt.

## Releasing the seat belt

▷

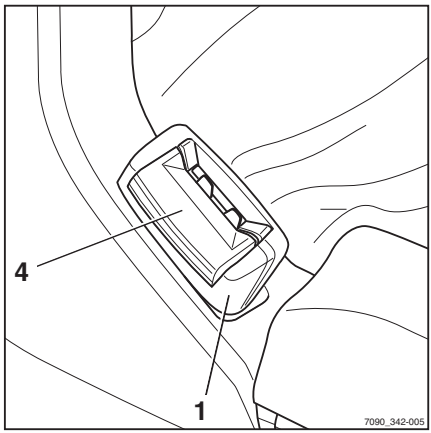


– Push the red button (4) on the buckle (1).

– Slowly guide the belt tongue back to the retractor by hand.

**NOTE**

*Slowly allow the seat belt to retract. The automatic blocking mechanism may be triggered if the belt tongue strikes the housing. It will then no longer be possible to pull the seat belt out with the usual force.*

– Using increased force, pull the seat belt around 10 to 15 mm out of the retractor to disengage the blocking mechanism.

– Slowly allow the seat belt to retract again.

– Protect the seat belt from dirt, for example, by covering it.

### Malfunction due to cold

– If the buckle or belt retractor are frozen, thaw the buckle or the belt retractor and dry the parts.

This prevents the parts from refreezing.

**⚠ CAUTION**

The seat belt may be damaged by heat!

Do not subject the buckle or belt retractor to excessive heat when thawing.

– Do not use air warmer than 60°C when thawing.

## Adjusting the armrest

**⚠ DANGER**

**There is a risk of accident if the armrest lowers suddenly, causing the driver to move in an uncontrolled manner.**

This may result in unintentional actuation of the steering or operating devices and thus cause the truck or load to move in an uncontrolled fashion.

– Do not adjust the armrest while driving.
– Adjust the armrest so that all operating devices can be actuated safely.
– Ensure that the armrest is securely tightened.

### Adjusting the length of the armrest

– Release the star-grip handle (1) by turning to the left.
– Shift the armrest (2) into the desired position.
– Tighten the star-grip handle by turning to the right.
– Check that the armrest is firmly attached.

### Adjusting the height of the armrest

– Release the hand wheel (3) by turning to the left.
– Shift the armrest (2) into the desired position.

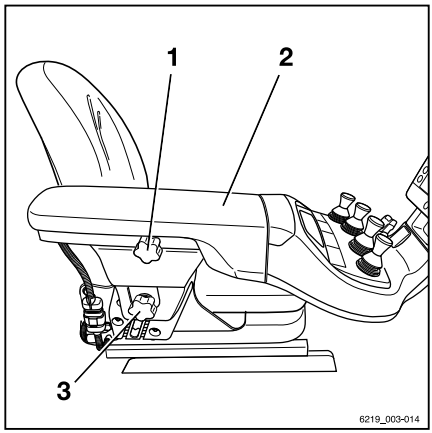

- Tighten the hand wheel by turning to the right.
- Check that the armrest is firmly attached.

# Switching on

## Switching on using the key switch

**⚠ WARNING**

All checks and tasks required before daily use must have been performed without any defects being identified before switching on the truck.

– Perform the "visual inspections and functional checks".
– **Do not** operate the truck if defects have been detected; contact the authorised service centre.

– Insert the switch key (1) into the key switch and turn it to the "I" position. ▷

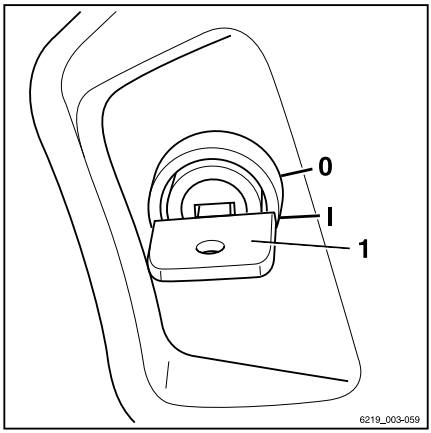


**NOTE**

*If the truck is equipped with the "Access authorisation with PIN code" variant, the display initially changes to the input menu for access authorisation.*

Once the truck is ready for operation, the main screen is shown on the display.

### Main screen ▷

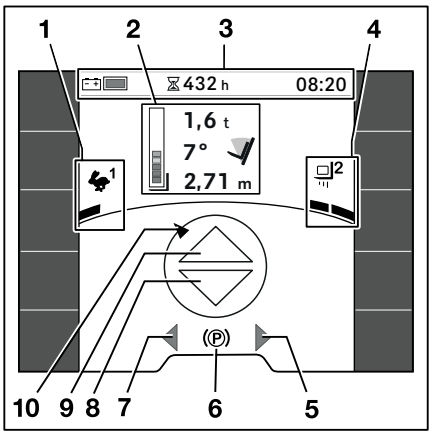


1 Selected drive programme with driving dynamics display
2 Load information (variants)
3 Status bar: battery charge, operating hours, time
4 Selected load dynamics programme with dynamics bar
5 "Right" turn indicator display
6 Driving speed or parking brake (Ⓟ)
7 "Left" turn indicator display
8 "Reverse" drive direction indicator
9 "Forward" drive direction indicator
10 Steering angle display

Additional information may appear on the display.

– Refer to the chapter entitled "Display messages".

**NOTE**

*After connecting the battery, the correct charge state may not be displayed until the battery is placed under load by driving or lifting operations.*

## Switching on via push button (variant)

**WARNING**

All checks and tasks required before daily use must have been performed without any defects being identified before switching on the truck.

– Perform the "visual inspections and functional checks".
– **Do not** operate the truck if defects have been detected; contact the authorised service centre.

The "Switch on via push button" variant is available only in conjunction with the "FleetManager" or "Access authorisation with PIN code" variants. In place of the key switch, the truck has a push button (1) that is used to switch the truck on and off.

– To switch on the truck, press the push button (1) or sit on the driver's seat. A message on the display/operating unit asks the operator to place the FleetManager card in position or to enter the PIN code.

Authorisation via the "FleetManager" card or the PIN code must take place within a specified period of time:

- Within 30 seconds if the driver's seat is not occupied
- Within 60 seconds if the driver's seat is occupied

If this does not happen, the truck switches off again.

– To switch on the truck, press the push button (1) or sit in the driver's seat.

If authorisation was successful, the truck is ready for operation. The main view is shown on the display.

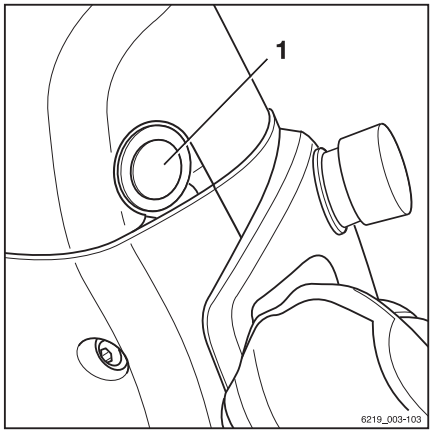

– To switch off the truck, press the push button (1) and hold for 1 second.

NOTE

*For the variant with*

- *"Access authorisation with PIN code", see the relevant section.*
- *"FleetManager", see the "original operating instructions for FleetManager".*

# Display-operating unit

## Operating the display-operating unit

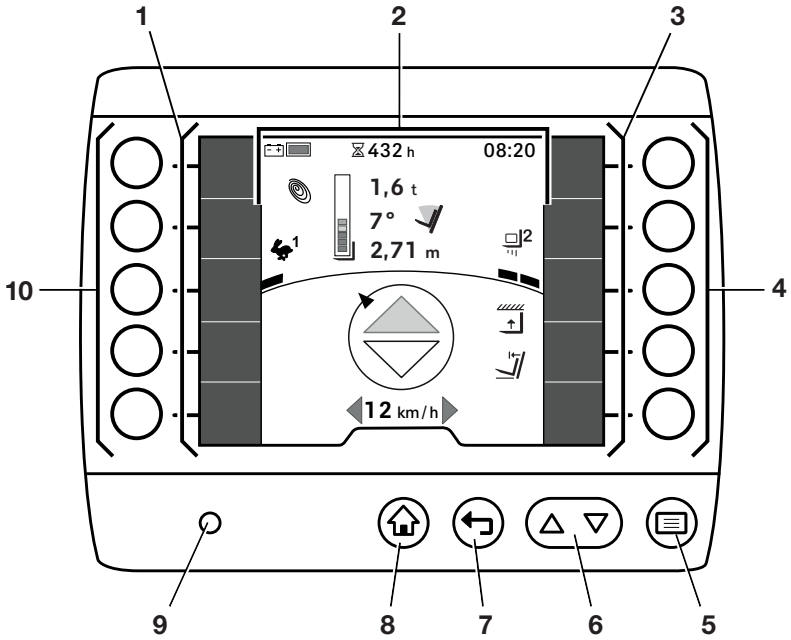


The display-operating unit is operated using the control and enter keys (5...8) and the soft-keys (4, 10). The display (2) shows information about the current driving programme, load programme and the configuration of the favourites bars (1, 3). The brightness sensor (9) automatically adjusts the brightness of the display based on the truck's surroundings.

**Functions of the control and enter keys**

| Designation | Position | Functions |
|---|---|---|
| Softkeys | 4, 10 | The softkeys correspond to the adjacent functions or input options.<br>If functions have been stored in the favourites bars (1, 3), these functions can be switched on and off by pressing the adjacent softkey.<br>In addition to switching functions on and off, the soft keys on the right (3) navigate through the menu structure. These soft keys are also used to select actions. |
| Menu button ☰ | 5 | The menu button ☰ opens the first level of the menu.<br>If a deeper navigation level is currently selected, this button takes you back to the first menu level.<br>When using the settings menus, the menu button ☰ saves input. |
| Scrolling buttons △ ▽ | 6 | The scrolling buttons △ ▽ allow you to scroll up and down menu items within a menu level.<br>This button △ clears input entered in the settings menus.<br>This button ▽ switches between upper case and lower case for alphanumeric entries. |
| Back button ↩ | 7 | When the back button ↩ is pressed, the display switches to the next menu level up.<br>This button cancels input entered in the settings menus. |
| Main display button ⌂ | 8 | Pressing the main display button ⌂ at any menu level takes you directly back to the main display. |

## Alternative position of the display-operating unit (variant)

With this variant, the display-operating unit is positioned on a cross beam approximately in the centre of the truck. This creates space for mounting additional devices or monitors on the right-hand A-pillar of the driver's cab.

When mounting such additional devices, note that a specific field of vision is required for the driver. This is important for ensuring that the driver can operate the truck in a way that is safe for the driver and for others. Depending on the truck equipment, this field of vision could be restricted. The field of vision will depend, for example, on the width of the lift mast used or the extent to which additional devices enter the driver's field of vision. The operating company must ensure that the additional devices are mounted in such a way that the driver has an adequate field of vision.

## Required field of vision

The illustrations below provide an overview of the requirements for the dimensions and the position of the additional devices or monitors in order to ensure an adequate field of vision.

1 Maximum height of devices or monitors.
2 Minimum distance between the undersides of the devices or monitors.
3 Maximum depth of the devices or monitors.

Maximum height (1) and minimum distance (2) ▷

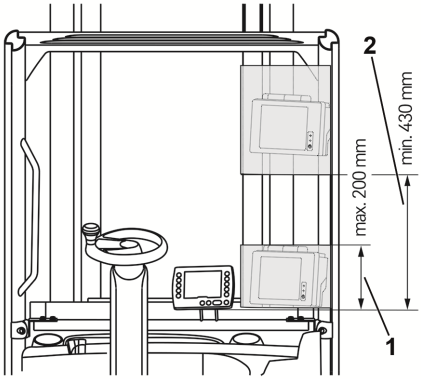


Maximum depth (3) ▷

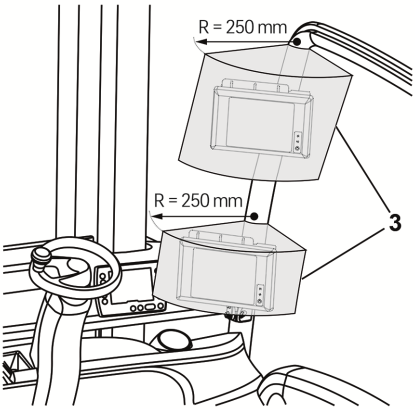

## Access authorisation with PIN code (variant)

Trucks equipped with the "Access authorisation with PIN code" variant are protected against unauthorised use by a PIN code. So that the same truck can be used by different drivers, individual PIN codes can be specified.

An initial PIN code of "11111" is preset at the factory for the first use.

**NOTE**

*We recommend that the fleet manager changes this PIN code using their access authorisation. See also the section entitled "Access authorisation for the fleet manager (variant)".*

When the key switch is switched on, the `Access authorisation` input menu appears. ▷

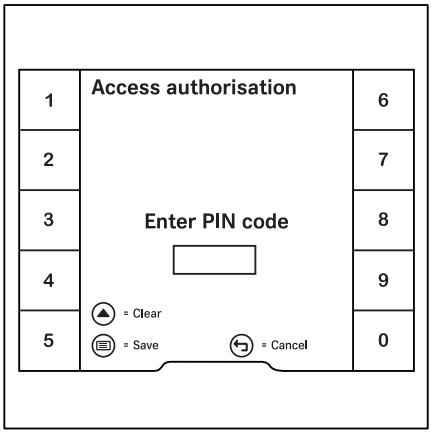


All hydraulic functions and drive functions of the truck are blocked. In the StVZO (German Road Traffic Licensing Regulations) variant, the function of the hazard warning system (variant) is guaranteed.

– To activate the blocked functions, use the softkeys to enter the PIN code.

– To confirm, push the ☰ button.

If the input was correct, the display changes to the main display. The truck is ready for use.

– If the input was incorrect, enter the PIN code again.

**NOTE**

*The authorised service centre can configure access authorisation so that the PIN code has to be re-entered each time after someone leaves the truck.*

When the driver's seat is occupied again, the message `Log in` 🔒 appears. The display then changes to the "Access authorisation" input menu.

### Changing the PIN codes

The fleet manager can change the PIN codes. See also the following section entitled "Access authorisation for the fleet manager (variant)".

– Activate the "Access authorisation for the fleet manager".

– Press the `Service` softkey. ▷

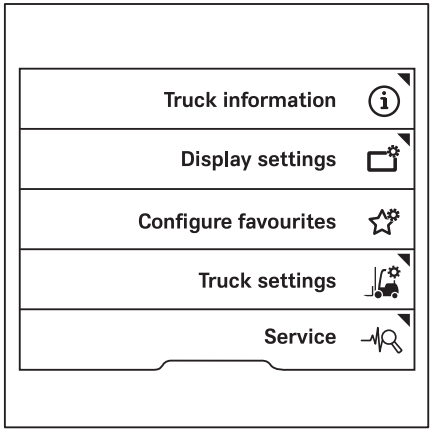


– Press the scroll keys △ ▽ until the `Change PIN codes` menu appears.

– Press the `Change PIN codes` softkey. ▷

– Follow the instructions on the display.

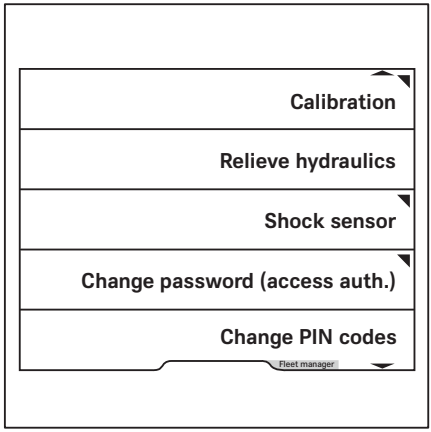


## Access authorisation for the fleet manager (variant)

Trucks equipped with the "Access authorisation for the fleet manager" variant can be configured by the users themselves. Access to

these settings is protected by a fleet manager password.

Three options are available for the "Access authorisation for the fleet manager" variant:

1 **No fleet manager password**
   Access to the configuration menus is not enabled. If access is required at a later date, the authorised service centre must set up a fleet manager password.
2 **Standard fleet manager password**
   The standard fleet manager password is "1111".
   For safety reasons, this standard fleet manager password must be changed after the first use. See also the section entitled "Changing the fleet manager password".
3 **Individual fleet manager password**
   The individual fleet manager password is noted on the order confirmation and on the truck invoice.

NOTE

*Access to the settings menu is only available if the truck is at a standstill and the parking brake is applied. If the parking brake is released prematurely, the settings menu will close.*

– Stop the truck.

– Apply the parking brake.

– Press the button.

– Press the softkey.

The first menu level appears.

– Press the `Access authorisation` softkey 🔑.

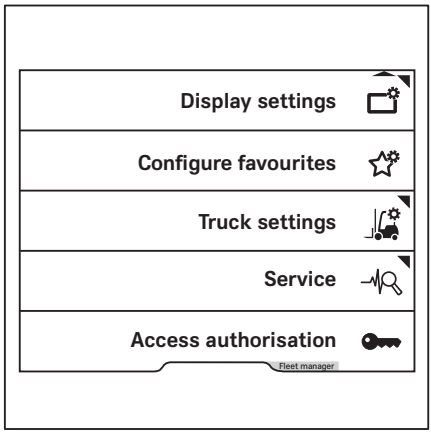


The display changes to the `Access authorisation` menu.

– Enter the fleet manager password using the softkeys.

– To confirm, press the ☰ button.

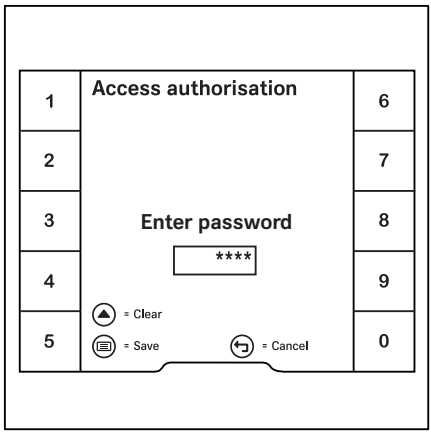

The message `Fleet manager access authorisation granted` ✓ appears. ▷

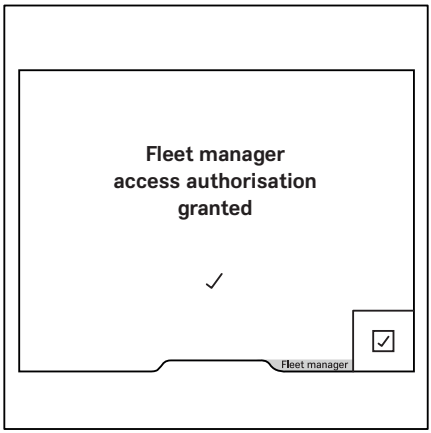


– To confirm, press the ✓ softkey.

The display returns to the settings menu.

If the password entered was incorrect, the message `Password incorrect` is displayed.

– If this happens, enter the password again.

**NOTE**

*While the "Access authorisation for the fleet manager" is activated,* `Fleet manager` *is displayed in an orange bar at the bottom of the screen. When the users switches to the main display, the access authorisation expires again.*

## Changing the fleet manager password

– Activate the "Access authorisation for the fleet manager".

– Press the `Service` softkey. ▷

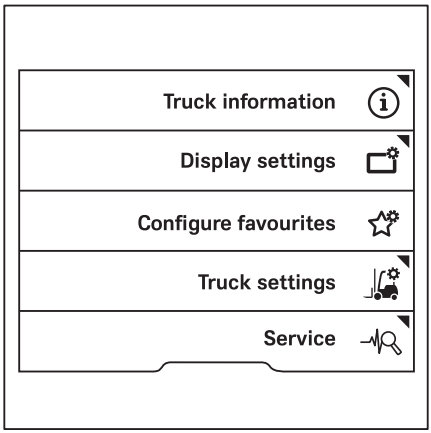

– Press the scroll buttons △ ▽ until the `Change password (access auth.)` menu appears.
– Press the `Change password (access auth.)` softkey.
– Follow the instructions on the display.

▷

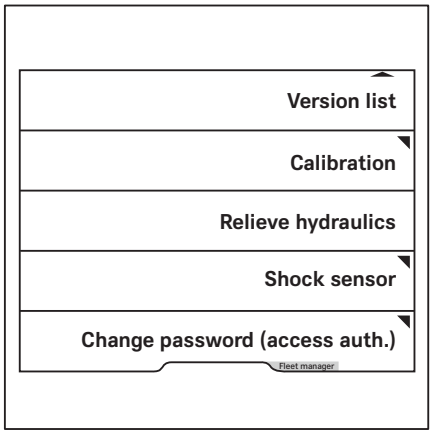

# Pre-Shift Check

## Description of the Pre-Shift Check (variant)

The Pre-Shift Check is a guided dialogue in the display-operating unit. It also helps the driver conduct the necessary "visual inspections and function checking" before everyday use. After the truck has been switched on, the driver must answer questions about the condition of the forklift truck with `Yes` or `No`.

While the driver is doing this, the truck functions are available with restrictions. The driving speed and hydraulic functions are restricted.

To commission the truck, the authorised service centre can compile the Pre-Shift Check from a question catalogue in consultation with the fleet manager. If a question catalogue has not been compiled, the only question stored by default is `Truck ready for operation?`

If the question is answered with "No", an entry is made in the history. No restrictions in truck function for this scenario are stored by default. The authorised service centre can replace this question with a question from the question catalogue.

In addition, the fleet manager has the following options:

- The fleet manager can view the results of all checks via the `History`.
- The fleet manager can define the shift start for three different shifts. The Pre-Shift Check must be performed when these shifts start.

  If the truck is equipped with "FleetManager", the shifts are defined on the FleetManager interface. See the relevant operating instructions.
- If, due to a negative test result, truck functions are restricted, the fleet manager can reset these restrictions.
- The fleet manager can specify the question sequence.

## Process

– Switch the truck on.

The question `Truck ready for operation?` appears by default. This question is not associated with any restrictions on the truck functions. The authorised service centre can replace this question with a question from the question catalogue.

The next question appears.

Some of the questions require a functional test, such as the functional test of the lighting. ▷

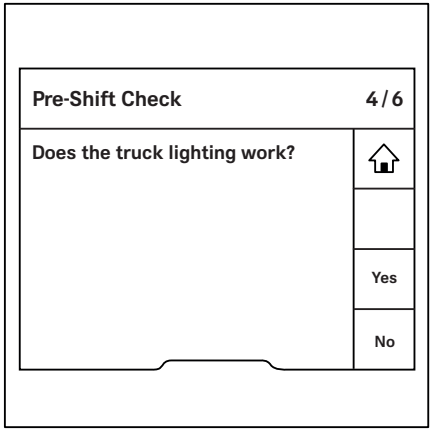


**NOTE**

*The main display symbol ⌂ appears only when it is required for the test.*

– To access the main display, press the main display button ⌂ or the softkey ⌂.

The main display contains the message `To complete Pre-Shift Check, press` ↩.

This means that the Pre-Shift Check is still active and the truck functions are restricted.

– To acknowledge the message, press the ☑ softkey.

– Switch on and check the function to be tested, e.g. lighting.

– Press the back button ↩ to go back to the Pre-Shift Check. ▷

– Answer the question based on the result of the function check.

The next question appears.

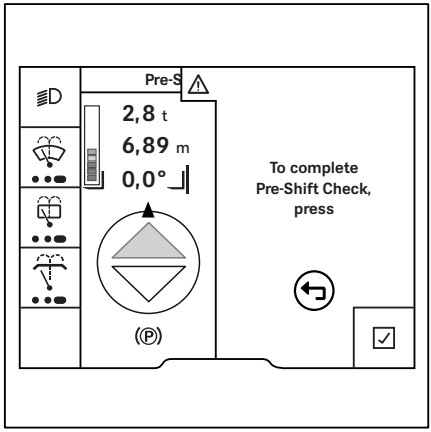


**NOTE**

*If no questions regarding the Pre-Shift Check have been compiled, the question* `Truck ready for operation?` *is displayed..*

If the truck has to be moved for a test, e.g. for a brake test, the parking brake can easily be released. The message `To complete Pre-Shift Check, press` ↩ is displayed. The truck can be moved at reduced

speed. When the parking brake is applied again, the view returns to Pre-Shift Check.

At the end of the check, truck functions are restricted if they have been adjusted as a reaction to a negative test result. The message `Pre-Shift Check truck restrictions active` shows that truck functions are restricted. As long as the truck functions are restricted, no further Pre-Shift Check is requested at the start of a new shift. The check is only requested again after the fleet manager has reset the restrictions.

## All questions

NOTE

*This question catalogue contains questions about different types of industrial trucks. It may therefore also contain questions that are not applicable to your industrial truck.*

The authorised service centre can use this question catalogue to put together the Pre-Shift Check during commissioning:

| |
|---|
| Are the fork arms damaged (e.g. bent or cracked)? |
| Are the fork arms securely mounted and the locking devices undamaged? |
| Are the roller tracks on the lift mast and lift chassis sufficiently greased? |
| Are the load chains damaged? |
| Are the load chains sufficiently tensioned and loaded equally.? |
| Are all attachments securely mounted and undamaged? Are they in working order? |
| Are operating fluids (e.g. oil, water, fuel) visibly leaking? |
| Are the wheels damaged? Are they worn beyond permissible limits? |
| Is the tyre pressure correct? |
| Is the overhead guard visibly damaged? |
| Is the entry area or footwell dirty or slippery? |
| Are the windows clean, free of ice and undamaged? |
| Are the maintenance lids securely closed? |
| Is the battery door/hood undamaged and securely closed? |
| Is the battery lock present, undamaged and closed? |
| Is the battery connection assembly dirty or damaged (e.g. housing deformed, contacts corroded)? |
| Is the towing device damaged? |

| |
|---|
| Is the capacity rating plate present, undamaged, and legible? |
| Is the driver restraint system damaged? |
| Does the horn work? |
| Does the truck lighting work? |
| Do the warning lights work? |
| Is the antistatic belt present and does it have sufficient contact with the floor? |
| Is the corona electrode present and clean? |
| Does the parking brake work properly? |
| Does the service brake work properly? |
| Does the steering work properly? |
| Does the emergency off work? |
| Is the battery dirty or obviously damaged? |
| Are all decal information and adhesive labels present and legible? |
| Is the load backrest undamaged? |
| Does the accelerator pedal work properly? |
| Is the engine compartment dirty or does it contain foreign objects? |
| Are the lift mast or the fork carriage obviously damaged? |
| Do the working hydraulics work properly according to the labelling? |
| Are the mirrors dirty or damaged? |
| Is the gas tank or its mounting obviously damaged? |
| Can unusual noises be heard when the industrial truck is used? |
| Is there any other obvious damage to the truck? |
| Does the washer system work? |
| Is the bonnet undamaged and securely closed? |

If no Pre-Shift Check questions have been compiled, the initial configuration as at the time of delivery appears.

## Defining the question sequence

The questions for the Pre-Shift Check can be defined in a random sequence or in a fixed sequence.

The random sequence is advisable, because the questions are then read more consciously by the driver. This means that there is no routine aspect.

– Activate the "Access authorisation for the fleet manager".

– Press the `Service` softkey. ▷

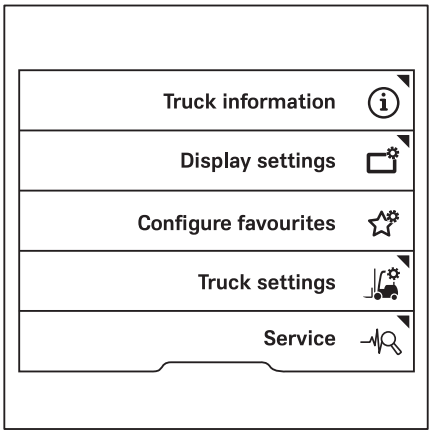


– Press the scroll keys △ ▽ until the `Pre-Shift Check` menu appears. ▷
– Press the `Pre-Shift Check` softkey.

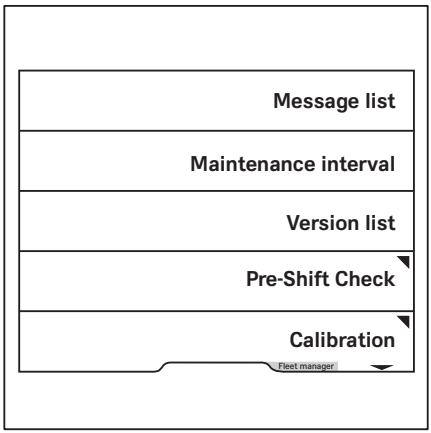

The `Pre-Shift Check` menu appears. ▷

– Press the `Question sequence` softkey.

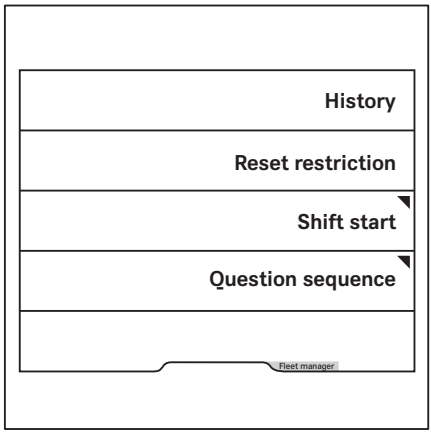


Pressing the softkey allows fixed or random question sequences to be selected. ▷

The orange activation bar displays the current selection.

– To access the main display, press the main display button ⌂.

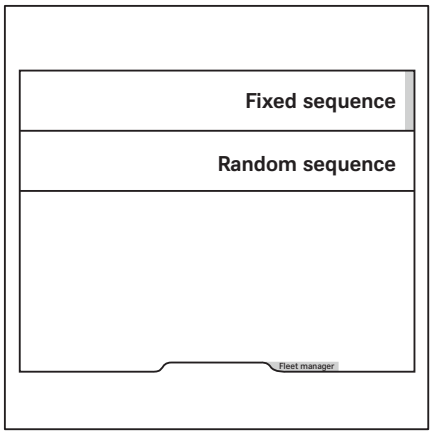


## Displaying the history

The fleet manager can display a Pre-Shift Check history.

– Activate the "Access authorisation for the fleet manager".

– Press the `Service` softkey. ▷

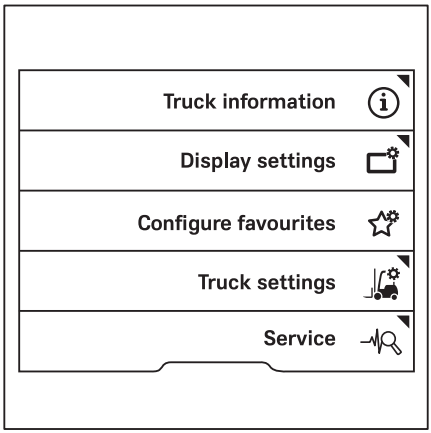


– Press the scroll keys △ ▽ until the `Pre-Shift Check` menu appears. ▷
– Press the `Pre-Shift Check` softkey.

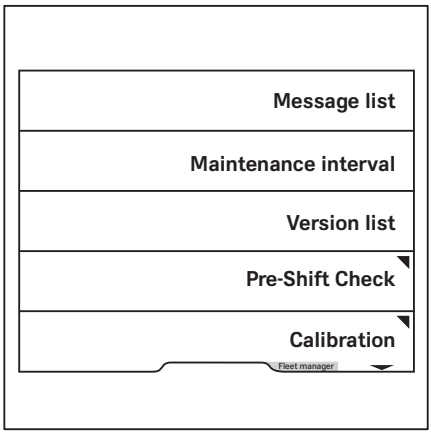

The `Pre-Shift Check` menu appears. ▷

– Press the `History` softkey.

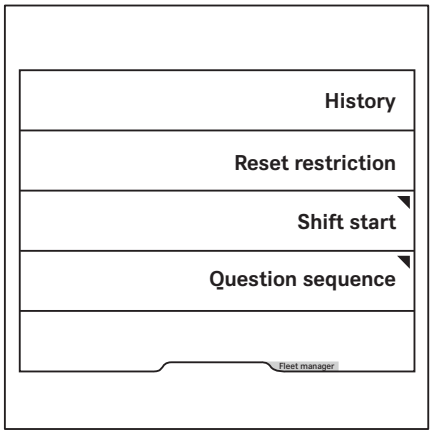


The Pre-Shift Check `results` display opens. ▷

This display shows all checks and questions that have been answered with the date and time.

To see more results, press the scroll buttons △ ▽.

– To go back to the previous menu, press the ☑ softkey.

– To access the main display, press the main display button ⌂.

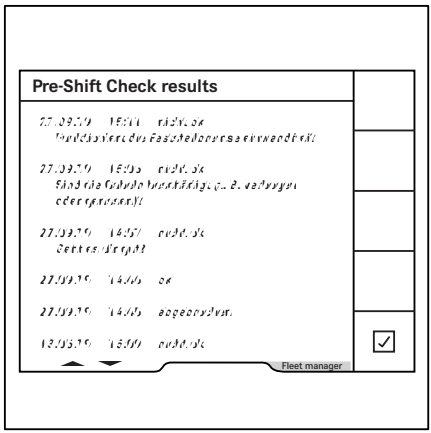


## Defining the shift start

As a standard setting after commissioning, the Pre-Shift Check is always requested 24 hours after the last check was performed. The fleet manager can define up to three shifts and their start times. The Pre-Shift Check is then always requested at this time.

NOTE

*If the truck is equipped with the "FleetManager" variant, the shifts are defined on the Fleet-Manager interface. See the relevant operating instructions.*

– Activate the "Access authorisation for the fleet manager".

– Press the `Service` softkey. ▷

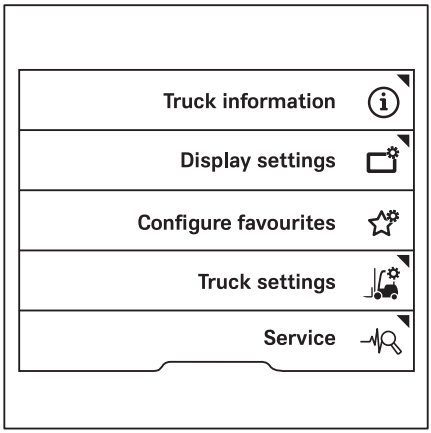


– Press the scroll keys △ ▽ until the `Pre-Shift Check` menu appears. ▷

– Press the `Pre-Shift Check` softkey.

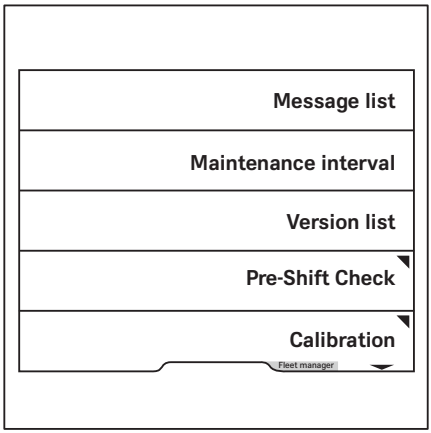

The `Pre-Shift Check` menu appears. ▷

– Press the `Shift start` softkey.

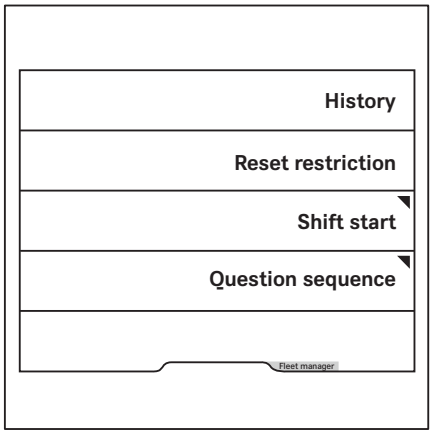


In this menu, you can call up the shift to be defined and its start time. ▷

The orange activation bar indicates which shifts are activated.

– To edit a shift, press the corresponding soft-key.

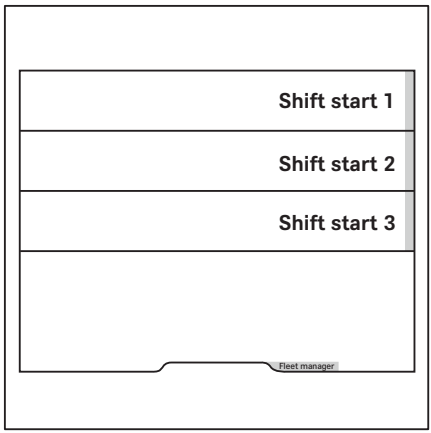

## Pre-Shift Check

In this menu you can define the shift start. ▷

– Enter the time using softkeys `0 to 9`.

– To `save`, press the button.

The shift start is now defined. The Pre-Shift Check is always requested from this shift start time.

The display reverts to the previous menu.

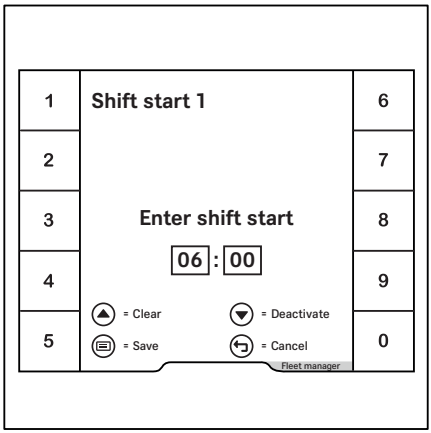


– To deactivate a certain shift start, select the relevant shift. ▷

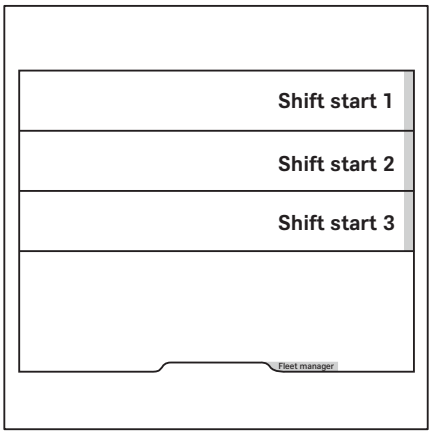

– Press the ▽ scroll button to deactivate the shift.

– To confirm, press the ☰ button.

The time is shown in grey.

The shift is deactivated. The display reverts to the previous menu. There is no activation bar next to this shift.

– To `cancel`, press the back button ↩.

– To access the main display, press the main display button ⌂.

▷

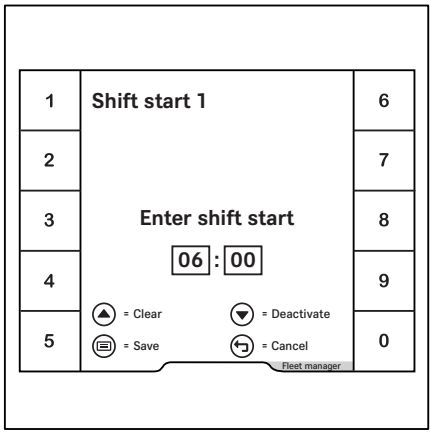


## Resetting the truck restrictions

If truck functions are restricted due to checks with a bad result, the fleet manager can reset these restrictions. The fleet manager can also do this if a previously detected problem has been rectified.

– Activate the "Access authorisation for the fleet manager".

– Press the `Service` softkey.

▷

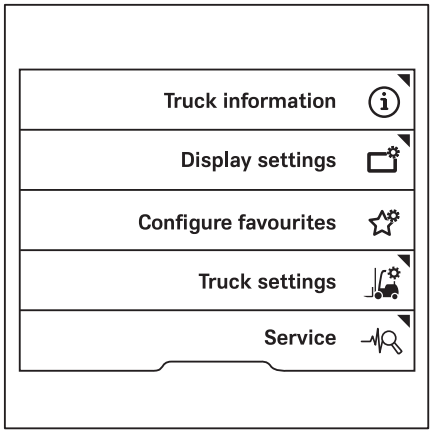

– Press the scroll keys △ ▽ until the `Pre-Shift Check` menu appears. ▷

– Press the `Pre-Shift Check` softkey.

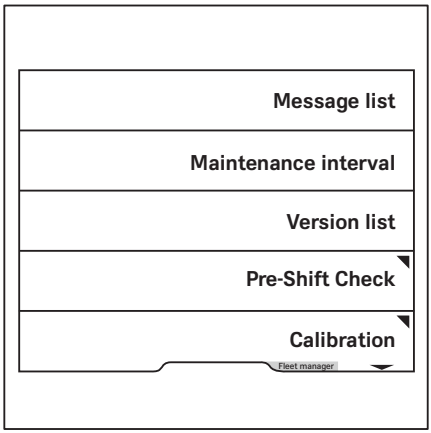


The `Pre-Shift Check` menu appears. ▷

– Press the `Reset restriction` softkey.

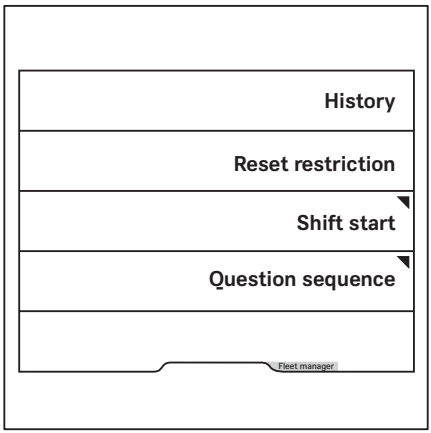

A question pops up asking if you want to reset the truck restrictions. ▷

– To confirm, press the ☑ softkey.

The full scope of the truck functions is now available. The display reverts to the previous menu.

– To cancel, press the ☒ softkey.

The truck functions remain restricted. The display reverts to the previous menu.

– To access the main display, press the main display button ⌂.

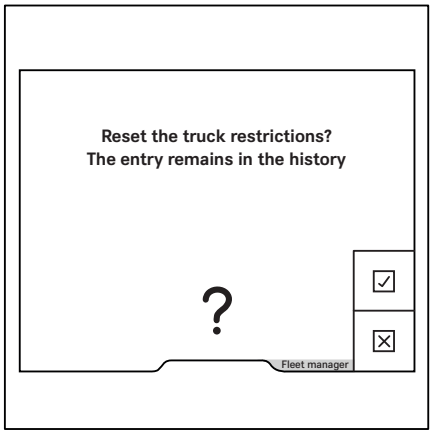

# Driver profiles

## Driver profiles (variant)

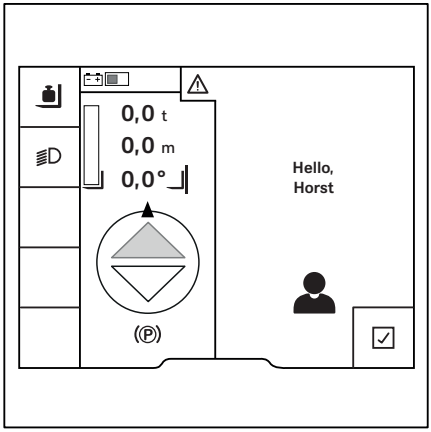


This variant allows up to ten individual driver profiles to be created. The driver is greeted with the selected name after logging in. Once the ✓ softkey is pressed, the main display appears.

If the truck is equipped with the "Access authorisation with PIN code" or "FleetManager" variants, these driver profiles can be linked to the relevant variant.

The driver profile allows the following settings to be saved:

- Language
- Favourites
- Configuration of the status line
- Configuration of drive programmes A and B

In addition, the operating statuses saved for the last selected driver profile are called up again the next time a user logs in with this driver profile:

- Selected drive programme 1 to 3
- Load dynamics
- Efficiency and drive modes (Blue-Q/sprint mode)

If a driver without an existing driver profile logs in using the "Access authorisation with PIN code" or "FleetManager" variants, a driver profile is generated. This driver profile corresponds to the settings when the truck was delivered.

If the truck is not equipped with these variants, drivers must select their profiles manually.

Any changes that drivers make to the settings while they are logged in are saved. These will then be available the next time that the driver logs in.

## Selecting driver profiles

If the truck is equipped with the "Access authorisation with PIN code" or "FleetManager" variants, the corresponding driver profile is active after logging in. If the truck is not equip-

ped with these variants, drivers must select their profiles manually.

**NOTE**

*Access to the settings menu is only available if the truck is at a standstill and the parking brake is applied. If the parking brake is released prematurely, the settings menu will close.*

– Stop the truck.

– Apply the parking brake.

– Press the button.

– Press the softkey.

– Press the `Driver profiles` softkey .

▷

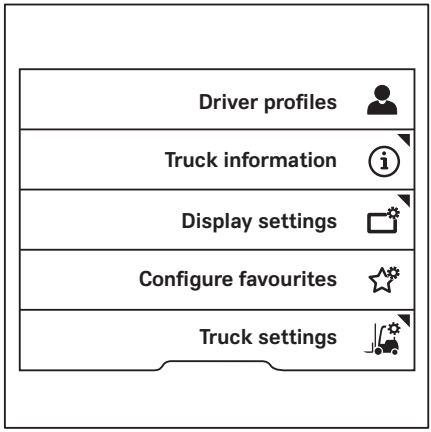

The orange activation bar displays the current selection.

– Press the softkey for the required driver profile.

The driver profile is active. The driver is greeted with the selected name the next time that the truck is switched on.

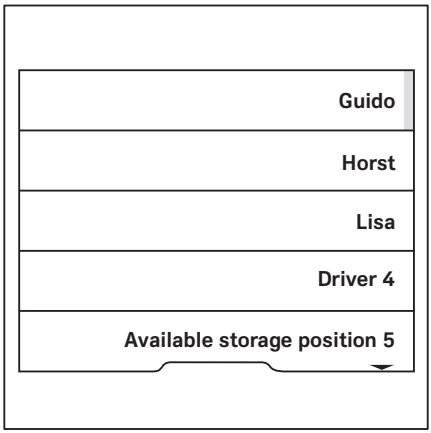


## Creating driver profiles

Both the fleet manager and the driver can create up to ten driver profiles.

NOTE

*If the truck is equipped with the "Access authorisation with PIN code" or "FleetManager" variants, the driver profile is generated automatically when logging in for the first time.*

– Apply the parking brake.

– Press the button.

– Press the softkey.

– Press the `Driver profiles` softkey .

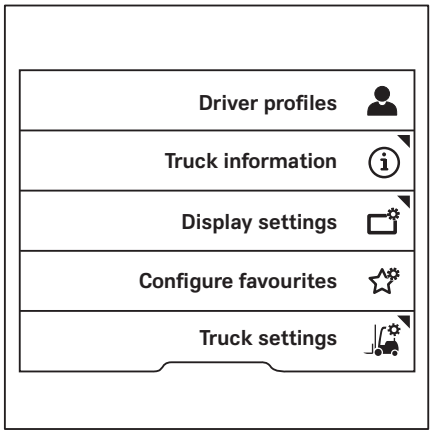


This menu provides storage space for saving ten driver profiles.

– Press the softkey for the required storage location.

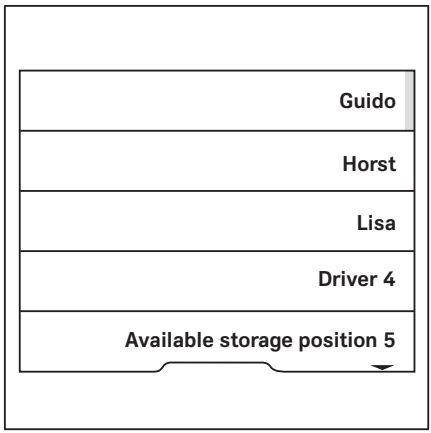


**NOTE**

*Unoccupied storage locations that do not contain a driver profile are indicated by* `Available storage position`.

The `Driver name` menu is displayed. ▷

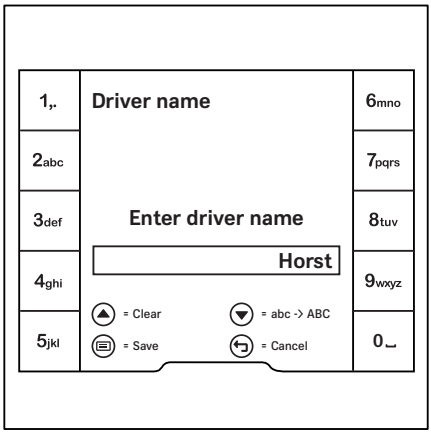


– Use the softkeys to enter the desired name.

– To confirm, press the ☰ button.

The driver profile is active. The driver is greeted with the selected name after the next log-in.

Any changes that drivers make to the settings while they are logged in are saved. These will then be available the next time that the driver logs in.

## Renaming driver profiles

Driver profiles can be renamed. Drivers can only rename their own driver profile. The fleet manager has access authorisation to rename all driver profiles.

### Renaming by the driver

– Apply the parking brake.

– Press the ☰ button.

– Press the ⚙ softkey.

– Press the `Truck settings` softkey.

– Press the `Rename driver profiles` ▷ softkey.

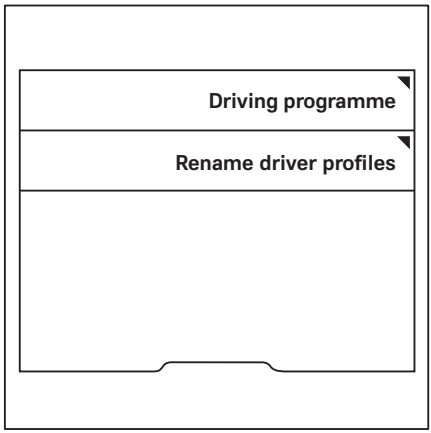


The `Driver name` menu is displayed. ▷

– Use the softkeys to enter the desired name.

– To confirm, press the ☰ button.

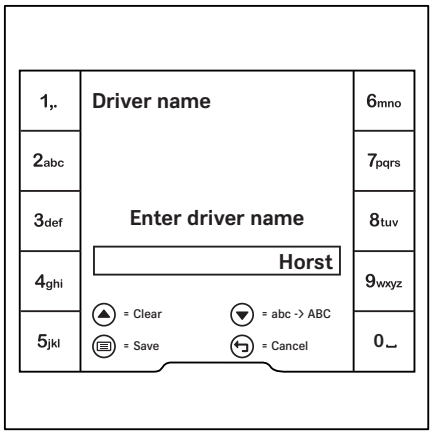


## Renaming by the fleet manager

– Activate the "Access authorisation for the fleet manager".

– Press the `Truck settings` softkey.

– Press the `Manage driver profiles` softkey. ▷

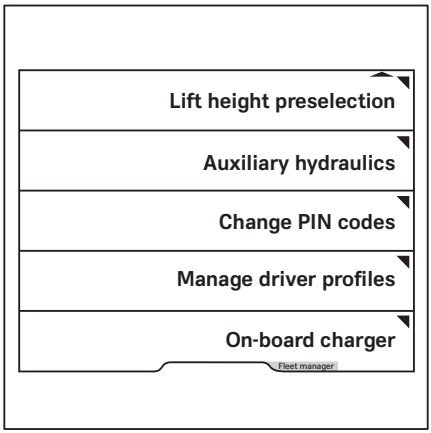


– Press the `Rename driver profiles` softkey. ▷

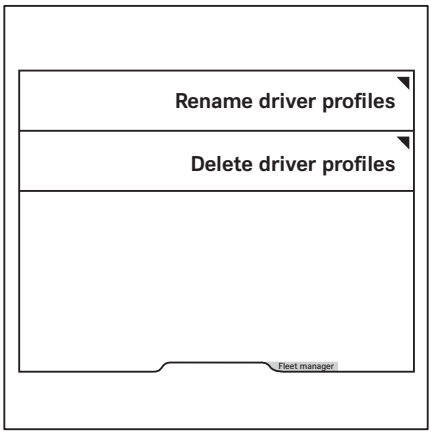

The `Driver name` menu is displayed. ▷

– Use the softkeys to enter the desired name.

– To confirm, press the ☰ button.

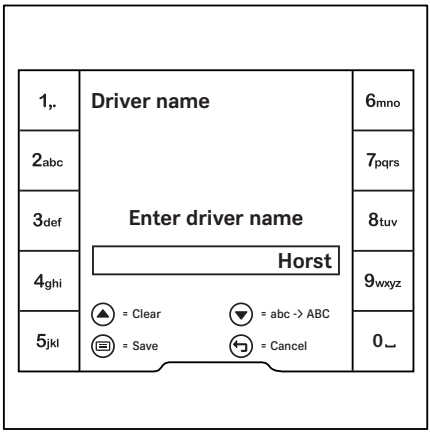


## Deleting driver profiles

The fleet manager has access authorisation to delete driver profiles.

– Activate the "Access authorisation for the fleet manager".

– Press the `Truck settings` softkey.

– Press the `Manage driver profiles` softkey. ▷

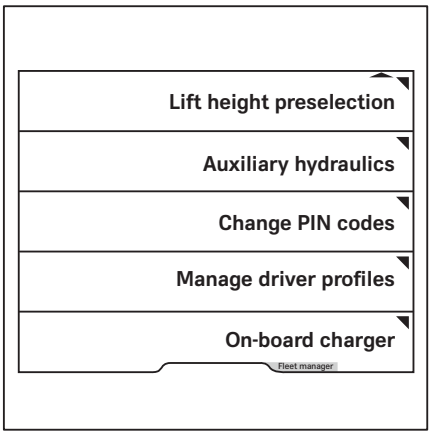

– Press the `Delete driver profiles` ▷ softkey.

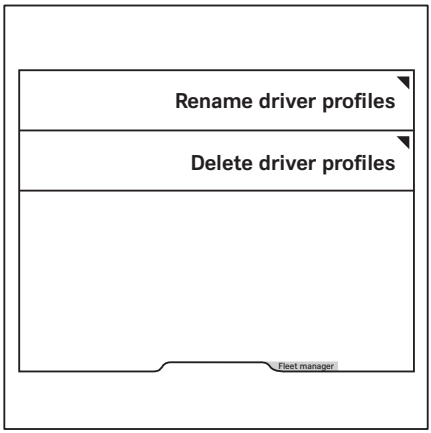


– Press the softkey for the driver profile to be ▷ deleted.

The driver profile is deleted.

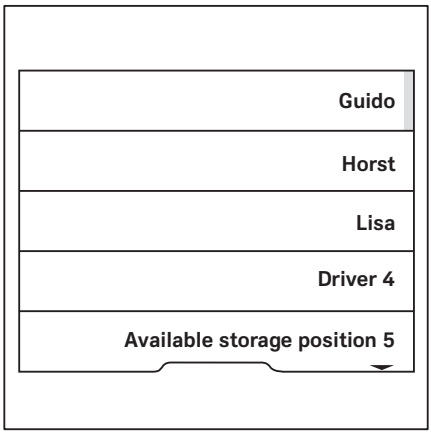

# Lighting

## Retrofitting lighting equipment

NOTE

*All of the lighting equipment described below can be retrofitted by the authorised service centre.*

– Contact the authorised service centre with regard to this matter.

## Meaning of the symbols ▷

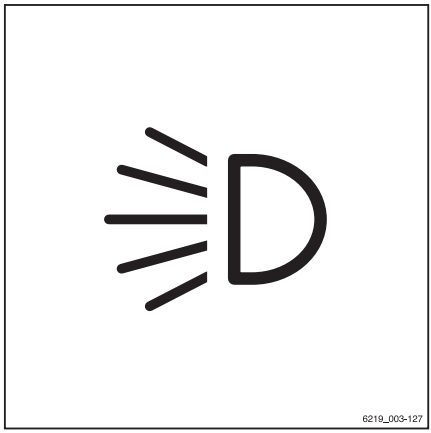


Individual lighting devices are switched on and off using the "Lighting" sub-menu.

– To access this sub-menu, push the button ☰.

Symbols for the lighting and their meanings

| | |
|---|---|
| | Parking light |
| | Headlights |
| | Hazard warning system[1] |
| | Rotating beacon |
| | STILL SafetyLight |
| | Warning zone light |
| | Front working spotlights |
| | Rear working spotlights |
| | Roof working spotlights |

Only the symbols of the lighting devices that are installed in the truck can be selected. When one of the lighting devices is switched on, the activation bar next to the relevant symbol lights up orange.

NOTE

*If the truck is equipped with the "StVZO" (German Road Traffic Licensing Regulations) variant, the hazard warning system works even when the truck is switched off.*

1 This function is not available if the truck is equipped with the "StVZO" (German Road Traffic Licensing Regulations) variant. In this case, the hazard warning system is switched on and off via the hazard warning button on the steering column. For more information, refer to the section entitled "Hazard warning system".

## Driving lights

▷

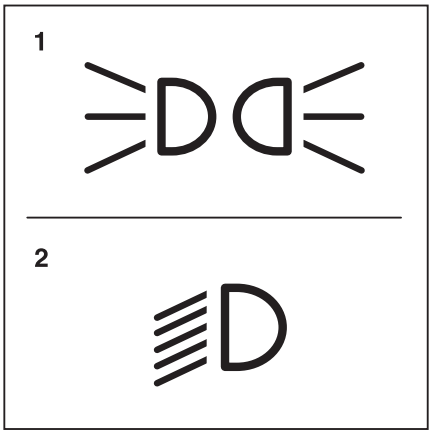


1 Parking light
2 Driving light

– To switch on the parking light (1), push the associated Softkey on the display-operating unit.

The front side lights and the tail lights light up.

– To switch on the driving light (2), press the associated Softkey on the display-operating unit.

The headlights and tail lights light up. If the truck has StVZO (German Road Traffic Licensing Regulations) equipment (variant) and a licence plate lamp, then this also lights up.

– To switch off the driving light (2), press the Softkey again.

The driving light and licence plate lamp go out.

– To switch off the parking light (1), push the Softkey again.

The front side lights and the tail lights go out.

If the truck does not have StVZO (German Road Traffic Licensing Regulations) equipment (variant), then the parking light and driving light can be switched on and off independently of each other.

# Working spotlights

## Front and rear working spotlights

– To switch on the front working spotlights (3), push the associated Softkey on the display-operating unit.

The front working spotlights light up.

– To switch off the front working spotlights (3), push the Softkey again.

The front working spotlights go out.

– To switch on the rear working spotlights (4), push the associated Softkey on the display-operating unit.

The rear working spotlights light up.

– To switch off the rear working spotlights (4), push the Softkey again.

The rear working spotlights go out.

**NOTE**

*For the StVZO (German Road Traffic Licensing Regulations) variant, the parking light is also switched on when the working spotlights are switched on. The licence plate lamp (if present) is also switched on when the forward-facing working spotlights are switched on.*

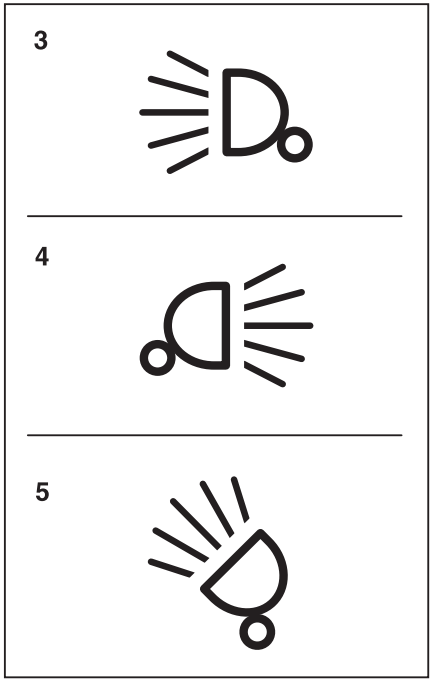


3 Front working spotlights
4 Rear working spotlights
5 Roof spotlights

## Working spotlights on the roof and the side of the lift mast

The roof spotlights light up the working area when the fork carriage is raised.

– To switch on the roof spotlights (5), push the associated Softkey on the display-operating unit.

The roof spotlights (5) light up.

– To switch off the roof spotlights (5), push the Softkey again.

The roof spotlights (5) go out.

**NOTE**

*Depending on the configuration, the roof spotlights automatically switch on when the fork carriage is raised.*

## Working spotlight for reverse travel (variant)

In this equipment variant, a working spotlight for reverse travel is fitted on the rear of the overhead guard and provides optimum illumination of the roadway during reverse travel.

– Press the softkey.

The activation bar next to the symbol lights up. The working spotlight does not yet light up.

– Set the drive direction to "Reverse".

The working spotlight for reverse travel lights up.

If the drive direction is set to "Forward", the working spotlight goes out.

## Turn indicators

The turn indicators are switched on and off via the travel direction selector and indicator module.

▷

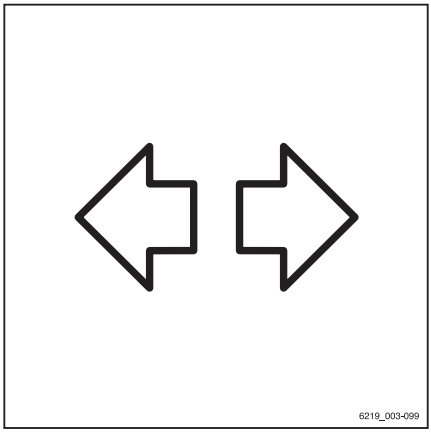

– To switch on the left or right turn indicator, move the lever (1) to the desired direction. ▷

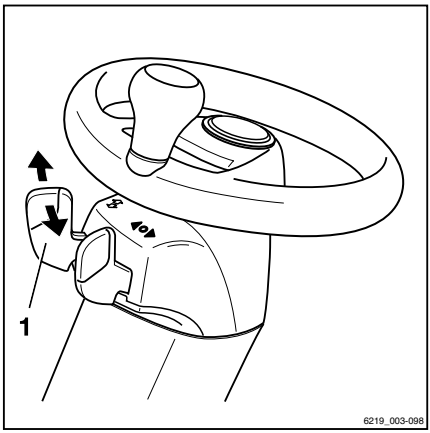


The turn indicators and the turn indicator display (2) or (3) on the display-operating unit flash. ▷

– To switch off the turn indicators, push the lever (1) back to the centre position.

All turn indicators and the turn indicator displays on the display/operating unit stop flashing.

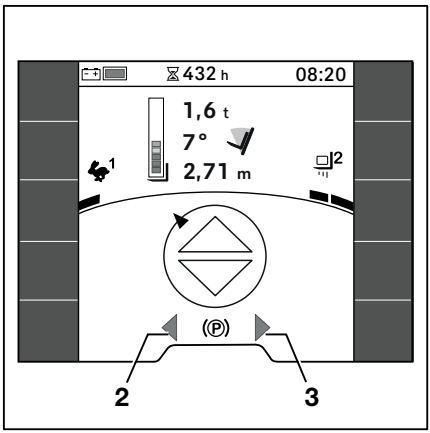

## Hazard warning system

Switching the hazard warning system on and off is different for trucks with and without the StVZO (German Road Traffic Licensing Regulations) variant.

– To switch on the hazard warning system, push the associated Softkey on the display-operating unit.

All direction indicators and the turn indicator displays on the display-operating unit flash.

– To switch off the hazard warning system, push the Softkey again.

All direction indicators and the turn indicator displays on the display-operating unit stop flashing.

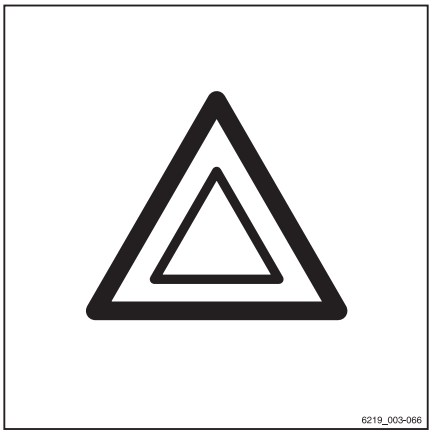


### Specific features of the StVZO (German Road Traffic Licensing Regulations) variant

For the StVZO (German Road Traffic Licensing Regulations) variant, the hazard warning system cannot be switched on and off via the display/operating unit. It is switched on and off using the hazard warning button on the steering column. The hazard warning system in this variant works even when the truck is switched off.

– To switch on the hazard warning system, push the hazard warning button (1). When the truck is switched off, press and hold the hazard warning button for approx. one second.

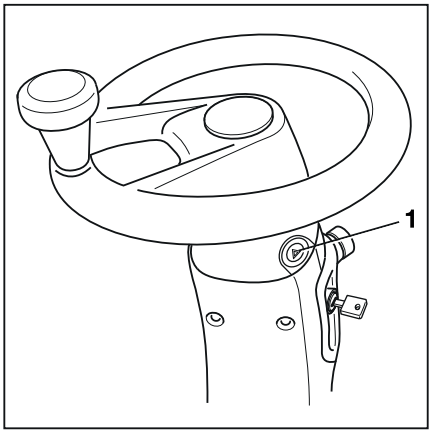

The turn indicators and the turn indicator displays (2, 3) on the display-operating unit flash. ▷

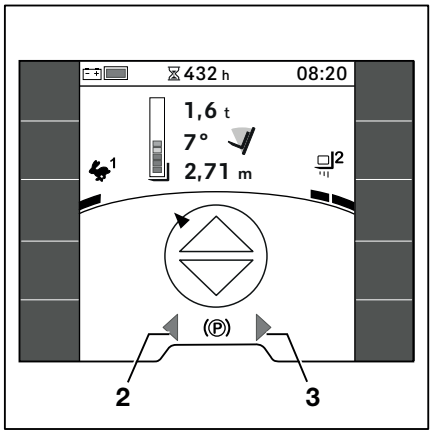


– To switch off the hazard warning system, push the hazard warning button (1) again.

All direction indicators and the turn indicator displays on the display-operating unit stop flashing.

## StVZO equipment ▷

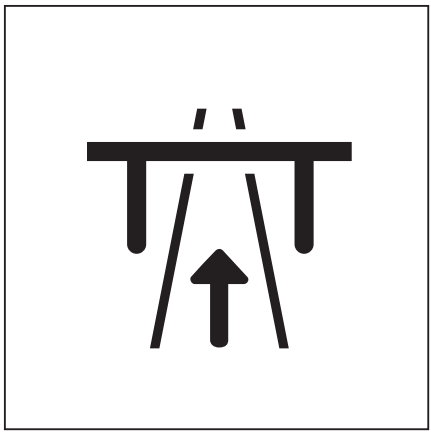

If the truck is fitted with StVZO (German Road Traffic Licensing Regulations) equipment, the softkey is stored in the favourites bar. This softkey is used to switch off all lighting devices that are not permitted on roads subject to German traffic regulations (StVO).

This relates to the following variants of lighting equipment:

- STILL SafetyLight and STILL SafetyLight 4Plus
- Warning zone light and warning zone light plus
- Working spotlight
- Rotating beacon

– To switch this lighting equipment off, press the softkey.

The orange activation bar lights up next to the softkey.

– To switch this lighting equipment on, press the softkey again.

The orange activation bar goes out.

NOTE

*This function is configured for German traffic regulations (StVO) ex works.*

- *Outside of Germany, observe the national regulations for the country of use.*
- *The authorised service centre can amend the function so that fewer lighting devices or more lighting devices are switched off.*

The softkey is also located in the `Driving` menu .

## Rotating beacon

– To switch on the rotating beacon, push the associated Softkey on the display-operating unit.

The rotating beacon is switched on.

– To switch off the rotating beacon, push the Softkey again.

The rotating beacon goes out.

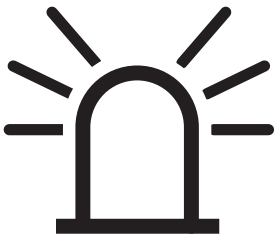

6219_003-067

## STILL SafetyLight® and STILL SafetyLight 4Plus® (variants)

**WARNING**

Danger of damage to eyes from looking into the STILL SafetyLight® and STILL SafetyLight 4Plus®.

Do **not** look into the STILL SafetyLight® or STILL SafetyLight 4Plus®.

STILL SafetyLight® and STILL SafetyLight 4Plus® are visual warning units designed to enable early detection of trucks in driving areas with low visibility (such as drive lanes, high racks), as well as at blind junctions. The STILL SafetyLight® or

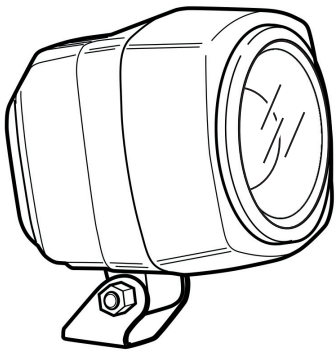

6219_003-110

STILL SafetyLight 4Plus® is mounted on a support on the overhead guard such that it is not affected by jolts and vibrations.

Depending on the version, the STILL Safety-Light® projects one or more light-blue light spots in front of or behind the truck and thus warns others about the approaching truck. With the STILL SafetyLight 4Plus®, several light blue light spots are projected as a chase light. The chase light indicates the location of the truck with its direction of travel.

Depending on the configuration of the truck, the STILL SafetyLight® or STILL Safety-Light 4Plus® automatically switches itself on when the truck is moving. This means that, during reverse travel (variant), for example, it can be used as an additional light for the working spotlight for reverse travel. The STILL SafetyLight® or the STILL Safety-Light 4Plus® can also be switched on and off on the display-operating unit.

– To do so, press the softkey.

**NOTE**

*If the truck is to be operated on public roads, the STILL SafetyLight® and the STILL Safety-Light 4Plus® must be switched off.*

## Warning zone light and warning zone light plus (variants)

**WARNING**

Danger of damage to eyes from looking into the warning zone light.

Do **not** look into the warning zone light (plus).

Adjust the warning zone light (plus) so as not to dazzle bystanders or the driver when climbing in and out of the truck.

The warning zone light and the warning zone light plus are mounted on supports on the overhead guard such that it is not affected by jolts and vibrations.

The warning zone light projects a light bar next to the truck on both the left-hand side and right-hand side of the truck or even behind the truck. This light bar indicates the danger areas to the sides or rear of the truck while in operation. See the section entitled "Danger area" in the chapter entitled "Handling loads". ▷

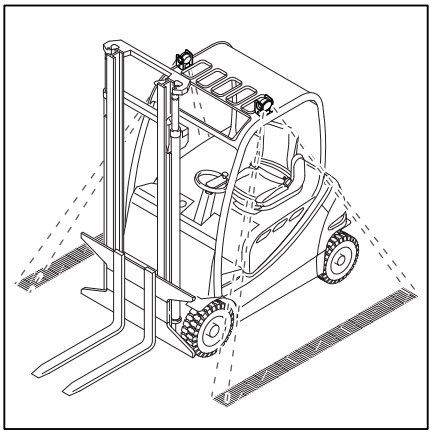

The warning zone light plus projects a semi-circle around the truck. This light bar indicates the danger areas to the sides and rear of the truck while in operation. See the section entitled "Danger area" in the chapter entitled "Handling loads". ▷

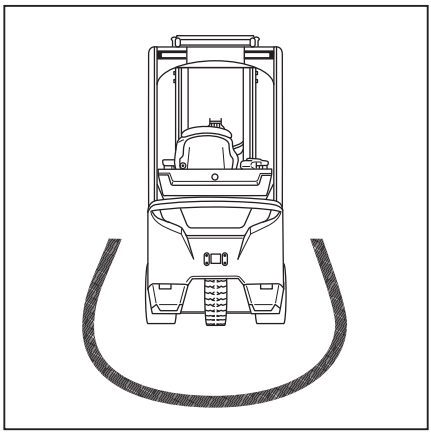

The warning zone light (plus) switches on and off again together with the truck.

If the truck has StVZO (German Road Traffic Licensing Regulations) equipment, the warning zone light (plus) can be switched on and off via the display-operating unit.

– To do so, press the softkey.

NOTE

*If the truck is to be operated on public roads, the warning zone light must be switched off.*

– Before using the truck, make sure that the warning zone light is working and has been adjusted correctly.

The distance from the light bar to the truck must be between 70...75 cm.

– To adjust the warning zone light, see the section entitled "Adjusting the warning zone light" in the chapter entitled "Preserving operational readiness".

When ordering the truck, you can choose between a blue or red warning zone light (plus).

# Efficiency and drive modes

## Blue-Q (variant) ▷

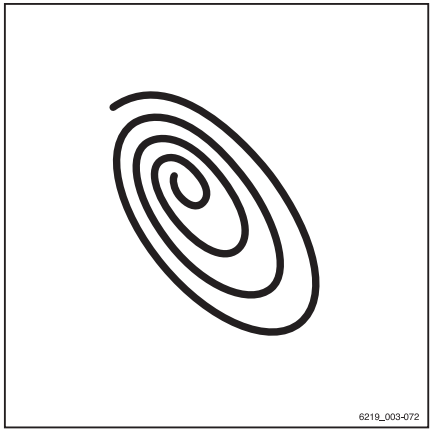


### Functional description

The Blue-Q efficiency mode affects both the drive unit and the activation of the additional consumers and reduces the truck's energy consumption. Blue-Q can be switched on and off via a softkey.

If efficiency mode is switched on, the acceleration behaviour of the truck changes to make acceleration more moderate.

When travelling at low speeds, normally when manoeuvring, no reduction is noticeable even if Blue-Q is switched on. For moderate speeds from approx. 7 km/h, acceleration is gentler. Therefore, on distances of up to approx. 40 m, lower speeds are reached than would be the case if the efficiency mode was not activated. As in "STILL Classic" mode, the maximum speed is 20 km/h.

Blue-Q has no influence on:

- Maximum speed
- Climbing capability
- Pulling force
- Braking characteristics

### Effects on additional consumers

The following table shows conditions that cause certain additional consumers to shut down when Blue-Q is activated. The additional consumers available depend on the truck equipment.

| Shut-off | Seat switch | Truck is stationary | Drive direction |
|---|---|---|---|
| Front working spotlight* | X | X | Reverse > 3 km/h |
| Rear working spotlight* | X | X | Forwards |
| Roof spotlight* | X | X | > 3 km/h |
| Headlight* | X | X | - |
| Front wiper | X | X | Reverse > 3 km/h |
| Rear wiper | X | X | Forwards |
| Roof wiper | X | X | - |
| Seat heater | X | - | - |
| Cab heating | X | - | - |

| Shut-off | Seat switch | Truck is stationary | Drive direction |
|---|---|---|---|
| Screen heating | X | - | - |
| *No shut-off for StVZO (German Road Traffic Licensing Regulations) equipment (variant) | | | |

## Switching Blue-Q on and off

– To switch on Blue-Q efficiency mode, push the softkey .

The Blue-Q symbol appears on the display/operating unit and Blue-Q efficiency mode is switched on.

– To switch off Blue-Q efficiency mode, push the associated softkey again.

The Blue-Q symbol disappears and Blue-Q efficiency mode is switched off.

NOTE

*The fleet manager can also use his access authorisation to activate Blue-Q efficiency mode permanently. See the next section.*

## Configuring Blue-Q

Fleet manager access authorisation allows the fleet manager to activate Blue-Q efficiency mode permanently or to enable it to be switched on and off via softkey.

– Enable `Access authorisation`.

– Press the `Truck settings` softkey.

The menu that opens provides the following selection:

- `Permanent`
  The driver cannot switch Blue-Q on and off. Blue-Q is permanently active. The Blue-Q symbol appears permanently on the display-operating unit.
- `By pressing a button`
  The driver can switch Blue-Q on and off via the softkey.

– Push the required softkey.

The orange activation bar appears next to the pushed softkey.

The main display button takes you to the main display.

## STILL Classic and sprint mode ▷

The drive modes affect the handling of the truck.

Two different drive modes are available:

1 **STILL Classic**
This mode is active after the truck has been switched on. This mode is the default setting and provides a balance between hydraulic functions and driving functions. The maximum speed is 18 km/h. No symbol is shown on the display.

2 **Sprint mode**
In sprint mode, the truck accelerates more quickly to a maximum speed of 20 km/h. This mode also increases the lifting speed. Sprint mode is for driving on clear and spacious terrain.

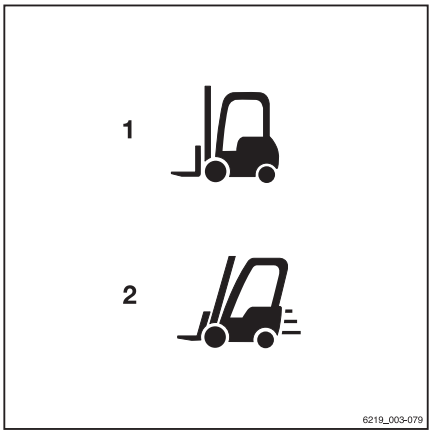

NOTE

*If sprint mode is used, the truck's energy consumption is higher. The battery is therefore discharged more quickly. The drive units heat up more quickly.*

## Switching sprint mode on and off

– To switch on sprint mode, push the associated softkey.

The "sprint mode" symbol (2) appears on the display of the display-operating unit. Sprint mode is switched on.

– To switch off the mode, push the softkey again.

The symbol disappears and the mode is switched off. The truck is then back in STILL Classic mode.

## Automatic switch off for sprint mode

If the truck is operated in sprint mode at the maximum performance level, the truck will consume more energy. As a result, the battery is discharged faster and the traction drives and energy supply may become too hot.

The battery voltage and the temperature of the traction drives and energy supply are monitored continuously. If under voltage (does not apply to lithium-ion batteries) or overheating occurs, sprint mode is automatically deactivated.

If the truck is automatically switched off due to under voltage, sprint mode can then only be switched on again if the following conditions are met:

- The battery is fully recharged.
- The truck has been restarted.

If the truck is automatically switched off due to overtemperature, sprint mode can then only be switched on again when the drive units have cooled down.

# Driving

## Safety regulations when driving

### Driving conduct

The driver must follow the public rules of the road when driving in company traffic.

The speed must be appropriate to the local conditions.

For example, the driver must drive slowly around corners, in tight passageways, when driving through swing-doors, at blind spots, or on uneven surfaces.

The driver must always maintain a safe braking distance from vehicles and persons in front, and must always have the truck under control. Stopping suddenly, turning quickly and overtaking at dangerous or blind spots must be avoided.

– Initial driving practice must be carried out in an empty space or on a clear roadway.

The following are forbidden during driving:

- Allowing arms and legs to hang outside the truck
- Leaning the body over the outer contour of the truck
- Climbing out of the truck
- Moving the driver's seat
- Adjusting the steering column
- Releasing the seat belt
- Disabling the restraint system
- Raising the load higher than 300 mm above the ground (with the exception of manoeuvring processes during the placement into stock/removal from stock of loads)
- Using electronic devices, for example radios, mobile phones etc.

**⚠ WARNING**

The use of multimedia and communication equipment as well as playing these devices at an excessive volume during travel or when handling loads can affect the operator's attention. There is a risk of accident!

– Do not use devices during travel or when handling loads.

– Set the volume so that warning signals can still be heard.

**⚠ WARNING**

In areas where use of mobile phones is prohibited, use of a mobile phone or radio telephone is not permitted.

– Switch off the devices.

## Visibility when driving

The driver must look in the drive direction and have a sufficient view of the driving lane.

Particularly for reverse travel, the driver must be sure that the driving lane is clear.

When transporting goods that impair visibility, the driver must drive the truck in reverse.

If this is not possible, a second person acting as a guide must walk in front of the truck.

In this case the driver must only move at walking pace and with extra care. The truck must be stopped immediately if eye contact with the guide is lost.

Rear-view mirrors are only to be used for observing the road area behind the truck and not for reverse travel. If visual aids (mirror, monitor) are necessary to achieve sufficient visibility, it is necessary to practise using them. For reverse travel using visual aids, extra care should be taken.

When using attachments, special conditions apply; see the chapter entitled "Fitting attachments".

Any glass (variant, e.g. windscreen) and mirrors must always be clean and free of ice.

# Roadways

## Dimensions of roadways and aisle widths

The following dimensions and aisle width requirements apply under the specified conditions to ensure safe manoeuvring. In each case, it must be checked whether a larger aisle width is necessary, e.g. in the case of different load dimensions.

Within the EU, Directive 89/654/EEC regarding the minimum safety and health requirements for the workplace must be observed. The respective national guidelines apply for areas outside the EU.

The required aisle widths depend on the dimensions of the load.

The aisle widths for pallets are as follows:

| Model | Type | Aisle width [mm] | |
|---|---|---|---|
| | | With pallet 1000x1200 crosswise | With pallet 800x1200 lengthwise |
| RX60-25 | 6301 | 3700 | 3890 |
| RX60-25/600 | 6302 | 3705 | 3895 |
| RX60-25L/600 | 6304 | 3905 | 4116 |
| RX60-30 | 6305 | 3742 | 3940 |
| RX60-30L | 6307 | 3940 | 4124 |
| RX60-30L/600 | 6308 | 3941 | 4141 |
| RX60-35 | 6309 | 3941 | 4141 |
| Applies to telescopic, NiHo and triple masts; no allowance is given for protruding fork arms. | | | |

The truck must be used only on roadways that do not have excessively sharp curves, excessively steep gradients or excessively narrow or low entrances.

## Driving on ascending and descending gradients

**⚠ WARNING**

Risk of accident due to the drive unit switching off!

Driving up and down longer gradients can cause the drive unit to overheat and switch off. The truck will then no longer decelerate when the accelerator pedal is released and will coast.

Driving up and down longer gradients greater than 15% is not permitted due to the minimum specified braking values. The climbing capability values given below apply only to negotiating obstacles on the roadway and to temporary differences in level, e.g. HGV ramps.

– Consult the authorised service centre before driving on long ascending and descending gradients greater than 15%.

**NOTE**

*The values specified in the "Maximum climbing capability" table can be used only to compare the performance of forklift trucks in the same category. The specified values in no way represent the normal daily operating conditions.*

It is permitted to drive the truck on the following ascending and descending gradients:

| Model | Type | Maximum gradient [%] | |
|---|---|---|---|
| | | With load (PP/HP) | Without load (PP/HP) |
| RX60-25 | 6301 | 23.5/17.1 | 29.5/26.6 |
| RX60-25/600 | 6302 | 22.6/16.5 | 27.4/27.4 |
| RX60-25L/600 | 6304 | 22.0/16.0 | 28.0/24.2 |
| RX60-30 | 6305 | 20.1/14.6 | 27.4/24.2 |
| RX60-30L | 6307 | 20.1/14.6 | 30.6/24.1 |
| RX60-30L/600 | 6308 | 19.4/14.1 | 29.1/22.8 |
| RX60-35 | 6309 | 17.8/12.9 | 28.2/21.9 |
| PP = Plus Performance<br>HP = High Performance (variant) | | | |

The ascending and descending gradients must not exceed the gradients listed above and must have a rough surface.

The top and bottom of the gradient must feature smooth and gradual transitions to prevent the load from falling to the ground or the truck being damaged.

– Do not drive downhill faster than the truck can drive uphill on the same gradient.

– If necessary, determine the maximum permissible speed with a test drive uphill.

## Warning in the event that components protrude beyond the truck contour

Trucks are often required to drive through very narrow or very low spaces such as aisles or containers. The dimensions of the trucks are designed for this purpose. However, movable components may protrude beyond the truck contour and be damaged or torn off. Examples of these components are:

- An unfolded roof panel in the driver's cab
- Open cab doors

## Condition of the roadways

Roadways must be sufficiently firm and even. The surface must be free from contamination and fallen objects.

Drainage channels, level crossings and similar obstacles must be evened out and, if necessary, ramps must be provided so that trucks can drive over these obstacles with as few bumps as possible.

Take note of the load capacity of manhole covers, drain covers etc.

There must be sufficient distance between the highest points of the truck or the load and the fixed elements of the surrounding area. The height is based on the overall height of the lift mast and the dimensions of the load; see the chapter entitled "Technical data".

## Rules for roadways and the working area

It is only permitted to drive on routes authorised for traffic by the operating company or its representatives. Traffic routes must be free from obstacles. The load must only be set down and stored in the designated locations. The operating company and its representatives must ensure that unauthorised third parties do not enter the working area.

NOTE

*Please observe the definition of the following responsible person: "operating company".*

### Hazardous areas

Hazardous areas on roadways must be indicated by standard traffic signs or, if necessary, by additional warning signs.

## Selecting drive programmes 1 to 3 ▷

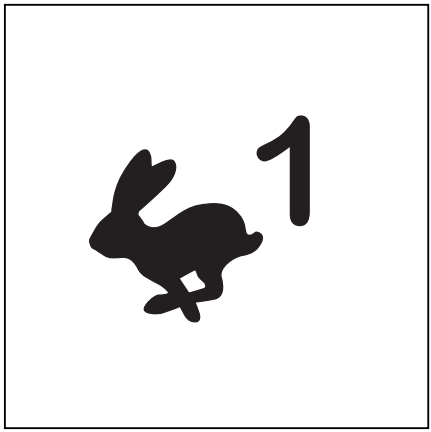


The truck has three drive programmes with different preset driving and braking characteristics. The basic principle is that the higher the number of the drive programme selected, the greater the driving dynamics.

The drive programme is selected using the display-operating unit under the `Drive` menu item.

– Press the 1... softkey to select the desired drive programme. 3

– If the drive programmes are saved as a favourite on a softkey, press the softkey until the number of the desired drive programme is shown on the display. ▷

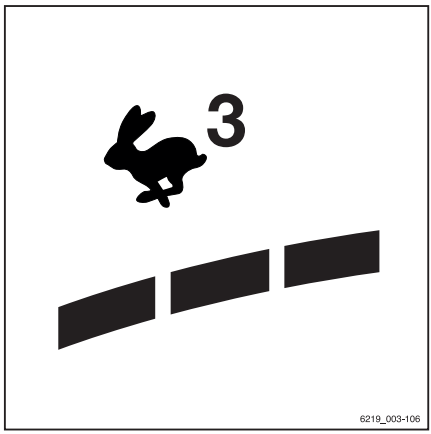


The number of dynamic bar segments indicates the driving dynamics of the selected drive programme.

## Selecting drive programme A or B

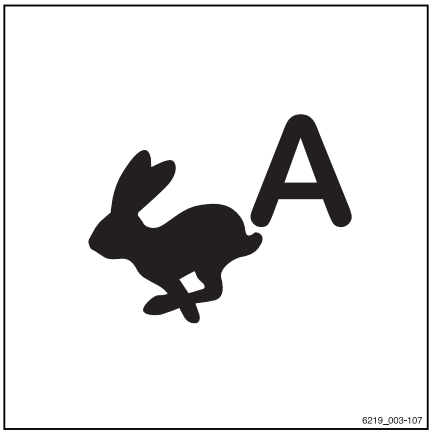


The truck has two driving programmes for personalised handling and braking characteristics.

Unlike the fixed drive programmes "1 to 3", the programs "A" and "B" can be configured. The procedure for this is described in the following section.

The drive programme is selected using the display-operating unit under the `Drive` menu item.

– Press the A or B softkey to select the desired drive programme.

– If the drive programmes are saved as a favourite on a softkey, press the softkey until the letter of the desired drive programme is shown on the display.

## Configuring drive programmes A and B

The drive programmes can be configured by the driver.

NOTE

*Access to the settings menu is only available if the truck is at a standstill and the parking brake is applied. If the parking brake is released prematurely, the settings menu will close.*

– Stop the truck.

– Apply the parking brake.

– Press the button.

The first menu level appears.

– Press the softkey.

– Press the `Truck settings` softkey.

– Press the `Drive programmes` softkey.

The `drive programme` menu appears.

– Press the associated softkey for `drive programme A` or `drive programme B`.

Configuration of the drive programmes using `drive programme A` is explained here.

The **`Setdrive programme A`** menu appears. ▷

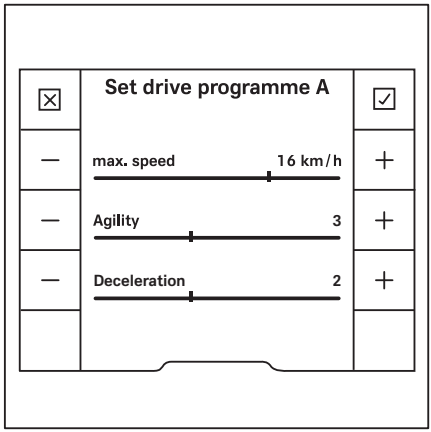


The following parameters can be set:

- `Max. speed`
  Determines the maximum speed (varies depending on the truck model).
- `Agility`
  Determines the acceleration behaviour and the reversing behaviour using five levels.
  `1` indicates the lowest agility and `5` indicates the greatest agility
- `Braking`
  Determines the electrical brake retardation when the accelerator pedal is released in five stages.
  `1` indicates the lowest delay and `5` indicates the greatest delay

– To select a higher stage, press the ＋ softkey.

– To select a lower stage, press the − softkey.

– To save the setting, press the ☑ softkey.

The settings are saved.

– To cancel the setting, press the ☒ softkey.

The settings return to the most recently saved value.

Press the ↰ button once to return to the previous menu level without saving the changes.

## Selecting the drive direction

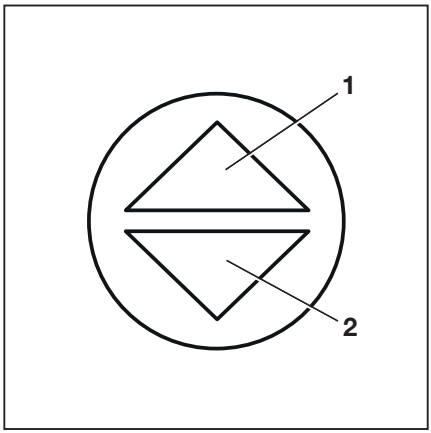


The drive direction of the truck must be selected using the drive direction switch/drive direction selection lever before attempting to drive. The method of actuating the drive direction switch/drive direction selection lever depends on the operating devices that are fitted in the truck.

The drive direction switch is located on the operating devices for the hydraulic functions. The drive direction selection lever is located on the travel direction selector and indicator module (variant).

NOTE

*The drive direction can also be changed during travel. Your foot can remain on the accelerator pedal while you do so. The truck is then decelerated and accelerated again in the opposite direction (reversing).*

The indicator for the selected drive direction ("forwards" (1) or "backwards" (2)) lights up on the display-operating unit.

### Neutral position

If leaving the truck for a prolonged period, the neutral position must be selected in order to avoid the truck suddenly moving off due to an inadvertent actuation of the accelerator pedal.

– Briefly select the drive direction switch/drive direction selection lever for the direction opposite to the current drive direction.

The drive direction indicator on the display-operating unit goes out.

NOTE

*When the seat is vacated, the selected drive direction is set to the "neutral position". To drive, the drive direction switch/drive direction selection lever must be actuated again.*

## Actuating the drive direction switch with the multiple-lever version

▷

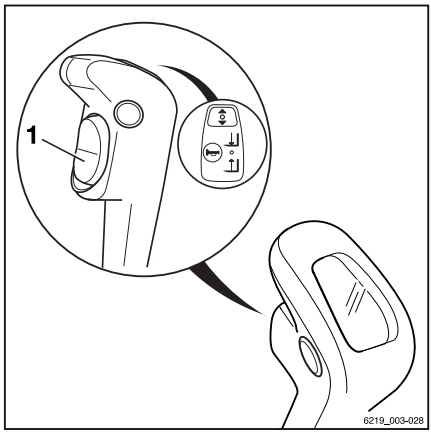


– For the "forwards" drive direction, push the drive direction switch (1) downwards.

– For the "backwards" drive direction, push the drive direction switch (1) upwards.

NOTE

*If the drive direction switch (1) is defective and the truck stops in a danger area, the drive direction selection lever on the travel direction selector and indicator module (variant) can be used for emergency driving. Refer to the section entitled "Emergency driving via the drive direction switch/drive direction selection lever" in the chapter entitled "Procedure in emergencies".*

## Actuating the drive direction switch with the mini-lever version

▷

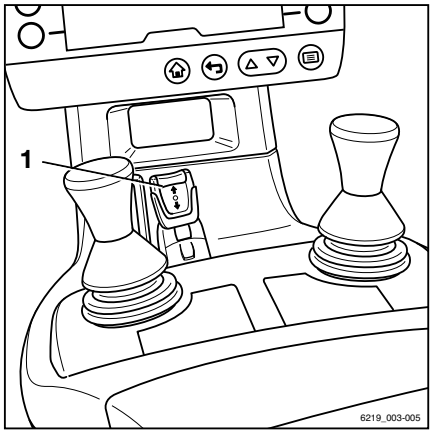


– For the "forwards" drive direction, push the drive direction switch (1) forwards.

– For the "backwards" drive direction, pull the drive direction switch (1) backwards.

NOTE

*If the drive direction switch (1) is defective and the truck stops in a danger area, the drive direction selection lever on the travel direction selector and indicator module (variant) can be used for emergency driving. Refer to the section entitled "Emergency driving via the drive direction switch/drive direction selection lever" in the chapter entitled "Procedure in emergencies".*

## Actuating the drive direction switch with the Fingertip version

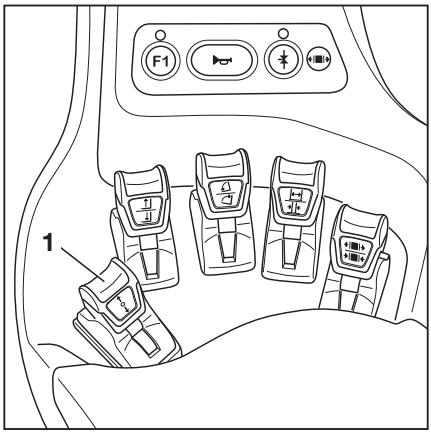


- For the "forwards" drive direction, push the drive direction switch (1) forwards.
- For the "backwards" drive direction, pull the drive direction switch (1) backwards.

NOTE

*If the drive direction switch (1) is defective and the truck stops in a danger area, the drive direction selection lever on the travel direction selector and indicator module (variant) can be used for emergency driving. Refer to the section entitled "Emergency driving via the drive direction switch/drive direction selection lever" in the chapter entitled "Procedure in emergencies".*

## Actuating the vertical rocker button for the "drive direction" with the Joystick 4Plus version

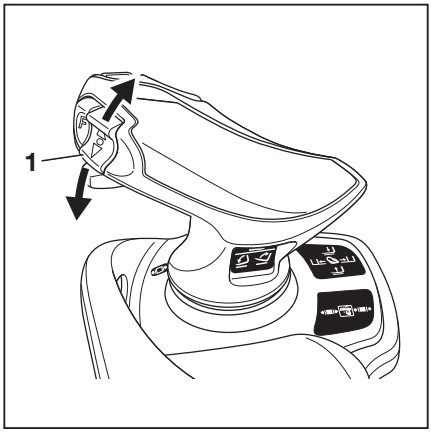


- For the "forwards" drive direction, push the vertical rocker button for the "drive direction" (1) upwards.
- For the "backwards" drive direction, push the vertical rocker button for the "drive direction" (1) downwards.

NOTE

*If the drive direction switch (1) is defective and the truck stops in a danger area, the drive direction selection lever on the travel direction selector and indicator module (variant) can be used for emergency driving. Refer to the section entitled "Emergency driving via the drive direction switch/drive direction selection lever" in the chapter entitled "Procedure in emergencies".*

## Actuating the drive direction selection lever with the travel direction selector and indicator module version

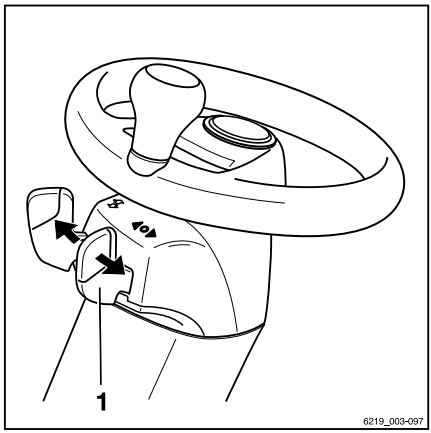


– For the "forwards" drive direction, push the drive direction selection lever (1) forwards.

– For the "backwards" drive direction, push the drive direction selection lever (1) backwards.

Alternatively, the drive direction can also be selected using the drive direction switches on the operating devices for the hydraulic functions.

**NOTE**

*If the drive direction selection lever (1) is defective and the truck stops in a danger area, the drive direction switch on the operating device for the hydraulic functions can be used for emergency driving. Refer to the section entitled "Emergency driving via the drive direction switch/drive direction selection lever" in the chapter entitled "Procedure in emergencies".*

## Starting drive mode

**DANGER**

**Being trapped under a rolling or tipping truck could cause fatal injuries!**

– Sit on the driver's seat.

– Fasten the seat belt.

– Activate the available restraint systems.

– Observe the information in the chapter entitled "Safety regulations when driving".

The driver's seat is equipped with a seat switch. This seat switch checks whether the driver's seat is occupied. If the driver's seat is not occupied or if the seat switch is malfunctioning, the truck cannot be moved. All lifting functions are disabled. In these situations, the message `Sit on driver's seat` is shown on the display of the display-operating unit.

– Sit on the driver's seat. Fasten the seat belt.

– Lift the fork carriage until the necessary ground clearance is achieved.

– Tilt the lift mast backwards.

– Release the parking brake.

– Select the desired drive direction.

The indicator for the selected drive direction ("forwards" (1) or "reverse" (2)) lights up on the display-operating unit. ▷

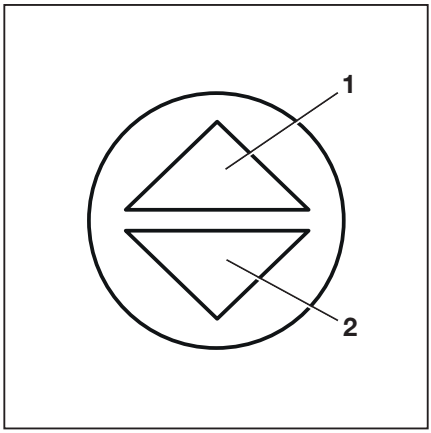


NOTE

*Depending on the equipment, the following variants of warning units for reverse travel may be present:*

- *An acoustic signal will be heard.*
- *The STILL SafetyLight lights up.*
- *The hazard warning system flashes.*

– Press the accelerator pedal (3). ▷

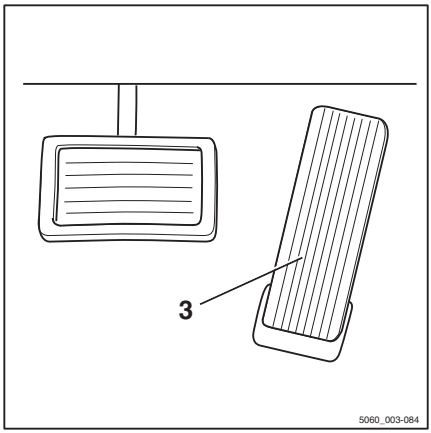


The truck travels in the selected drive direction. The speed is controlled by the accelerator pedal position. The truck brakes when the accelerator pedal is released.

NOTE

*The truck is also held in place on ascending or descending gradients even if the electric parking brake is not engaged.*

**DANGER**

**Risk of accident due to brake failure!**

The regenerative brake only functions if the truck is switched on, the emergency off switch has not been actuated and the parking brake is released.

– Use the brake pedal if the regenerative brake malfunctions.

– Engage the parking brake before leaving the truck.

## Changing the drive direction

– Take your foot off the accelerator pedal.

– Select the desired drive direction.

– Press the accelerator pedal.

The truck will travel in the selected drive direction.

NOTE

*The drive direction can also be changed during travel. Your foot can remain on the accelerator pedal while you do so. The truck is then decelerated and accelerated again in the opposite direction (reversing).*

NOTE

*If an electrical fault occurs in the accelerator, the drive unit is switched off. In this situation, the truck is not electrically braked. Once the electrical fault has been corrected, it will be possible to drive the truck again by releasing the accelerator pedal and then actuating the accelerator pedal again. If the truck still cannot be operated, park the truck securely and contact the authorised service centre.*

## Starting drive mode, dual pedal version (variant)

DANGER

**Being trapped under a rolling or tipping truck could cause fatal injuries!**

– Sit on the driver's seat.

– Fasten the seat belt.

– Activate the available restraint systems.

– Observe the information in the chapter entitled "Safety regulations when driving".

The driver's seat is equipped with a seat switch. This seat switch checks whether the driver's seat is occupied. If the driver's seat is not occupied or if the seat switch is malfunctioning, the truck cannot be moved. All lifting functions are disabled. In these situations, the message `Sit on driver's seat` is shown on the display of the display-operating unit.

– Sit on the driver's seat. Fasten the seat belt.

– Lift the fork carriage until the necessary ground clearance is achieved.
– Tilt the lift mast backwards.
– Release the parking brake.
– Press the right accelerator pedal (1) for the "forwards" drive direction and press the left accelerator pedal (2) for the "backwards" drive direction.

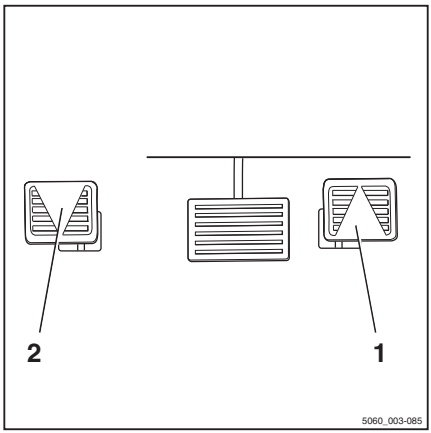


NOTE

*In the dual pedal version, the drive direction switches on the operating devices do not function.*

The indicator for the selected drive direction ("forwards" (1) or "reverse" (2)) lights up on the display-operating unit.

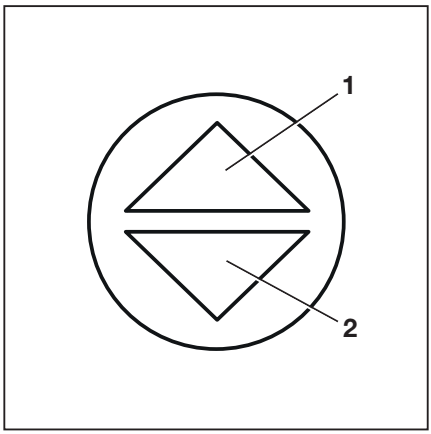


NOTE

*Depending on the equipment, the following variants of warning units for reverse travel may be present:*

- *An acoustic signal will be heard.*
- *The STILL SafetyLight lights up.*
- *The hazard warning system flashes.*

The truck travels in the selected drive direction. The speed is controlled by the accelerator pedal position. The truck brakes when the accelerator pedal is released.

NOTE

*The truck is also held in place on ascending or descending gradients even if the electric parking brake is not engaged.*

**⚠ DANGER**

**Risk of accident due to brake failure!**

The regenerative brake only functions if the truck is switched on, the emergency off switch has not been actuated and the parking brake is released.

– Use the brake pedal if the regenerative brake malfunctions.
– Engage the parking brake before leaving the truck.

### Changing the drive direction

– Remove your foot from the actuated accelerator pedal.
– Press down the accelerator pedal for the opposite direction.

The truck travels in the selected drive direction.

**NOTE**

*If an electrical fault occurs in the accelerator, the drive unit is switched off. In this situation, the truck is not electrically braked. Once the electrical fault has been corrected, it will be possible to drive the truck again by releasing the accelerator pedal and then actuating the accelerator pedal again. If the truck still cannot be operated, park the truck securely and contact the authorised service centre.*

## Operating the service brake ▷

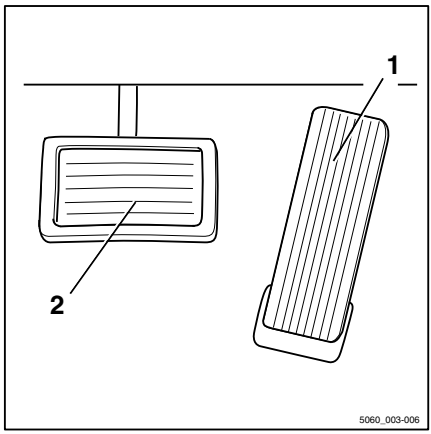


The regenerative brake converts the acceleration energy of the truck into electrical energy. When the accelerator pedal is released, the truck decelerates.

– To do this, release the accelerator pedal (1).
– If the braking effect is inadequate, use the brake pedal (2) in addition to the service brake.

In the first section of the brake pedal's travel, only the regenerative braking takes effect. As the pedal is depressed further, the mechanical brake is also activated and acts on the drive wheels.

Electrical braking recovers energy for the battery. This results in a longer operating time between the charging processes and less wear to the brakes.

The truck can also be braked with the service brake by actuating the brake pedal (2). In the first section of the brake pedal's travel, only the regenerative braking takes effect. As the pedal is depressed further, the mechanically actuated service brake is also activated and acts on the drive wheels.

**⚠ DANGER**

**There is a risk of accident if the service brake fails!**

If the regenerative braking effect noticeably deteriorates, a component failure may have occurred. It will no longer be possible to sufficiently brake the truck.

- When braking with the service brake, it may be necessary to use the parking brake to assist the braking process.
- Notify the authorised service centre.
- Do not operate the truck again until the service brake has been repaired.

**⚠ DANGER**

**At speeds that are too high, there is a danger that the truck could slip or overturn!**

The braking distance of the truck depends on the weather conditions and the level of contamination on the roadway. Note that the basic braking distance increases with the square of the speed.

- Adapt the driving and braking style to suit the weather conditions and the level of contamination on the roadway.
- Always choose a driving speed that will provide a sufficient stopping distance.

**NOTE**

*If the parking brake is actuated while the truck is in motion, the truck may decelerate with a jerk.*

## Actuating the electric parking brake

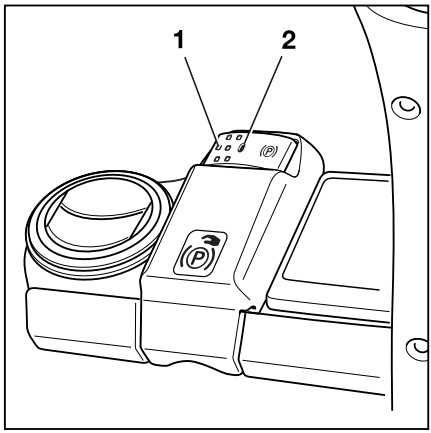

**DANGER**

**There is a risk of fatal injury from being run over if the truck rolls away.**

- Do not park the truck on a gradient.
- Do not leave the truck until the parking brake has been applied.
- In an emergency, secure the truck with wedges on the downhill-facing side to prevent it from rolling away.

This truck is equipped with an electric parking brake. The parking brake must not be applied manually when the driver leaves the truck. The parking brake is applied automatically.

Despite these automatic aids, the driver is always responsible for parking the truck safely. The safety information about parking the truck safely applies.

**NOTE**

*The electric parking brake can be actuated or released only if the battery male connector has been connected **and** the truck is switched on.*

If the parking brake is applied, this is indicated by a symbol in the display-operating unit instead of the driving speed.

Symbols for the parking brake in the display-operating unit

| Symbol | Description |
|---|---|
| (Ⓟ) | The parking brake was applied automatically.<br>Actuating the accelerator pedal automatically releases the parking brake. |
| (Ⓟ) | The parking brake was applied by pressing the push button.<br>Pressing the push button is the only way to release the parking brake. |

## Releasing the electric parking brake after the truck has been switched on

– Press the push button (1) to release the parking brake.

The truck is held in place by the traction motor.

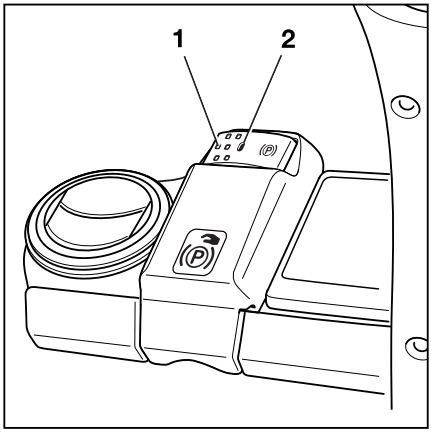


## Manually actuating the electric parking brake when the truck is stationary

### Applying the parking brake manually

– Press the push button (1).

The electric parking brake will make a noise when it is applied and the LED (2) lights up continuously. The symbol appears in the display.

### Releasing the parking brake manually

– Sit on the driver's seat.

– Press the push button (1).

The electric parking brake will make a noise when it releases and the LED (2) goes out.

The driving speed display is replaced by the symbol .

## Automatic actuation of the electric parking brake when the truck is stationary

The electric parking brake is applied automatically when the truck is stationary in the following situations:

### Automatically triggered actuation when the truck is stationary

| Cause | Effect |
|---|---|
| The driver's seat is vacated. | The electric parking brake will make a noise when it is applied.<br>The LED (2) lights up with a steady light. |
| The accelerator pedal is released (brake pedal not actuated). | After a specified delay, the electric parking brake is applied with an audible sound.<br>The LED (2) lights up with a steady light.<br>On a gradient, the truck is held by the traction motor for 3 seconds. Then the electric parking brake is applied. |

| Cause | Effect |
|---|---|
| The truck is switched off. | The electric parking brake is immediately applied with an audible sound.<br>The LED (2) will light up briefly with a steady light until the control units switch off. |
| The emergency off switch is actuated. | The electric parking brake is immediately applied with an audible sound.<br>The LED (2) lights up with a steady light. |

If the electric parking brake has applied automatically, the symbol Ⓟ appears in the display-operating unit. The LED (2) lights up.

– To release the electric parking brake, the driver must sit down on the driver's seat again.

– Press the accelerator pedal.

The electric parking brake will make a noise when it is released. The LED (2) goes out.

**NOTE**

*If the symbol Ⓟ appears in the display, the truck cannot be driven until the electric parking brake has been released by pressing the push button (1). This is the case if the parking brake has been applied manually.*

## Actuation of the electric parking brake when the truck is in motion

### Manual actuation when the truck is in motion

– Press the push button (1).

The truck is braked with the drive unit in accordance with the selected drive programme. Once the truck has come to a standstill, the electric parking brake is applied with an audible sound. The LED (2) lights up with a steady light. The symbol Ⓟ appears in the display-operating unit.

– If the braking effect is insufficient, also use the service brake.

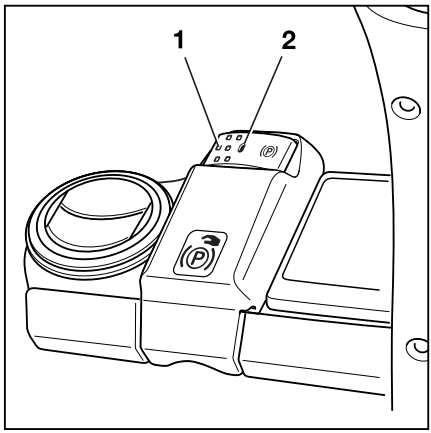

NOTE

*If the drive unit fails, the truck can be braked by pressing the push button (1). The truck brakes more strongly if the push button (1) is pressed and held or pressed several times. The electric parking brake cannot be released by actuating the accelerator pedal.*

**WARNING**

Risk of accident!

The truck may decelerate abruptly.

– Fasten the seat belt.

**Automatically triggered actuation when the truck is in motion**

| Cause | Effect |
|---|---|
| The driver's seat is vacated. | The truck is braked in accordance with the selected drive programme.<br>Once the truck has come to a standstill, the electric parking brake is applied with an audible sound.<br>The LED (2) lights up with a steady light. The symbol (Ⓟ) appears in the display. |
| The key switch is switched off. | The truck will coast to a stop.<br>Once the truck has come to a standstill, the electric parking brake is applied with an audible sound.<br>The LED (2) lights up with a steady light. The symbol (Ⓟ) appears in the display until the control units switch off. |
| The emergency off switch is actuated. | The truck will coast to a stop.<br>Once the truck has come to a standstill, the electric parking brake is applied with an audible sound.<br>The LED (2) lights up with a steady light.<br>The symbol (Ⓟ) appears in the display. |
| The truck accelerates sharply, even though the driver's seat has been vacated. | The electric parking brake is immediately applied with an audible sound.<br>The LED (2) lights up with a steady light. The symbol (Ⓟ) appears in the display. |
| The truck accelerates sharply, even though the accelerator pedal has not been actuated. | The parking brake is immediately applied with an audible sound.<br>The LED (2) lights up with a steady light. The symbol (Ⓟ) appears in the display. |

## Malfunctions in the electric parking brake

**DANGER**

**There is a risk of fatal injury from being run over if the truck rolls away.**

– Do not park the truck on a gradient.
– Do not leave the truck until the parking brake has been applied.
– In an emergency, secure the truck with wedges on the downhill-facing side to prevent it from rolling away.

– Before leaving the truck, make sure that the parking brake is properly applied.

### Message: Apply parking brake via button.

If the truck control unit detects a malfunction in the parking brake, the truck cannot be switched off.

- The ⓘ `Apply parking brake via button` message appears on the display-operating unit.
- The LED (1) on the push button (2) flashes.
- A warning signal sounds.

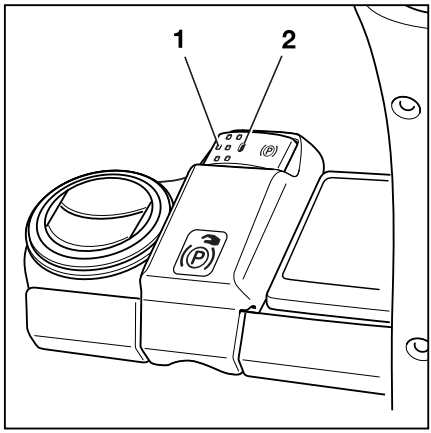


**NOTE**

*If it becomes necessary to switch off a truck with a faulty parking brake, always secure the truck to prevent it from rolling.*

A possible cause of the malfunction is that the parking brake cannot determine whether the truck is stationary or still in motion. The following section describes how to actuate the parking brake when it is faulty:

#### Actuating a faulty parking brake when the truck is stationary

There are two ways to apply the parking brake:

– Press and hold the push button (1) for at least five seconds and then release the push button.

or

– Press the push button (1) several times in succession so that the push button is actuated for a total of five seconds.

The parking brake is applied with an audible sound. After the push button is released, the parking brake should not make any further sounds; if a sound is heard, this means the push button was pressed for less than five seconds. In this case, press the push button again to apply the parking brake again. Repeat this process as necessary until the parking brake applies and the Ⓟ symbol appears.

**Actuating a parking brake with a malfunction when the truck is in motion**

– Press the push button (1).

The parking brake is applied.

**NOTE**

*The truck brakes more strongly if the push button (1) is pressed and held down for longer or pressed several times.*

## "Safe parking" function

This function monitors the braking effect after the truck is parked. If a sensor is fitted on the lift mast (variant), it also checks whether the fork carriage is lowered.

This function alerts the driver with an audible warning signal if:

- The driver leaves the driver's seat and it has not been possible to apply the parking brake
- The driver leaves the driver's seat without lowering the fork carriage (variant)
- The driver attempts to switch off the truck and it has not been possible to apply the parking brake
- The truck starts moving within the next 20 seconds after the parking brake is applied

### Activation and intervention by the "Safe parking" function

| Cause | Effect |
|---|---|
| The driver's seat is vacated. The electric parking brake cannot be applied or previously could not be applied. | The following message appears in the display:<br>`Parking brake cannot be applied.`<br>- To confirm, press the ☑ softkey.<br>A warning signal sounds when the driver's seat is vacated. Sitting in the driver's seat silences the warning signal again. |
| The truck must be switched off. The electric parking brake cannot be applied or previously could not be applied. | The truck cannot be switched off. A warning signal sounds.<br>The following messages appear in the display:<br>`Parking brake cannot be applied.` ⓘ<br>- To confirm, press the ☑ softkey.<br>`Switch off truck anyway?` ?<br>- To confirm, press the ☑ softkey.<br>`Secure truck against rolling away.` ⚠<br>- Secure the truck with wedges so that the truck does not roll away.<br>- To confirm, press the ☑ softkey.<br>It is now possible to switch off the truck. |

**⚠ DANGER**

**Risk of fatal injury from being run over if the truck rolls away!**

Park the truck securely if the parking brake is faulty. Secure the industrial truck to prevent it from rolling away.

– To do this, strictly adhere to the following instructions:

– If the parking brake cannot be applied automatically or via the push button, perform an emergency actuation of the parking brake. Refer to the section entitled "Emergency actuation of the parking brake" in the chapter "Procedure in emergencies".

– If the parking brake cannot be applied via the emergency actuation mechanism, secure the truck with wedges to prevent it from rolling.

– Have the parking brake repaired by an authorised service centre.

## Message:
## Parking brake cannot be applied

If the truck control unit detects a malfunction in the parking brake, the truck cannot be switched off. ▷

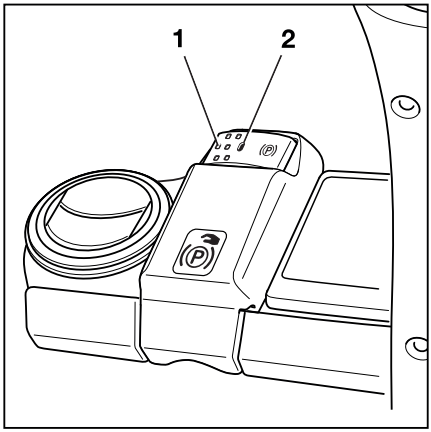


- The message `Parking brake cannot be applied` (!) appears on the display-operating unit.
- The LED (2) on the push button (1) flashes.
- A warning signal sounds.

NOTE

*If it is necessary to switch off a truck with a faulty parking brake, the section entitled "Switching off the truck when the electric parking brake is faulty" must be observed. It is essential to secure the truck to prevent it from rolling away.*

NOTE

*If the parking brake is released via the emergency actuation mechanism, it is possible to drive the truck at a low speed.*

- *The truck can be moved out of the hazardous situation or to the repair location.*
- *Driving with a faulty parking brake requires the driver to be especially vigilant.*

– If the parking brake cannot be applied automatically or via the push button, apply the parking brake via the emergency actuation process. Refer to the section entitled "Emergency actuation of the parking brake" in the chapter "Procedure in emergencies".

– If the parking brake cannot be applied via the emergency actuation process, secure the truck with wedges so that the truck cannot roll away.

– Have the parking brake repaired by an authorised service centre.

## Steering

**DANGER**

**Risk of accident!**

If the hydraulics fail, there is a risk of accident as the steering characteristics will have changed.

– Do not operate the truck if it has a defective steering system.

– Steer the truck by turning the steering wheel (1) accordingly.

Turning the steering wheel to the left (L) steers the truck to the left (L).

Turning the steering wheel to the right (R) steers the truck to the right (R).

The arrow (2) displays the direction in which the truck is moving.

For information on the turning radius, see the "Technical data".

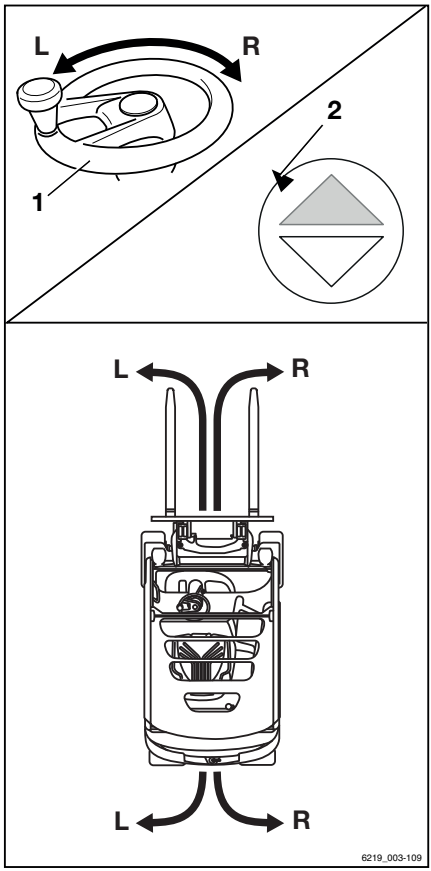

## Reducing speed when turning (Curve Speed Control)

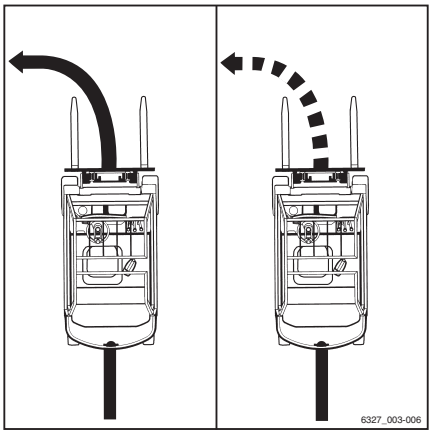


This function reduces the speed of the truck as the steering angle increases, regardless of the amount to which the accelerator has been actuated. If the steering angle is reduced again upon exiting the curve, the truck accelerates in line with how far the accelerator is depressed.

However, the function does not release the driver from the duty to approach a curve at a speed according to the following factors:

- The carried load
- The roadway conditions
- The radius of the curve

**⚠ DANGER**

**The Curve Speed Control function cannot override the physical limits of stability. Despite this function, there still is a risk of tipping!**

– Before using this function, familiarise yourself with the change to the driving and steering characteristics of the truck.

**⚠ DANGER**

**Increased risk of tipping if the Curve Speed Control function is disabled! If the controller fails while the truck is in motion or if the controller is disabled, the truck will no longer automatically brake when steering.**

– Do not turn off the key switch while driving.

– Actuate the emergency stop switch only in emergencies.

– Always adapt your driving style to the conditions.

Despite the Curve Speed Control function, the truck may overturn in extreme cases within the following situations:

- Cornering too fast on uneven or inclined roadways.
- Turning the steering wheel sharply while driving.
- Cornering with an inadequately secured load.
- Cornering too fast on a smooth or wet roadway.

## Speed reduction when the cab door is open

**⚠ WARNING**

Risk of accident from sudden deceleration of the truck

If the cab door is opened while the truck is in motion, the truck brakes automatically.

– Keep the cab door closed when driving.

With the "cab" equipment variant, the truck has a cab door monitoring function via a sensor. The signal from this sensor is linked with the signal from the buckle switch in the control electronics of the truck.

If the cab door is not closed and the seat belt is not fastened, the driving speed is limited to 4 km/h. The message `Close cab door or seat belt` appears in the display.

If the cab door is opened while the truck is in motion, the truck brakes automatically to a speed of 4 km/h. The message `Close cab door` appears in the display.

If the seat belt is released with the cab door closed, no message appears in the display.

**NOTE**

*There is a variant that prevents the truck from being driven when the cab door is open. The message* `Close cab door !` *appears in the display.*

## Speed restriction (variant) ▷

The speed restriction (variant) is a function that can be configured by the fleet manager. It sets a maximum speed that can either be permanent or be called up by the driver. This function helps the driver to comply with speed restrictions, e.g. in storage areas or other specific areas.

### Switching the speed restriction on and off

– Press the button.

The first menu level appears.

– Press the `Drive` softkey .

The `Drive` menu appears.

– Press the `Speed restriction` softkey .

The activation bar appears next to the symbol. The speed restriction is switched on.

– To switch off the speed restriction, press the softkey again.

### Configuring the speed restriction

NOTE

*Access to the settings menu is available only if the truck is at a standstill and the parking brake is applied. If the parking brake is released prematurely, the settings menu will close. Access is only granted when the password is entered by the fleet manager.*

– Stop the truck.

– Apply the parking brake.

– Press the button.

– Press the softkey.

The first menu level appears.

– Activate the "Access authorisation for the fleet manager".

– Press the `Truck settings` softkey .

– Press the `Speed restriction` softkey.

The menu that opens offers the following functions:

- `Permanent`
  Enabling this function limits the speed until the fleet manager disables this function.
- `By pressing a button`
  If this function is activated, the driver may switch the speed restriction on and off by pressing the softkey.
- `Entering the maximum speed`
  This menu can be used to set the maximum truck speed when speed restriction is active.

– To adjust the maximum speed, press the `Enter max. speed` softkey.

The `Speed restriction` menu opens. ▷

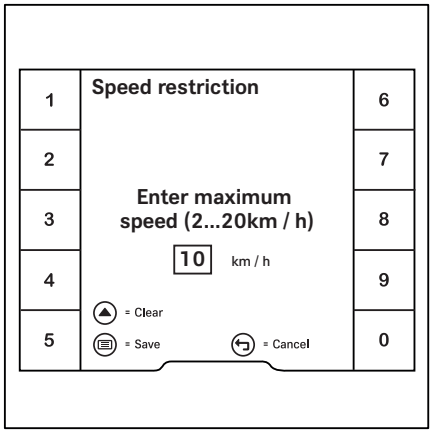


– Using the softkeys, set a maximum speed between 2 km/h and 20 km/h.

The maximum speed is dependent on the truck equipment and may be restricted by a factory setting.

– To `save`, press the button.

The maximum speed is entered.

– To `clear`, press the scroll button.

The entry is deleted.

– To `cancel`, press the back button.

The display reverts to the previous menu.

The main display button takes you to the main display.

## Cruise control (variant) ▷

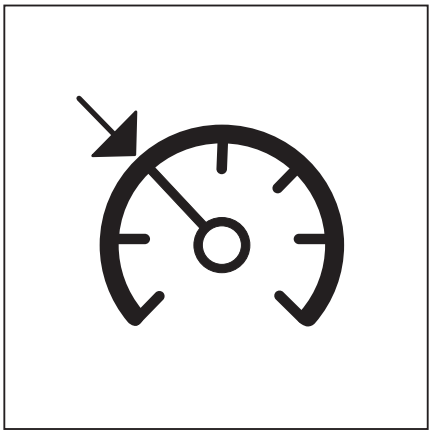

The "cruise control" assistance function allows the driver to maintain a constant truck speed over a reasonable distance. In addition, the cruise control function can be used to comply with any speed restriction that is in force on the company's premises. The cruise control function operates when driving forwards at a speed of 6 km/h or faster. The function is put on standby via the display-operating unit and can be activated and deactivated using the drive direction switch on the operating device for the hydraulic functions.

When the cruise control function is activated, the driver can save the speed when driving forwards at a speed of at least 6.0 km/h by pressing a button and can continue driving without actuating the accelerator pedal.

The pictogram (3) for operating the cruise control function is located on the operating device for the hydraulic functions.

### Putting the cruise control function on standby

In order for the cruise control function to be activated via the drive direction switch, the function must first be put on standby using the display-operating unit.

– Press the button.

The first menu level appears.

– Press the `Drive` softkey .

The `Drive` menu appears.

– Press the softkey.

The orange-coloured activation bar next to the softkey lights up. The cruise control function is ready.

The greyed-out symbol (1) appears on the display.

## Taking the cruise control function off standby

Pressing the softkey again takes the function off standby.

A single beep sounds. The symbol (1) is no longer displayed.

## Activating the cruise control function

**WARNING**

Risk of accident from failing to adjust speed!

Driving at excessive speeds can cause accidents, e.g. the truck could tip over when cornering.

– Adjust speed along the entire distance being travelled
– Pay particular attention to cornering speed
– Observe safety regulations when driving
– Observe the special behaviour of the cruise control function and the dangers associated with it

– Accelerate the truck to the required speed (at least 6.0 km/h)

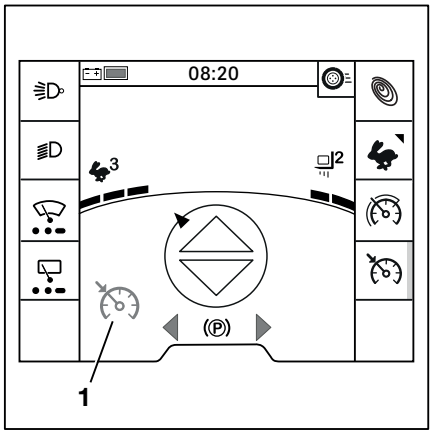

– Actuate the drive direction switch (2) for forwards travel. ▷

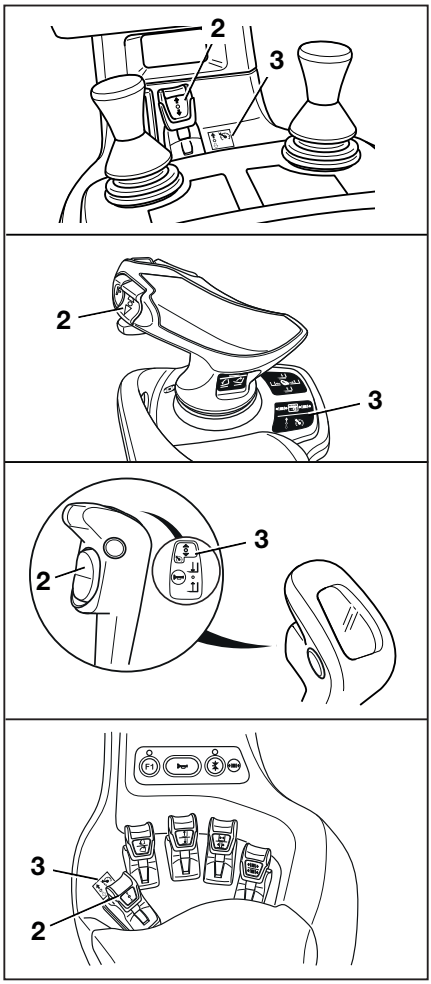


NOTE

*In the dual-pedal version (variant), the drive direction switch (2) is used exclusively to activate and deactivate the cruise control function (variant).*

The cruise control function is active. The current speed is saved.

Two beeps signal that the cruise control function is active. The symbol (4) appears in black in the display.

– Take your foot off the accelerator pedal.

The truck continues to drive at the selected speed until the cruise control function is deactivated.

– To save a different speed, deactivate the cruise control function and activate the function at the newly selected speed.

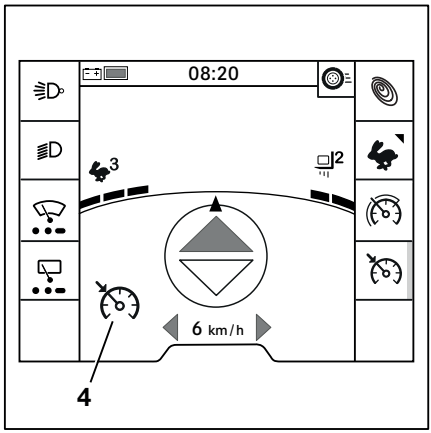


## Deactivating cruise control

Deactivating the cruise control function means that the speed is again controlled by the accelerator pedal. The cruise control function remains on standby. The function can be activated at any time when the accelerator pedal is depressed by pressing the drive direction switch for forwards travel again.

When the cruise control function is deactivated, the symbol (1) is greyed out.

**NOTE**

*The easiest way to deactivate the cruise control function is to touch the accelerator pedal.*

The following actions deactivate the cruise control function:

- Actuating the foot brake
- Actuating the parking brake
- Actuating the accelerator pedal

  Depressing the accelerator pedal beyond the set speed accelerates the truck.
- Changing the travel direction
- Press the drive direction switch for forwards travel again without actuating the accelerator pedal
- Pressing the softkey

  Pressing the softkey switches off the cruise control function.

Other conditions that will cause the truck control unit to deactivate the cruise control function are:

- Vacating the driver's seat
- Truck speed less than 2.5 km/h.
- Speed restriction set to less than 4.5 km/h.
- The truck control unit detects abnormalities, e.g. battery door open, battery carrier not retracted.

If the accelerator pedal is actuated in these circumstances, the truck is initially braked via the drive unit. The following message appear on the display:

`Release the accelerator pedal`

The truck will continue to drive only when the accelerator pedal is released and then actuated again.

If these conditions have changed again, the speed that was initially saved is set again.

**NOTE**

*If the truck is configured with automatic functions to reduce the driving speed and the driving speed is reduced to 6 km/h or less, the cruise control function is automatically deactivated.*

# Parking

## Parking the truck securely and switching it off

**DANGER**

**There is a risk of fatal injury from being run over if the truck rolls away.**

– Do not park the truck on gradients.

– In emergencies, secure the truck using wedges on the side facing downhill.

– Only leave the truck when the parking brake has been applied.

**DANGER**

**There is a risk to life caused by a falling load or if truck components are being lowered.**

– Lower the load fully before leaving the truck.

**CAUTION**

Batteries may freeze!

If the truck is parked in an ambient temperature of below -10°C for an extended period, the batteries will cool down. For lead-acid batteries, the electrolyte can freeze and damage the batteries. The truck is then not ready for operation.

– At ambient temperatures of below -10°C, only park the truck for short periods of time.

– Apply parking brake.

– Lower the fork carriage to the ground. ▷
– Tilt the lift mast forwards until the tips of the fork arms rest on the ground.
– If attachments (variant) are fitted, retract the working cylinders; see the chapter entitled "General instructions for controlling attachments".

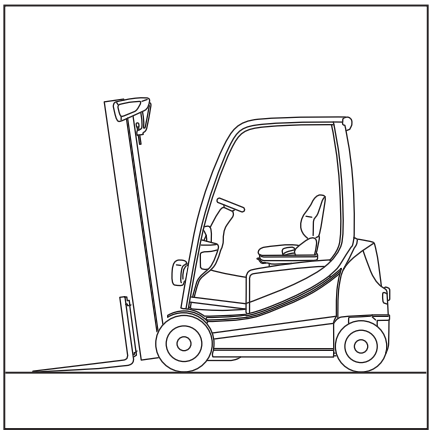

– Turn the switch key to position "0" and remove the key. ▷

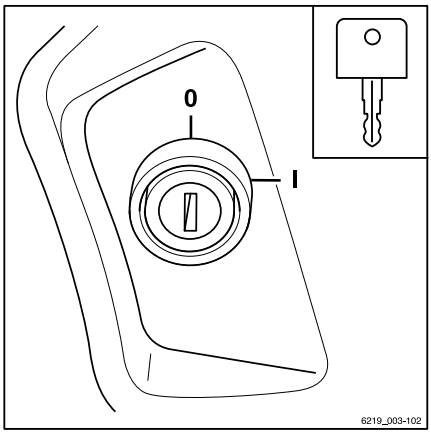

– In the "push button ignition" variant, press the button. (1)

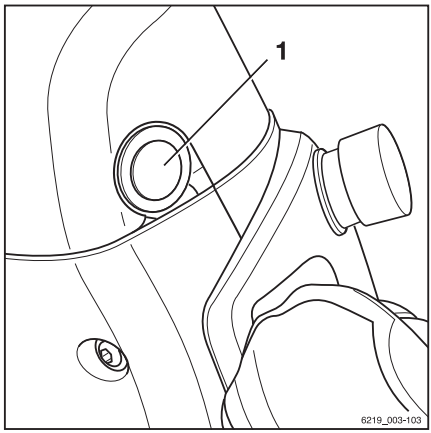


NOTE

*Switch keys, FleetManager cards (variant), FleetManager transponder chips (variant) and the PIN code for access authorisation (variant) must not be handed over to other persons unless explicit instructions to this effect have been given by the responsible fleet manager.*

## Wheel chock (variant)

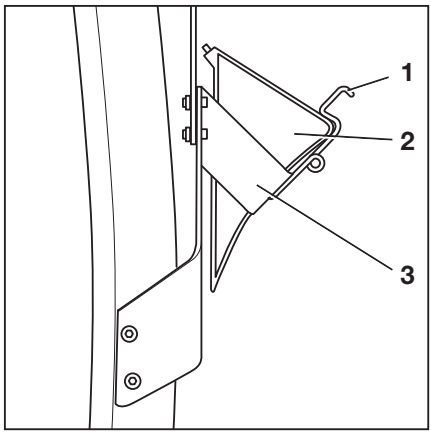


The wheel chock (variant) is used to prevent the truck from rolling away on a slope. It is located on the rear post of the overhead guard.

– Pull the support bracket (1) away from wheel chock and hold the support bracket in position.

– Grasp the wheel chock (2) and pull it upwards and out of the support mounting (3).

– Push the wheel chock under a front axle wheel on the side facing the descending gradient.

– After use, insert the wheel chock back into the support mounting so that the support bracket locks the wheel chock into position.

# Lifting

## Lifting system variants

The movement of the fork carriage and the lift mast heavily depends on the following equipment:

- The lift mast with which the truck is equipped, see ⇒Chapter "Lift mast versions", Page 210
- The operating device with which the hydraulic functions are controlled, see ⇒Chapter "Operating devices for the lifting system", Page 211

Regardless of the equipment variants of the truck, the basic specifications and procedures must be complied with, see ⇒Chapter "Safety regulations when handing loads", Page 235 .

## Lift mast versions

**⚠ DANGER**

**Risk of accident due to collision of the lift mast or load with low ceilings or entrances.**

– Note that the inner lift mast or load may be higher than the fork carriage.

– Observe the heights of ceilings and entrances.

One of the following lift masts may be attached to the truck:

### Telescopic lift mast

When lifting, the lift mast rises above the outer lift cylinders. The lift mast takes the fork carriage with it via the chains. In this scenario, the fork carriage rises at twice the speed of the inner lift mast. The top edge (1) of the inner lift mast can therefore be higher than the fork carriage.

▷

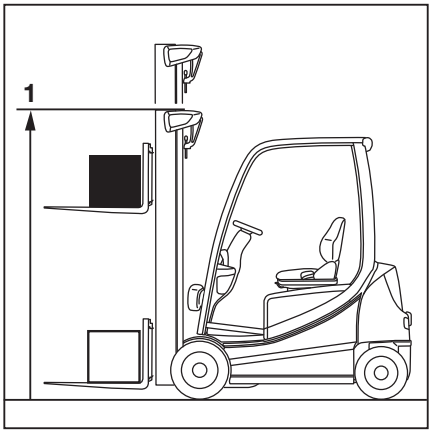

### NiHo lift mast (variant)

During lifting, the inner lift cylinder moves up to free lift (3) and then the outer lift cylinders raise the inner lift mast up to the maximum height (2).

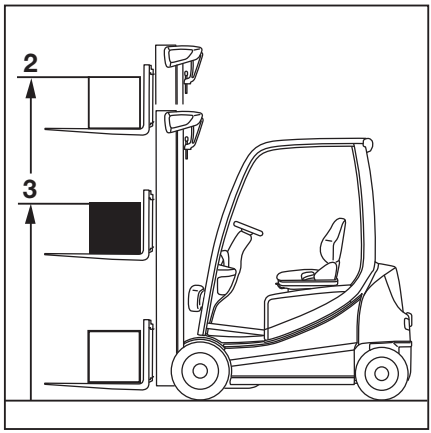


**NOTE**

*When lifting above the free lift, the fork carriage always remains at the upper edge of the extending lift mast.*

### Triple mast (variant)

During lifting, the inner lift cylinder moves up to free lift (3) and then the outer lift cylinders raise the inner lift mast up to the maximum height (2).

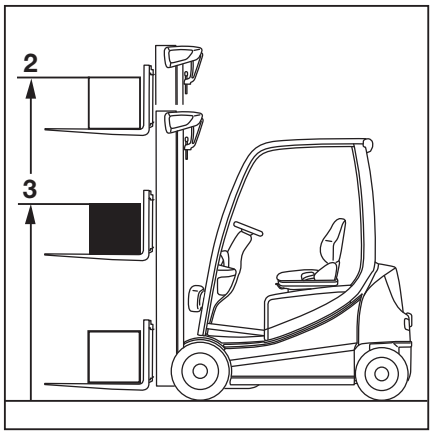


## Operating devices for the lifting system

The method of operating the lifting system depends on the operating devices included in the truck's equipment.

Possible equipment variants include:

- Multi-lever
- Double mini-lever
- Triple mini-lever
- Quadruple mini-lever

- Fingertip
- Joystick 4Plus

For clarity, the movements of the lifting system ▷ are referred to by the letters (A, B, C, D) in this subchapter.

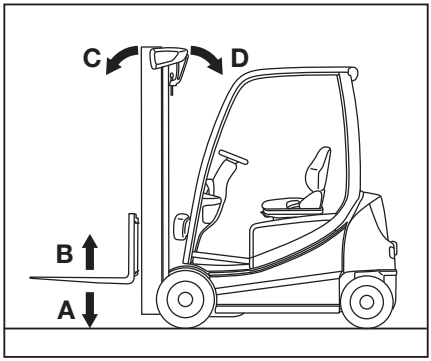


A Lower the fork carriage
B Lift the fork carriage
C Tilting the lift mast forwards
D Tilting the lift mast backwards

– See the relevant sections in this subchapter.

**⚠ WARNING**

Risk of injury due to delayed response from the truck!

If the lifting movements are configured to use low dynamics, the lifting system responds after a delay when the operating device is released, even in an emergency. The fork carriage does not stop immediately upon release. It only stops after approximately one second. This behaviour may also occur when specific settings are configured for the Dynamic Load Control 1 & 2 assistance systems.

– Work with particular attention and care.

**NOTE**

*If several hydraulic functions are used at the same time, these functions can influence each other. For example, if the fork carriage is raised and an attachment is operated at the same time, this may change the lifting speed or the operating speed of the attachment.*

## Controlling the lifting system using multi-lever operation ▷

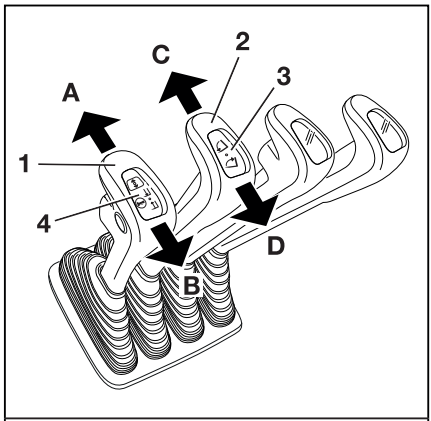


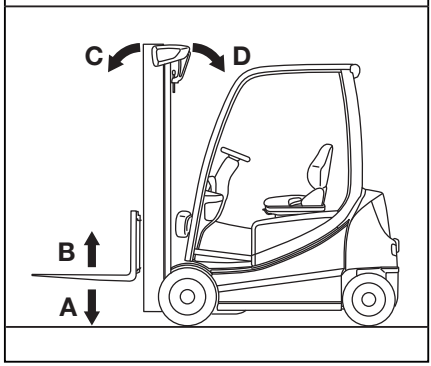


**⚠ DANGER**

**Reaching into or climbing between moving parts of the truck (e.g. lift mast, sideshifts, working equipment, load carrying devices etc.) can lead to serious injury or death and is therefore prohibited.**

– Observe the safety regulations for handling loads.
– Operate the lifting system from the driver's seat only.

**⚠ WARNING**

Risk of accident as a result of an operating error!

These operating instructions describe how to operate the lifting system in the factory configuration.

If the authorised service centre has configured a different configuration, the newly applied pictograms must be observed to ensure safe operation. The operating company must make all drivers aware of the fact that a different configuration has been configured.

– Observe the pictograms on the operating levers.
– Before use, check that the hydraulic functions are working correctly.

The lifting and lowering movements of the lift mast are controlled using the "lift-lower" operating lever (1). The adhesive label with the corresponding pictogram (4) is located on the operating lever.

The tilting movement of the lift mast is controlled using the "tilting" operating lever (2). The adhesive label with the corresponding pictogram (3) is located on the operating lever.

The pictograms are arranged according to the directions of movement of the operating lever (1) or (2).

### Lifting/lowering the fork carriage

To lift the fork carriage:

– Move the "lifting/lowering" operating lever (1) in the direction of the arrow (B).

To lower the fork carriage:

– Move the "lifting/lowering" operating lever (1) in the direction of the arrow (A).

## Tilting the lift mast

To tilt the lift mast forwards:

– Move the "tilting" operating lever (2) in the direction of the arrow (C).

To tilt the lift mast backwards:

– Move the "tilting" operating lever (2) in the direction of the arrow (D).

## Movements of the lifting system and meanings of the pictograms

A Lowering
B Lifting
C Tilting forwards
D Tilting backwards

## Controlling the lifting system using a double mini-lever ▷

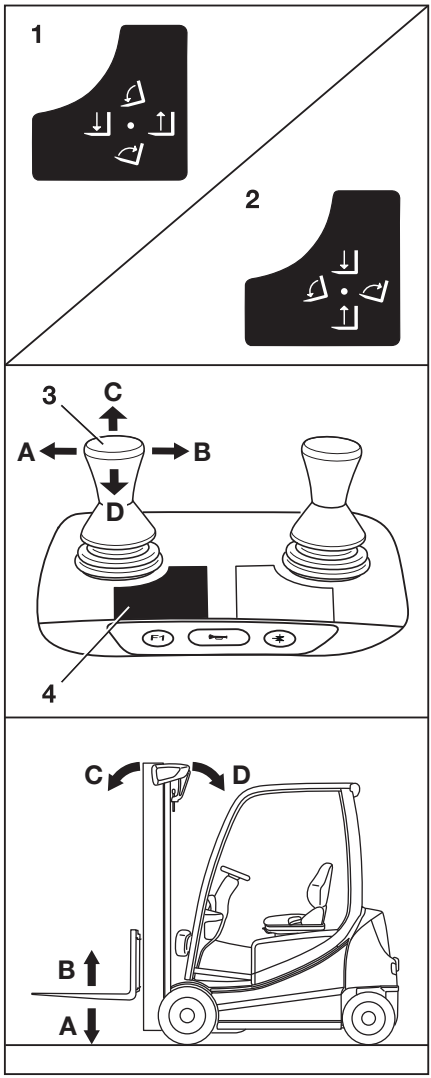


**DANGER**

**Reaching into or climbing between moving parts of the truck (e.g. lift mast, sideshifts, working equipment, load carrying devices etc.) can lead to serious injury or death and is therefore prohibited.**

- Observe the safety regulations for handling loads.
- Operate the lifting system from the driver's seat only.

**WARNING**

Risk of accident as a result of an operating error!

These operating instructions describe how to operate the lifting system in the factory configuration.

If the authorised service centre has configured a different configuration, the newly applied pictograms must be observed to ensure safe operation. The operating company must make all drivers aware of the fact that a different configuration has been configured.

- Observe the pictograms on the operating levers.
- Before use, check that the hydraulic functions are working correctly.

The lifting, lowering and tilting movements of the lift mast are controlled using the "lift mast" 360° lever (3). The adhesive label bearing the pictograms for the hydraulic functions (1) or (2) is affixed at the designated point (4).

The pictograms are arranged according to the direction of movement of the "lift mast" 360° lever (3).

**NOTE**

- *The truck is configured at the factory in accordance with the adhesive label (1). The following steps for moving the fork carriage and lift mast are based on this configuration.*
- *The configuration according to the adhesive label (2) with reversed functional axes can be ordered as a variant.*

## Lifting/lowering the fork carriage

To lift the fork carriage:

– Move the "lift mast" 360° lever (3) in the direction of the arrow (B).

To lower the fork carriage:

– Move the "lift mast" 360° lever (3) in the direction of the arrow (A).

## Tilting the lift mast

To tilt the lift mast forwards:

– Move the "lift mast" 360° lever (4) in the direction of the arrow (C).

To tilt the lift mast backwards:

– Move the "lift mast" 360° lever (4) in the direction of the arrow (D).

## Movements of the lifting system and meanings of the pictograms

A Lowering
B Lifting
C Tilting forwards
D Tilting backwards

## Controlling the lifting system using a triple mini-lever ▷

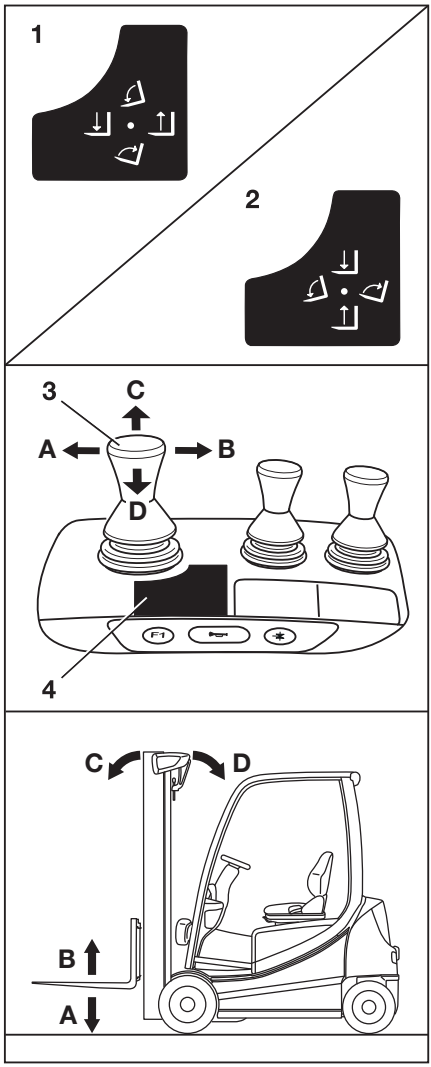


**⚠ DANGER**

**Reaching into or climbing between moving parts of the truck (e.g. lift mast, sideshifts, working equipment, load carrying devices etc.) can lead to serious injury or death and is therefore prohibited.**

– Observe the safety regulations for handling loads.
– Operate the lifting system from the driver's seat only.

**⚠ WARNING**

Risk of accident as a result of an operating error!

These operating instructions describe how to operate the lifting system in the factory configuration.

If the authorised service centre has configured a different configuration, the newly applied pictograms must be observed to ensure safe operation. The operating company must make all drivers aware of the fact that a different configuration has been configured.

– Observe the pictograms on the operating levers.
– Before use, check that the hydraulic functions are working correctly.

The lifting, lowering and tilting movements of the lift mast are controlled using the "lift mast" 360° lever (3). The adhesive label bearing the pictograms for the hydraulic functions (1) or (2) is affixed at the designated point (4).

The pictograms are arranged according to the direction of movement of the "lift mast" 360° lever (3).

**NOTE**

*The truck is configured at the factory in accordance with the adhesive label (1). The following steps for moving the fork carriage and lift mast are based on this configuration.*

### Lifting/lowering the fork carriage

To lift the fork carriage:

– Move the "lift mast" 360° lever (3) in the direction of the arrow (B).

To lower the fork carriage:

– Move the "lift mast" 360° lever (3) in the direction of the arrow (A).

## Tilting the lift mast

To tilt the lift mast forwards:

– Move the "lift mast" 360° lever (4) in the direction of the arrow (C).

To tilt the lift mast backwards:

– Move the "lift mast" 360° lever (4) in the direction of the arrow (D).

## Movements of the lifting system and meanings of the pictograms

A Lowering
B Lifting
C Tilting forwards
D Tilting backwards

## Controlling the lifting system using a quadruple mini-lever ▷

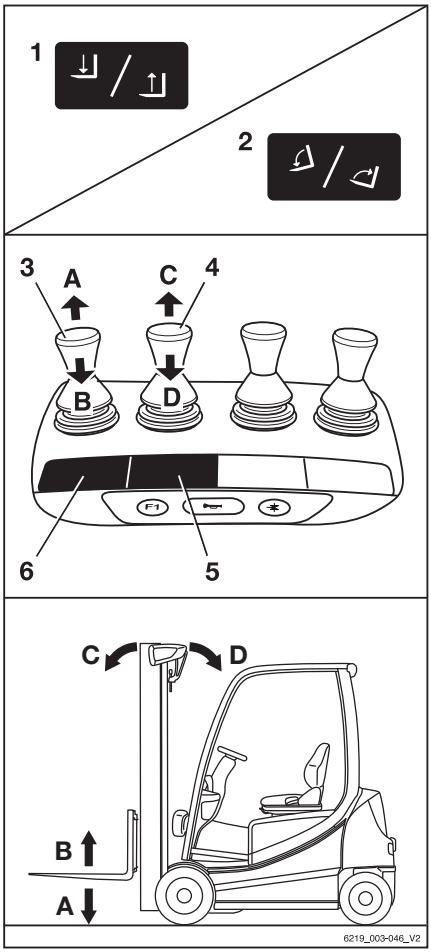


**⚠ DANGER**

**Reaching into or climbing between moving parts of the truck (e.g. lift mast, sideshifts, working equipment, load carrying devices etc.) can lead to serious injury or death and is therefore prohibited.**

– Observe the safety regulations for handling loads.
– Operate the lifting system from the driver's seat only.

**⚠ WARNING**

Risk of accident as a result of an operating error!

These operating instructions describe how to operate the lifting system in the factory configuration.

If the authorised service centre has configured a different configuration, the newly applied pictograms must be observed to ensure safe operation. The operating company must make all drivers aware of the fact that a different configuration has been configured.

– Observe the pictograms on the operating levers.
– Before use, check that the hydraulic functions are working correctly.

The lifting and lowering movements of the lift mast are controlled using the "lift-lower" operating lever (3). The adhesive label bearing the corresponding pictograms (1) is affixed at the designated point (6).

The tilting movement of the lift mast is controlled using the "tilting" operating lever (4). The adhesive label bearing the corresponding pictograms (2) is affixed at the designated point (5).

The pictograms are arranged according to the directions of movement of the operating lever (3) or (4).

### Lifting/lowering the fork carriage

To lift the fork carriage:

– Move the "lifting/lowering" operating lever (3) in the direction of the arrow (B).

To lower the fork carriage:

– Move the "lifting/lowering" operating lever (3) in the direction of the arrow (A).

## Tilting the lift mast

To tilt the lift mast forwards:

– Move the "lift mast" operating lever (4) in the direction of the arrow (C).

To tilt the lift mast backwards:

– Move the "lift mast" operating lever (4) in the direction of the arrow (D).

## Movements of the lifting system and meanings of the pictograms

A Lowering
B Lifting
C Tilting forwards
D Tilting backwards

## Controlling the lifting system using the Fingertip ▷

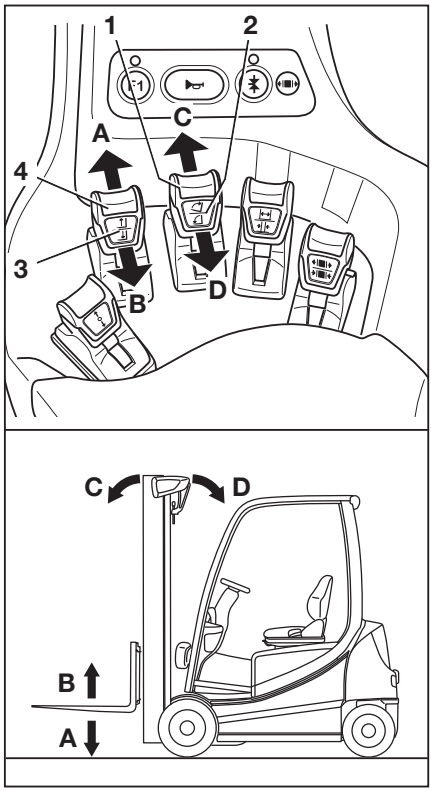


**⚠ DANGER**

**Reaching into or climbing between moving parts of the truck (e.g. lift mast, sideshifts, working equipment, load carrying devices etc.) can lead to serious injury or death and is therefore prohibited.**

– Observe the safety regulations for handling loads.
– Operate the lifting system from the driver's seat only.

**⚠ WARNING**

Risk of accident as a result of an operating error!

These operating instructions describe how to operate the lifting system in the factory configuration.

If the authorised service centre has configured a different configuration, the newly applied pictograms must be observed to ensure safe operation. The operating company must make all drivers aware of the fact that a different configuration has been configured.

– Observe the pictograms on the operating levers.
– Before use, check that the hydraulic functions are working correctly.

The lifting and lowering movements of the lift mast are controlled using the "lift-lower" operating lever (4). The adhesive label with the corresponding pictogram (3) is located on the operating lever.

The tilting movement of the lift mast is controlled using the "tilting" operating lever (1). The adhesive label with the corresponding pictogram (2) is located on the operating lever.

The pictograms are arranged according to the directions of movement of the operating lever (4) or (1).

### Lifting/lowering the fork carriage

To lift the fork carriage:

– Move the "lifting/lowering" operating lever (4) in the direction of the arrow (B).

To lower the fork carriage:

– Move the "lifting/lowering" operating lever (4) in the direction of the arrow (A).

### Tilting the lift mast

To tilt the lift mast forwards:

– Move the "tilting" operating lever (1) in the direction of the arrow (C).

To tilt the lift mast backwards:

– Move the "tilting" operating lever (1) in the direction of the arrow (D).

### Movements of the lifting system and meanings of the pictograms

A Lowering
B Lifting
C Tilting forwards
D Tilting backwards

## Controlling the lifting system using the Joystick 4Plus

**⚠ DANGER**

**Reaching into or climbing between moving parts of the truck (e.g. lift mast, sideshifts, working equipment, load carrying devices etc.) can lead to serious injury or death and is therefore prohibited.**

– Observe the safety regulations for handling loads.

– Operate the lifting system from the driver's seat only.

**⚠ WARNING**

Risk of accident as a result of an operating error!

These operating instructions describe how to operate the lifting system in the factory configuration.

If the authorised service centre has configured a different configuration, the newly applied pictograms must be observed to ensure safe operation. The operating company must make all drivers aware of the fact that a different configuration has been configured.

– Observe the pictograms on the operating levers.

– Before use, check that the hydraulic functions are working correctly.

The lifting, lowering and tilting movements of the lift mast are controlled using the Joystick 4Plus (1). The adhesive labels bearing the pictograms for the hydraulic functions are located in positions (2) and (4).

The pictograms are arranged according to the directions of movement of the Joystick 4Plus (1) and the horizontal rocker button (3).

## Lifting/lowering the fork carriage

To lift the fork carriage:

– Pull the Joystick 4Plus (1) backwards (B).

To lower the fork carriage:

– Push the Joystick 4Plus (1) forwards (A).

▷

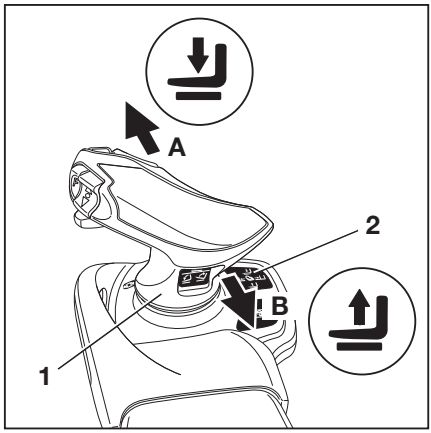


## Tilting the lift mast

To tilt the lift mast forwards:

– Tilt the horizontal rocker button (3) to the left (C).

To tilt the lift mast backwards:

– Tilt the horizontal rocker button (3) to the right (D).

▷

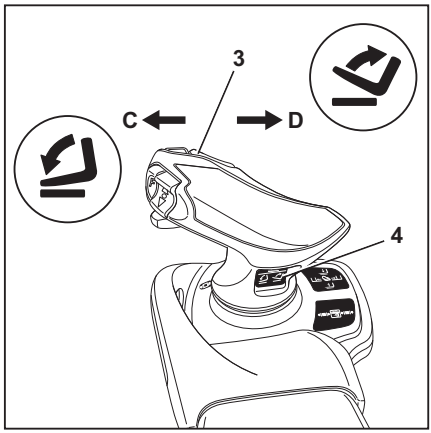

### Fork carriage sideshift

To move the fork carriage to the left:

– Push the Joystick 4Plus (1) to the left (E).

To move the fork carriage to the right:

– Push the Joystick 4Plus (1) to the right (F).

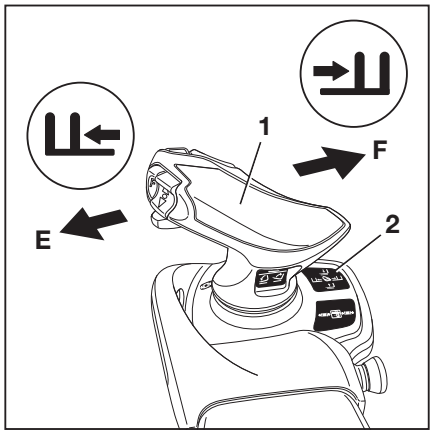


### Movements of the lifting system and meanings of the pictograms

A Lowering
B Lifting
C Tilting forwards
D Tilting backwards
E Side shift left
F Side shift right

## Dynamics of the hydraulic movements

**⚠ WARNING**

Risk of injury due to delayed response from the truck!

If the lifting movements are configured to use low dynamics, the lifting system responds after a delay when the operating device is released, even in an emergency. The fork carriage does not stop immediately upon release. It only stops after approximately one second. This behaviour may also occur when specific settings are configured for the Dynamic Load Control 1 & 2 assistance systems.

– Work with particular attention and care.

The authorised service centre can reduce the dynamics of the hydraulic movements to adapt the hydraulic movements to the application requirements. The hydraulic system movement will then respond more slowly to the actuation of the operating device.

Maximum dynamics are suitable for applications that require the load pick up system to respond quickly and directly. Minimum dynamics are suitable for applications that involve, for example, the movement of fragile goods during which impacts must be avoided.

**Maximum dynamics** (standard setting)

- The hydraulic movement immediately follows the actuation of the operating device.
- When the operating device is released, the hydraulic movement decelerates very quickly.
  The fork carriage quickly comes to a standstill.

**Minimum dynamics**

- The hydraulic movement accelerates very slowly when actuating the operating device.
- The hydraulic movement follows the actuation of the operating device very slowly.
- When the operating device is released, the hydraulic movement only decelerates slowly.
  The fork carriage therefore continues to run for some time before the movement comes to a standstill.

## Selecting load programs 1 to 3 ▷

The truck has three load programs for the different lifting behaviours of the fork carriage and the lift mast. The higher the number of the load program selected, the greater the load dynamics.

**Differences between the load programs**

- 1 Load program 1:
  66% lifting speed
- 2 Load program 2:
  85% lifting speed
- 3 Load program 3:
  100% lifting speed

The lifting behaviour of the truck is selected via the display-operating unit under the menu item.

– Press the 1... softkey to select the desired load program. 3 .

– If the load programs are saved as a favourite on a softkey, press the softkey until the number of the desired load program is shown on the display. ▷

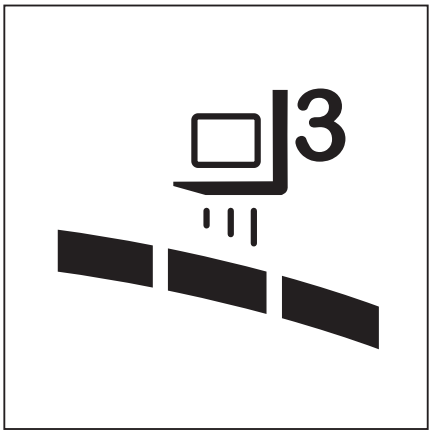


The number of dynamic bar segments shows the load dynamics of the selected load program.

Limiting the load dynamics to load program 1 during the warm-up phase ▷

NOTE

*During the warm-up phase, the load dynamics are limited to load program 1. The adjacent symbol appears on the display until the warm-up phase is complete.*

– Refer to the section entitled "Warming up the hydraulic oil at cold ambient temperatures" in the chapter entitled "Operation — Checks and tasks before daily use."

## Fork wear protection (variant)

The "fork wear protection" variant ensures that the fork arms do not touch the ground. The fork arms are protected against wear and the building floor is protected against damage.

There are two types of fork wear protection:

- Fork wear protection (mechanical)
  This variant is described here.
- Electrical fork wear protection
  The fleet manager can configure this variant. See the section "Electrical fork wear

protection (variant)" in the chapter entitled "Lift height-dependent assistance systems".

The lift cylinders have in-built fixed stops to prevent the fork arms from hitting the ground. The lower stop makes inserting the forks into a pallet more comfortable.

The driver cannot adjust the fork wear protection manually. However, the fork wear protection must be continually adjusted as the wear on the front tyres increases.

– Contact the authorised service centre on this matter.

## Changing the fork arms

**⚠ DANGER**

**There is a risk of fatal injury from being run over if the truck rolls away.**

– Do not park the truck on a gradient.
– Apply the parking brake.
– Change the fork extension in a cordoned-off, safe location on a level surface.

**⚠ WARNING**

There is a risk of injury when changing the fork arms; the weight of the fork arms could cause them to fall on your legs, feet or knees.

The space to the left and right of the fork is a danger area.

– Wear protective gloves and safety shoes when changing the fork arms.
– Ensure that no one stands in the danger area!
– Do not pull on the fork arms.
– The fork arms must always be carried by two people; if necessary, use a hoist.

NOTE

- *It is recommended that a transport pallet is used to supporting the fork arms when they are being installed or removed. The pallet size depends on the size of fork arms in use. It should be large enough that the fork arms do not protrude after being placed on the pallet. This means the fork arms can be safely placed down and transported.*
- *Both fork arms can be pushed over onto one side.*

## Removing

▷

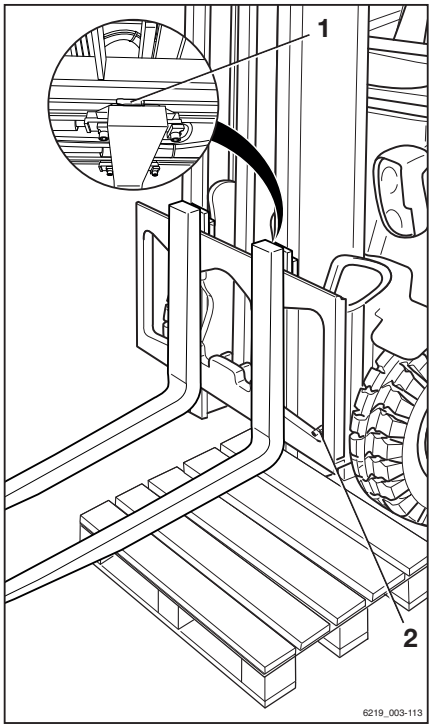


– Select the pallet according to the size of the fork arms.

– Position the pallet to the left or right of the fork carriage.

– Raise the fork carriage until the lower edges of the fork arms are approx. 3 cm higher than the height of the pallet.

– Actuate the parking brake and make sure it is applied securely.

– Turn the switch key to the left and pull it out.

– Undo the locking screw (2) on the right or left.

– Pull the locking lever (1) upwards and push the fork arms outwards onto the pallet.

## Installing

– Position the fork arms on a pallet to the left or right of the fork carriage.

– Push the fork arms onto the fork carriage from the outside towards the centre.

– Pull the locking lever (1) upwards and push the fork arms into the required position. Ensure that the locking lever snaps into place.

– Fit and tighten the locking screw (2).

**⚠ DANGER**

**There is a risk of fatal injury from a falling load or fork!**

- Tighten the locking screw (2) each time a fork is changed.
- It is not permitted to drive or to transport loads without the locking screw in place.

**NOTE**

*If the truck is equipped with the "load measurement" assistance system (variant), the "tare" function must always be run after the fork arms have been changed. Otherwise, correct load measurement cannot be guaranteed.*

## Fork extension (variant)

**⚠ DANGER**

**There is a risk of fatal injury from being run over if the truck rolls away.**

- Do not park the truck on a gradient.
- Apply the parking brake.
- Change the fork extension in a cordoned-off, safe location on a level surface.

**⚠ WARNING**

There is a risk of injury!

There is a risk of crushing due to the weight of the fork extension. There is a risk of cutting on sharp edges or burrs.

- Wear protective gloves and safety shoes.

**⚠ WARNING**

There is a risk of tipping!

The weight and dimensions of the fork extension affect the stability of the truck. The permissible weights stated on the capacity rating plate must be reduced in proportion to the actual load distance.

If the truck is equipped with a fork extension ex works, then the capacity rating plate will already have been adjusted accordingly.

- Observe the load capacity; see the section entitled "Capacity rating plate" in the chapter entitled "Handling loads".

NOTE

*If the truck is equipped with the "load measurement" assistance system (variant), the "tare" function must always be run after the fork arms have been changed. Otherwise, correct load measurement cannot be guaranteed.*

## Attaching

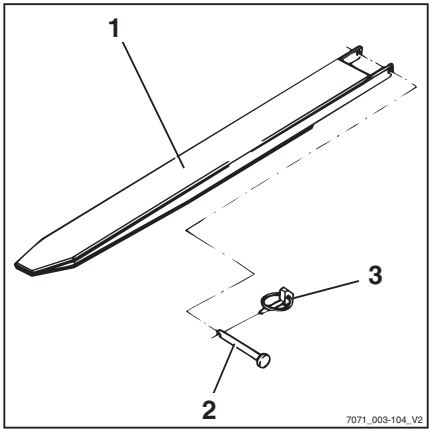


**DANGER**

**Risk of fatal injury from falling load!**

At least 60% of the length of the fork extension must lie on the fork arm. No more than 40% of the length of the fork extension may overhang the end of the fork arms. In addition, the fork extension must be secured against slipping from the fork arm.

If the fork extension (1) is not secured with a securing bolt (2) and linch pin (3), the load may fall, along with the fork extension.

- Push the fork extension all the way to the back of the fork.
- Make sure that 60% of the length of the fork extension is on the fork arm.
- Always secure the fork extension with the securing bolt.
- Always secure the securing bolt with the linch pin.

- Remove the linch pin (3) from the securing bolt (2).
- Remove the securing bolt from the fork extension (1).
- Push the fork extension onto the fork arms until the fork extension is flush with the fork back.
- Insert the securing bolt located behind the fork back fully into the fork extension.
- Insert the linch pin into the securing bolt and secure.

## Detaching

- Remove the linch pin (3) from the securing bolt (2).
- Remove the securing bolt from the fork extension (1).
- Pull the fork extension off the fork arms.

– Insert the securing bolt fully into the fork extension.

– Insert the linch pin into the securing bolt and secure.

## Operation with reversible fork arms (variant)

Reversible fork arms (1) can be used to reach an additional lift height. The reversible fork arms are attached to the fork carriage in the same manner as standard fork arms. Loads may be lifted on and suspended under the reversible fork arms. The lift mast can be tilted forwards and backwards as usual. ▷

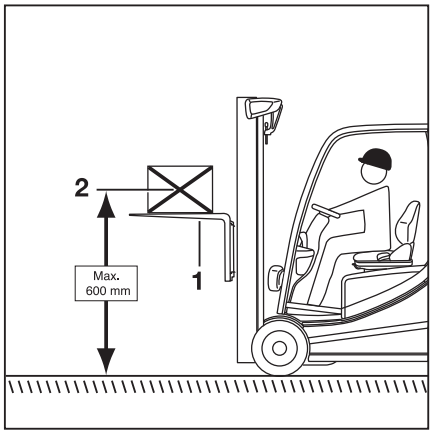


**⚠ DANGER**

**Risk of fatal injury from falling load!**

Standard fork arms are not suitable for inverted operation due to their design. If standard fork arms are used inverted, they may break.

– Use only special reversible fork arms (1) if the fork arms are used inverted for a higher lift height!

**⚠ WARNING**

Risk of accident from slipping load!

Loads may slip on the reversible fork arms if there is no load support. A fork extension (variant) cannot be secured against slipping.

– Do **not** use a fork extension (variant) with reversible fork arms.

**⚠ WARNING**

Risk of accident from the truck tipping over.

When the truck is travelling, the centre of gravity of the load (2) must not be more than 600 mm above the ground. The truck may tip forwards during driving or braking.

– Drive only with a load centre of gravity up to a max. of 600 mm above the ground.

NOTE

*If the truck has the "load measurement" assistance system (variant), carry out a "tare" after switching to the reversible fork arms. Otherwise, correct load measurement cannot be guaranteed.*

– If fork arms are used inverted for a higher lift height, use only reversible fork arms.

– Do not use a fork extension (variant).

– If the "load measurement" assistance system (variant) is fitted, run the "tare" function.

– To drive, raise the load centre of gravity (2) to a max. of 600 mm above the ground.

– If a load is transported suspended under the reversible fork arms, also observe the section entitled "Transporting suspended loads".

## Malfunctions during lifting mode

### Incorrect extension sequence

DANGER

**Risk of accidents!**

In the case of Hi-Lo lift masts (variant) and triplex lift masts (variant), an incorrect extension sequence may occur, i.e. the inner lift mast may extend before the free lift is complete. As a result, the overall height is exceeded and damage may occur in passageways or from low ceilings.

An incorrect extension sequence may, for instance, result from:

- The hydraulic oil temperature being too low.
- Blocking of the fork carriage in the inner lift mast.
- Blocking of the free lift cylinder.
- Blocking of the chain roller on the free lift cylinder.

– If the hydraulic oil temperature is too low, slowly actuate the lift mast functions several times in order to raise the oil temperature.

In the event that the fork carriage is blocked in the inner lift mast, or the free lift cylinder or chain roller are blocked, the cause of the

blockage must be eliminated before resuming work.

– Notify your service centre

### Load chains not under tension

**⚠ DANGER**

**Danger caused by a falling load!**

– Make sure that the chain(s) does (do) not become slack when lowering the load.

Slack chains can, for instance, result from:

- Resting the fork carriage or the load on the racking.
- Fork carriage rollers blocking in the lift mast due to contamination.

– If the fork carriage or the load comes to an unexpected stop, lift the fork carriage until the chains are under tension again and lower the load at another suitable location.

– If the fork carriage rollers in the lift mast become blocked due to contamination, lift the fork carriage until the chains are under tension again. Remove the contamination before resuming work.

**⚠ WARNING**

Risk of injury!

– Observe the safety regulations for working on the lift mast, see the chapter entitled "Working at the front of the truck".

## Hydraulic blocking function

The hydraulic blocking function ensures that all the functions of the working hydraulics are disabled whenever the seat switch in the driver's seat is unloaded.

If the driver's seat is vacated, the blocking function prevents hydraulic operation for the following functions:

- Lift the load
- Lower the load
- Tilt the lift mast
- Auxiliary hydraulic functions
- Steering

NOTE

*Only the emergency steering function remains available.*

# Handling loads

## Safety regulations when handing loads ▷

The safety regulations for handling loads are shown in the following sections.

**⚠ DANGER**

**There is a risk to life caused by falling loads or if parts of the truck are being lowered.**

- Never walk or stand underneath suspended loads or raised fork arms.
- Never exceed the maximum load indicated on the capacity rating plate. Otherwise stability cannot be guaranteed!

**⚠ DANGER**

**Risk of accident from falling or crushing!**

- Do not step onto the forks.
- Do not lift people.
- Never grab or climb on moving parts of the truck.

**⚠ DANGER**

**Risk of accident from a falling load!**

- When transporting small items, attach a load safety guard (variant) to prevent the load from falling on the driver.
- Use a closed roof covering (variant) in addition.

## Capacity rating plate

The load capacity indicated for the truck on the capacity rating plate must not be exceeded. The load capacity is influenced by the load centre of gravity, the lift height, the attachment or fork arms used and the tyres.

- The position of the capacity rating plate can be taken from the "labelling points".

**⚠ DANGER**

**Risk of fatal injury from the truck losing stability!**

Never exceed the load capacity indicated on the capacity rating plate. This applies to compact and homogeneous loads. If these values are exceeded, the stability and rigidity of the fork arms and lift mast cannot be guaranteed.

Improper or incorrect operation or the placement of persons to increase load capacity is prohibited.

The attachment of additional weights to increase the load capacity is prohibited.

**⚠ DANGER**

**Risk of death due to misinterpretation of the capacity rating plate!**

Only the capacity rating plates on the truck are valid.

The figures show examples.

– Only observe the capacity rating plate on the truck.

**⚠ DANGER**

**Risk of fatal injury from the truck losing stability!**

If the permissible loading of the attachments (variant) and the reduced load capacity of the truck and attachment combination is exceeded, there is a risk of loss of stability.

– The permissible loading of the attachments (variant) and the reduced load capacity of the combination of truck and attachment must not be exceeded.
– Observe the information given on the special capacity rating plates on the truck and attachment.

## Basic capacity rating plate

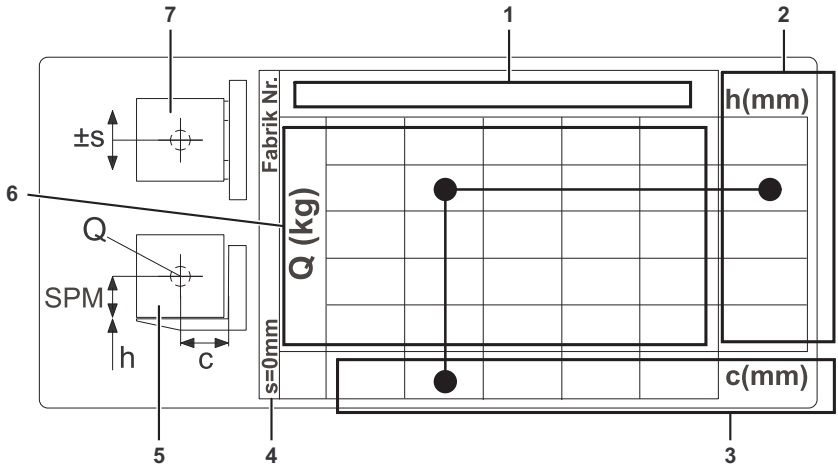


**Basic capacity rating plate**

1 Designation of the lifting accessories (fork arms or attachment)
2 Lift height "h" [mm]
3 Distance "c" to load centre of gravity from fork back [mm]
4 Sideshift "s" [mm]
5 Side view of load and lifting accessories
6 Load capacity [kg]
7 Top view of load and lifting accessories

There is always at least one capacity rating plate on the truck: the basic capacity rating plate. It shows the load capacity only for fork arms without the attachment. If an attachment is attached, a second capacity rating plate is fitted: the residual load capacity rating plate. This plate shows the load capacity taking the attachment into account. In the case of integrated attachments, only a basic capacity rating plate is created as the integrated devices cannot be easily removed from the truck.

## Typical application of a capacity rating plate

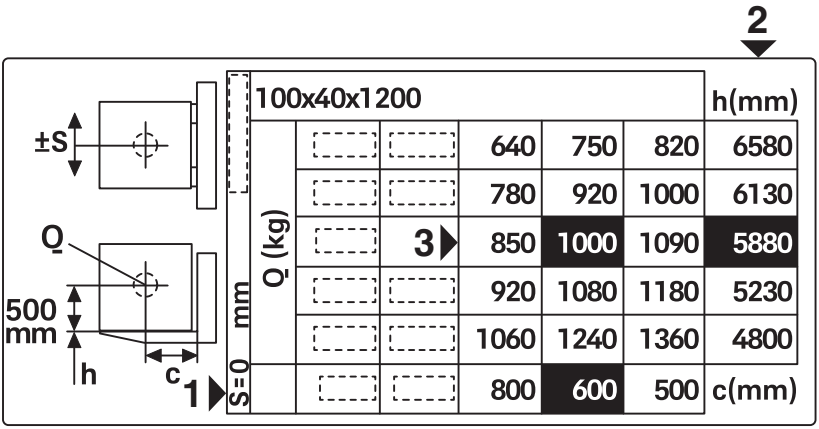


| 100x40x1200 | | | | | h(mm) |
|---|---|---|---|---|---|
| | | 640 | 750 | 820 | 6580 |
| | | 780 | 920 | 1000 | 6130 |
| | | 850 | 1000 | 1090 | 5880 |
| | | 920 | 1080 | 1180 | 5230 |
| | | 1060 | 1240 | 1360 | 4800 |
| | | 800 | 600 | 500 | c(mm) |

The **example values** used here are **marked in black**.

– To determine the actual load capacity, observe the basic capacity rating plate on the truck.

### Illustration of the typical application on the truck

The position numbers in the adjacent graphic correspond to the position numbers on the basic capacity rating plate.

1 Distance between the load centre of gravity and the fork back: 600 mm
2 Permissible lift height: 5880 mm
3 Weight of load to be lifted: 1000 kg

The distance between the load centre of gravity and the fork back is 600 mm (1). The lift height should be 5880 mm (2).

This means that the load must not exceed 1000 kg (3) (load capacity).

By implication, this means that, in this example with the distance between the load centre of gravity and the fork back being 600 mm, a 1000-kg load must not be lifted higher than 5880 mm.

The load capacity specified for certain nominal lifts applies up to this nominal lift. If the lift value of the first line is exceeded, the load capacity from the second line applies up to the lift of the second line.

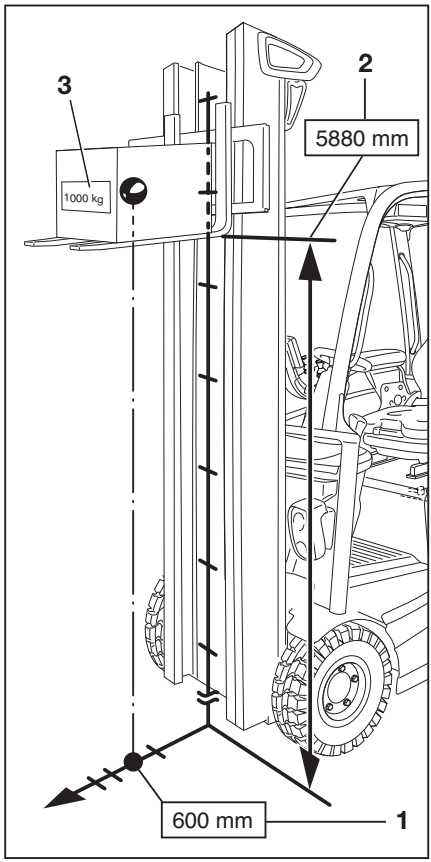


## Residual load capacity rating plate for built-in devices and attachments

**NOTE**

*The residual load capacity rating plate for attachments is read according to the same diagram as in the example for the basic capacity rating plate.*

Some attachments have a standard sideshift or a large sideshift. As a rule, the standard sideshift is ±100 mm and the large sideshift is 230 mm.

In contrast to the large sideshift, the standard sideshift offers a higher load capacity, but only within the scope of the specified standard sideshift.

A large sideshift enables a strongly off-centre load position. If the load is severely off-centre, the load capacity of the truck will be greatly reduced.

Since non-integrated attachments can be replaced, multiple residual load capacity rating plates for attachments on one truck are possible. The residual load capacity rating plate then applies to the attachment fitted. In the case of integrated attachments, only the applicable capacity rating plate is fitted to the truck.

– If there is a built-in device or attachment with a large sideshift on the truck, take into account the maximum possible sideshift on the capacity rating plate.

▷

| S=230mm | XZP150+100x40x1200 | | | | h(mm) |
|---|---|---|---|---|---|
| Q (kg) | | 220 | 260 | 290 | 6580 |
| | | 430 | 510 | 560 | 5870 |
| | | 500 | 590 | 650 | 5230 |
| | | 570 | 670 | 740 | 4750 |
| | | 780 | 920 | 1000 | 4100 |
| | | 800 | 600 | 500 | c(mm) |

Residual load capacity rating plate for large sideshift, S = 230 mm

A second residual load capacity rating plate for the same attachment but with standard sideshift (usually ±100 mm) may also be fitted on the truck. This residual load capacity rating plate offers a higher load capacity, but only within the scope of the specified standard sideshift. If the standard sideshift is exceeded, the residual load capacity rating plate applies to the maximum possible sideshift. The driver is responsible for complying with the

load capacity and sideshift information on the residual load capacity rating plate. If in doubt, use the load capacity for the maximum possible sideshift.

▷

| S=100mm | XZP150+100x40x1200 | | | | h(mm) |
|---|---|---|---|---|---|
| Q (kg) | | 430 | 510 | 560 | 6580 |
| | | 570 | 670 | 740 | 6130 |
| | | 640 | 750 | 820 | 5880 |
| | | 710 | 840 | 880 | 5230 |
| | | 850 | 1000 | 1090 | 4800 |
| | | 800 | 600 | 500 | c(mm) |

Residual load capacity rating plate for standard sideshift, S = 100 mm

### Special capacity rating plate for off-centre loads

If unbalanced loads are regularly transported, a special capacity rating plate for off-centre loads is required. If this plate is required at a later date, contact the authorised service centre. This requires information on the type and appearance of the load.

## Picking up loads

To make sure that the load is securely supported, it must be ensured that the fork arms are

sufficiently far apart and are positioned as far as possible under the load.

If possible, the load should rest on the back of the fork.

The load must not protrude too far over the fork tips, nor should the fork tips protrude too far out from the load.

Loads are to be picked up and transported as close to the middle as possible.

**⚠ DANGER**

**Risk of accident from a falling load!**

When transporting small items, attach a load safety guard (variant) to prevent the load from falling on the driver.

A closed roof covering (variant) should also be used.

Removable roof panels may not be removed.

## Adjusting the fork

▷

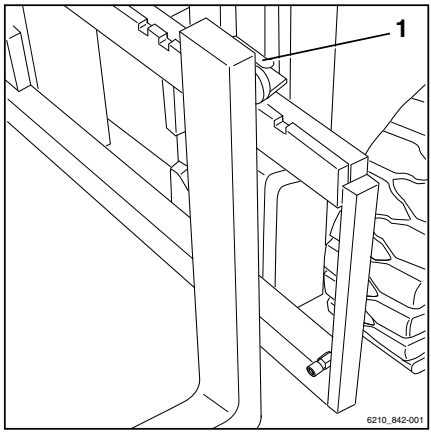


– Lift the locking lever (1) and move the fork arms to the desired position.

– Allow the locking lever to snap back into place.

The load centre of gravity must be midway between the fork arms.

– Only actuate the fork prong positioner (variant) when the fork is not carrying a load.

# Danger area

The danger area is the area in which people are at risk due to the movements of the truck, its working equipment, its load-carrying equipment (e.g. attachments) or the load. Also included are the areas where loads could fall or working equipment could fall or be lowered.

**⚠ DANGER**

**Risk of injury!**

– Do not step on the fork.

**⚠ DANGER**

**Risk of injury!**

– Do not step under the raised forks.

**⚠ DANGER**

**People may be injured in the danger area of the truck!**

The danger area of the truck must be completely clear of all personnel, except the driver in his normal operating position. If persons fail to leave the danger area despite warnings:

– Cease work with the truck immediately.

– Secure the truck against use by unauthorised parties.

**⚠ DANGER**

**Danger of death from falling loads!**

– Never walk or stand underneath suspended loads.

## Transporting pallets

As a rule, loads (e.g. pallets) must be transported individually. Transporting multiple loads at the same time is only permitted:

- when instructed by the supervisor and
- when the technical requirements have been met.

The driver must ensure proper condition of the load. Only safely and carefully positioned loads may be transported.

▷

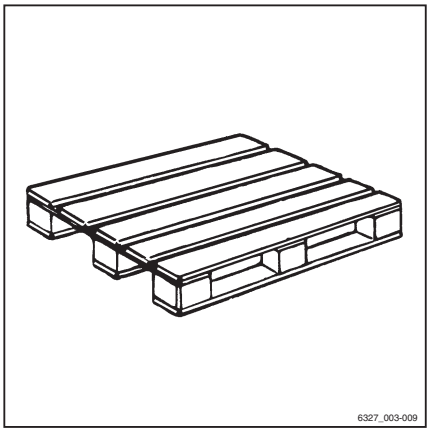

## Transporting suspended loads ▷

Before transporting suspended loads, consult the national regulatory authorities (in Germany, the employer's liability insurance associations).

National regulations may place restrictions on these operations, e.g. in Italy.

– Contact the relevant authorities.

– Follow the national regulations for the country in which the truck is being used.

If there are no country-specific regulations for suspended loads in the country of use, observe the following instructions for safe handling.

**⚠ DANGER**

**Risk of accident due to transporting suspended loads!**

Suspended loads can begin to swing. Suspended loads that begin to swing can result in the following risks.

– Follow the "Instructions for transporting suspended loads".

### Risks due to suspended loads

- Impaired braking characteristics and steering movement
- Tipping over the front axle
- Tipping the truck at right angles to the drive direction
- Risk of crushing of accompanying persons
- Reduced visibility

**⚠ DANGER**

**Loss of stability!**

Slipping or swinging suspended loads can lead to a loss of stability and cause the truck to tip over.

– Follow the "Instructions for transporting suspended loads".

### Instructions for transporting suspended loads

- Swinging loads must be prevented by using the proper driving speed and driving style (careful steering, braking).
- Hanging loads must be hooked on to the truck in such a way that the harness cannot

shift or release unintentionally and cannot be damaged.

- When transporting suspended loads, suitable aids (e.g. guy wires or supporting poles) must be available so that accompanying persons can guide suspended loads and prevent the loads from swinging.
- Take particular care to ensure that there is no one in the drive direction in the driving lane.
- If, despite this, the load begins to swing, ensure that no person is placed at risk.

**⚠ DANGER**

**Risk of accident due to transporting suspended loads!**

– When transporting suspended loads, never perform or end driving and load movements abruptly.

– Never drive on slopes with a suspended load.

– Transporting containers holding fluids as hanging loads is not permitted.

## Picking up a load

**⚠ DANGER**

**There is a risk to life from a falling load or from truck components being lowered.**

– Never walk or stand underneath suspended loads or raised fork arms.

– Never exceed the maximum load values specified on the capacity rating plate. Otherwise, stability cannot be guaranteed.

– Only store pallets that do not exceed the specified maximum size. Damaged loading equipment and incorrectly formed loads must not be stored.

– Attach or secure the load to the lifting accessory so that the load cannot move or fall.

– Store the load so that the specified aisle width is not reduced by protruding parts.

– Approach the rack carefully, brake gently and stop just in front of the rack.

▷

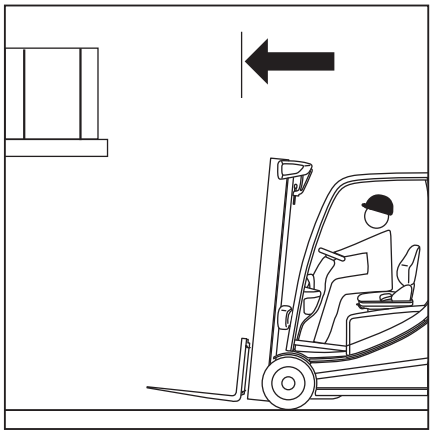

– Position the forks.
– Set the lift mast to vertical.
– Lift the fork carriage to the stacking height.

▷

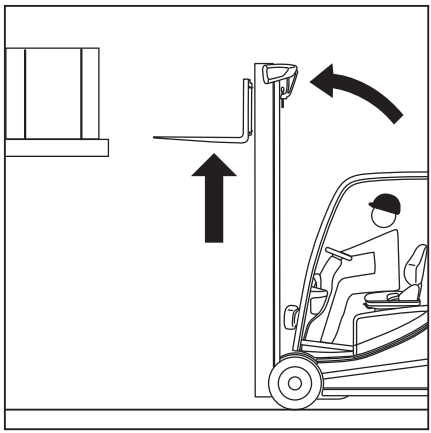

**⚠ CAUTION**

Risk of component damage!

When the fork is inserted into the rack, take care not to damage the rack or the load.

– Insert the fork as far under the load as possible. Stop the truck as soon as the fork back is resting on the load. The load centre of gravity must be midway between the fork arms. ▷

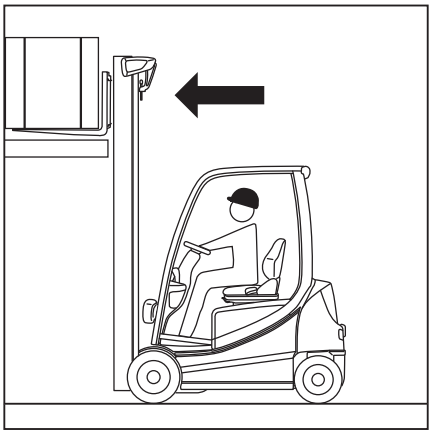

– Lift the fork carriage until the load is resting entirely on the fork. ▷

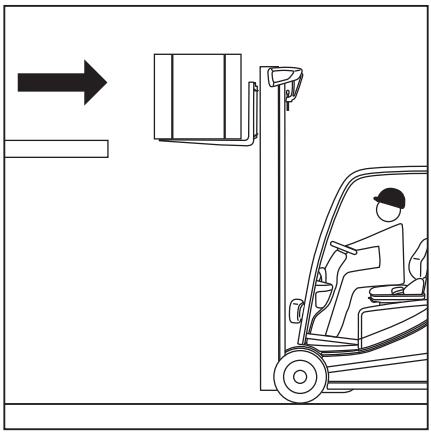

**⚠ DANGER**

**Risk of accident!**

– Beware of any people in the danger area.
– Ensure that the roadway behind you is clear.

**⚠ DANGER**

**Due to the risk of tipping, never tilt the lift mast with a raised load!**

– Lower the load before tilting the lift mast.

– Reverse carefully and slowly until the load is clear of the rack. Brake gently.

– Lower the load while maintaining ground clearance. ▷

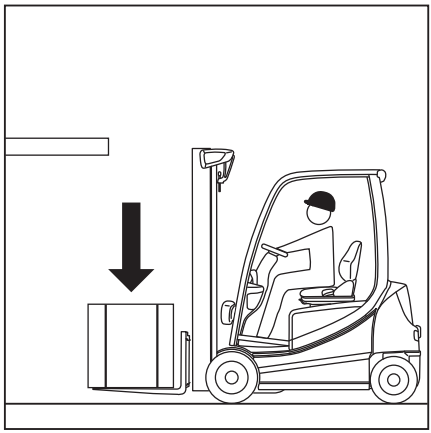

– Tilt the lift mast backwards. ▷

The load can be transported.

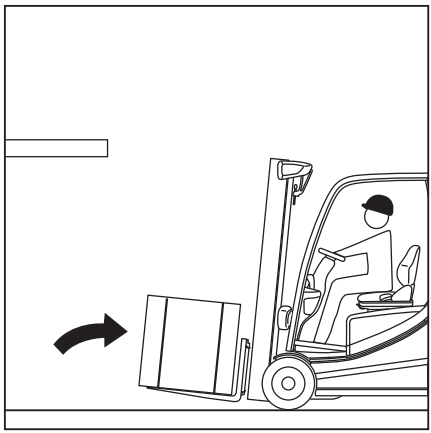

# Determining visibility conditions when driving with a load

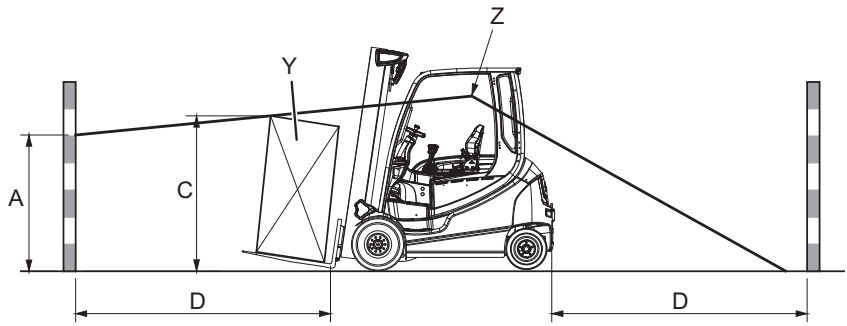


| | | | |
|---|---|---|---|
| A | Area that is not visible (max. 1085 mm) | Y | Load |
| C | Load height (in driving position) | Z | Driver's eye level |
| D | 4000 mm (distance to the front from the rear corner of the load when it is positioned on the fork carriage in the driving position) | | |

The driver's field of vision can be severely limited when driving with a larger load (Y) or with attachments fitted. In this case, safe operation is no longer guaranteed.

Visibility conditions can be evaluated by determining the size of the area that is not visible (A).

If the area that is not visible exceeds 1085 mm (EN16842-2/A3), the visibility conditions are inadequate.

Procedure:

– Sit down on the driver's seat and adopt the seat position.

– Determine the area that is not visible (A) using the load height (C) and the length of the route (D) = 4000 mm.

This area that is not visible (A) must not exceed 1085 mm.

– If the area that is not visible (A) exceeds 1085 mm, take one of the following measures:

- Drive backwards.
- Divide the loads so that the load height (C) is reduced and the area that is not visible (A) becomes smaller than 1085 mm.

## Transporting loads

NOTE

*Observe the information in the chapter entitled "Safety regulations when driving".*

**DANGER**

**The higher a load is lifted, the less stable it becomes. The truck can tip over. The load can fall. There is an increased risk of accidents.**

Driving with a raised load and the lift mast tilted forward is not permitted.

- Only drive with the load lowered.
- Lower the load until ground clearance is reached (not over 300 mm).
- Only drive with the lift mast tilted backwards.

- Drive slowly and carefully around corners.

NOTE

*Observe the information in the chapter entitled "Steering".*

- Always accelerate and brake gently.

NOTE

*Observe the information in the chapter entitled "Operating the service brake".*

– Never drive with a load protruding to the side (e.g. with the sideshift)! ▷

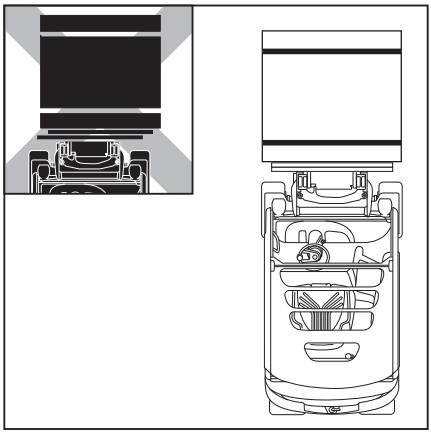

## Shake function (variant)

NOTE

*The shake function is intended only for short-term use, as it reduces the service life of the load chains due to the increased loading on them.*

### Description

The shake function of the hydraulics makes it easier for the driver to perform tasks such as emptying containers of bulk material. The shake function moves the fork carriage quickly up and down via the "Lifting" function.

This function may only be used for a limited load and must not be used with a full nominal load.

**Maximum permissible load for the shake function:**

- Maximum 30% of the nominal load. If an attachment is being used, its weight must be subtracted from this value.

NOTE

*The weight of an attachment can be seen on its nameplate.*

## Operation

To activate the shake function:

– Move the corresponding operating device for the "Lifting" function over the zero position four times in quick succession.

The fork carriage moves as normal. The shake function is active after the fourth time the operating device is moved.

– Continue to move the operating device back and forth.

The fork carriage moves up and down more quickly and more jerkily.

The intensity of the shaking is controlled via the vigour with which the operating device is moved. The more vigorously and frequently the operating device is moved, the more intense the shaking is.

**NOTE**

*Once the function has been activated, the driver has two seconds to start the shaking. If two seconds elapse without the shake function being used, the shake function is deactivated again.*

**WARNING**

The shake function remains active for two seconds following activation.

If the driver simply wants to lift or lower the load during this time, note that the fork carriage may move significantly more jerkily with the load than in normal operation. If the two seconds elapse without the shake function being used, the fork carriage can be moved normally again with the load.

**⚠ WARNING**

Risk of accident due to unintentional switch-off of the intermediate lift cut-out.

If the truck is also equipped with the "intermediate lift cut-out" variant and the shake function is performed close to an intermediate lift cut-out lift limit, this may inadvertently cancel the lift limit.

This can happen if the operating device has to be moved twice in order to cancel the lift limit. If the operating device for the shake function is then repeatedly actuated, this can cancel the lift limit. The fork carriage then moves beyond the lift limit during the shaking process. This can cause the fork carriage to collide with higher objects.

– Do not perform the **shake** function close to the lift height of a lift limit.
– Cancel the lift limit by pressing the "F button". See the note below.

**NOTE**

*The lift limit can be cancelled by pressing the "F button". See also the section entitled "Intermediate lift cut-out (variant)". For this option, contact the authorised service centre.*

The following section shows how the shake function is activated via the standard assignment for "lifting/lowering" using the different variants of the operating devices. If the "lifting/lowering" function is assigned differently on the operating device, the shake function is activated via this other assignment.

**Joystick 4Plus**:

– Move the Joystick 4Plus (1) back and forth between positions (A) and (B) four times. Then continue to move the component in the same way.

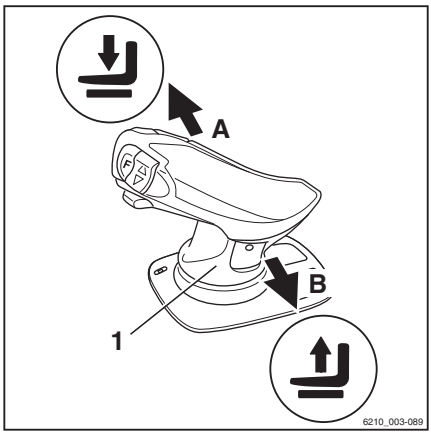

**Double mini-lever**:

– Move the 360° lever (2) back and forth between positions (A) and (B) four times. Then continue to move the component in the same way.

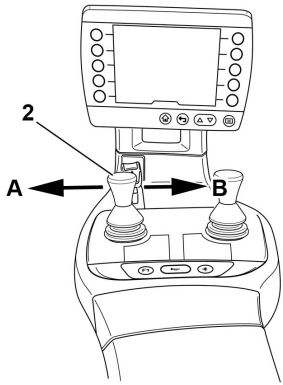


**Triple mini-lever**:

– Move the 360° lever (3) back and forth between positions (A) and (B) four times. Then continue to move the component in the same way.

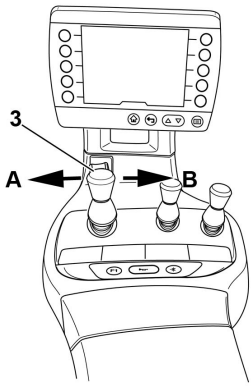


**Quadruple mini-lever**:

– Move the operating lever (4) back and forth between positions (A) and (B) four times. Then continue to move the component in the same way.

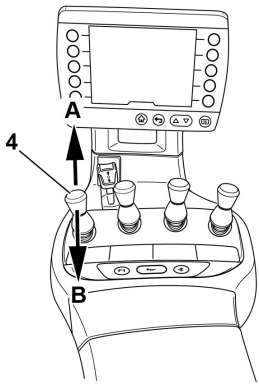

**Fingertip**: ▷

– Move the operating lever (5) back and forth four times. Then continue to move the component in the same way.

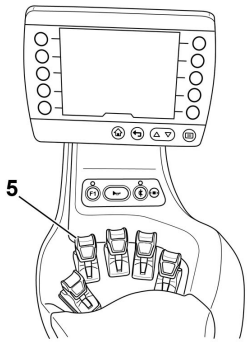


## Setting down a load

**⚠ DANGER**

**Risk of accident due to changed moment of tilt!**

The load centre of gravity and the moment of tilt move due to tilting the lift mast forwards with a raised load or due to the load slipping. The truck may tip forwards.

– Only tilt the lift mast forwards with a raised lifting accessory when it is directly above the stack.
– When the lift mast is tilted forwards, take particular care to ensure that the truck does not tip forwards and that the load does not slip.

**⚠ WARNING**

Risk of accident from falling load!

If the fork or the load remains suspended during lowering, the load may fall.

– When removing from stock, move the truck far enough back so that the load and the fork can be lowered freely.

– Drive up to the stack with the load lowered in accordance with regulations. ▷

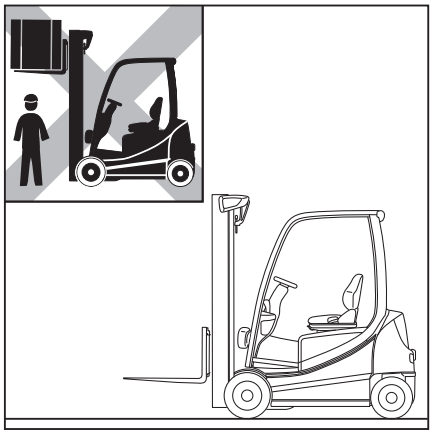

– Set the lift mast to vertical.
– Lift the load to the stacking height.
– Drive the truck towards the rack carefully.

– Lower the load until it rests securely on the rack. ▷

**⚠ DANGER**

**Risk of accident!**

– Beware of any people in the danger area.
– Ensure that the roadway behind you is clear.

– Move the truck back until the fork arms can be lowered without touching the stack.
– Lower the fork while maintaining ground clearance.
– Tilt the lift mast backwards and drive away.

## Driving on ascending and descending gradients

**DANGER**

**Risk of fatal injury!**

Driving on ascending and descending gradients carries special dangers!

– Always follow the instructions below.

– On ascending and descending gradients, the load must be carried facing uphill.
– It is only permitted to drive on ascending and descending gradients that are marked as traffic routes and that can be used safely.
– Ensure that the ground to be traversed is clean and provides a good grip.
– Do not turn on ascending and descending gradients.
– Do not drive onto or along ascending and descending gradients at an angle.
– Do not park the truck on ascending or descending gradients.
– In case of emergency, secure the truck with wedges so that the truck does not roll away.
– Reduce the driving speed on descending gradients.
– Do not drive downhill faster than the truck can drive uphill on the same incline.
– Determine the maximum permissible speed with a test drive uphill, if necessary.

It is not permitted to drive on long ascending and descending gradients greater than 15% due to the specified minimum braking and stability values.

– Before driving on ascending and descending gradients greater than 15%, consult the authorised service centre.

The process of placing loads into stock and removing loads from stock while on an ascending or descending gradient is not permitted!

– Always place loads into stock and remove loads from stock on a horizontal plane.

## Driving onto lifts

▷

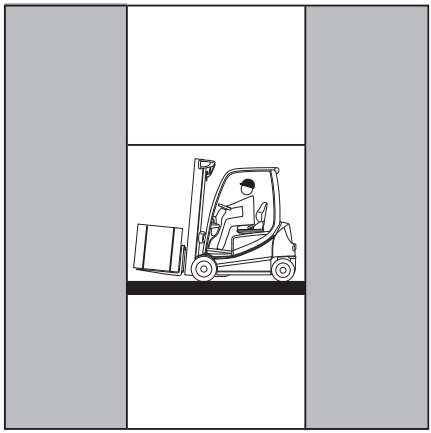

The driver may only use this truck on lifts with a sufficient load capacity and for which the operating company has been granted authorisation (refer to the section entitled "Definition of responsible persons").

**⚠ DANGER**

**There is a risk of fatal injury from being crushed or run over by the truck.**

– There must not be any persons already in the lift when the truck is driven into the lift.

– Persons are only permitted to enter the lift once the truck is secure, and must exit the lift before the truck is driven out.

## Determining the total actual weight

▷

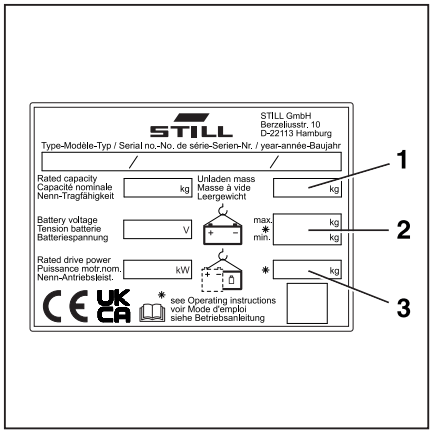


– Park the truck securely and switch it off.

– Determine the unit weights by reading the truck nameplate and, if necessary, the nameplate on the attachment (variant) and/or by weighing the load to be lifted.

– Add together the determined individual weights to obtain the total weight of the truck:

Net weight (1)
+ Max. permissible battery weight (2)
+ Ballast weight (variant) (3)
+ Net weight of attachment (variant)
+ Weight of the load to be lifted
+ 100 kg allowance for driver
= Total actual weight

– Drive the truck into the lift with the forks facing forwards. Make sure not to touch the shaft walls.

– Park the truck securely in the lift and switch it off to prevent uncontrolled movements of the load or the truck.

## Driving on loading bridges

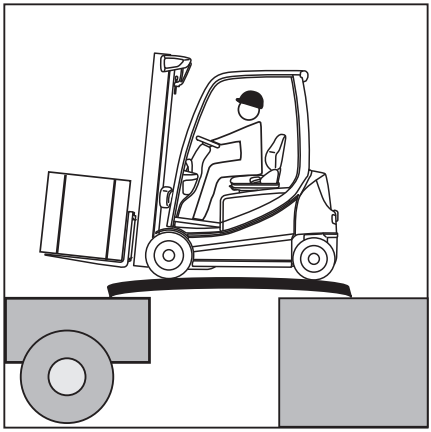

**⚠ DANGER**

**Risk of accident from the truck falling!**

Steering movements can cause the rear of the truck to veer off the loading bridge towards the edge. This may cause the truck to crash.

The lorry driver and the forklift truck driver must agree on the departure time of the lorry.

– Establish the departure time of the lorry.
– Determine the total actual weight of the truck.
– Before driving over a loading bridge, observe the operating instructions for the loading bridge.
– Make sure that the loading bridge is properly attached and secured and has a sufficient load capacity (e.g. lorry, bridge).
– Ensure that the lorry onto which you will be driving is secured to prevent it from shifting and that it can support the load of the truck.

## Determining the total actual weight

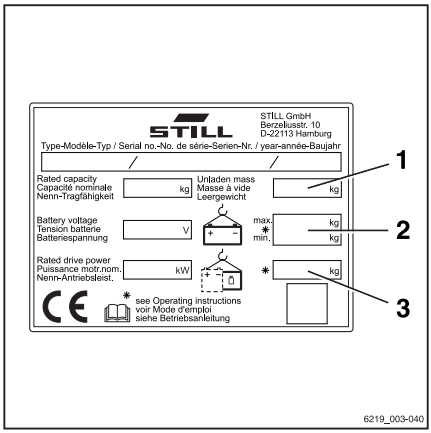


– Park the truck securely.
– Determine the unit weights by reading the truck nameplate and, if necessary, the nameplate on the attachment (variant) and/or by weighing the load to be lifted.
– Add together the determined unit weights to obtain the total actual weight of the truck:

Net weight (1)
\+ Max. permissible battery weight (2)
\+ Ballast weight (variant) (3)
\+ Net weight of attachment (variant)
\+ Weight of the load to be lifted
\+ 100 kg allowance for driver
= Total actual weight

– Drive slowly and carefully on the loading bridge.

# Lift height-dependent assistance systems

## Optical lift height measuring system (variant)

### Design and function

This truck can be fitted with an optical lift height measuring system as a variant. This system is a prerequisite for the assistance systems described in this chapter. As soon as the truck is switched on, the system is ready for use immediately. This system consists of an LED lift height sensor (2) on the side at the bottom of the lift mast and a reflector (1) on the fork carriage.

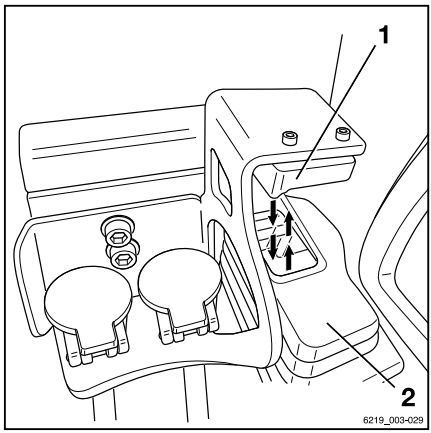


NOTE

*The LED/sensor unit and reflector are adjusted at the factory. Follow-up adjustments are carried out by the authorised service centre.*

The LED lift height sensor constantly emits a light signal that is reflected by the reflector. The truck control unit calculates the current lift height based on the travel time of the light signal.

NOTE

*Although the infrared light of the LED lift height sensor is not dangerous for the human eye, you should avoid looking directly into the light source.*

## Cleaning

It is recommended that the LED sensor glass (2) and the reflector (1) are checked before starting work and, if required, cleaned. The cleaning frequency depends on the application conditions of the truck. The quality of the light signal may also be reduced as a result of heavy rain or fogging up of the sensor.

If the light signal is too weak, the LED sensor glass (2) and the reflector (1) must be cleaned. Three dashes are shown on the display-operating unit instead of the lift height display.

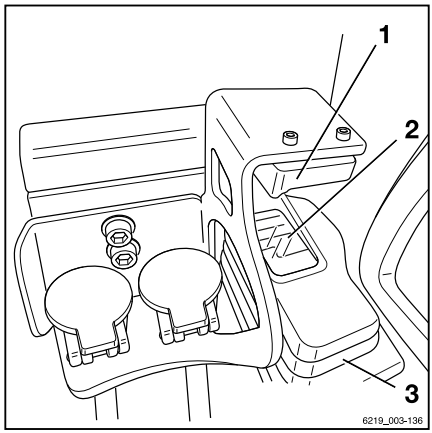


The message `Clean lift height sensor` appears in the display.

– Clean the sensor glass (2) and the reflector (1) using a soft cloth and water.

– Also clean the dust protection cover (3), if necessary.

A small amount of cleaning agent can be added to the water.

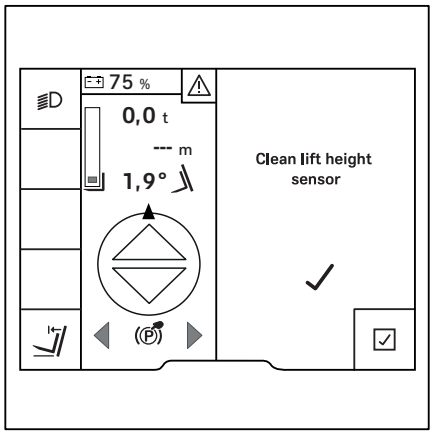


**⚠ CAUTION**

Component damage caused by incorrect cleaning.

The sensor glass and the reflector can be damaged as a result of incorrect cleaning procedures.

– The components must **not** be cleaned using dry materials.

– Do **not** use agents containing hydrocarbons.

Agents containing hydrocarbons include:

- Acetone
- Methanol
- Ethanol
- Propanol

**⚠ CAUTION**

Risk of damage to the LED lift height sensor through high-pressure cleaning!

A high-pressure cleaner can damage the LED lift height sensor due to the penetration of water. This can result in incorrect measurements.

– Do **not** direct the spray from a high-pressure cleaner at the LED lift height sensor.

## Eliminating malfunctions

**NOTE**

*A misaligned LED lift height sensor or bent reflector must be adjusted only by the authorised service centre.*

– If the malfunction in the system persists, please contact the authorised service centre.

If a malfunction occurs, the message `Check lift height sensor and reflector` appears in the display-operating unit. If the malfunction no longer exists or has been rectified, the system is automatically available again.

Truck functions that are dependent on the lift height are restricted in the event of a malfunction in the height measurement system. Malfunctions must therefore be rectified immediately.

### Contamination

The driver can resolve a temporary interruption of the light signal due to contamination or foreign objects in the signal path. See the section entitled "Cleaning".

### Condensation/icing

If the truck switches between a very cold environment, e.g. in a cold store, and normal surroundings, ice or condensation may form on the sensor. The signal may then briefly fail until the condensation or icing has subsided.

## Emergency operation in the event of malfunctions

In the event of a malfunction in the height measurement system, the truck switches to emergency operation.

In emergency operation, the assistance systems listed below that are dependent on the lift height are not available:

- Lift height display
- Fork wear protection
- Lift mast transition damping

Due to the lack of a measured value, the assistance systems that are dependent on the lift height will instead use calculated values for the lift height.

For safety reasons, the calculated value is always below the actual lift height value.

The following assistance systems can continue to be operated, but with the restrictions of emergency operation:

- **Intermediate lift cut-out**

– Release the lifting operating device so that it can return to the zero position.

The fork carriage can then continue lifting at a reduced speed.

- **Lift mast end-stop damping**

– Release the lifting operating device so that it can return to the zero position.

**⚠ WARNING**

Risk of collision with the hall ceiling.

The fork carriage can now be lifted to the maximum lift height without limitation.

– Take note of the height of the ceiling.

- **Speed reduction when the fork carriage is raised**

The speed reduction activates at a lower lift height than in normal operation.

## Lift height display (variant)

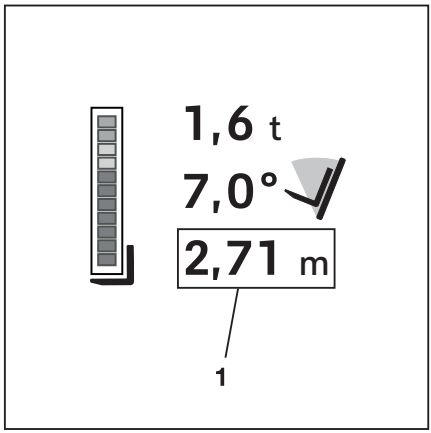


If the truck is equipped with the optical lift height measuring system, the current lift height (1) appears permanently in the display-operating unit.

The lift height displayed corresponds to the height of the bottom edge of the fork arms. If desired, the authorised service centre can set a different value. If a different attachment is installed, the authorised service centre must adjust this value.

The system works across the entire lift range, from ground level up to the maximum lift height.

When properly configured, the measurement inaccuracy is as follows:

| | |
|---|---|
| Repeatability | ±5 mm |
| Maximum measurement inaccuracy | ±45 mm |

**NOTE**

*If the prerequisites on the truck have changed, e.g. the tyres are worn, the value displayed for the lift height may differ more from reality. In this case, the lift height display must be zeroed.*

– See the section entitled "Zeroing the assistance systems".

## easy Target (variant)

"easy Target" is an additional assistance function for the lift height measurement.

With this assistance function, the fleet manager can use their authorisation to define and save regularly approached lift heights. Up to ten different lift heights can be set for ten different areas of the warehouse.

"easy Target" works across the entire fork lift range, from ground level up to the maximum lift height of the truck.

For the various operating devices for the hydraulic functions, the approached lift heights are stored as follows.

- Multi-lever, mini-lever and Fingertip operation:
  Function key
- Joystick 4Plus operation:
  Shift key "F"

For harmonisation, the function key and the shift key "F" are referred to as the "F button" in the next sections.

## Configuring easy Target

To use the function, the desired lift heights must be configured. The desired lift heights can be entered directly in the display-operating unit. In addition, the "Automatic mast vertical positioning" variant must be set up.

NOTE

*See the sections "Automatic mast vertical positioning" in the subchapter "Tilt angle-dependent assistance systems".*

– Stop the truck.

– Actuate the parking brake.

– Activate the "Access authorisation for the fleet manager".

### Defining the lift heights by entering them in the display-operating unit

– Press the button.

– Press the softkey.

– Press the `Truck settings` softkey.

– Press the `easy Target` softkey.

A selection with the available areas of the warehouse opens.

– Press the appropriate softkey for the desired area of the warehouse to define a lift height.

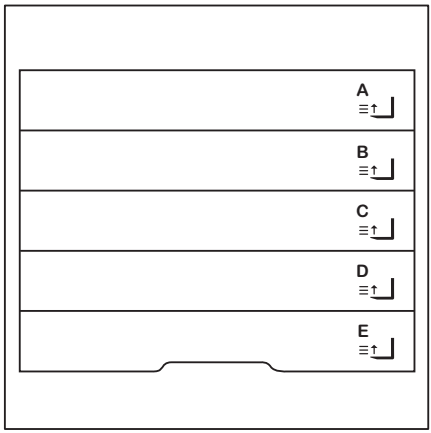


A selection with the lift heights that can be defined for this area of the warehouse opens.

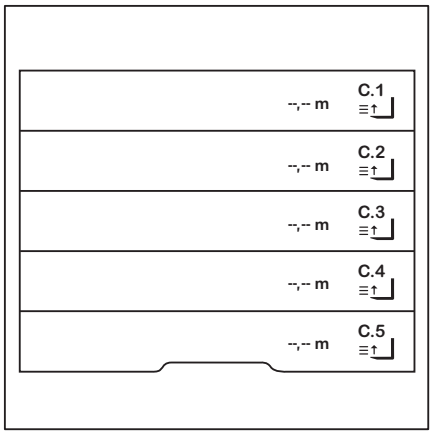


NOTE

*This example shows the available, definable lift heights for area "C" of the warehouse. This areas of the warehouse can be name individually by the authorised service centre.*

– Press the appropriate softkey for the desired lift height.

In this menu, you can define the desired lift height. ▷

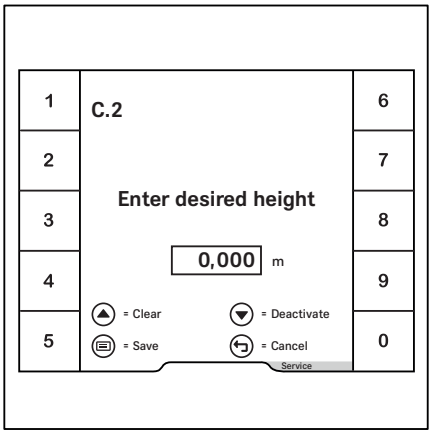


– Enter the lift height using softkeys `0 to 9`.

– To `save`, press the button.

The menu closes. The selection with the lift heights that can be defined for this area of the warehouse opens.

NOTE

*The defined areas of the warehouse can also be displayed as a favourite. For information on how to do this, see the original operating instructions for the display-operating unit.*

## Defining the lift heights by approaching the lift height

– As described in the previous section, select the desired area of the warehouse to define a lift height.

– Release the parking brake and drive to the single pallet position for which the lift height is to be defined.

– Lift the fork carriage to the desired lift height. ▷

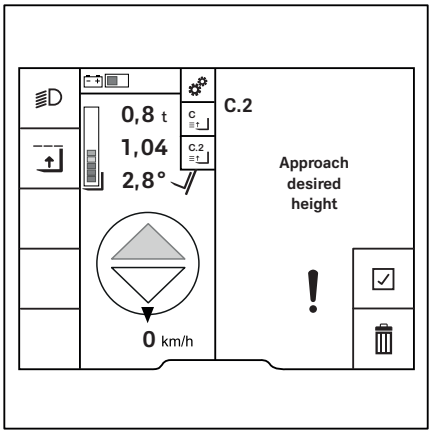


– When the desired lift height is reached, stop the lifting operation.

– To confirm, press the ✓ softkey.

The lift height is stored.

The stored lift height is displayed on the previously selected storage space. ▷

In this example, the lift height is 1.04 m.

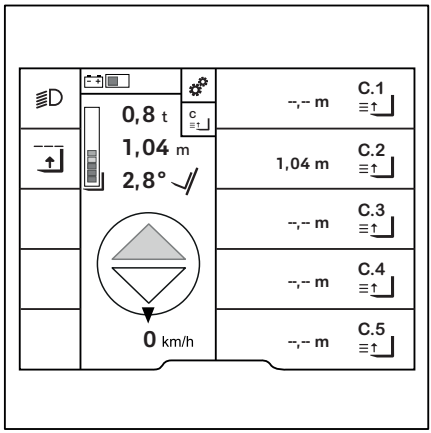


## Operating easy Target ▷

To use easy Target, at least one lift height must be stored. The procedure for saving a lift height is described in the section "easy Target Configuration".

Using the "load measurement" function, the truck automatically detects whether there is a load on the fork.

The assistant for placing a load in stock or removing a load from stock detects if the driver wants to store or remove something. In this example, the stock removal assistant (1) is active. The orange activation bar next to the symbol indicates this. To switch to the stock placement assistant, push the softkey next to the symbol.

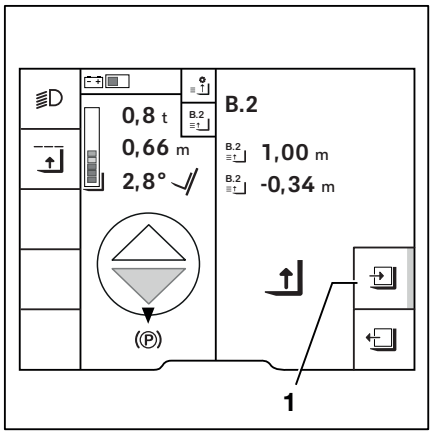


**NOTE**

*If the load is less than 150 kg, the load may not be detected. A stock placement operation is then started.*

– In this case, push the softkey to switch to the stock removal assistant.

Select the desired area of the warehouse either in the function menu "Load ▸ easy Target" or via the favourites. The adjacent example shows the selection via a favourite (2).

– Approach the selected lift height of the area of the warehouse with the fork carriage.

The next steps required for this are shown on the display. The symbols described below are used for operation.

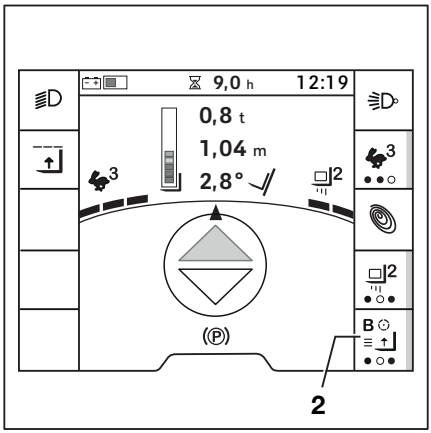


### Symbols used and their meanings

| | |
|---|---|
| | Place in stock |
| | Remove from stock |
| | Lift the fork carriage |
| | Lower the fork carriage |
| | Retract fork |
| | Extend fork |

## Placing the load in stock

The adjacent example shows the direction of movement of lifting (4) to the next stored lift height (3). The distance until the next lift height (5) is reached is displayed after the lift height has been selected.

– Move the operating device for the hydraulic function in the desired direction.

– Press the "F button" and hold it down.

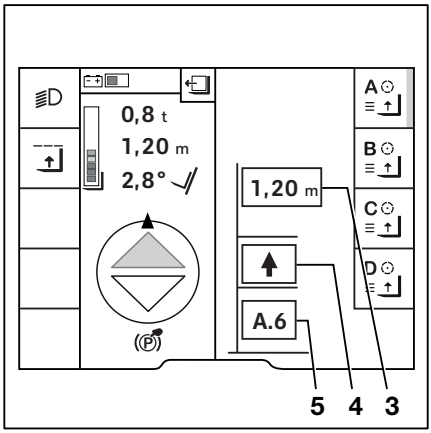


3 Next stored lift height
4 Current direction of movement of the fork carriage
5 Next height in the direction of movement

– When the fork carriage approaches the desired lift height, release the "F button".

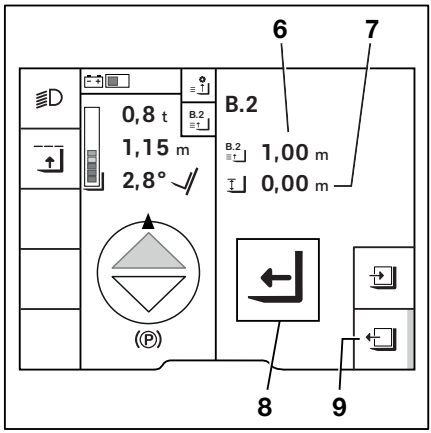


The display shows the height of this lift height 1.00 m (6) and the distance of the fork carriage to this lift height 0.00 m (7).

When the lift height is reached, the fork carriage stops automatically.

The orange activation bar next to the "Place in stock" symbol (9) indicates that the stock placement assistant is active.

The stock placement assistant gives the instruction:

– Move the load into the rack (8).

After the load has been placed in stock, the symbol indicates that the load must next be lowered.

– Lower the fork carriage.

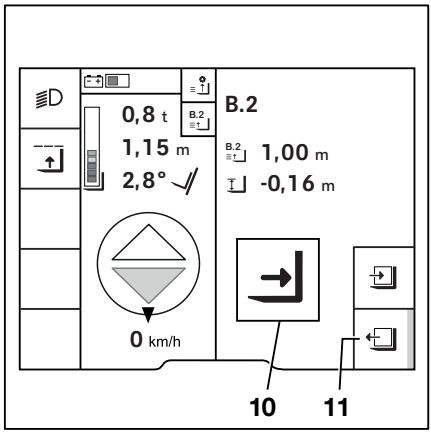


The fork carriage is automatically lowered only until the load has been set down. The fork carriage also stops if the operating device is still actuated.

The orange activation bar next to the "Place in stock" symbol (11) indicates that the stock placement assistant is active.

The stock placement assistant gives the instruction:

– Move the load out of the rack (10).

## Removing the load from stock

Select the desired area of the warehouse either in the function menu "Load ▸ easy Target" or via the favourites. The adjacent example shows the selection via a favourite (12).

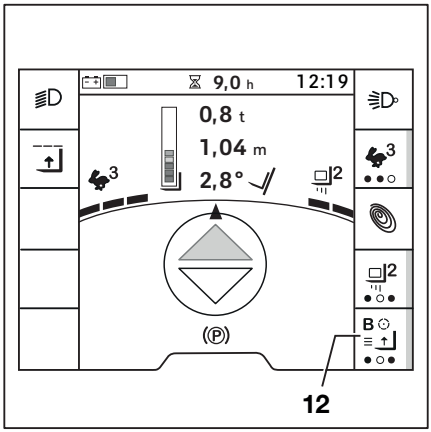


– Approach the selected area of the warehouse.

– Move the operating device for the hydraulic function in the desired direction.

After pressing the "F button", the display shows which stored lift height is reached next in the current lift direction.

– When the operating device is moved, press and hold the "F button".

– When the fork carriage approaches the desired lift height, release the "F button".

When the lift height is reached, the fork carriage stops automatically. It is also taken into account that the load is on a pallet.

– Move the fork into the rack.

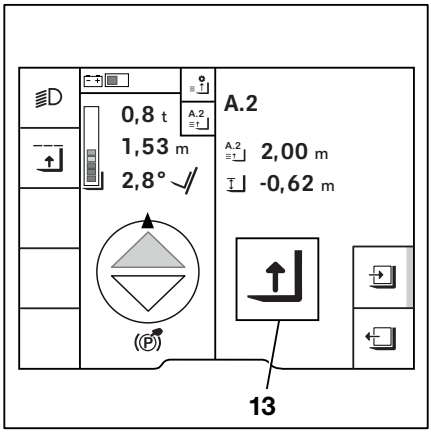


The symbol ⤒ (13) indicates that the load must be raised next.

– Raise the fork carriage.

The fork carriage is automatically raised only until the load can be removed from the rack. The fork carriage also stops if the operating device is still actuated.

The orange activation bar next to the "Remove from stock" symbol indicates that the stock removal assistant is active.

The display indicates that you need to reverse.

As soon as the "backwards" drive direction has been selected, the process is complete. The fork carriage reacts to the movements of the lifting and lowering operating devices again.

## Intermediate lift cut-out (variant) ▷

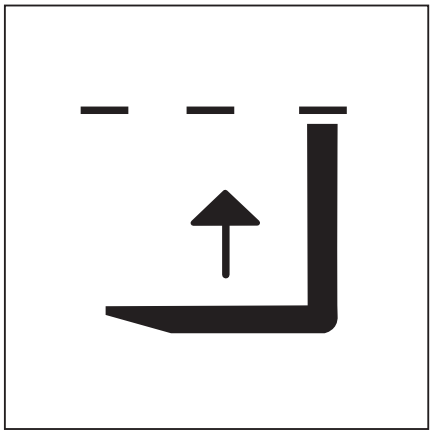

This function interrupts the lifting process at a set lift height. The intermediate lift cut-out function is useful if the fork carriage is frequently lifted to a particular lift height.

There are two options when buying the truck:

1. When buying the truck, the lift heights at which the intermediate lift cut-out takes effect are defined.

   These lift heights are then set and activated on delivery.
2. No lift heights are defined when the truck is bought.

   The lift heights themselves are configured and defined with the "Access authorisation for the fleet manager". See "Configuration by the fleet manager" in this section.

**NOTE**

*Check the lift heights set here before use via the* `Intermediate lift cut-out` *menu.*

**NOTE**

*The fleet manager can use his access authorisation to set the lift heights at which the intermediate lift cut-out takes effect. If no fleet manager access is enabled, the authorised service centre must set the desired lift heights.*

The intermediate lift cut-out is always active when the truck is switched on. If the function is switched off, it is active again the next time the truck is switched on.

During the lifting operation, the active intermediate lift cut-out is indicated by the grey symbol . This means that the fork is located below the intervention height.

If the  symbol appears in black, the fork is just below the intervention height.

NOTE

*The display always displays the next lift limit that is in the path of the current lifting movement. The next lift limit at which the function will intervene is highlighted in grey in the display. As soon as the fork carriage nears the lift limit and the function intervenes, the display turns black.*

## Lifting beyond the current lift limit

To lift beyond the current lift limits, proceed as follows:

- When the fork carriage reaches the set lift limit and stops automatically, move the operating device to the zero position.
- Then push the operating device back into the "lifting" direction.
- You now have one second to bring the operating device back to the zero position and then move the operating device in the "lifting" direction again.

The fork carriage is raised higher.

If the symbol disappears, the fork is at or above the intervention height.

If the fork carriage is lowered to below the configured lift height for the intermediate lift cut-out, the intermediate lift cut-out function is switched on again.

**WARNING**

Risk of accident due to unintentional switch-off of the intermediate lift cut-out.

If the truck is also equipped with the "intermediate lift cut-out" variant and the shake function is performed close to an intermediate lift cut-out lift limit, this may inadvertently cancel the lift limit.

This can happen if the operating device has to be moved twice in order to cancel the lift limit. If the operating device for the shake function is then repeatedly actuated, this can cancel the lift limit. The fork carriage then moves beyond the lift limit during the shaking process. This can cause the fork carriage to collide with higher objects.

- Do not perform the **shake** function close to the lift height of a lift limit.
- Cancel the lift limit by pressing the "F button". See the following section.

## Option: Lifting beyond the intermediate lift cut-out using the "F button"

Optionally, the authorised service centre can configure the function so that the intermediate lift cut-out is suspended by pressing the "F" button on the operating devices for the hydraulic functions.

– Lift the fork carriage until it stops at the configured lift height.

– Release the "lifting" operating device and push the "F" button.

The black symbol disappears. The function is suspended for a short period.

– Continue lifting within one second, as otherwise the function will intervene again. If the function intervenes again, the black symbol will reappear.

## Switching off the intermediate lift cut-out

– Press the button.

The first menu level appears.

– Press the softkey.

– Press the softkey.

The orange-coloured activation bar next to the softkey goes out.

The symbol disappears from the main display.

The function is switched off until the next time the truck is restarted.

## Configuration by the fleet manager

– Activate the "Access authorisation for the fleet manager".

– Press the button.

– Press the softkey.

– Press the `Truck settings` softkey. ▷

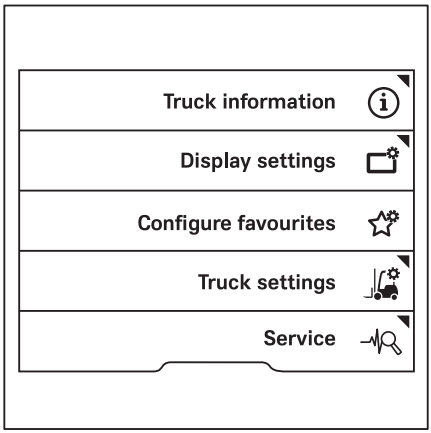


– Press the `Lift cut-out` softkey. ▷

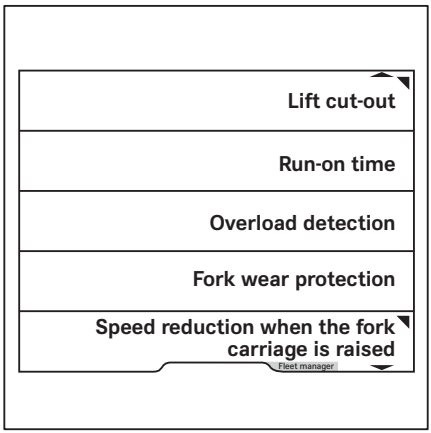

This menu offers three storage locations.

– To configure storage location 1, press the `Intermediate lift cut-out 1` softkey.

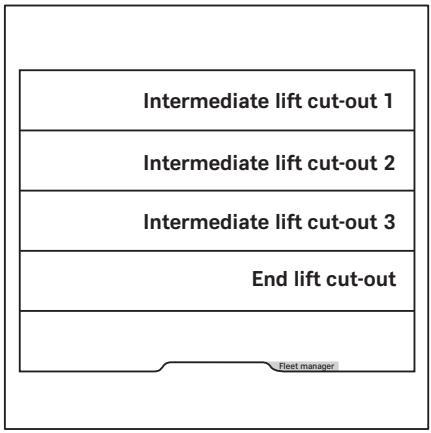


In this menu, you can define the desired lift height.

– Enter the lift height using softkeys `0 to 9`.

– To `save`, press the button.

– To `activate`, press the scroll button.

The menu closes. The storage locations are displayed. An orange activation bar indicates that the `intermediate lift cut-out 1` is activated.

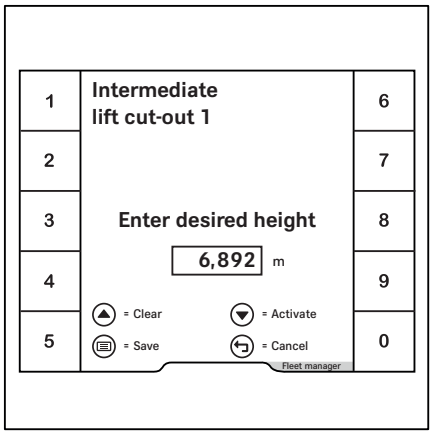

– To deactivate the `intermediate lift cut-out 1`, press the `Intermediate lift cut-out 1` softkey. ▷

– Press the scroll button ▽.

The `intermediate lift cut-out 1` is deactivated. The orange activation bar goes out.

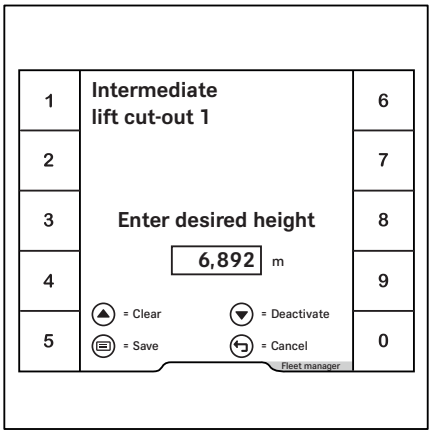


## Lift transition damping (variant)

This assistance system, in conjunction with the optical lift height measuring system, ensures that the lifting speed and lowering speed are adjusted at the lift mast transition points. As a result, the inner lift masts move in and out of the outer lift mast smoothly and without jolting. The lifting and lowering procedures are damped on telescopic lift masts, NiHo lift masts and triple masts. This protects the load against jerking movements.

## Lift mast end-stop damping (variant)

This assistance system, in conjunction with the optical height measuring system, ensures that the fork carriage reaches the lifting stops gently. This prevents the lifting movement from stopping abruptly.

If the truck is equipped with the "automatic mast vertical positioning" variant, the tilt stops will also be approached gently. This is done by the "tilt end stop damping" assistance system. This increases the comfort for the driver.

## End lift cut-out (variant)

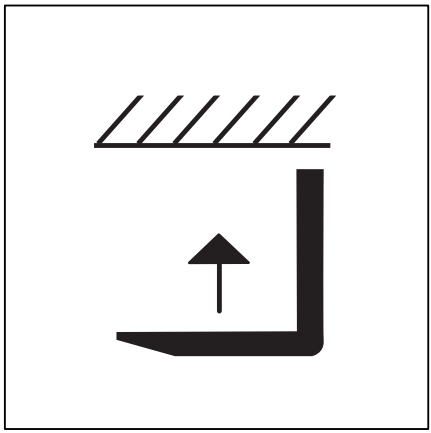

This assistance system limits the lift height of the fork carriage.

This assistance system does not release the driver from the obligation to observe the "Safety regulations for handling loads".

The end lift cut-out is active by default when the truck is switched on. The symbol appears in the display. It can be switched off if required. When the truck is switched on again, it is active again.

NOTE

*Check the lift heights set here before use via the* `End lift cut-out` *menu.*

### Switching off the end lift cut-out

– Stop the truck.

– Apply the parking brake.

– Press the button.

The first menu level appears.

– Press the softkey.

– Press the softkey.

The symbol goes out. The end lift cut-out is switched off.

– To switch the end lift cut-out on again, press the softkey again.

NOTE

*The maximum lift height cannot be modified by the driver. It can be changed either by the authorised service centre or with the "Access authorisation for the fleet manager" via the display-operating unit.*

### Configuration by the fleet manager

– Activate the "Access authorisation for the fleet manager".

– Press the button.

– Press the softkey.

– Press the `Truck settings` softkey. ▷

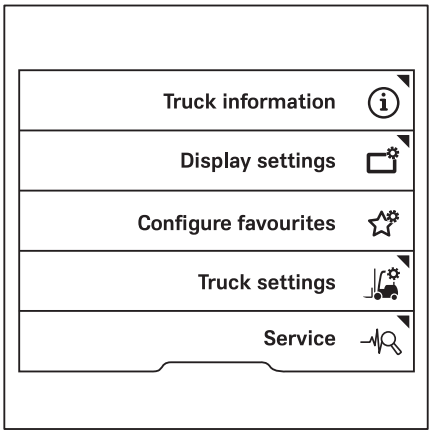


– Press the `Lift cut-out` softkey. ▷

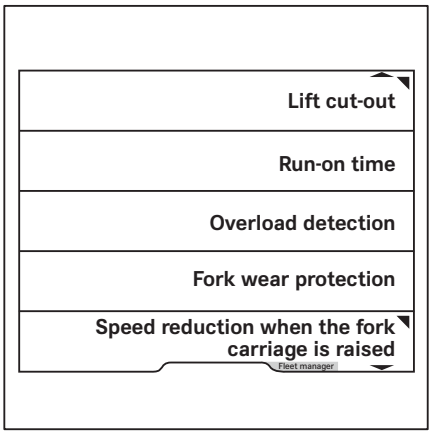

– Press the `End lift cut-out` softkey. ▷

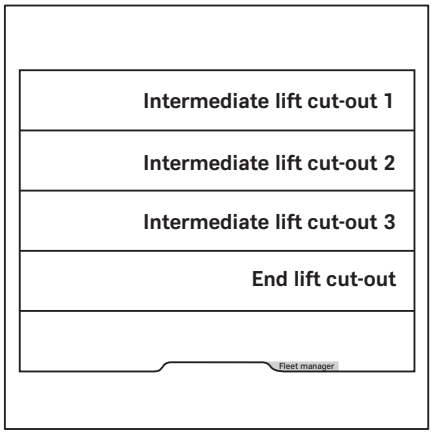


In this menu, you can define the desired lift height. ▷

– Enter the lift height using softkeys `0 to 9`.

– To `save`, press the ▤ button.

– To `activate`, press the scroll button ▽.

The menu closes. An orange activation bar indicates that the `End lift cut-out` is activated.

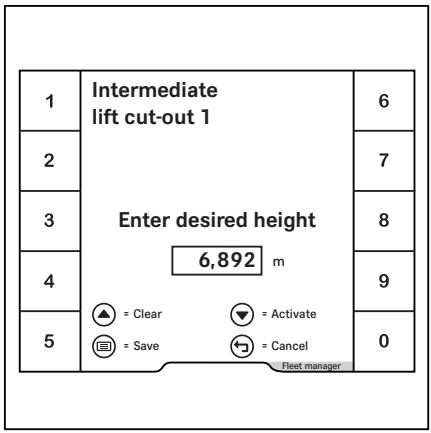

– To deactivate the `End lift cut-out`, press the `End lift cut-out` softkey. ▷

– Press the scroll button ▽.

The `End lift cut-out` is deactivated. The orange activation bar goes out.

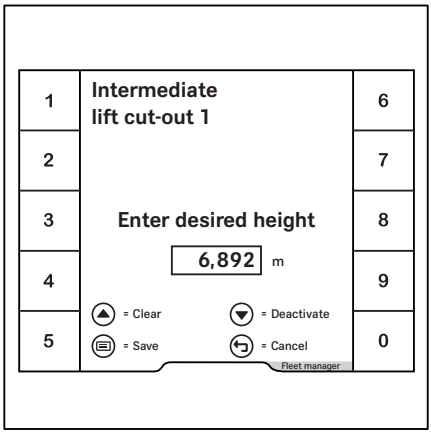


## Speed reduction when the fork carriage is raised (variant)

If the fork carriage is lifted to a height above 500 mm, this assistance system automatically reduces the speed of the truck.

NOTE

*This lift height can be changed up to 500 mm either by the authorised service centre or with the "Access authorisation for the fleet manager" via the display-operating unit.*

### Configuration by the fleet manager

#### Entering the lift height

– Activate the "Access authorisation for the fleet manager".

– Press the ☰ button.

– Press the ⚙ softkey.

– Press the `Truck settings` softkey. ▷

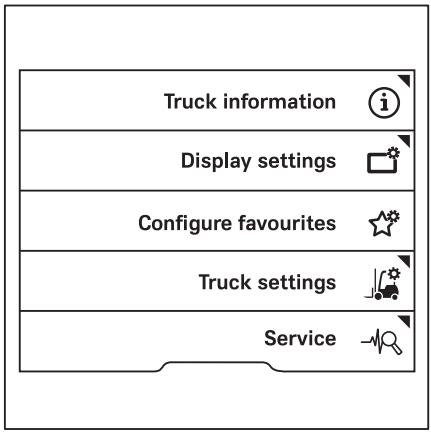


– Press the `Speed restriction for lift` softkey. ▷

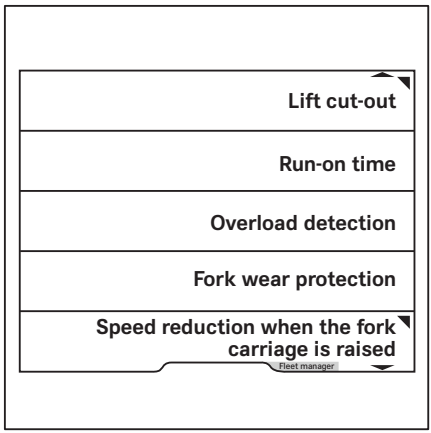

– Press the `Lift height` softkey. ▷

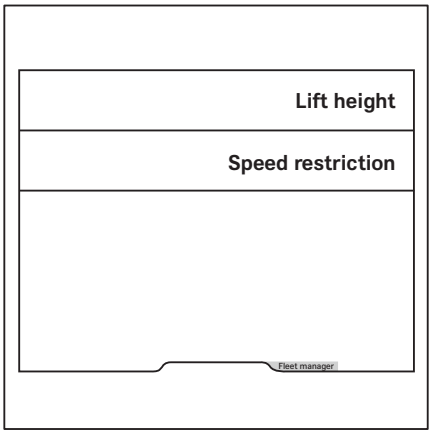


In this menu you can define the desired height. ▷

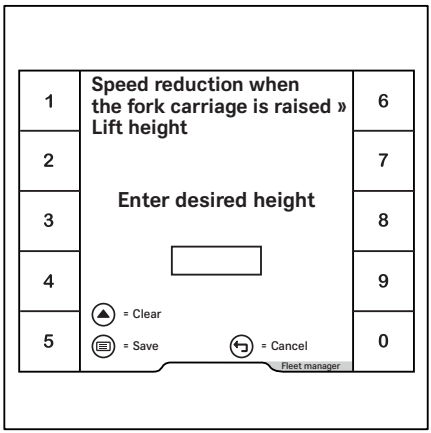


NOTE

*The assistance system intervenes automatically from 500 mm. Thus, the height can only be freely selected up to 500 mm.*

– Enter the height using softkeys `0 to 9`.

– To `save`, press the button.

The menu closes.

### Entering the speed restriction

The maximum speed can be defined, just like the lift height.

– Activate the "Access authorisation for the fleet manager".

– Press the button.

– Press the softkey.

– Press the `Truck settings` softkey. ▷

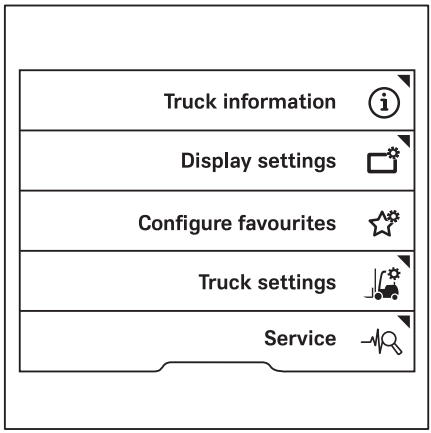


– Press the `Speed restriction for lift` softkey. ▷

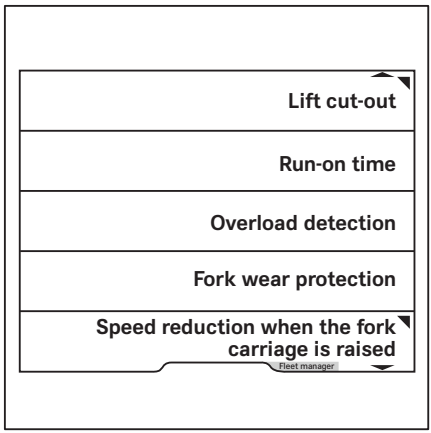

– Press the `Speed restriction` softkey. ▷

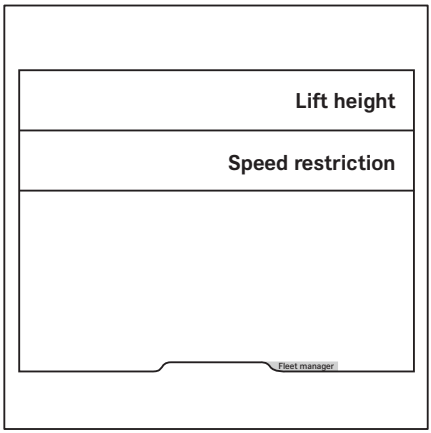


In this menu you can define the maximum speed. ▷

– Enter the speed using softkeys `0 to 9`.

– To `save`, press the ▤ button.

The menu closes.

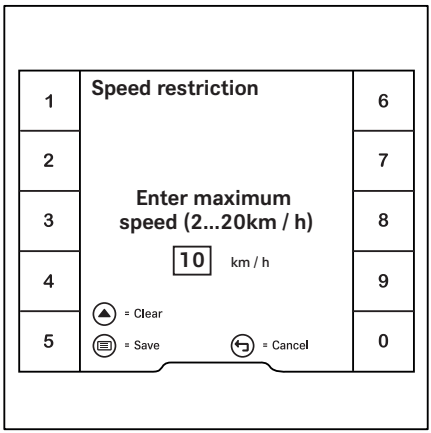

## Electrical fork wear protection (variant)

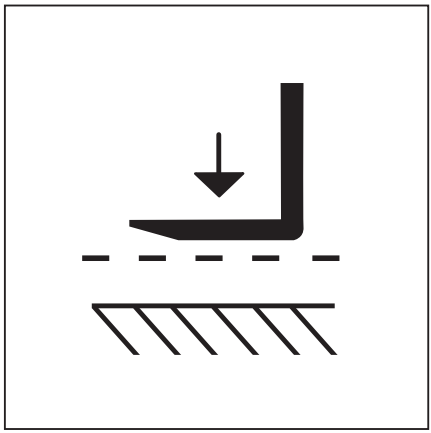

This assistance system, in conjunction with the optical height measuring system, ensures that the fork arms do not touch the ground. The correct height for inserting the forks in a pallet can also be configured. Since the fork must always be lowered completely when the truck is safely parked, the fork wear protection can also be temporarily suspended. See the following section "Lowering the forks completely".

NOTE

*The desired height of the fork wear protection can be changed either by the authorised service centre or with the "Access authorisation for the fleet manager" via the display-operating unit.*

The fork wear protection function is always active when the truck is switched on. The "fork wear protection" symbol appears in the display. Only the authorised service centre may deactivate the function.

- If the symbol is grey, the assistance system is switched on.
- If the symbol is black, the assistance system is taking effect.
  The fork carriage does not lower to a level that is higher than the set level.

### Lowering to the ground

NOTE

*The fork wear protection cannot be switched off permanently. The fork wear protection can be temporarily deactivated to lower the fork arms to the ground and securely park the truck.*

– Lower the fork carriage until the fork wear protection function intervenes.

– Release the "lower" operating device.

The fork wear protection is switched off.

– To lower the fork to the ground fully, activate the "lower" operating device again.

NOTE

*Alternatively, the authorised service centre can parametrise the "F" button to cancel the fork wear protection for the complete lowering of the fork.*

NOTE

*When you change fork arms, the fork wear protection must be zeroed.*

– See the section entitled "Zeroing the assistance systems".

## Configuration by the fleet manager

The height of the fork wear protection can be configured, for example, for retraction into pallets with a different height or uneven ground.

– Activate the "Access authorisation for the fleet manager".

– Press the button.

– Press the softkey.

– Press the `Truck settings` softkey. ▷

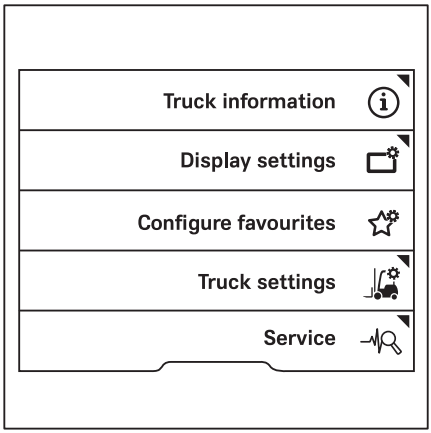

– Press the `Fork wear protection` softkey. ▷

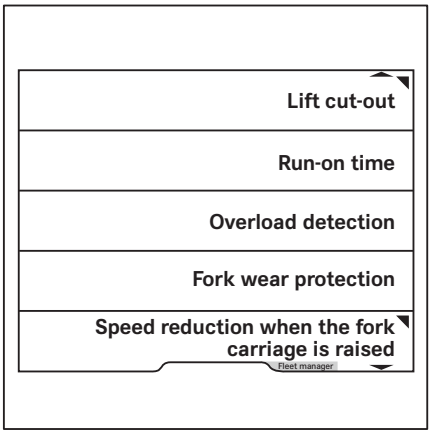


In this menu you can define the desired height. ▷

– Enter the height using softkeys `0 to 9`.

– To `save`, press the ☰ button.

The menu closes.

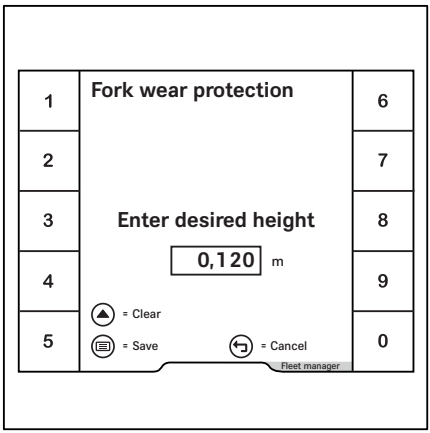

# Tilt angle-dependent assistance systems

## Mast tilt angle display (variant) ▷

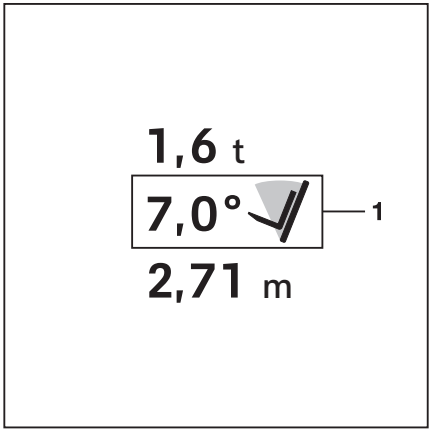


Knowing the actual tilt angle of the lift mast makes it easier to place loads into stock and remove loads from stock. If the truck is equipped with the "mast tilt angle display" assistance system, the lift mast tilt angle (1) is shown on the display.

NOTE

*When replacing worn-out pairs of tyres or when the front and rear tyres are worn to different levels, the mast tilt angle display must be zeroed.*

– See the section entitled "Zeroing the assistance systems".

## Tilt end stop damping (variant)

This assistance system ensures that the movement to the end positions is smooth. This protects the load against jerking movements.

## Automatic mast vertical positioning (variant) ▷

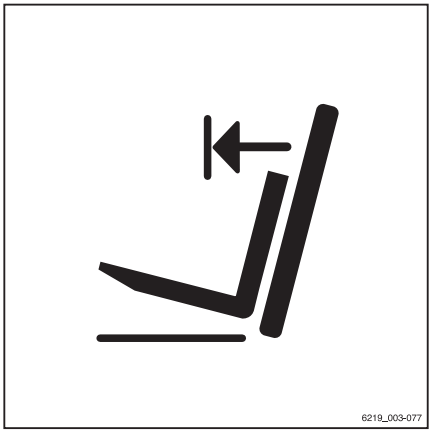


**CAUTION**

Risk of damage to property due to the lift mast colliding with racks or other objects!

– Before using the "automatic mast vertical positioning" assistance system, position the truck at a sufficient distance from racks and other objects.

The "automatic mast vertical positioning" assistance system can be used to set down the goods so that the goods are exactly vertical, e.g. paper rolls. This prevents damage when setting down the load. "Automatic mast vertical positioning" functions when tilting forwards. A further variant is available which also functions when tilting backwards. The tilt cylinders run into the end stops gently to prevent hard vibrations and impacts. Oscillating motions of the truck are minimised, thus increasing work safety. Automatic mast vertical

positioning reduces wear on various components, thereby reducing repair costs.

The "automatic mast vertical positioning" assistance system consists of the following individual functions:

- Display of the "Automatic mast vertical positioning" feature
- Automatic startup of the "Automatic mast vertical position" feature

The truck can also be equipped with only the "mast tilt angle display" feature.

**NOTE**

*Check the function of automatic mast vertical positioning whenever the truck is used.*

– See the section entitled "Function checking of the automatic mast vertical positioning function".

– Press the softkey.

The symbol appears in the display.

– Tilt back the lift mast until it reaches the end stop.

– Tilt the lift mast forwards.

The lift mast stops in the vertical position.

**NOTE**

*The lift mast also stops in the vertical position if it is tilted forwards by ≥ 3° from a backward tilt.*

**NOTE**

*The automatic mast vertical positioning must be calibrated in order to ensure accuracy at all times. The "access authorisation for the fleet manager" is required for the calibration. This access is required:*

- *When placing loads into stock and removing loads from stock on HGV ramps*
- *In the event of tyre wear*
- *If the lift mast is obviously not in the vertical position*

– See the section entitled "Calibrating the automatic mast vertical positioning".

## Function checking of the automatic mast vertical positioning function (variant)

**⚠ CAUTION**

Risk of damage to property due to the lift mast colliding with racks or other objects!

– Before using the "automatic mast vertical positioning" assistance system, position the truck at a sufficient distance from racks and other objects.

– To check the function of the automatic mast vertical positioning function, proceed as follows:

– Press the softkey.

The symbol appears in the display.

– Tilt back the lift mast until it reaches the end stop.

– Tilt the lift mast forwards.

The lift mast must stop in the vertical position.

The automatic mast vertical positioning can be used.

– If the lift mast does not stop in the vertical position, do not use the assistance system.

– In this case, contact your authorised service centre.

## Calibrating the automatic mast vertical positioning

The automatic mast vertical positioning is calibrated using a wizard on the display-operating unit.

**NOTE**

*The wizard requires access authorisation for the fleet manager. Access to the settings menu is only available if the truck is at a standstill and the parking brake is applied. If the parking brake is released prematurely, the settings menu will close.*

– Set the load down, if necessary.

– Drive the truck into an area that is to be used for placing loads into stock and removing loads from stock.

Once the "automatic mast vertical positioning" assistance system has been calibrated, a pallet can be stored horizontally in a rack when the truck is standing on a HGV ramp, for example.

– Lift the fork carriage slightly.

– Apply the parking brake.

– Attach a tilt angle template with a spirit level to the outer lift mast. ▷

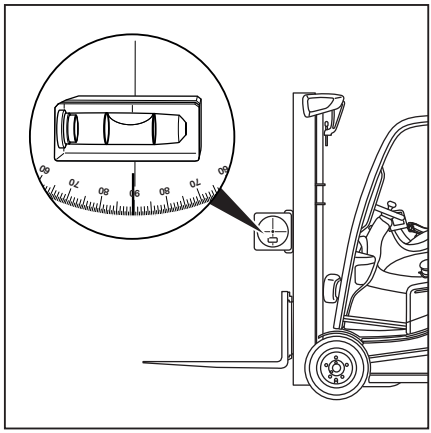

– Bring the lift mast to the vertical position according to the spirit level.

– Press the button.

– Press the Softkey.

– Activate the "Access authorisation for the fleet manager".

– Press the `Service` softkey. ▷

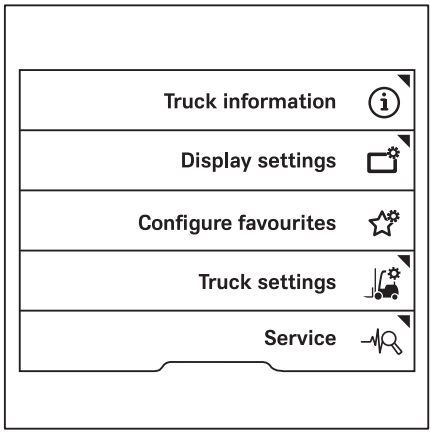

– Press the scroll keys △ ▽ until the `Calibration` menu appears. ▷

– Press the `Calibration` softkey.

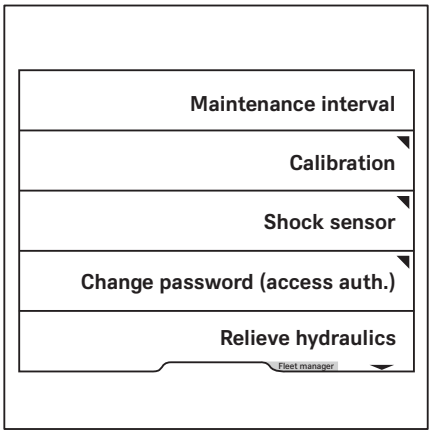


– Press the `Lift mast tilting` softkey. ▷

The wizard for calibrating the load measurement is started.

– Follow the instructions on the display.

– If the message `Calibration failed !` appears, press the ☑ softkey.

– Repeat the process.

After the calibration has been completed successfully, the message `Calibration successful` ✓ appears.

– Switch the truck off and on again.

The calibration is now complete.

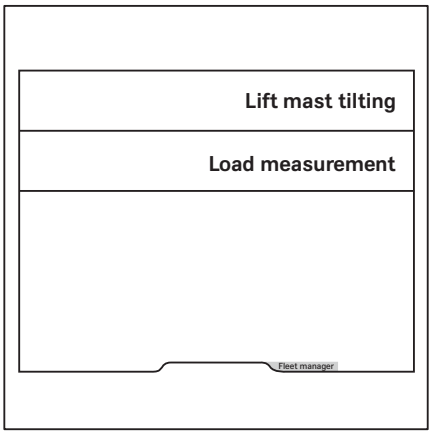


**NOTE**

*If the message* `A6701 Fault: Monitoring of assistance system` ⚠ *appears during the calibration, perform the calibration again.*

# Load-dependant assistance systems

## Overload detection (variant)

**⚠ WARNING**

Risk of accident as a result of exceeding the permissible load capacity!

This assistance system does not replace the driver's duty to observe the load capacity specified on the nameplate.

– Observe the load capacity specified on the nameplate.

This assistance system alerts the driver as soon as an excessive load is picked up. The message `Overload` ⚠ is shown on the display-operating unit.

The maximum load always refers to the sum of the load picked up plus any attachments present. The authorised service centre can configure the setting for the maximum load. However, the maximum load must not be higher than the nominal load.

The overload detection restricts the hydraulic functions as follows:

- If the rated capacity or the maximum load set by the authorised service centre is exceeded, the lifting speed is reduced.
- If the rated capacity or the set maximum load are exceeded by more than 10%, the "Lifting" function is disabled.

**NOTE**

*Please note the following special considerations:*

- *If the load pressure sensor fails, the maximum load (nominal load) is assumed. The function engages to the maximum extent.*
- *If the lifting stage switch fails, the truck control unit assumes the fork carriage is at the maximum lift height.*
- *In the case of overload, the "lifting" function is blocked from the factory. The authorised service centre can remove the "lifting" function block and restrict the function instead.*

## Configuration by the fleet manager

– Activate the "Access authorisation for the fleet manager".

– Press the button.

– Press the softkey.

– Press the `Truck settings` softkey. ▷

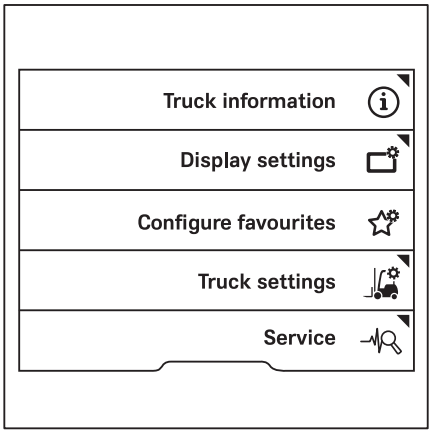


– Press the `Overload detection` soft-key. ▷

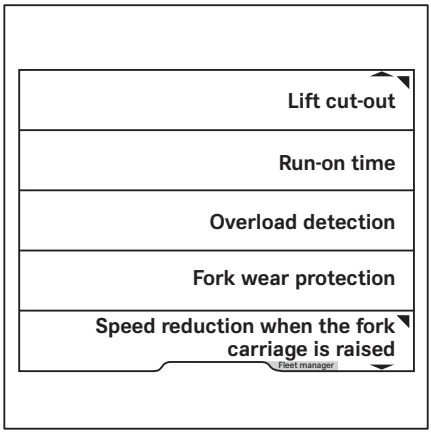

In this menu you can define the desired weight.

– Enter the weight using softkeys `0 to 9`.

**NOTE**

*Only a lower value than the permissible load capacity of the truck can be entered as an overload.*

– To `save`, press the button.

The menu closes.

▷

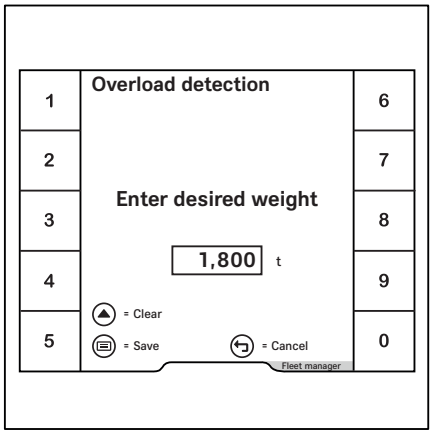


## Dynamic Load Control 1 (variant)

**WARNING**

Risk of accident as a result of overloading!

Dynamic Load Control 1 is not a safety function and does not release the driver from the duty to observe the information specified in the load capacity diagram!

**WARNING**

Risk of accident due to the slow response of the lifting system!

If the lifting movements are configured to use low dynamics, the lifting system responds after a delay when the operating device is released, even in an emergency. The fork carriage does not stop immediately; instead, it takes approx. one second.

This behaviour may also occur when specific settings are configured for the Dynamic Load Control 1.

– Work with particular attention and care.

– Observe the "Dynamics of the hydraulic movements" section in the chapter entitled "Lifting".

Dynamic Load Control 1 improves the handling of the load. This function protects the truck and the load from abrupt movements.

Dynamic Load Control 1 regulates the lifting and tilting dynamics and the driving dynamics according to the following criteria:

- Lift height
- Load weight

Load movements which could lead to critical conditions are slowed down if necessary.

Dynamic Load Control 1 intervenes in the following operating situations:

- With a telescopic lift mast:
  The fork carriage is at least 2.1 m off the ground.
- With a triple lift mast or NiHo lift mast:
  The fork carriage is in the second lifting stage
- The load picked up exceeds 50% of the nominal load

The driving speed is reduced to 5 km/h at a lift height of 2.1 m and higher or in the second lifting stage.

**NOTE**

*When the fork carriage has been lowered below the lift heights mentioned above, the driver can deactivate the speed restriction again. Release the accelerator pedal for a short period to do this.*

If a sensor belonging to Dynamic Load Control 1 fails, the level of intervention from the function is increased to a maximum.

## Dynamic Load Control 2 (variant)

**WARNING**

Risk of accident as a result of overloading!

"Dynamic Load Control 2" is not a safety function and does not release the driver from the duty to observe the information specified in the load capacity diagram!

**⚠ WARNING**

Risk of accident due to the slow response of the lifting system!

If the lifting movements are configured to use low dynamics, the lifting system responds after a delay when the operating device is released, even in an emergency. The fork carriage does not stop immediately; instead, it takes approx. one second.

This behaviour may also occur when specific settings are configured for the Dynamic Load Control 2.

– Work with particular attention and care.
– Observe the "Dynamics of the hydraulic movements" section in the chapter entitled "Lifting".

"Dynamic Load Control 2" improves the handling of the load. This function protects the truck and the load from abrupt movements.

Dynamic Load Control 2 regulates the lifting and tilting dynamics and the driving dynamics according to the following criteria:

- Lift height
- Load weight
- Load centre of gravity

Dynamic Load Control 2 intervenes in the following operating situations:

- With a telescopic lift mast:
  The fork carriage is at least 2.1 m off the ground.
- With a triple lift mast or NiHo lift mast:
  The fork carriage is in the second lifting stage
- The truck centre of gravity has shifted to an unfavourable position due to the position of the load

Dynamic Load Control 2 calculates the interaction between these three criteria and intervenes in the calculated result.

Load movements which could lead to critical conditions are slowed down if necessary.

The driving speed is reduced to 5 km/h at a lift height of 2.1 m and higher or in the second lifting stage.

NOTE

*When the fork carriage has been lowered below the lift heights mentioned above, the driver can deactivate the speed restriction again. Release the accelerator pedal for a short period to do this.*

The bar display on the display of the display-operating unit is part of the load information. It is part of the Dynamic Load Control 2.

The number and colour of the bars indicates to what extent the determined load weight and load centre of gravity affect the stability of the truck.

The bar display is divided into three sections and ten segments.

A **Grey area**

The dynamics of the lifting movements and tilting movements are not noticeably reduced.

B **Yellow area**

If a load that is close to the nominal load is picked up, the display moves into the yellow area.

The dynamics of the lifting movements and tilting movements are noticeably reduced.

– Handle the load with the appropriate level of care.

C **Red area**

When the combination of load weight and load centre of gravity exceeds the specified value, the display moves into the red area.

The dynamics of the lifting movements and tilting movements are significantly reduced.

– In this case, set down the load or tilt backwards.

▷

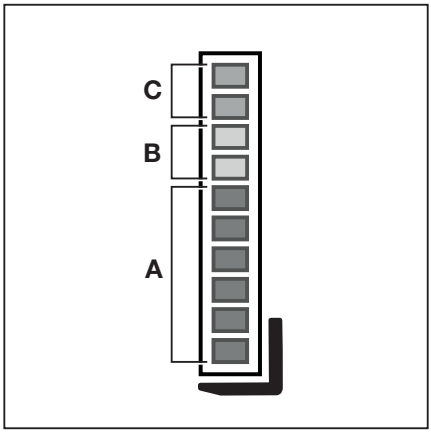


A Grey
B Yellow
C Red

If a sensor belonging to Dynamic Load Control 2 fails, the level of intervention from the function is increased to a maximum. A cross appears instead of the bar.

– If this display appears permanently, contact the authorised service centre.

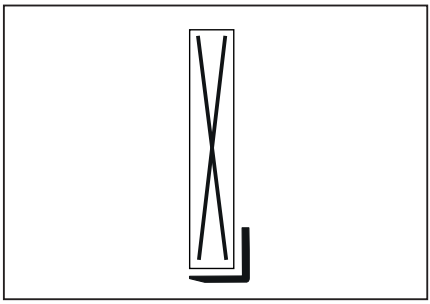

## Load measurement (variant)

Knowing the weight of the load to be transported gives the driver greater security. If the truck is equipped with the "load measurement" assistance system, the weight of the lifted load is measured and displayed in the display-operating unit (1). The measuring accuracy is 5% of the rated capacity.

– Observe the following safety information.

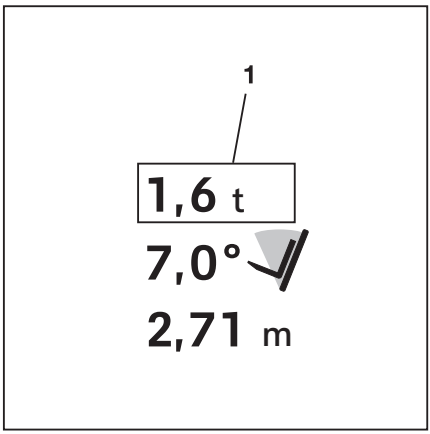


**DANGER**

**Risk of accident from a falling load!**

The load may fall if the load centre of gravity has not been taken into account or the load has not been picked up securely.

– Pick up the load securely; see the chapter entitled "Picking up loads".

**WARNING**

Risk of accident as a result of exceeding the residual load capacity.

If the weight determined by a load measurement exceeds the permissible residual load capacity of the truck, the truck cannot be operated safely.

– Set down and reduce the load immediately.

– If necessary, use another truck with sufficient load-bearing capacity.

NOTE

*The load measurement must be calibrated in order to ensure accuracy at all times. The "access authorisation for the fleet manager" is required for the calibration. This access is required:*

- *After changing the fork arms,*
- *After fitting or changing attachments*
- *If the displayed values are obviously incorrect*

If `-.--  t` is displayed permanently, this means that the function is calibrated incorrectly (load < 0 kg).

– See the section entitled "Calibrating the load measurement".

NOTE

*When you change fork arms or attachments, the load measurement must be zeroed.*

– See the section entitled "Zeroing the assistance systems".

## Calibrating the load measurement

If the truck is equipped with the "load measurement" assistance system, then this assistance system must be calibrated.

The load measurement is calibrated using a wizard on the display-operating unit.

NOTE

*The calibration procedure requires access authorisation for the fleet manager. Access to the settings menu is only available if the truck is at a standstill and the parking brake is applied. If the parking brake is released prematurely, the settings menu will close.*

– Set the load down, if necessary.

– Drive the truck onto an even surface.

– Apply the parking brake.

– Press the ☰ button.

– Press the ⚙ Softkey.

– Activate the "Access authorisation for the fleet manager".
– Press the `Service` softkey. ▷

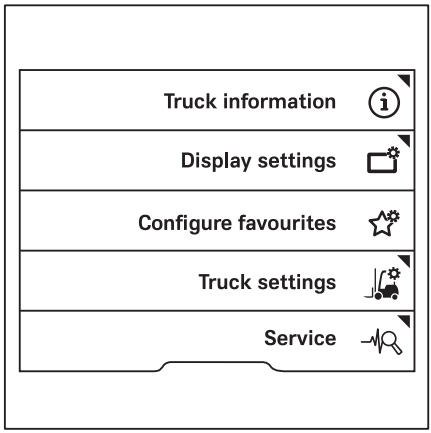


– Press the scroll keys △ ▽ until the `Calibration` menu appears. ▷

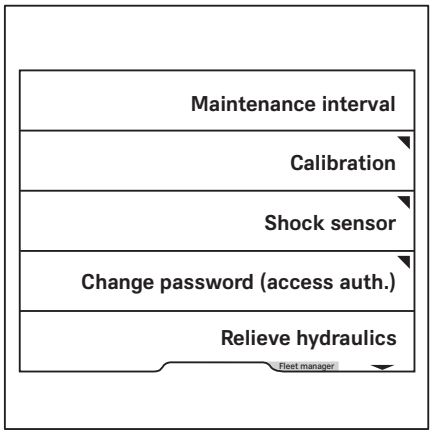

– Press the `Load measurement` softkey. ▷

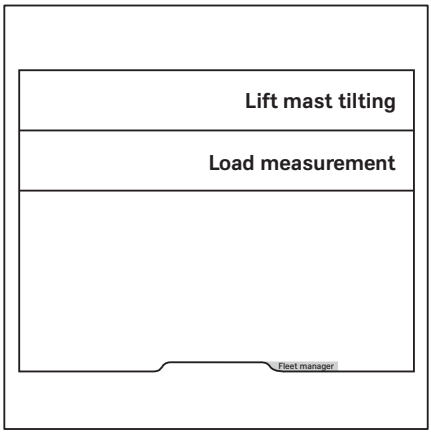


The wizard for calibrating the load measurement is started.

– Follow the instructions on the display.

– If the message `Calibration failed !` appears, press the ☑ softkey.

– Repeat the process.

After the calibration has been completed successfully, the message `Successful calibration` ✓ appears.

– Switch the truck off and on again.

The calibration is now complete.

**NOTE**

*If the message* `A6701 Fault: Monitoring of assistance system` ⚠ *appears during the calibration, perform the calibration again.*

## Precision load measurement (variant) ▷

This assistance system is available only if the truck is equipped with the "load measurement" variant.

The "Precision load measurement" variant allows the weight of the load being picked up to be measured and displayed on the display-operating unit accurate to within 3% of the rated capacity of the truck.

**NOTE**

*If the load is to be measured exclusive of the load pick-up device, run the tare function. See the next section.*

– Pick up the load safely.

– Press the ▤ button.

The first menu level appears.

– Press the ▤ softkey.

– Press the softkey (1). ▷

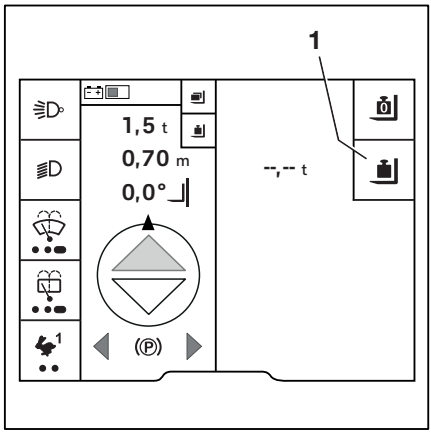


The `Lower fork slightly` prompt is displayed. ▷

– Lower the fork carriage.

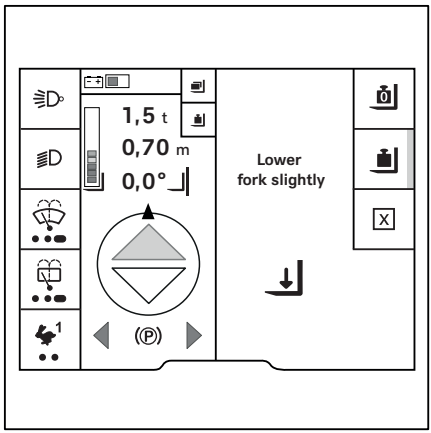


**NOTE**

*Slowly lowering the fork carriage increases the measurement accuracy in trucks with multi-lever operation.*

The value is calculated. The `Calc. ongoing` message appears.

If the calculation was successful, the measured weight of the load (1) is displayed. ▷

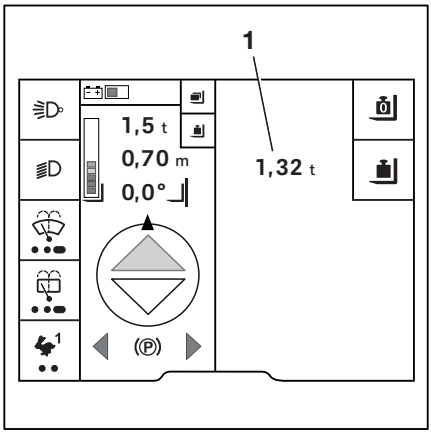


NOTE

*If the tare function was not active, the full weight of the load being picked up is displayed.*

The measured weight remains displayed until:

- The load has been measured again
- The sensor system detects a change in the weight
  In this case, `-.--  t` is displayed as the weight.

## Tare function (variant) ▷

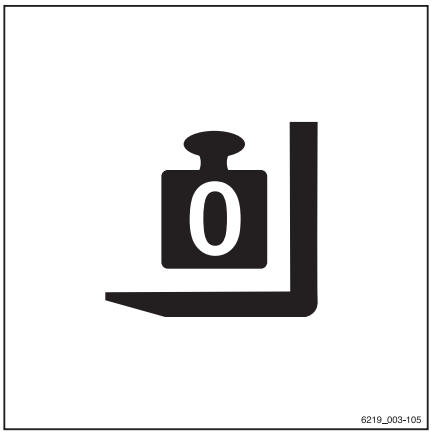


The tare function is a sub-function of the precision load measurement function. If the precision load measurement function should not factor in the weight of a load container, the tare function must be run. It is then possible to determine the net weight of the raised load.

NOTE

*During the following process, the fork carriage must be lowered slightly. When doing so, the fork must not touch the ground, as otherwise the result will be inaccurate.*

– Set the lift mast to vertical.

– Pick up the empty load container, such as a crate.

– Raise the fork to a height of between 300 mm and 800 mm.

– Press the ☰ button.

The first menu level appears.

– Press the ▤ softkey.

– Press the ▤ softkey.

– Press the softkey (1).

The activation bar next to the symbol lights up.

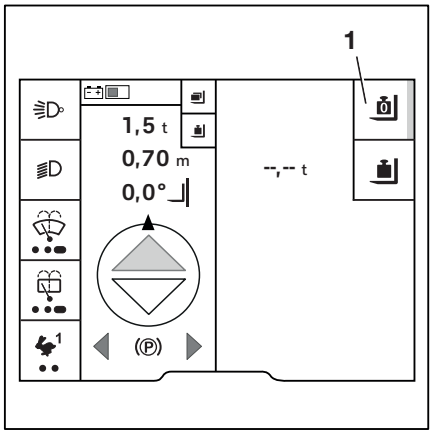


The `Lower fork slightly` prompt is displayed.

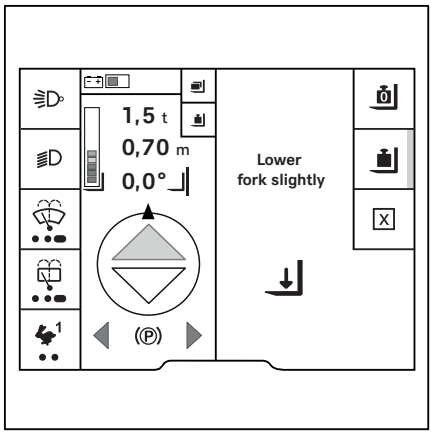


– Lower the fork carriage.

The value is calculated. The message `Zeroing ongoing` is displayed.

If the tare function was run successfully, a weight of 0.00 t is displayed. The activation bar next to the symbol remains illuminated.

– If the tare function was not run successfully, follow the prompts on the display and repeat the process.

When a load is picked up, `-.-- t` is displayed.

The "Precision load measurement" can be performed.

– To clear the tare weight, press the softkey again.

**⚠ WARNING**

Risk of accident due to incorrect load specification.

If the requirements for the precision load measurement function change, the tare function must be run again, for example if a precision load measurement needs to be performed without a crate. Otherwise, the new precision load measurement will continue to deduct the weight of the crate.

– Run the tare function again without a load or a crate.

## Total load (variant) ▷

Use the "total load" variant to calculate the total weight of multiple loads. The "total load" is an additional function of the "load measurement". It records the individual loads and stores up to three total loads.

This allows, for example, three different containers to be laden and their loading weight to be determined. This function is helpful if, for instance, a container has a limited payload and you want to know when the permissible load weight has been reached.

This function is useful for comparing the loads indicated on delivery documents to the actual loads, for example.

The procedure for adding up the total load is as follows:

1 Pick up the load and call up the load menu,
2 Measure the load,
3 Add/subtract the load.

**⚠ WARNING**

Risk to stability.

If the weight determined by a load measurement exceeds the permissible residual load capacity of the truck, the truck cannot be operated safely.

– Do not lift the load higher than 800 mm.
– Set down and reduce the load immediately.
– If necessary, use another truck with sufficient load-bearing capacity.

**NOTE**

*Lift the load to a height of between 300 mm and 800 mm, since the load must subsequently be lowered slightly for the weighing process. If the weighing process establishes that the load is too heavy, the load must not be lifted higher than 800 mm. The fork arms must not touch the ground.*

### Picking up the load and calling up the load menu

– Pick up the load safely.
– Press the ▤ button.

The first menu level appears.

– Press the softkey.

– Press the softkey.

A menu appears with three storage locations for the total load. ▷

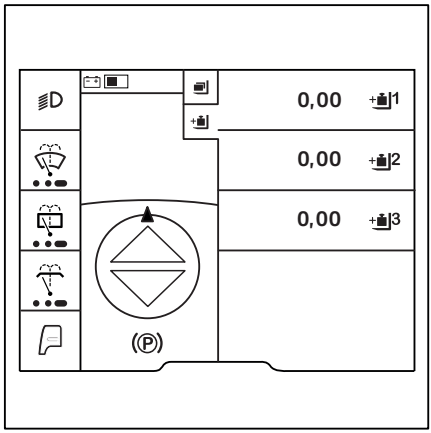


The total load is explained here using 1.

– Press the 1 softkey.

The menu for storage location 1 appears. ▷

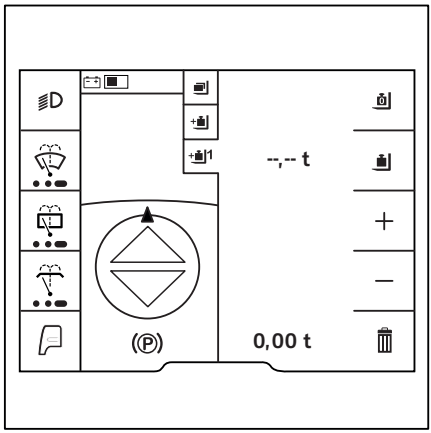


This menu provides the following functions:

- Tare
- Precision load measurement
- + Add load
- – Subtract load
- Delete total load

## Measure load

– Press the softkey. Measure the load.

The message with the prompt `Lower fork slightly` appears.

– Lower the fork carriage.

The value is calculated. The `Calc. ongoing` message appears.

If the calculation was successful, the load is displayed.

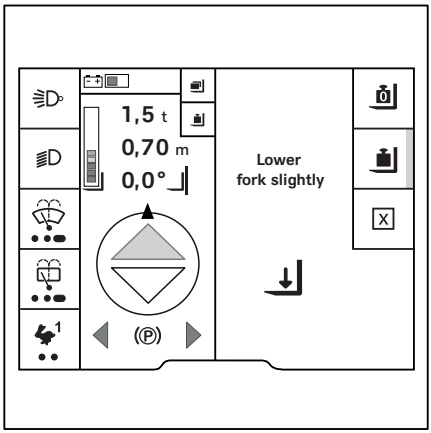


## Adding a load

– Pick up the load to be added.

– Measure the load as described previously.

– Press the + softkey.

The load is saved automatically.

## Subtracting a load

– Pick up the load to be subtracted.

– Measure the load as described previously.

– To subtract the current load, press the
  – softkey.

The current load is subtracted from the sum.

The load is saved automatically.

NOTE

*If, for instance, this load was added to the wrong total load, it is also possible to perform a subtraction with the previously measured and added load.*

## Delete total load

– To delete the total load, press the 🗑 softkey.

The `Clear total load?` message ? is displayed.

– To clear, press the ☑ softkey.

– To cancel, press the ☒ softkey.

The display changes back to the menu with the three storage locations.

# Zeroing the assistance systems

## Zeroing process

The following assistance systems sometimes require zeroing.

- **Load measurement**
  When changing fork arms or attachments
- **Lift height display**
  When replacing worn tyres
  For increasingly worn tyres / for new tyres
- **Mast tilt angle display**
  ○ When replacing a worn pair of tyres, if the front and rear tyres are worn to different levels.
  ○ If the front and rear tyres show different levels of wear.
- **Electrical fork wear protection**
  When changing fork arms

**NOTE**

*The zeroing for the "load measurement" assistance system is shown here as an example.*

– Activate the "Access authorisation for the fleet manager".

– Press the button.

– Press the softkey.

– Press the `Truck settings` softkey. ▷

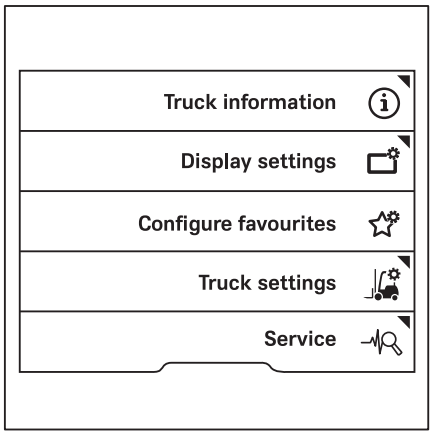

– Press the `Zeroing` softkey. ▷

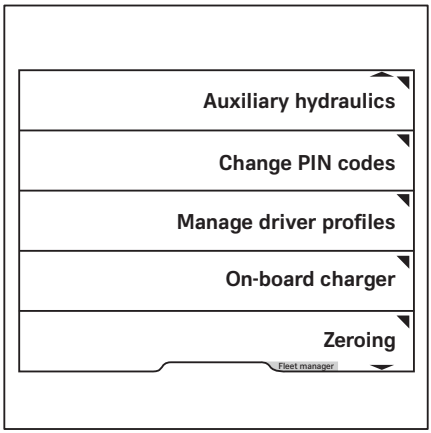


– Press the softkey for the assistance function for which the zeroing is to be performed, e.g. `Load weight`. ▷

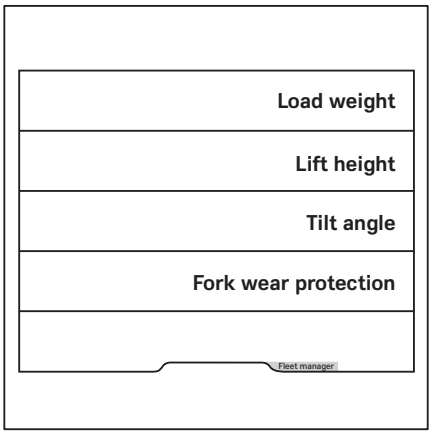


NOTE

*The processes for zeroing the other assistance systems are almost identical.*

The instructions are shown in the display. ▷

Here: `Lower forks`

After the instructions have been followed, the messages `Zeroing successful` or `Zeroing failed` are displayed.

– If zeroing failed, try again.

– If zeroing fails repeatedly, contact your authorised service centre.

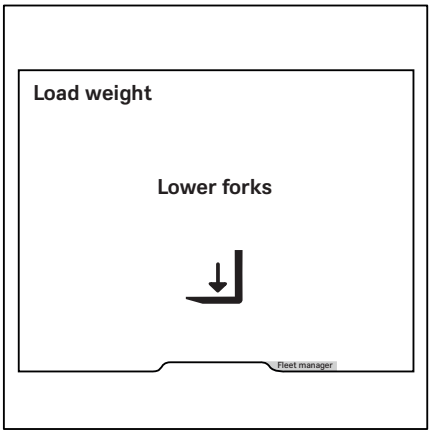

# Depressurising the hydraulic system

## Need to depressurise the hydraulic system

To enable additional hydraulic functions other than the basic functions to be used, the truck has plug connectors (1) on the lift mast.

Clamping and non-clamping attachments can be connected to these plug connectors.

- Non-clamping attachments are connected to the third hydraulic circuit via the plug connectors (1) on the fork carriage and are controlled via the "5th hydraulic function".

  If the truck is equipped with multi-lever operation, the attachments can also be controlled via the "6th hydraulic function".
- Clamping attachments are not controlled via the "5th/6th hydraulic function"

Attachments must be installed only by competent persons. The specifications provided by the manufacturer and supplier of the attachments must be observed during installation of the attachments.

Before changing attachments, the hydraulic system must be depressurised. This is done using a wizard on the display-operating unit.

If the truck has a "5th hydraulic function" or "6th hydraulic function", the hydraulic circuits of these functions must also be depressurised.

– Observe the following sections to depressurise the hydraulic system.

- "Wizard for depressurising the hydraulic system"
- "Depressurising the hydraulic system using ..." (see the respective operating device!)
- "Depressurising the hydraulic system using ... and the 5th function" (see the respective operating device!)
- "Special feature for clamping attachments"
- "Completing the depressurisation"

▷

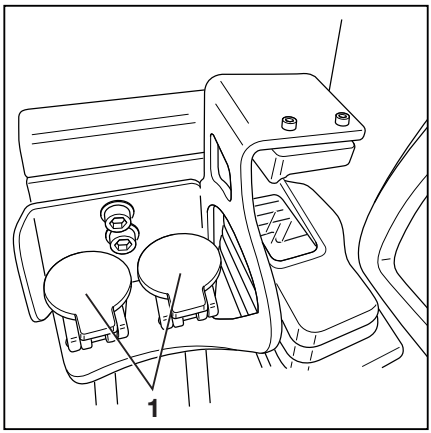


Plug connectors on the lift mast

## Wizard for depressurising the hydraulic system

The hydraulics are depressurised using a wizard on the display-operating unit.

If this function is required for daily operation, contact your authorised service centre. The authorised service centre can enable the function for the driver.

**NOTE**

*The wizard requires access authorisation for the fleet manager. Access to the settings menu is only available if the truck is at a standstill and the parking brake is applied. If the parking brake is released prematurely, the settings menu will close.*

– Set the load down, if necessary.

– Apply the parking brake.

### Starting the wizard

– Press the button.

– Press the softkey.

– Activate the "Access authorisation for the fleet manager".

– Press the `Service` softkey. ▷

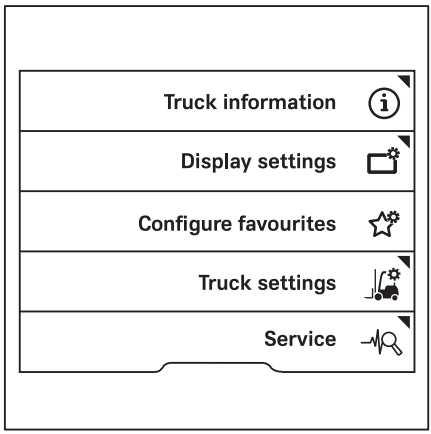

## Depressurising the hydraulic system

– Press the scroll keys △ ▽ until the `Relieve hydraulics` menu appears.

– Push the `Relieve hydraulics` softkey.

▷

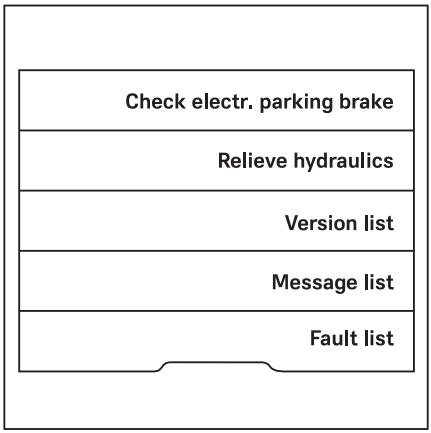


The following message appears: `Caution, the lift mast may move! !`

– To confirm, press the ☑ softkey.

Press the ☒ softkey to exit the wizard.

▷

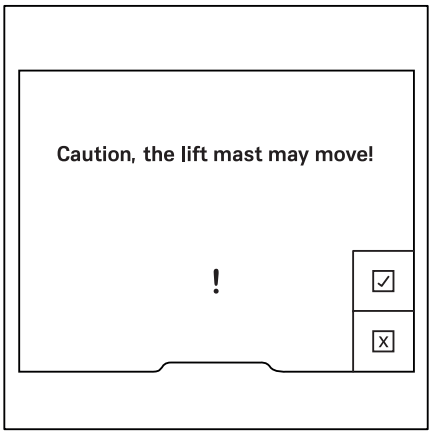

The following message appears: `Disengage all hydraulic axles, then switch off the truck !`

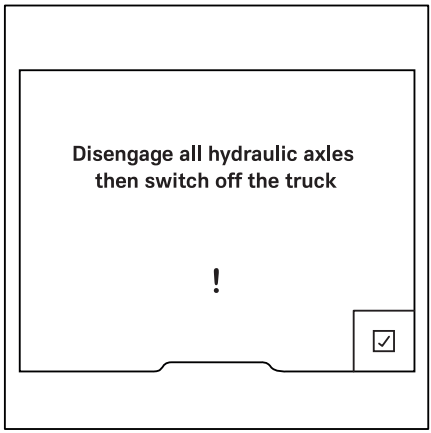


– Depressurise the hydraulics, see the relevant section for the respective operating devices.

**⚠ WARNING**

The movements of the load lift system present a risk of crushing!

During the depressurisation process, the fork carriage or the lift mast can move slightly.

– Do not reach into or stand below the components of the load lift system.

**NOTE**

*Do not move the steering wheel while depressurising the hydraulics. Otherwise the hydraulic system will build up pressure again. As soon as pressure has built up in the hydraulic system again, the function for relieving the hydraulics becomes inactive.*

## Depressurising the hydraulic system using multi-lever operation

– Start the "wizard for depressurising the hydraulic system".

### Depressurising the hydraulic circuits for the basic functions

The basic functions include the first four hydraulic functions. The basic functions are controlled via the first two hydraulic circuits.

The basic functions are:

- Lifting the fork carriage
- Lowering the fork carriage
- Tilting the lift mast forwards
- Tilting the lift mast backwards

– Push the operating levers (1, 2) once in the direction of the arrow until the end position is reached.

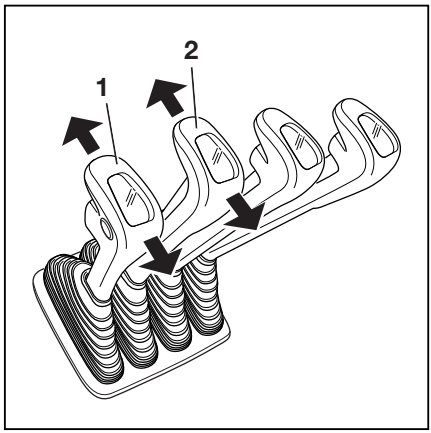

The hydraulic circuits of the basic functions are now depressurised.

### Depressurising the hydraulic circuits for the additional functions ▷

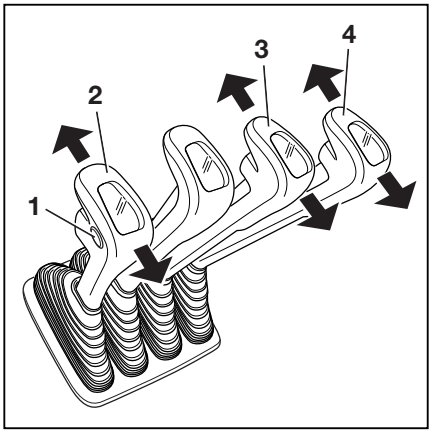


The additional features include features such as the sideshift and fork adjustment. Clamping attachments are also connected to these hydraulic circuits. These functions are controlled via hydraulic circuits three and four.

– Actuate the operating levers (3, 4) for controlling the additional functions once in the direction of the arrow until the end positions are reached.

The hydraulic circuits of the additional functions are now depressurised.

NOTE

*Depending on the equipment, the operating lever (2) can be assigned the sideshift and the fork adjustment functions.*

– In this case, press the button (1) and hold it down.

– Push the operating lever (2) once in the direction of the arrow until the end position is reached.

– Release the button (1).

The hydraulic circuits of the sideshift and fork adjustment are now depressurised. The plug connectors on the lift mast are depressurised.

### Completing the depressurisation

– To complete the depressurisation, observe the section entitled "Exiting the wizard".

## Depressurising the hydraulic system using multi-lever operation and the 5th and 6th function

If the truck is equipped with multi-lever operation, the attachments can also be controlled via the "5th hydraulic function" and "6th hydraulic function".

– Start the "wizard for depressurising the hydraulic system".

### Depressurising the hydraulic circuits for the "5th and 6th hydraulic function" ▷

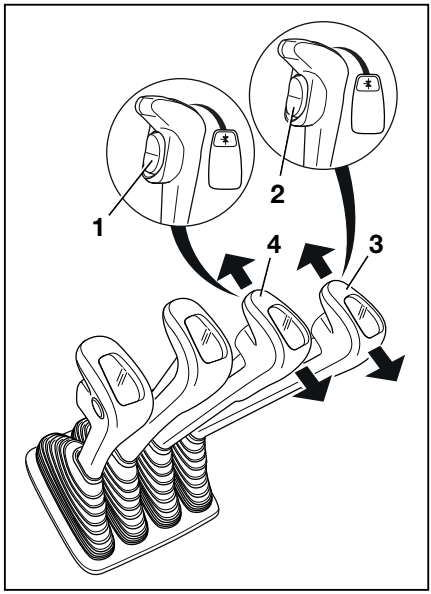


If the truck has a "5th and 6th hydraulic function", their hydraulic circuits must also be depressurised. The procedure is similar to the depressurisation of the hydraulic circuits for the basic functions and the additional functions. In addition, the hydraulic circuits are depressurised in the same way as the attachments are operated. The hydraulic circuits for the "5th and 6th hydraulic functions" are actuated via the corresponding buttons on the operating devices.

– Press the button (1) and hold it down.

– Push the operating lever (4) once in the direction of the arrow until the end position is reached.

The hydraulic circuit of the 5th hydraulic function is depressurised. The plug connectors on the lift mast are depressurised.

– Press the button (2) and hold it down.

– Push the operating lever (3) once in the direction of the arrow until the end position is reached.

The hydraulic circuit of the 6th hydraulic function is depressurised. The plug connectors on the lift mast are depressurised.

### Completing the depressurisation

– To complete the depressurisation, observe the section entitled "Exiting the wizard".

## Depressurising the hydraulic system using a double mini-lever

– Start the "wizard for depressurising the hydraulic system".

### Depressurising the hydraulic circuits for the basic functions ▷

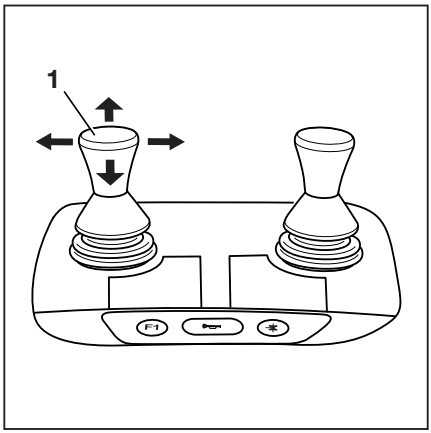


The basic functions include the first four hydraulic functions. The basic functions are controlled via the first two hydraulic circuits.

The basic functions are:

- Lifting the fork carriage
- Lowering the fork carriage
- Tilting the lift mast forwards
- Tilting the lift mast backwards

– Push the cross lever (1) once in the direction of the arrow until the end position is reached.

The hydraulic circuits of the basic functions are now depressurised.

### Depressurising the hydraulic circuits for the additional functions ▷

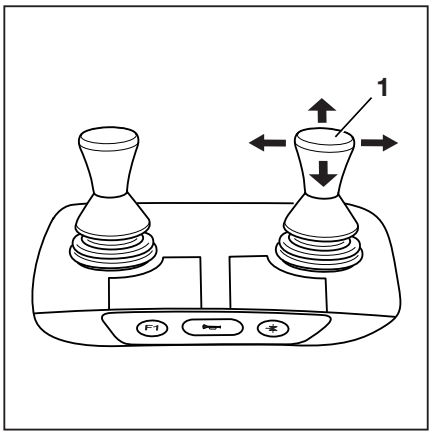


The additional features include features such as the sideshift and fork adjustment. Clamping attachments are also connected to these hydraulic circuits. These functions are controlled via hydraulic circuits three and four.

– Actuate the cross lever (1) for controlling the additional functions once in the direction of the arrow until the end position is reached.

The hydraulic circuits of the additional functions are now depressurised.

### Completing the depressurisation

– To complete the depressurisation, observe the section entitled "Exiting the wizard".

## Depressurising the hydraulic system using the double mini-lever and the 5th function

If the truck is equipped with the double mini-lever, the attachments can also be controlled via the "5th hydraulic function".

– Start the "wizard for depressurising the hydraulic system".

### Depressurising the hydraulic circuits for the "5th hydraulic function"

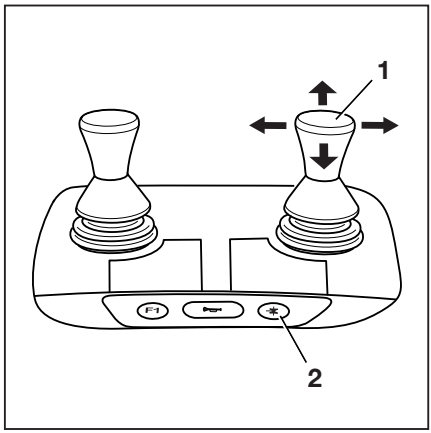


If the truck has a "5th hydraulic function", the hydraulic circuit of this function must also be depressurised. The procedure is similar to the depressurisation of the hydraulic circuits for the basic functions and the additional functions. In addition, the hydraulic circuit is depressurised in the same way as the attachments are operated. The hydraulic circuit for the "5th hydraulic function" is actuated using the function key for the "5th function" (2).

– Actuate the function key for the "5th function" (2).

The LED for the "5th function" lights up.

– Push the cross lever (1) once in the direction of the arrow until the end position is reached.

The hydraulic circuit of the 5th hydraulic function is depressurised. The plug connectors on the lift mast are depressurised.

– Actuate the function key for the "5th function" (2).

The LED for the "5th function" goes out.

### Completing the depressurisation

– To complete the depressurisation, observe the section entitled "Exiting the wizard".

## Depressurising the hydraulic system using a triple mini-lever

– Start the "wizard for depressurising the hydraulic system".

### Depressurising the hydraulic circuits for the basic functions ▷

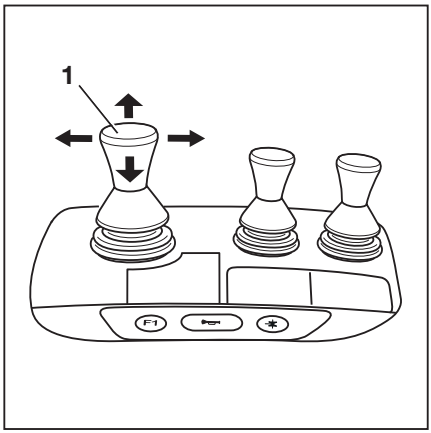


The basic functions include the first four hydraulic functions. The basic functions are controlled via the first two hydraulic circuits.

The basic functions are:

- Lifting the fork carriage
- Lowering the fork carriage
- Tilting the lift mast forwards
- Tilting the lift mast backwards

– Push the cross lever (1) once in the direction of the arrow until the end position is reached.

The hydraulic circuits of the basic functions are now depressurised.

### Depressurising the hydraulic circuits for the additional functions ▷

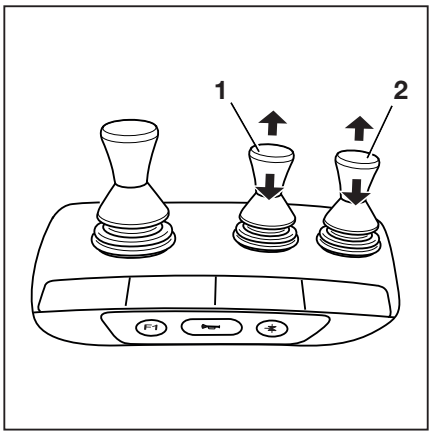


The additional features include features such as the sideshift and fork adjustment. Clamping attachments are also connected to these hydraulic circuits. These functions are controlled via hydraulic circuits three and four.

– Actuate the operating levers (1, 2) for controlling the additional functions once in the direction of the arrow until the end positions are reached.

The hydraulic circuits of the additional functions are now depressurised.

### Completing the depressurisation

– To complete the depressurisation, observe the section entitled "Exiting the wizard".

## Depressurising the hydraulic system using the triple mini-lever and the 5th function

If the truck is equipped with the triple mini-lever, the attachments can also be controlled via the "5th hydraulic function".

– Start the "wizard for depressurising the hydraulic system".

### Depressurising the hydraulic circuits for the "5th hydraulic function"

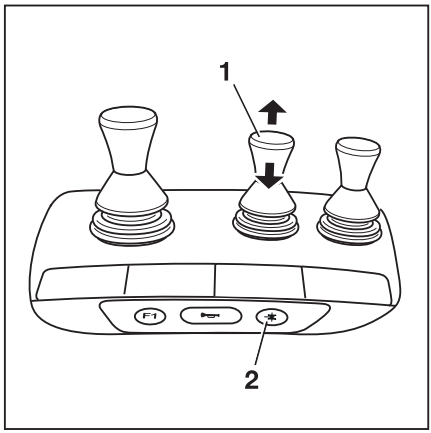


If the truck has a "5th hydraulic function", the hydraulic circuit of this function must also be depressurised. The procedure is similar to the depressurisation of the hydraulic circuits for the basic functions and the additional functions. In addition, the hydraulic circuit is depressurised in the same way as the attachments are operated. The hydraulic circuit for the "5th hydraulic function" is actuated using the function key for the "5th function" (2).

– Actuate the function key for the "5th function" (2).

The LED for the "5th function" lights up.

– Push the operating lever (1) once in the direction of the arrow until the end position is reached.

The hydraulic circuit of the 5th hydraulic function is depressurised. The plug connectors on the lift mast are depressurised.

– Actuate the function key for the "5th function" (2).

The LED for the "5th function" goes out.

### Completing the depressurisation

– To complete the depressurisation, observe the section entitled "Exiting the wizard".

## Depressurising the hydraulic system using a quadruple mini-lever

– Start the "wizard for depressurising the hydraulic system".

### Depressurising the hydraulic circuits for the basic functions ▷

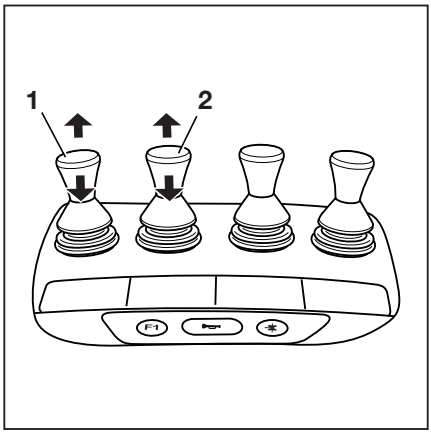


The basic functions include the first four hydraulic functions. The basic functions are controlled via the first two hydraulic circuits.

The basic functions are:

- Lifting the fork carriage
- Lowering the fork carriage
- Tilting the lift mast forwards
- Tilting the lift mast backwards

– Push the operating levers (1, 2) once in the direction of the arrow until the end position is reached.

The hydraulic circuits of the basic functions are now depressurised.

### Depressurising the hydraulic circuits for the additional functions ▷

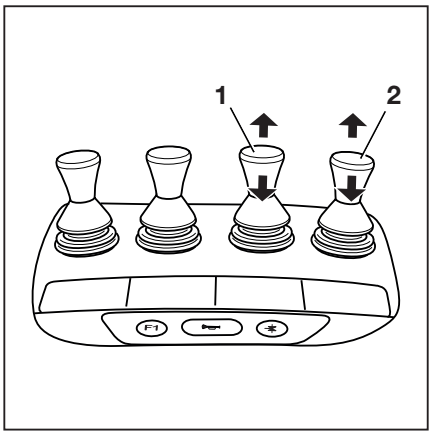


The additional features include features such as the sideshift and fork adjustment. Clamping attachments are also connected to these hydraulic circuits. These functions are controlled via hydraulic circuits three and four.

– Actuate the operating levers (1, 2) for controlling the additional functions once in the direction of the arrow until the end positions are reached.

The hydraulic circuits of the additional functions are now depressurised.

### Completing the depressurisation

– To complete the depressurisation, observe the section entitled "Exiting the wizard".

## Depressurising the hydraulic system using the quadruple mini-lever and the 5th function

If the truck is equipped with the quadruple mini-lever, the attachments can also be controlled via the "5th hydraulic function".

– Start the "wizard for depressurising the hydraulic system".

### Depressurising the hydraulic circuits for the "5th hydraulic function" ▷

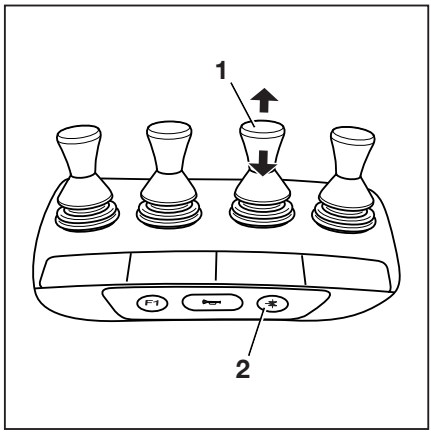


If the truck has a "5th hydraulic function", the hydraulic circuit of this function must also be depressurised. The procedure is similar to the depressurisation of the hydraulic circuits for the basic functions and the additional functions. In addition, the hydraulic circuit is depressurised in the same way as the attachments are operated. The hydraulic circuit for the "5th hydraulic function" is actuated using the function key for the "5th function" (2).

– Actuate the function key for the "5th function" (2).

The LED for the "5th function" lights up.

– Push the operating lever (1) once in the direction of the arrow until the end position is reached.

The hydraulic circuit of the 5th hydraulic function is depressurised. The plug connectors on the lift mast are depressurised.

– Actuate the function key for the "5th function" (2).

The LED for the "5th function" goes out.

### Completing the depressurisation

– To complete the depressurisation, observe the section entitled "Exiting the wizard".

## Depressurising the hydraulic system using the Fingertip

– Start the "wizard for depressurising the hydraulic system".

### Depressurising the hydraulic circuits for the basic functions ▷

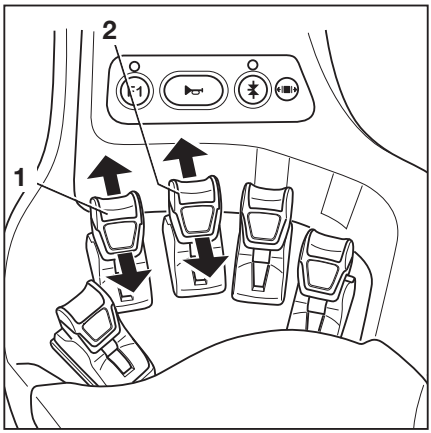


The basic functions include the first four hydraulic functions. The basic functions are controlled via the first two hydraulic circuits.

The basic functions are:

- Lifting the fork carriage
- Lowering the fork carriage
- Tilting the lift mast forwards
- Tilting the lift mast backwards

– Push the operating levers (1, 2) once in the direction of the arrow until the end position is reached.

The hydraulic circuits of the basic functions are now depressurised.

### Depressurising the hydraulic circuits for the additional functions ▷

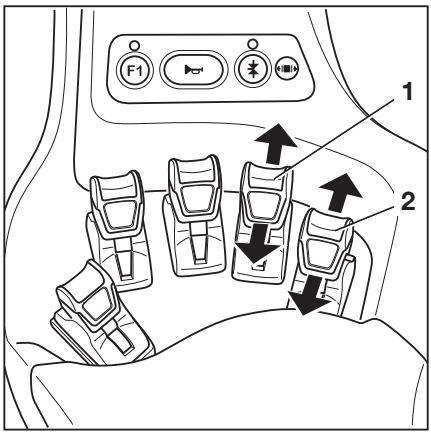


The additional features include features such as the sideshift and fork adjustment. Clamping attachments are also connected to these hydraulic circuits. These functions are controlled via hydraulic circuits three and four.

– Actuate the operating levers (1, 2) for controlling the additional functions once in the direction of the arrow until the end positions are reached.

The hydraulic circuits of the additional functions are now depressurised.

### Completing the depressurisation

– To complete the depressurisation, observe the section entitled "Exiting the wizard".

## Depressurising the hydraulic system using the Fingertip and the 5th function

If the truck is equipped with the Fingertip, the attachments can also be controlled via the "5th hydraulic function".

– Start the "wizard for depressurising the hydraulic system".

### Depressurising the hydraulic circuits for the "5th hydraulic function"

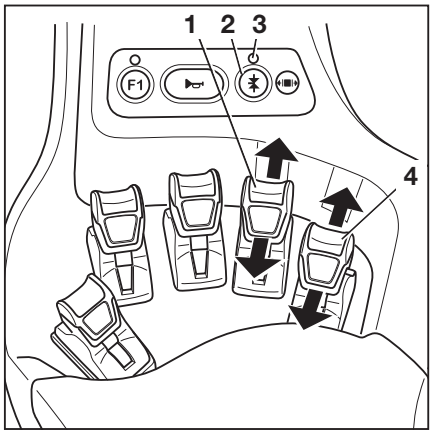


If the truck has a "5th hydraulic function", the hydraulic circuit of this function must also be depressurised. The procedure is similar to the depressurisation of the hydraulic circuits for the basic functions and the additional functions. In addition, the hydraulic circuit is depressurised in the same way as the attachments are operated. The hydraulic circuit for the "5th hydraulic function" is actuated using the function key for the "5th function" (2). The operating levers (1) or (4) can be assigned the 5th function. Observe the relevant pictogram for the 5th function.

– Actuate the function key for the "5th function" (2).

The LED for the "5th function" (3) lights up.

– Push the operating levers (1) or (4) once in the direction of the arrow until the end position is reached.

The hydraulic circuit of the 5th hydraulic function is depressurised. The plug connectors on the lift mast are depressurised.

– Actuate the function key for the "5th function" (2).

The LED for the "5th function" (3) goes out.

### Completing the depressurisation

– To complete the depressurisation, observe the section entitled "Exiting the wizard".

## Depressurising the hydraulic system using the Joystick 4Plus

– Start the "wizard for depressurising the hydraulic system".

### Depressurising the hydraulic circuits for the basic functions ▷

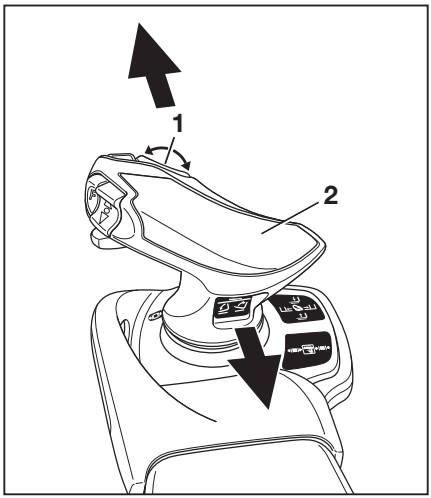


The basic functions include the first four hydraulic functions. The basic functions are controlled via the first two hydraulic circuits.

The basic functions are:

- Lifting the fork carriage
- Lowering the fork carriage
- Tilting the lift mast forwards
- Tilting the lift mast backwards

– Push the Joystick 4Plus (2) once in the direction of the arrow until the end position is reached.

– Push the horizontal rocker button (1) once in the direction of the arrow.

The hydraulic circuits of the basic functions are now depressurised.

### Depressurising the hydraulic circuits for the additional functions ▷

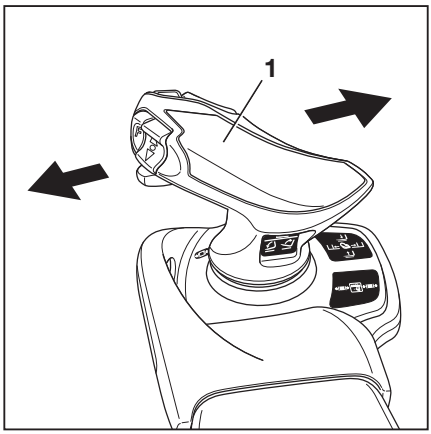


The additional features include features such as the sideshift and fork adjustment. Clamping attachments are also connected to these hydraulic circuits. These functions are controlled via hydraulic circuits three and four.

Push the Joystick 4Plus (1) once in the direction of the arrow until the end position is reached.

The hydraulic circuits of the additional functions are now depressurised.

### Completing the depressurisation

– To complete the depressurisation, observe the section entitled "Exiting the wizard".

## Depressurising the hydraulic system using the Joystick 4Plus and the 5th function

If the truck is equipped with the Joystick 4Plus, the attachments can also be controlled via the "5th hydraulic function".

– Start the "wizard for depressurising the hydraulic system".

### Depressurising the hydraulic circuits for the "5th hydraulic function"

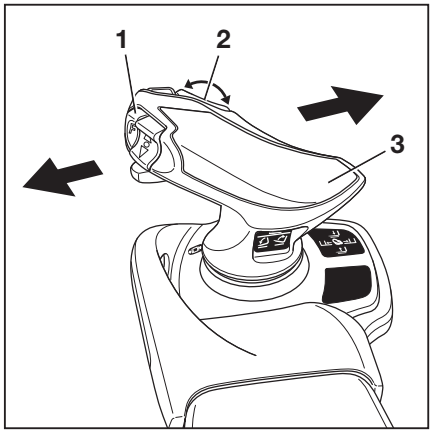


If the truck has a "5th hydraulic function", the hydraulic circuit of this function must also be depressurised. The procedure is similar to the depressurisation of the hydraulic circuits for the basic functions and the additional functions. In addition, the hydraulic circuit is depressurised in the same way as the attachments are operated. The hydraulic circuit for the "5th hydraulic function" is actuated using the shift key "F" (1). The Joystick 4Plus (3) or the horizontal rocker button (2) can be assigned the 5th function. Observe the relevant pictogram for the 5th function.

– Press and hold shift key "F" (1).

– Push the Joystick 4Plus (3) once in the direction of the arrow until the end position is reached.

Push the horizontal rocker button (2) once in the direction of the arrow.

The hydraulic circuit of the 5th hydraulic function is depressurised. The plug connectors on the lift mast are depressurised.

– Release shift key "F" (1).

### Completing the depressurisation

– To complete the depressurisation, observe the section entitled "Exiting the wizard".

## Special feature for clamping attachments

If a clamping attachment is fitted, please observe the following:

- Depressurising the hydraulic circuit for clamping attachments is performed in the same way as opening and closing the clamp.
- Loosen the clamp locking mechanism; see the relevant sections related to the clamp locking mechanism.

- Push the operating device once in the "Open" direction.
- Push the operating device once in the "Close" direction.

– Observe the section entitled "Clamp locking mechanism (variant)" in the chapter entitled "Attachments".

## Exiting the wizard

– After the hydraulics have been depressurised, press the softkey ☑ to confirm.

The wizard for depressurising the hydraulics is switched off. The truck is ready for operation.

# Attachments

## Fitting attachments

If the truck is equipped with an integrated attachment (variant) at the factory, observe the specifications in the STILL operating instructions for integrated attachments.

If attachments are fitted at the place of use, observe the specifications in the operating instructions from the attachment manufacturer.

If an attachment is not delivered together with the truck, observe the specifications from the manufacturer and the operating instructions from the attachment manufacturer.

Before initial commissioning, have the function of the attachment and the visibility from the driver's position with and without a load checked by a competent person. If the visibility is deemed insufficient, use visual aids, such as mirrors, a camera, a monitor system etc.

– Observe the following warning notices.

**⚠ DANGER**

**Risk of death from falling load!**

If attachments that hold the load by clamping it or exerting pressure on it do not have a second operating function (lock) to be activated, the load can work loose and fall off.

– Ensure that the second operating function (lock) to be activated is available.
– When retrofitting such attachments, also retrofit a second operating function (lock) to be activated.

**⚠ DANGER**

**Risk of death from falling load!**

When installing a clamp with an integrated sideshift function, ensure that the clamp does not open when the sideshift is actuated.

– Notify your authorised service centre before installation.
– Never reach into or climb on moving parts of the truck.

**⚠ WARNING**

Risk of accident due to incorrect labelling!

The use of attachments can cause accidents if the labelling is incorrect or missing.

If the truck is not fitted with an attachment-specific residual load capacity rating plate and if the operating devices are not marked with the relevant pictograms, the truck must not be used.

- Use only CE-certified attachments that have operating instructions and the required labels.
- In the United Kingdom, the attachments must also be UKCA certified and have the required labelling.
- Arrange for an attachment-specific residual load capacity rating plate to be fitted to the truck.
- Arrange for the operating devices to be re-labelled.
- Arrange for the authorised service centre to adjust the hydraulic system to the requirements of the attachment (e.g. adjust the pump motor speed).

**⚠ WARNING**

Risk of accident in the event of a steering failure!

Every time attachments are changed, some hydraulic oil can be lost.

If attachments are changed frequently, the hydraulic oil level can become too low.

With the lift mast extended, this low hydraulic oil level can lead to steering failures.

- If attachments are changed frequently, check the hydraulic oil level regularly and top up the hydraulic oil when necessary.

**NOTE**

*If the required labelling is not provided with the attachment, contact the authorised service centre promptly.*

## Alternating operation using an electrical switch valve

If non-integrated attachments for alternating operation are used in conjunction with an electrical switch valve for the fifth and sixth hydraulic function, the electrical switch valve must operate at 12 V.

- Contact the authorised service centre if necessary.

## Plug connectors on the lift mast

▷

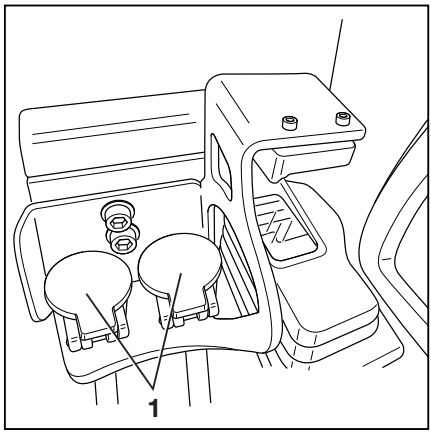


– Before fitting the attachment, depressurise the hydraulic system; see the chapter entitled "Depressurising the hydraulic system".

**⚠ CAUTION**

Risk of damage to components!

Open connections on the plug connectors (1) can become dirty. Dirt can enter the hydraulic system. The plug connectors can become stiff.

– Once the attachment has been disassembled, seal the plug connectors using the protective caps.

## Mounting attachments

Only competent persons are permitted to mount and connect the energy supply to the attachment.

– Observe the information provided by the manufacturer and supplier or sub-supplier of the attachment when doing so.

**NOTE**

*Please observe the definition of the following responsible person: "competent person".*

– Switch off the truck.

– Install the attachment.

– Switch on the truck.

– Check and ensure that all functions of the installed attachment are working properly.

## Load capacity with attachment

The permissible load capacity of the attachment and the permissible load (load capacity and load moment) of the truck must not be exceeded by the combination of the attachment and the payload. Adhere to the specifications of the manufacturer and supplier or sub-supplier of the attachment.

– Observe the residual load capacity rating plate; see the chapter entitled "Picking up a load using attachments".

## General instructions for controlling attachments

Attachments can be controlled via the first four hydraulic functions but also as a variant via the 5th or 6th function. The 5th or 6th function is activated via a button on the operating device and by moving the operating device or additional push buttons.

The way in which attachments (variant) are controlled depends on the operating devices included in the truck's equipment.

Possible equipment variants include:

- Multi-lever
- Multi-lever with a 5th or 6th function (variant)
- Double mini-lever
- Double mini-lever with a 5th function (variant)
- Triple mini-lever
- Triple mini-lever with a 5th function (variant)
- Quadruple mini-lever
- Quadruple mini-lever with a 5th function (variant)
- Fingertip
- Fingertip with a 5th function (variant)
- Joystick 4Plus
- Joystick 4Plus with a 5th function (variant)

– To control attachments, see the sections relating to the respective operating devices in this chapter.

**⚠ WARNING**

Use of attachments can give rise to additional hazards such as a change in the centre of gravity, additional danger areas etc.

Attachments must only be deployed for their intended use as described in the relevant operating instructions. Drivers must be taught how to operate the attachments.

Loads may only be picked up and transported with attachments if the loads are securely grasped and attached. If necessary, the loads must also be secured against slipping, rolling away, falling over, swinging and tipping over. Note that any change to the location of the load centre of gravity will affect the stability of the truck.

– Observe the capacity rating plate for the attachments being used.

NOTE

*If several hydraulic functions are used at the same time, these functions can influence each other. For example, if the fork carriage is raised and an attachment is operated at the same time, this may change the lifting speed or the operating speed of the attachment.*

NOTE

*Further variants and functions are available in addition to the functions described below. The directions of movement can be seen in the pictograms on the operating devices. All the attachments described fall into the category of equipment variants. An exact description of the respective movements or actions of the attachment fitted can be found in the relevant operating instructions.*

With fleet manager access authorisation (variant), the fleet manager can adjust the speed of the auxiliary hydraulics for attachments.

– See also the section entitled "Adjusting the hydraulic speed for attachments" in this chapter.

## Attachment example for the connection of the auxiliary hydraulics

NOTE

*The authorised service centre will tell you which attachments can be used with this truck.*

The connection of attachments to the auxiliary hydraulics is performed as per the diagram, as highlighted in the operating instructions for the attachment.

– Observe the "Information on the auxiliary hydraulics" in the "Technical data" chapter.

In the menu for the available hydraulic axles for attachments, the designation `Hydraulic axle` specifies the connection of the corresponding auxiliary hydraulics. See also the section entitled "Adjusting the hydraulic speed for attachments" in this chapter.

Attachment example for an attachment for adjustment of the fork arms ▷

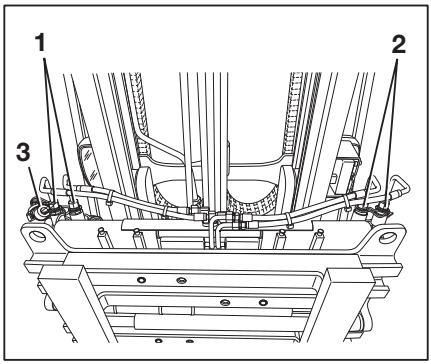


1 Auxiliary hydraulics 1
2 Auxiliary hydraulics 2
3 Electrical connection for switch valve 1 (two switch valves are possible)

If an attachment is connected to the auxiliary hydraulics 1 (1) and this attachment requires another function, this is referred to as the function of the auxiliary hydraulics 3.

There is an electrical connection (3) for the switch valve that is required for this purpose.

The same applies to the auxiliary hydraulics 4, which is fed from the auxiliary hydraulics 2 (2) and is implemented by an additional connection for a switch valve that is not shown here.

NOTE

*If one switch valve is used, the auxiliary hydraulic functions 1 & 3 and 2 & 4 that are supplied by this switch valve cannot be operated simultaneously. The switch valve supplies either auxiliary hydraulics 1 & 3 or 2 & 4.*

## Adjusting the hydraulic speed for attachments

If different attachments are mounted, the fleet manager can adjust the hydraulic speed for attachments and thus the flow rate of hydraulic oil. Obtain the necessary values from the operating instructions for the attachment. The authorised service centre will help to make the correct adjustments.

– Observe the "Information on the auxiliary hydraulics" in the "Technical data" chapter.

The "Information on the auxiliary hydraulics" differs depending on the truck. Take this into consideration when selecting the attachment.

NOTE

*The adjustment procedure requires access authorisation for the fleet manager. Access to the settings menu is only available if the truck is at a standstill and the parking brake is applied. If the parking brake is released prematurely, the settings menu will close.*

– Apply the parking brake.

– Press the button.

– Press the softkey.

– Activate the "Access authorisation for the fleet manager".

– Press the `Auxiliary hydraulics` softkey.

This menu lists all the available hydraulic axles for attachments.

– Refer to the operating instructions of the attachment to determine which hydraulic axle is occupied by the attachment.

The authorised service centre will help you determine the axles.

## Setting the revolution speed

– Push the softkey for the hydraulic axle to be configured.

▷

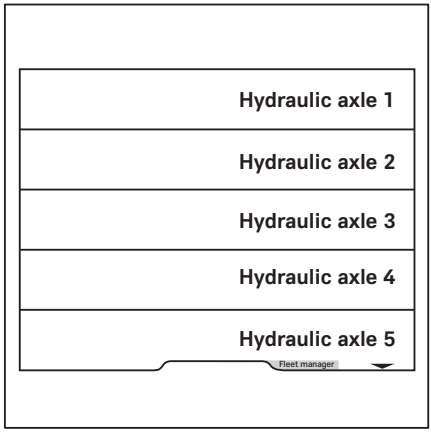

This menu indicates the supply flow. ▷

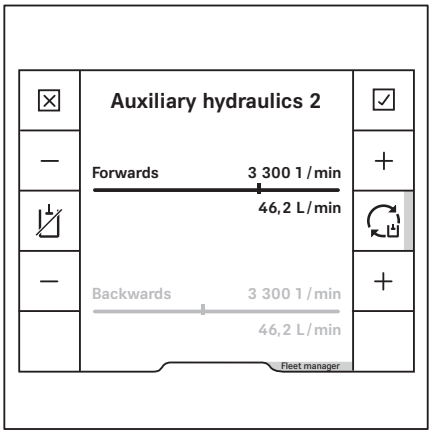


The return flow is shown in a lighter colour.

- The currently set speed of the hydraulic pump is given in `rpm`
- The currently set supply flow rate is given in `L/min`.

**NOTE**

*The supply flow rate depends on the speed.*

The return flow automatically adjusts to the set supply flow. When the orange activation bar next to the softkey lights up, synchronisation takes place automatically. The return flow is shown only dimly on the display.

To adjust the revolution speed, press the + or − softkey.

– To save the setting, press the ☑ softkey.

The settings are saved.

– To cancel the setting, press the ☒ softkey.

The settings return to the most recently set value.

## Locking the flow rate

You can also lock the hydraulic oil flow rate in full.

– To do so, press the softkey.

The hydraulic oil flow for this hydraulic axle is locked.

## Setting the return flow rate separately

Depending on the attachment, the return flow rate may need to be set separately.

– To do so, press the softkey.

The return flow is displayed in addition to the supply flow at full brightness.

To adjust the revolution speed, press the + or − softkey.

– To save the setting, press the ☑ softkey.

The settings are saved.

– To cancel the setting, press the ☒ softkey.

The settings return to the most recently set value.

▷

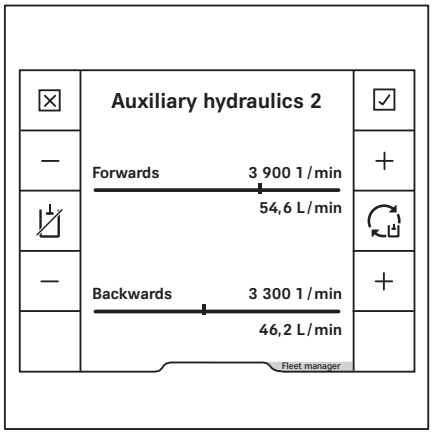


## Clamp locking mechanism (variant)

This truck can be fitted with a clamp locking mechanism for clamping attachments. The clamp locking mechanism prevents the clamp from opening unintentionally if the operating function is inadvertently triggered.

**⚠ DANGER**

**If the correct function of the clamp locking mechanism is not guaranteed, there is a risk to life from a falling load!**

If other attachments in addition to the clamp are used on this truck, the clamp locking mechanism must be reassigned to the corresponding operating device every time the clamp is reassembled.

– Make sure that the authorised service centre reassigns the function of the clamp locking mechanism to the corresponding operating device.

– Make sure that the additional clamp locking mechanism function is available.

– Observe the section entitled "Fitting attachments".

**NOTE**

*For technical reasons, clamping attachments* ***must not*** *be controlled via the "5th function".*

The sections entitled "Controlling attachments using ..." describe how the clamp locking mechanism is operated.

– See the section concerning the relevant operating device.

## Controlling attachments using multi-lever operation

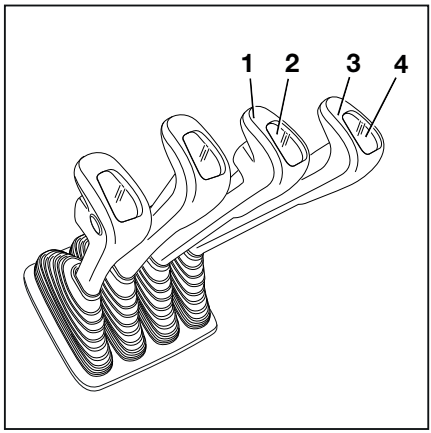


In this version, the attachments (variant) are controlled using the operating levers (1, 3). The pictograms for the hydraulic functions (2, 4) are affixed to the operating levers.

– Observe the pictograms (2) or (4).

The pictograms are arranged according to the directions of movement of the operating lever (1) or (3).

The following applies:

– Move the operating lever forwards.

The attachment moves in the direction of movement shown in the upper part of the pictogram.

– Move the operating lever backwards.

The attachment moves in the direction of movement shown in the lower part of the pictogram.

– Note the following attachment functions and pictograms.

| Pictogram | Attachment function |
|---|---|
| | Move the side shift frame or fork forwards |
| | Move the side shift frame or fork backwards |
| | Move the sideshift to the left |
| | Move sideshift to the right |
| | Adjust fork arms: open |
| | Adjust fork arms: close |
| | Push off the load |
| | Pull in the load |
| | Rotate to the left |
| | Rotate to the right |
| | Tip shovel over |
| | Tip shovel back |
| | Swivel the fork to the left |
| | Swivel the fork to the right |

NOTE

*The pictograms are affixed according to the attachment fitted at the factory. If an attachment with different functions is fitted, the authorised service centre must check that the pictograms bear the correct representation and must change them if necessary.*

## Clamp locking mechanism

NOTE

*For technical reasons, no clamp locking mechanism is available for the multi-lever operating device.*

## Controlling attachments using multi-lever operation and the 5th and 6th function

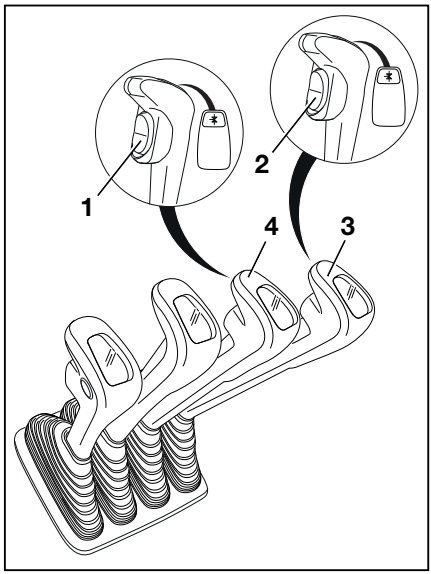


The function keys for the "5th and 6th function" (1, 2) and the operating levers (3, 4) are used to control the "5th function" or the "6th function".

The central and bottom parts of the pictograms on each operating lever show the function that is activated by that lever. The top part of the pictogram shows that the attachment is equipped with the "5th function" or the "6th function".

The following applies:

– Move the operating lever (3, 4) forwards.

The attachment moves in the direction of movement shown in the central part of the pictogram.

– Move the operating lever (3, 4) backwards.

The attachment moves in the direction of movement shown in the lower part of the pictogram.

– Press and hold the switch (1).

The additional function of the attachment is activated and can be controlled as the "5th function" with the operating lever (4).

NOTE

*The movement/action of the "5th function" can be found in the operating instructions of the attachment that is fitted.*

– Press and hold the switch (2).

The additional function of the attachment is activated and can be controlled as the "5th function" or "6th function" with the operating lever (3).

NOTE

*The movement/action of the "5th function" or "6th function" can be found in the operating instructions of the attachment that is fitted.*

– Note the following attachment functions and pictograms.

| Picto-gram | Attachment function |
|---|---|
| | Move the side shift frame or fork forwards |
| | Move the side shift frame or fork backwards |
| | Move the sideshift to the left |
| | Move sideshift to the right |
| | Adjust fork arms: open |
| | Adjust fork arms: close |
| | Push off the load |
| | Pull in the load |
| | Rotate to the left |
| | Rotate to the right |
| | Tip shovel over |
| | Tip shovel back |
| | Swivel the fork to the left |
| | Swivel the fork to the right |

NOTE

*The pictograms are affixed according to the attachment fitted at the factory. If an attachment with different functions is fitted, the authorised service centre must check that the pictograms bear the correct representation and must change them if necessary. If the attachment is known, the relevant symbol is stuck on the panelling in front of the corresponding operating lever.*

## Controlling attachments using a double mini-lever ▷

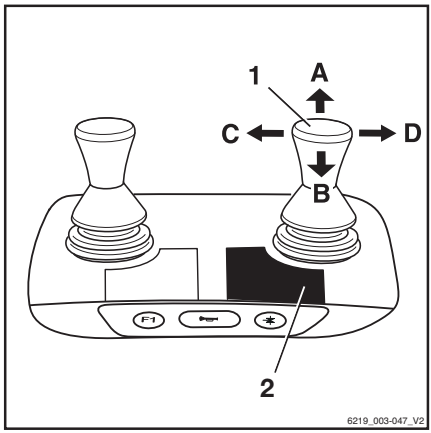


In this version, the attachments (variant) are controlled using the "attachments" cross lever (1). The adhesive label bearing the pictograms for the hydraulic functions (2) is affixed at the designated point.

– If the adhesive label becomes illegible or is missing, please contact your authorised service centre.

– Observe the pictograms for the attachment functions on the adhesive label (2).

The pictograms on the "attachments" cross lever (1) show the respective functions that are activated by this lever.

The pictograms are arranged according to the direction of movement of the "attachments" cross lever (1).

The following applies:

– Move the "attachments" cross lever(1) in the direction of arrow (A), (B), (C) or (D).

The attachment moves accordingly in the directions (A), (B), (C) or (D) as shown in the pictogram.

| Pictogram | Attachment function |
|---|---|
| | Move the side shift frame or fork forwards |
| | Move the side shift frame or fork backwards |
| | Move the sideshift to the left |
| | Move sideshift to the right |
| | Adjust fork arms: open |
| | Adjust fork arms: close |
| | Release load retainer |
| | Clamp load retainer |
| | Open clamps |
| | Close clamps |
| | Rotate to the left |
| | Rotate to the right |
| | Tip shovel over |
| | Tip shovel back |

NOTE

*The pictograms are affixed according to the attachment fitted at the factory. If an attachment with different functions is fitted, the authorised service centre must check that the pictograms bear the correct representation and must change them if necessary.*

## Clamp locking mechanism

▷

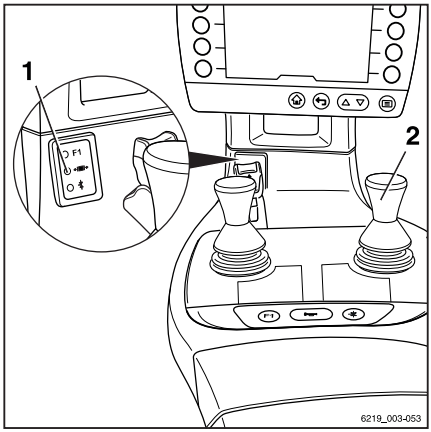


– To release the clamp locking mechanism, push the operating lever (2) forwards.

The clamp locking mechanism is released. The LED for the "clamp release" (1) lights up and remains lit while the clamp locking mechanism is released.

NOTE

*The hydraulic function for opening the clamp is available for one second after the clamp locking mechanism is released. After one second, the clamp locking mechanism is automatically reactivated.*

– To open the clamp, push the operating lever (2) forwards again.

It is not necessary to release the clamp locking mechanism in order to close the clamp.

– To close the clamp, pull the operating lever (2) backwards.

## Controlling attachments using the double mini-lever and the 5th function

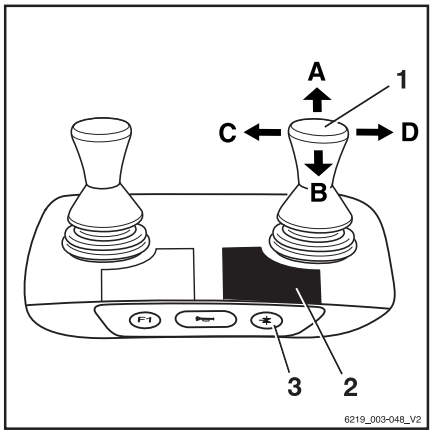


NOTE

*For technical reasons, clamping attachments **must not** be controlled via the "5th function".*

The function key for the "5th function" (3) and the cross lever (1) are used to control the "5th function".

The adhesive label bearing the pictograms for the hydraulic functions (2) is affixed at the designated point.

– If the adhesive label becomes illegible or is missing, please contact your authorised service centre.

– Observe the pictograms for the attachment functions on the adhesive label (2).

The pictograms on the "attachments" cross lever show the respective functions that are activated by this lever.

The following applies:

– Actuate the function key for the "5th function" (3).

The LED for the "5th function" lights up.

– Move the "attachments" cross lever (1) in the direction of the arrow (A), (B), (C) or (D).

The attachment moves accordingly in the directions (A), (B), (C) or (D) as shown in the pictogram.

Example using the pictograms for configuration (1):

If the "attachments" cross lever (1) is moved in the direction of the arrow (A), the fork is extended.

If the function key for the "5th function" (3) is actuated and the "attachments" cross lever (1) is moved in the direction of the arrow (A), the fork arms open.

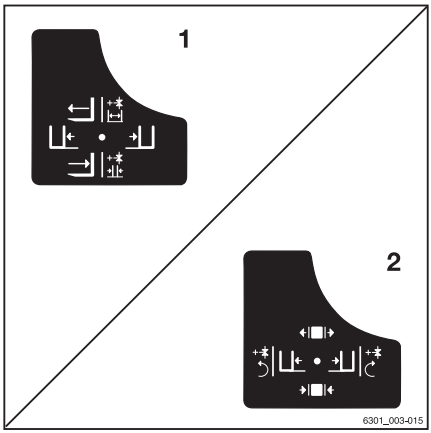


| Pictogram | Attachment function |
|---|---|
| | Auxiliary hydraulics "5th function" |
| | Move the side shift frame or fork forwards |
| | Move the side shift frame or fork backwards |
| | Move the sideshift to the left |
| | Move sideshift to the right |
| | Adjust fork arms: open |
| | Adjust fork arms: close |
| | Rotate to the left |
| | Rotate to the right |

NOTE

*The pictograms are affixed according to the attachment fitted at the factory. If an attachment with different functions is fitted, the authorised service centre must check that the pictograms bear the correct representation and must change them if necessary.*

## Controlling attachments using a triple mini-lever ▷

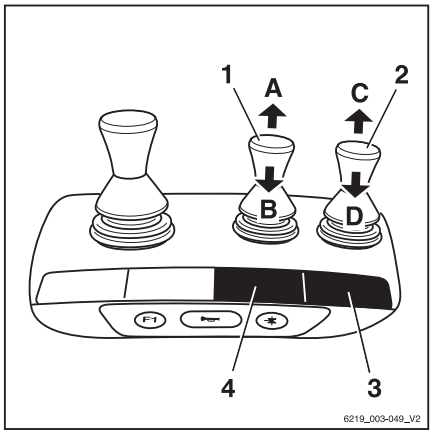


In this version, the attachments (variant) are controlled using the operating levers (1, 2). The adhesive label bearing the pictograms for the hydraulic functions (3) for the operating lever (2) and the adhesive label (4) for the operating lever (1) are affixed at the designated points.

– If the adhesive labels become illegible or are missing, please contact your authorised service centre.

– Observe the pictograms for the attachment functions on the adhesive labels (3, 4).

The pictograms on the operating levers show the respective functions that are activated by these levers.

The following applies:

– Move the operating lever (1) in the direction of the arrow (A) or (B).

The attachment moves accordingly in the directions (A) or (B) as shown in the pictogram.

– Move the operating lever (2) in the direction of the arrow (C) or (D).

The attachment moves accordingly in the directions (C) or (D) as shown in the pictogram.

| Pictogram | Attachment function |
|---|---|
| | Move the side shift frame or fork forwards |
| | Move the side shift frame or fork backwards |
| | Move the sideshift to the left |
| | Move sideshift to the right |
| | Adjust fork arms: open |
| | Adjust fork arms: close |
| | Release load retainer |
| | Clamp load retainer |
| | Open clamps |
| | Close clamps |
| | Rotate to the left |
| | Rotate to the right |

| Picto-gram | Attachment function |
|---|---|
| | Tip shovel over |
| | Tip shovel back |

NOTE

*The pictograms are affixed according to the attachment fitted at the factory. If an attachment with different functions is fitted, the authorised service centre must check that the pictograms bear the correct representation and must change them if necessary.*

## Clamp locking mechanism

▷

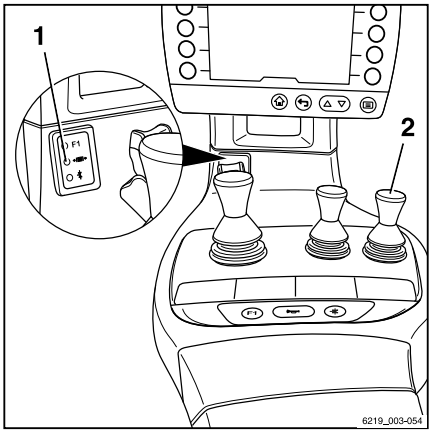


– To release the clamp locking mechanism, push the operating lever (2) forwards.

The clamp locking mechanism is released. The LED for the "clamp release" (1) lights up and remains lit while the clamp locking mechanism is released.

NOTE

*The hydraulic function for opening the clamp is available for one second after the clamp locking mechanism is released. After one second, the clamp locking mechanism is automatically reactivated.*

– To open the clamp, push the operating lever (2) forwards again.

It is not necessary to release the clamp locking mechanism in order to close the clamp.

– To close the clamp, pull the operating lever (2) backwards.

## Controlling attachments using the triple mini-lever and the 5th function

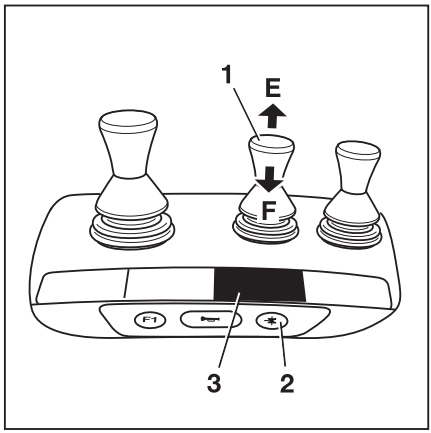


NOTE

*For technical reasons, clamping attachments* ***must not*** *be controlled via the "5th function".*

The function key for the "5th function" (2) and the operating lever (1) are used to control the "5th function".

The adhesive label bearing the pictograms for the hydraulic functions (3) is affixed at the designated point.

– If the adhesive label becomes illegible or is missing, please contact your authorised service centre.

– Observe the pictograms for the attachment functions on the adhesive label (3).

The pictograms on the operating lever show the respective functions that are activated by this lever.

The following applies:

– Actuate the function key for the "5th function" (2).

The LED for the "5th function" ✱ lights up.

– Move the operating lever (1) in the direction (E) or (F).

The attachment moves accordingly in the directions (E) or (F) as shown in the pictogram.

Example using the pictograms for configuration (1):

If the operating lever (1) is moved in the direction of the arrow (E), the sideshift moves to the left.

If the function key for the "5th function" (2) is actuated and the operating lever (1) is moved in the direction of the arrow (E), the fork arms open.

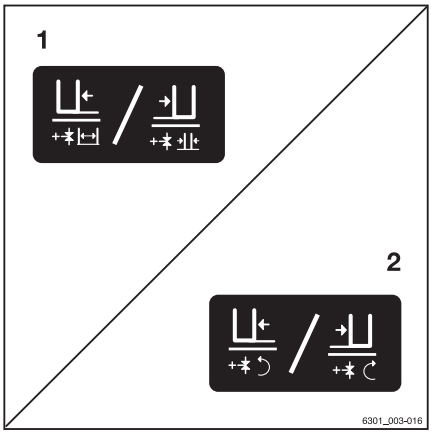


| Pictogram | Attachment function |
|---|---|
| | Auxiliary hydraulics "5th function" |
| | Move the sideshift to the left |
| | Move sideshift to the right |
| | Adjust fork arms: open |
| | Adjust fork arms: close |
| | Rotate to the left |
| | Rotate to the right |

NOTE

*The pictograms are affixed according to the attachment fitted at the factory. If an attachment with different functions is fitted, the authorised service centre must check that the pictograms bear the correct representation and must change them if necessary.*

## Controlling attachments using a quadruple mini-lever ▷

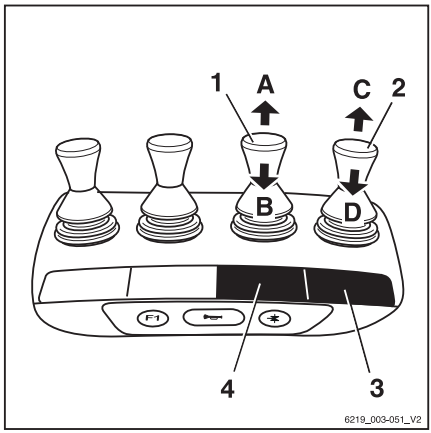


In this version, the attachments (variant) are controlled using the operating levers (1, 2). The adhesive label bearing the pictograms for the hydraulic functions (3) for the operating lever (2) and the adhesive label (4) for the operating lever (1) are affixed at the designated points.

– If the adhesive labels become illegible or are missing, please contact your authorised service centre.

– Observe the pictograms for the attachment functions on the adhesive labels (3, 4).

The pictograms on the operating levers show the respective functions that are activated by these levers.

The following applies:

– Move the operating lever (1) in the direction of the arrow (A) or (B).

The attachment moves accordingly in the directions (A) or (B) as shown in the pictogram.

– Move the operating lever (2) in the direction of the arrow (C) or (D).

The attachment moves accordingly in the directions (C) or (D) as shown in the pictogram.

| Pictogram | Attachment function |
|---|---|
| | Move the side shift frame or fork forwards |
| | Move the side shift frame or fork backwards |
| | Move the sideshift to the left |
| | Move sideshift to the right |
| | Adjust fork arms: open |
| | Adjust fork arms: close |
| | Release load retainer |
| | Clamp load retainer |
| | Open clamps |
| | Close clamps |
| | Rotate to the left |
| | Rotate to the right |

| Picto-gram | Attachment function |
|---|---|
| | Tip shovel over |
| | Tip shovel back |

NOTE

*The pictograms are affixed according to the attachment fitted at the factory. If an attachment with different functions is fitted, the authorised service centre must check that the pictograms bear the correct representation and must change them if necessary.*

## Clamp locking mechanism

▷

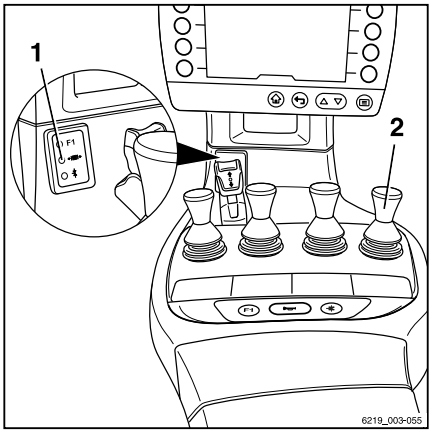


– To release the clamp locking mechanism, push the operating lever (2) forwards.

The clamp locking mechanism is released. The LED for the "clamp release" (1) lights up and remains lit while the clamp locking mechanism is released.

NOTE

*The hydraulic function for opening the clamp is available for one second after the clamp locking mechanism is released. After one second, the clamp locking mechanism is automatically reactivated.*

– To open the clamp, push the operating lever (2) forwards again.

It is not necessary to release the clamp locking mechanism in order to close the clamp.

– To close the clamp, pull the operating lever (2) backwards.

## Controlling attachments using the quadruple mini-lever and the 5th function

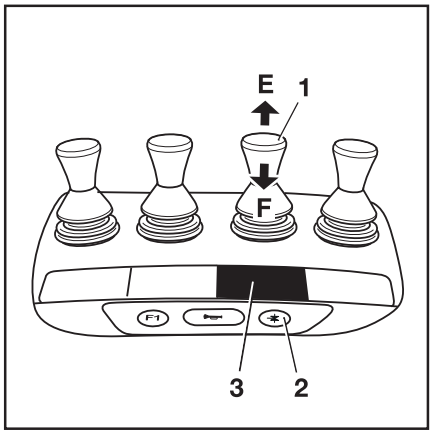


NOTE

*For technical reasons, clamping attachments* ***must not*** *be controlled via the "5th function".*

The function key for the "5th function" (2) and the operating lever (1) are used to control the "5th function".

The adhesive label bearing the pictograms for the hydraulic functions (3) is affixed at the designated point.

– If the adhesive label becomes illegible or is missing, please contact your authorised service centre.

– Observe the pictograms for the attachment functions on the adhesive label (3).

This essentially involves the following:

– Actuate the function key for the "5th function" (2).

The LED for the "5th function" lights up.

– Move the operating lever (1) in the direction (E) or (F).

The attachment moves accordingly in the directions (E) or (F) as shown in the pictogram.

Example using the pictograms for configuration (1):

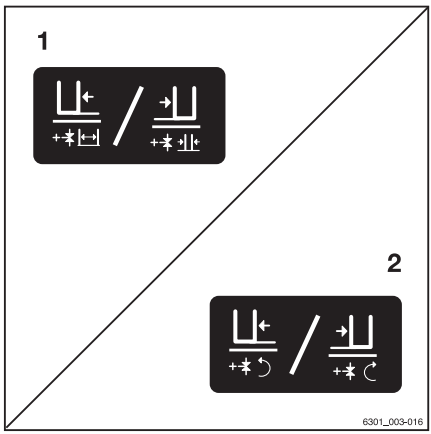


If the operating lever (1) is moved in the direction of the arrow (E), the sideshift moves to the left.

If the function key for the "5th function" (2) is actuated and the operating lever (1) is moved in the direction of the arrow (E), the fork arms open.

| Pictogram | Attachment function |
|---|---|
| | Auxiliary hydraulics "5th function" |
| | Move the sideshift to the left |
| | Move sideshift to the right |
| | Adjust fork arms: open |

| Picto-gram | Attachment function |
|---|---|
| | Adjust fork arms: close |
| | Rotate to the left |
| | Rotate to the right |

NOTE

*The pictograms are affixed according to the attachment fitted at the factory. If an attachment with different functions is fitted, the authorised service centre must check that the pictograms bear the correct representation and must change them if necessary.*

## Controlling attachments using the Fingertip

▷

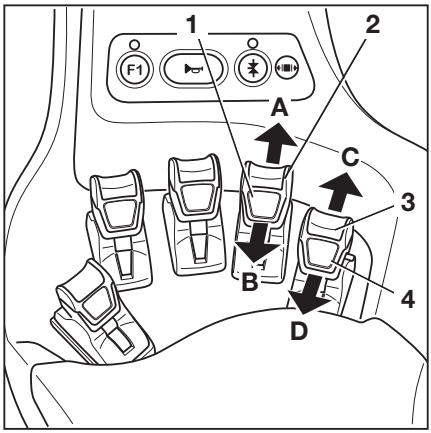


In this version, the attachments (variant) are controlled using the operating levers (1) and (2). The adhesive label bearing the pictograms for the hydraulic functions (3) for the operating lever (2) and the adhesive label (4) for the operating lever (1) are affixed at the designated points.

– If the adhesive labels become illegible or are missing, please contact your authorised service centre.

– Observe the pictograms for the attachment functions on the adhesive labels (3, 4).

The pictograms on the operating levers show the respective functions that are activated by these levers.

The following applies:

– Move the operating lever (1) in the direction of the arrow (A) or (B).

The attachment moves accordingly in the directions (A) or (B) as shown in the pictogram.

– Move the operating lever (2) in the direction of the arrow (C) or (D).

The attachment moves accordingly in the directions (C) or (D) as shown in the pictogram.

| Picto-gram | Attachment function |
|---|---|
| | Move the side shift frame or fork forwards |
| | Move the side shift frame or fork backwards |
| | Move the sideshift to the left |
| | Move sideshift to the right |
| | Adjust fork arms: open |
| | Adjust fork arms: close |
| | Release load retainer |
| | Clamp load retainer |
| | Open clamps |
| | Close clamps |
| | Rotate to the left |
| | Rotate to the right |
| | Tip shovel over |
| | Tip shovel back |

**NOTE**

*The pictograms are affixed according to the attachment fitted at the factory. If an attachment with different functions is fitted, the authorised service centre must check that the pictograms bear the correct representation and must change them if necessary.*

## Clamp locking mechanism

▷

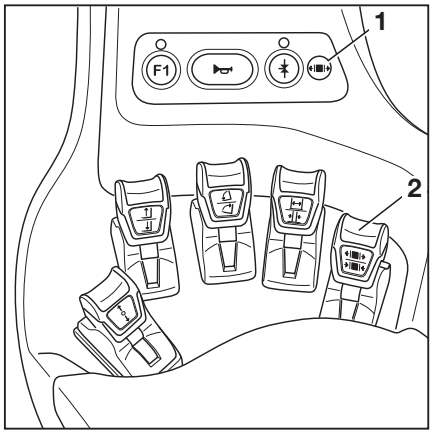


– To release the clamp locking mechanism, push the operating lever (2) forwards.

The clamp locking mechanism is released. The LED for the "clamp release" (1) lights up and remains lit while the clamp locking mechanism is released.

**NOTE**

*The hydraulic function for opening the clamp is available for one second after the clamp locking mechanism is released. After one second, the clamp locking mechanism is automatically reactivated.*

– To open the clamp, push the operating lever (2) forwards again.

It is not necessary to release the clamp locking mechanism in order to close the clamp.

– To close the clamp, pull the operating lever (2) backwards.

## Controlling attachments using the Fingertip and the 5th function

▷

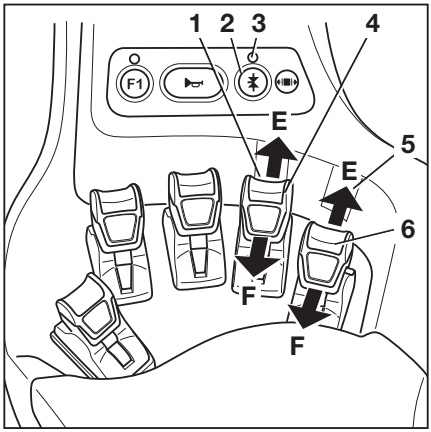


NOTE

*For technical reasons, clamping attachments **must not** be controlled via the 5th function.*

The function key for the "5th function" (2) and the operating levers (1, 6) are used to control the "5th function".

The pictograms (1, 5) behind the operating levers show the functions that are activated by the respective levers.

– If the adhesive labels become illegible or are missing, please contact your authorised service centre.

The following applies:

– Actuate the function key for the "5th function" (2).

The LED for the "5th function" (3) lights up.

– Move the operating lever (4) or (6) in the direction of the arrow (E) or (F).

The attachment moves accordingly in the directions (E) or (F) as shown in the pictogram.

NOTE

*The place where the adhesive label bearing the pictograms (1) or (5) is affixed shows which operating lever is intended to operate the "5th function". The pictograms show the functions that are activated by switching with the function key (2).*

| Pictogram | Attachment function |
|---|---|
| | Auxiliary hydraulics "5th function" |
| | Move the sideshift to the left |

| Picto-gram | Attachment function |
|---|---|
| | Move sideshift to the right |
| | Adjust fork arms: open |
| | Adjust fork arms: close |
| | Rotate to the left |
| | Rotate to the right |

**NOTE**

*The pictograms are affixed according to the attachment fitted at the factory. If an attachment with different functions is fitted, the authorised service centre must check that the pictograms bear the correct representation and must change them if necessary.*

## Controlling attachments using the Joystick 4Plus

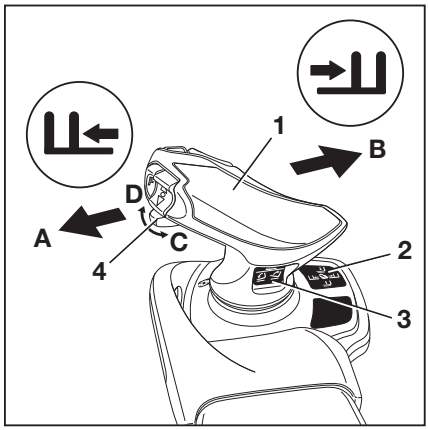


In this version, the attachments (variant) are controlled via the Joystick 4Plus (1) and the slider (4). The adhesive label bearing the pictograms for the hydraulic functions (2) for the Joystick 4Plus (1) and the adhesive label (3) for the slider (4) are affixed at the designated points.

– If the adhesive labels become illegible or are not present, please contact your authorised service centre.

– Observe the pictograms for the attachment functions on the adhesive labels (2, 3).

The pictograms on the adhesive labels regarding operation of the Joystick 4Plus show the respective functions that are activated by the individual operating devices of the Joystick 4Plus.

The following applies:

– Move the Joystick 4Plus (1) in the direction of the arrow (A) or (B).

The attachment moves accordingly in the directions (A) or (B) as shown in the pictogram.

– Move the slider (4) in the direction of the arrow (C) or (D).

The attachment moves accordingly in the directions (C) or (D) as shown in the pictogram.

| Pictogram | Attachment function |
|---|---|
| | Move the side shift frame or fork forwards |
| | Move the side shift frame or fork backwards |
| | Move the sideshift to the left |
| | Move sideshift to the right |
| | Adjust fork arms: open |
| | Adjust fork arms: close |
| | Release load retainer |
| | Clamp load retainer |
| | Open clamps |
| | Close clamps |

| Picto-gram | Attachment function |
|---|---|
| | Rotate to the left |
| | Rotate to the right |
| | Tip shovel over |
| | Tip shovel back |

NOTE

*The pictograms are affixed according to the attachment fitted at the factory. If an attachment with different functions is fitted, the authorised service centre must check that the pictograms bear the correct representation and must change them if necessary.*

## Clamp locking mechanism

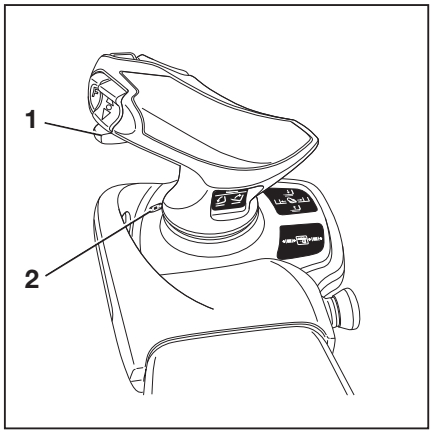


– To release the clamp locking mechanism, push the slider (1) to the left.

The clamp locking mechanism is released. The LED for the "clamp release" (2) lights up and remains lit while the clamp locking mechanism is released.

– To open the clamp, push the slider (1) to the left again.

NOTE

*The hydraulic function for opening the clamp is available for one second after the clamp locking mechanism is released. After one second, the clamp locking mechanism is automatically reactivated.*

It is not necessary to release the clamp locking mechanism in order to close the clamp.

– To close the clamp, push the slider (1) to the right again.

## Controlling attachments using the Joystick 4Plus and the 5th function

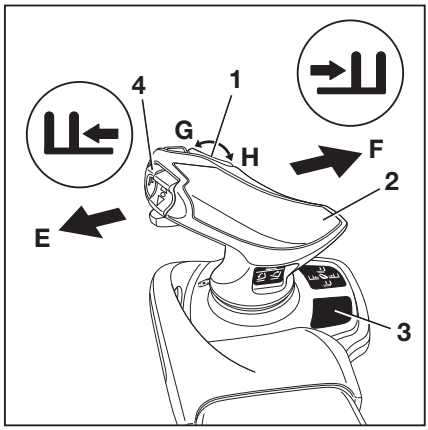


NOTE

*For technical reasons, clamping attachments* ***must not*** *be controlled via the 5th function.*

Use shift key "F" (4) and the Joystick 4Plus (2) and the horizontal rocker button (1) to control the "5th function".

The adhesive label bearing the pictograms for the hydraulic functions (3) for the Joystick 4Plus (2) and for the horizontal rocker button (1) is affixed at the designated point.

– If the adhesive label becomes illegible or is missing, please contact your authorised service centre.

The pictograms on the adhesive label regarding operation of the Joystick 4Plus show the respective functions that are activated by the individual operating devices of the Joystick 4Plus.

– Note the following attachment functions and pictograms.

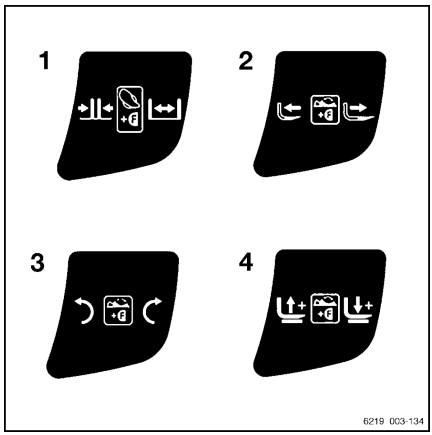


| | Operating device | Function of the attachment |
|---|---|---|
| 1 | Shift key "F" and Joystick 4Plus | Adjust fork arms: close/open |
| 2 | Shift key "F" and horizontal rocker button | Adjust fork: backwards/forwards |
| 3 | Shift key "F" and horizontal rocker button | Swivel lift mast or fork: left/right |
| 4 | Shift key "F" and horizontal rocker button | Additional fork carriage: lift/lower |

The following applies:

– Press and hold shift key "F" (4).

– Move the Joystick 4Plus (2) in the direction (E) or (F).

The attachment moves accordingly in the directions (E) or (F) as shown in the pictogram.

– Push the horizontal rocker button (1) in the direction (G) or (H).

The attachment moves accordingly in the directions (G) or (H) as shown in the pictogram.

– Release shift key "F" (4).

**NOTE**

*The pictograms are affixed according to the attachment fitted at the factory. If an attachment with different functions is fitted, the authorised service centre must check that the pictograms bear the correct representation and must change them if necessary.*

## Picking up a load using attachments

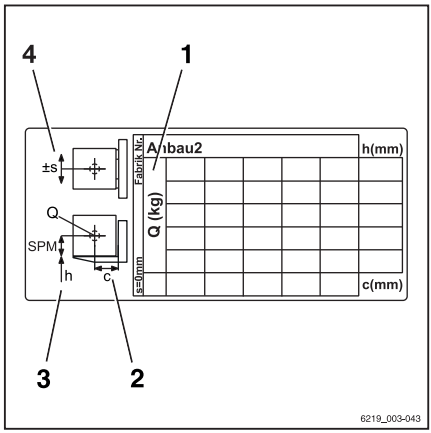


**WARNING**

Risk of accident!

Attachments must only be deployed for their intended use as described in the relevant operating instructions.

Drivers must be taught how to operate the attachments.

**WARNING**

Risk of accident!

Loads may only be picked up and transported with attachments if the loads are securely grasped and attached. Where necessary, loads must also be secured against slipping, rolling, falling over, swinging or tipping over. Note that any change to the position of the load centre of gravity will affect the stability of the truck.

Check the capacity rating plates for the attachments or combination of attachments.

– The rating plates show the permissible values for:

1 Load capacity Q (kg)
2 Load distance C (mm)
3 Lift height h (mm)
4 Permissible sideshift s (mm)

# Auxiliary equipment

## FleetManager (variant)

FleetManager is an equipment variant and can be fitted to the truck in different versions. The description and operation information can be found in the separate operating instructions for the corresponding FleetManager versions.

## Shock recognition (variant)

The shock recognition is an equipment variant of the FleetManager (variant) in which an acceleration sensor is installed in the truck. The acceleration sensor records data arising from rapid accelerations or decelerations of the truck, e.g. in the event of an accident. This data can be electronically read out and evaluated.

– If you have any questions, please contact your authorised service centre.

## Driver restraint systems (variants)

Different driver restraint systems are available as variants for this truck. The description and operation for these systems can be found in the separate "Driver restraint systems" operating instructions.

## Actuating the windscreen wipers and windscreen washers (variant)

Pressing the softkey switches between the operating stages in the sequence shown below.

| Press softkey | Operating stage |
|---|---|
| | Off |
| 1st time | On |
| 2nd time | Interval |
| 3rd time | Off |
| Hold (possible in all operating stages) | Washer |

## Front windscreen wiper and washer

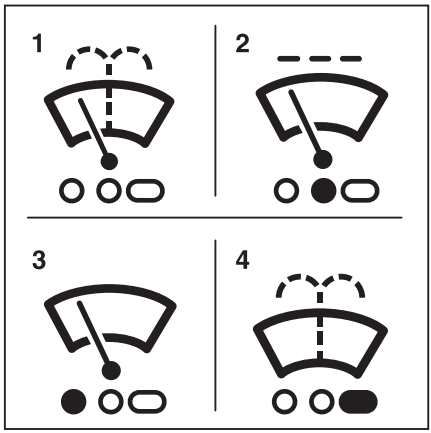


– To activate the "On" operating stage, press the softkey (1).

The "On" operating stage is activated. The symbol (3) appears

– To activate the "Intermittent mode" operating stage, press the softkey again.

The symbol (2) is shown with an orange background.

– To activate the "Washer" operating stage, press and hold the softkey.

The "Washer" operating stage is activated. The symbol (4) is displayed for as long as the softkey is pressed.

– Once the window is clean, release the softkey.

The previous operating stage is reactivated.

– To switch this operating stage off, press the softkey repeatedly until the symbol (1) appears again on the display. The activation bar next to the symbol goes out.

## Rear window wiper and washer

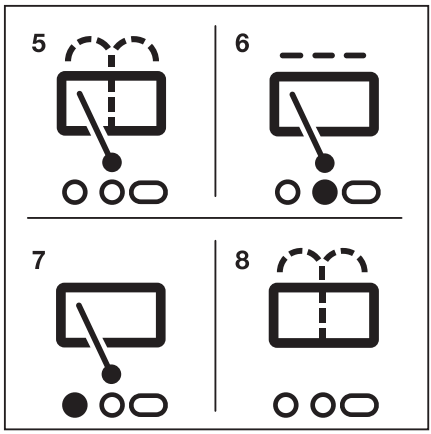


– To activate the "On" operating stage, press the corresponding softkey (5).

The "On" operating stage is activated. The symbol (7) appears

– To activate the "Intermittent mode" operating stage, press the softkey again.

The symbol (6) is shown with an orange background.

– To activate the "Washer" operating stage, press and hold the softkey.

The "Washer" operating stage is activated. The symbol (8) is displayed for as long as the softkey is pressed.

– Once the window is clean, release the softkey.

The previous operating stage is reactivated.

– To switch this operating stage off, press the softkey repeatedly until the symbol (1) appears again on the display.

## Roof panel wiper and washer

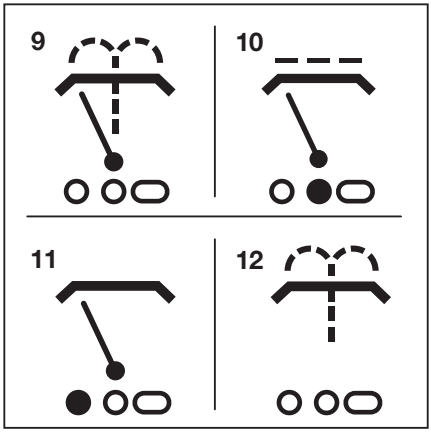


– To activate the "On" operating stage, press the corresponding softkey (9).

The "On" operating stage is activated. The symbol (11) appears

– To activate the "Intermittent mode" operating stage, press the softkey again.

The symbol (10) is shown with an orange background.

– To activate the "Washer" operating stage, press and hold the softkey.

The "Washer" operating stage is activated. The symbol (12) is displayed for as long as the softkey is pressed.

– Once the window is clean, release the softkey.

The previous operating stage is reactivated.

– To switch off the speed limitation, press the softkey again.

## Filling the washer system

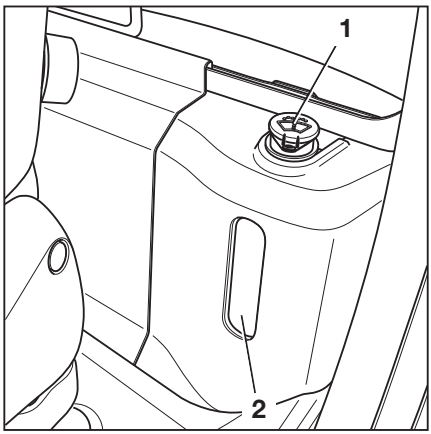


– Open the filler cap (1) of the washer system.

– Fill the washer reservoir (2) with washer fluid as described in the "Maintenance data table".

**⚠ CAUTION**

Damage due to the effects of frost!

When water freezes, it expands. If the washer system is not filled with fluid that is suitable for use in winter, ice can form in the washer system and cause damage.

– If there is a risk of frost, use fluid that is suitable for winter use.

– Close the filler cap.

– Operate the screen washer system until washer fluid is discharged from the spray nozzles.

## Operating the rear window heating

▷

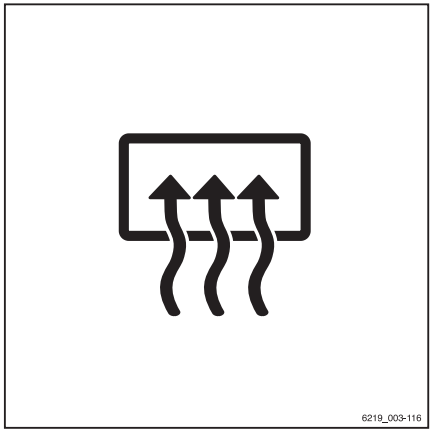


– To switch on the rear window heating, push the associated Softkey on the display-operating unit.

The rear window heating is switched on.

– To switch off the rear window heating, push the Softkey again.

The rear window heating is switched off.

**NOTE**

*The screen heating will switch off automatically after approx. 10 minutes.*

## Ceiling sensor (variant)

### Description

▷

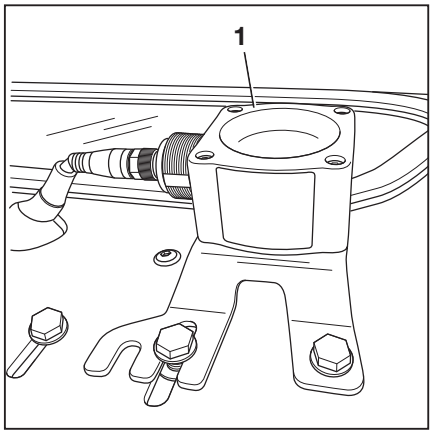


The ceiling sensor (1) on the overhead guard is an assistance system that automatically reduces the driving speed of the truck within halls. However, this assistance system does not release the driver from the responsibility of observing the speed limits on company premises.

Depending on the system setting, the ceiling sensor can detect overhead structures above the truck at a height of 2 m to 24 m above the sensor.

If the truck is equipped with a ceiling sensor, this assistance system is listed in the "Assistance systems" menu in the display-operating unit.

### Operating the ceiling sensor system

The drivers must be instructed on the use of the ceiling sensor system by the operating company.

When the driver enters a hall for the first time after starting work, they must be certain that the ceiling sensor system is working correctly. Despite the ceiling sensor system being installed, the driver must also check the speed indicator on the display-operating unit on a regular basis to ensure that they do not exceed the maximum speed permitted for the environment.

- **Entering a hall**
  The ceiling sensor system automatically detects when the truck enters a hall. The system then automatically slows the truck to the maximum speed that is set for the hall. The "Speed restriction" symbol appears in the display.
- **Leaving a hall**
  If the truck leaves the hall again, the ceiling sensor system enables the maximum speed set for areas outside the hall. Due to the range of the sensor, this may not happen until the truck is a few metres away from the hall exit. Before the truck is able to accelerate to the maximum speed permitted for outdoor areas, the speed limitation must still be unlocked. To do this, release the accelerator briefly and then operate the accelerator again.
- **Switching on the truck in a hall**
  If the truck is switched on inside a hall, the ceiling sensor system detects the hall ceiling and reduces the driving speed to the maximum speed that is set for halls.

## Possible limitations for object recognition

- If the truck moves under larger overhead structures outdoors, e.g. a pedestrian bridge, the ceiling sensor system may interpret this overhead structure to be a hall ceiling and reduce the maximum speed.
- In rare cases, it may occur that the ceiling sensor system does not recognize a ceiling and does not then reduce the speed. This can happen if the signals from the ceiling sensor are insufficiently reflected due to the ceiling geometry; for example, if there are large window areas at a 45° angle.

In these cases, the sensitivity and the range of the ceiling sensor system must be adjusted. See the following section.

## Changing the sensor settings

NOTE

*The ceiling sensor system is supplied by STILL with the following factory settings:*

- *Sensitivity: High*
- *Ceiling height: 24 m*

– Park the truck securely and switch it off.

– Turn the union nut (4) anti-clockwise to loosen it. Disconnect the electrical connection assembly by pulling out the plug.

– On the underside of the assembly baseplate on the overhead guard, hold four nuts (3) in place.

– Unscrew four socket head screws (2).

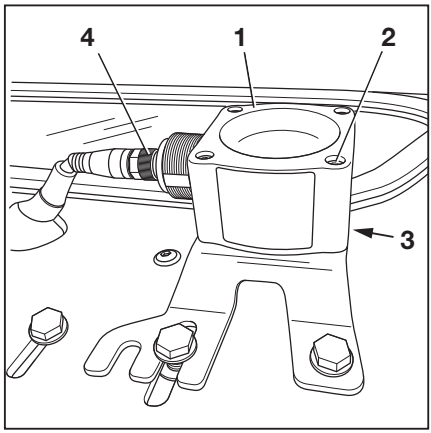


The key (5) is secured with a nut under the assembly baseplate.

– Carefully remove the ceiling sensor (1).

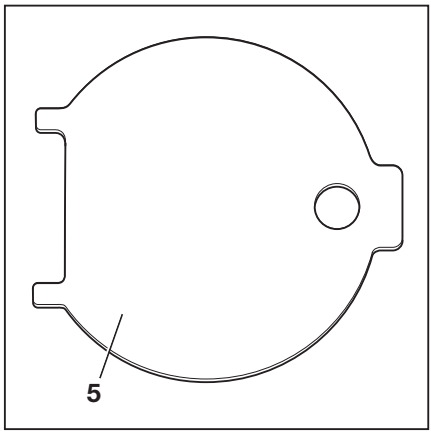

The sensor is adjusted using DIP switches (6). ▷

– To access the DIP switches, open the cover on the underside of the sensor housing with the key (5).

During this process, the two tabs of the key (5) fit into the recesses of the cover.

– Using the DIP switches "1 to 5" (6), adjust the range and the sensitivity of the sensor. The DIP switches can be adjusted using a small screwdriver.

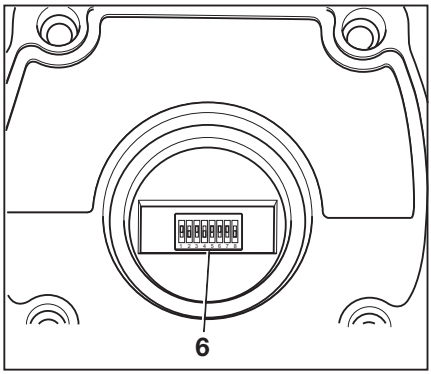


**⚠ CAUTION**

The settings for DIP switches "6 to 8" are the factory settings of the manufacturer.

Do **not** change the factory settings of the manufacturer!

Factory settings of the manufacturer

| DIP switch | | |
|---|---|---|
| 6 | 7 | 8 |
| 1 | 1 | 0 |

The possible settings for DIP switches "1 to 5" are shown in the following tables:

| DIP switch | | | |
|---|---|---|---|
| 1 | 2 | 3 | Range |
| 0 | 0 | 0 | 2 m |
| 0 | 0 | 1 | 3 m |
| 0 | 1 | 0 | 4 m |
| 0 | 1 | 1 | 6 m |
| 1 | 0 | 0 | 8 m |
| 1 | 0 | 1 | 12 m |
| 1 | 1 | 0 | 16 m |
| 1 | 1 | 1 | 24 m |

| 4 | 5 | Sensitivity |
|---|---|---|
| 0 | 0 | Very high |
| 0 | 1 | High |
| 1 | 0 | Medium |
| 1 | 1 | Low |

Representation of the beam angle depending on the sensitivity of the sensor that has been set, from (1) "low" to (4) "very high". ▷

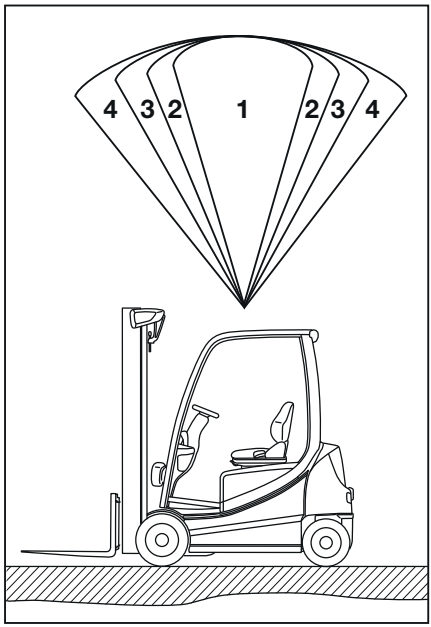


The sensor has different beam angles depending on the combination of range and sensitivity that has been set. See the following table:

| Sensitivity | Range | Beam angle |
|---|---|---|
| Low (1) | 2 m | 22.5° |
| | 4 m | 22.5° |
| | 8 m | 20° |
| | 16 m | 15° |
| | 24 m | 5° |
| Medium (2) | 2 m | 35° |
| | 4 m | 30° |
| | 8 m | 25° |
| | 16 m | 22.5° |
| | 24 m | 10° |

| Sensitivity | Range | Beam angle |
|---|---|---|
| High (3) | 2 m | 42° |
| | 4 m | 33° |
| | 8 m | 22.5° |
| | 16 m | 20° |
| | 24 m | 15° |
| Very high (4) | 2 m | 45° |
| | 4 m | 43° |
| | 8 m | 30° |
| | 16 m | 22.5° |
| | 24 m | 18° |

– After the adjustment, refit the cover.

– Refit the ceiling sensor and connect it.

– Check that it is working correctly.

## Fire extinguisher (variant)

The truck can be equipped with a fire extinguisher.

– Refer to the fire extinguisher labelling for operation and maintenance instructions.

## Run-on time for additional devices

Certain additional devices, such as terminals, take quite a long time to start up when the truck is switched on. Waiting for the additional device to start up after a short interruption of operation is annoying. To avoid this, the run-on time of the power supply can be adjusted via the display-operating unit. After the truck has been switched off, the additional device continues to be supplied with power during the run-on time.

– Activate the "Access authorisation for the fleet manager".

– Press the ☰ button.

– Press the ⚙ softkey.

– Press the `Truck settings` softkey. ▷

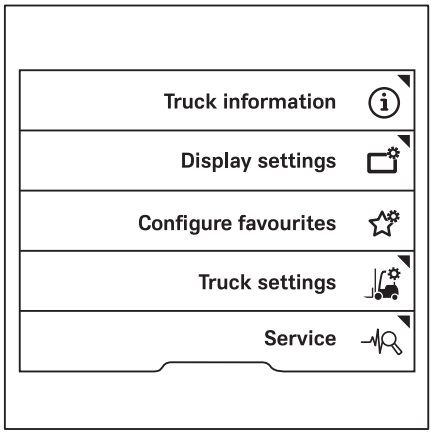


– Press the `Run-on time` softkey. ▷

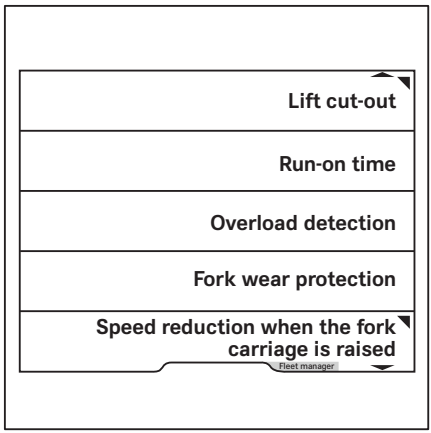

In this menu you can define the desired run-on time. ▷

– Enter the run-on time using softkeys `0 to 9`.

– To `save`, press the ☰ button.

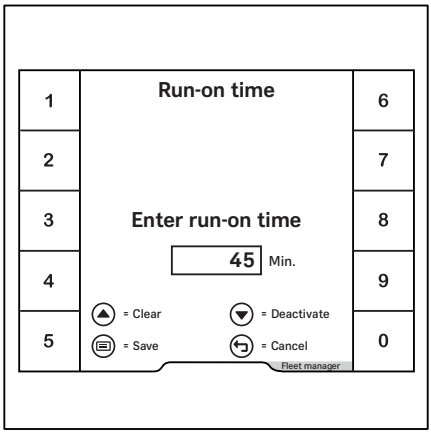


NOTE

*If a run-on time has been activated, the truck does not switch off completely. The power supply for terminals remains active. No information appears on the display. However, the display may glow slightly. This is normal.*

– Press the scroll button ▽ to deactivate the run-on time.

The menu closes.

# SVI STILL Vehicle Interface (variant)

## Description of SVI

The "SVI STILL Vehicle Interface" is an interface for connecting external fleet management and assistance systems to the truck. On a plug strip, it provides eight connection options for CAN bus, digital connections and a power supply. The SVI can be used to connect fleet management systems in accordance with VDI 4458 and assistance systems in accordance with VDI 4482. Energy and signals can be transferred via this interface.

**⚠ CAUTION**

The systems that can be connected via the SVI are fleet management systems and assistance systems; they **are not** safety systems. They help the driver to carry out their work with the truck.

The driver remains fully responsible for handling the truck safely.

– Always monitor the working environment of the truck and always operate the truck carefully.

**⚠ CAUTION**

Risk of component damage due to ingress of moisture.

– Make sure that the connector plugs of the external assistance systems are sealed.

**NOTE**

*The plugs of the SVI are fitted with sealing plugs ex works. Remove the sealing plugs when connecting systems.*

The installation position of the SVI in the truck depends on the truck type and the equipment:

- RX60: in the counterweight
- RX20: in the battery compartment next to the battery door

For trucks of the RX60 series, the interface can be located in various positions in the installation space within the counterweight. The installation position depends on the wheelbase of the truck and on which additional electrical components are installed in the truck, e.g. on-board charger, charging quick access or battery carrier.

The various possible installation positions are described below.

## Installation situation RX60 25-35 short

Position of the "SVI STILL Vehicle Interface"(1) / counterweight (2) ▷

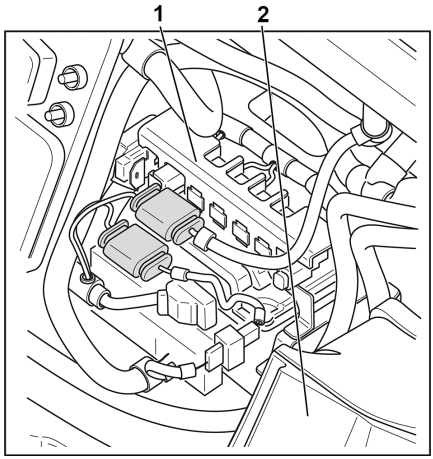

## Installation situation RX60 25-35 short with charging quick access

Position of the "SVI STILL Vehicle Interface"(1) / counterweight (2) ▷

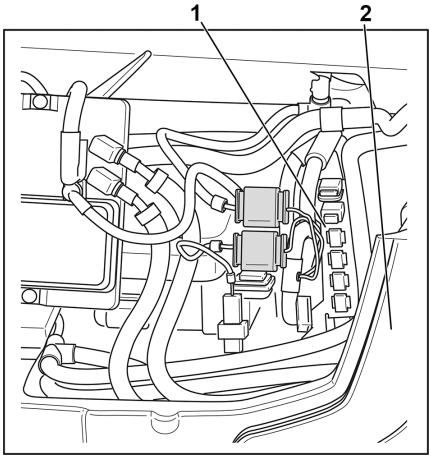


## Installation situation RX60 25-35 short with on-board charger

Position of the "SVI STILL Vehicle Interface"(1) / counterweight (2) ▷

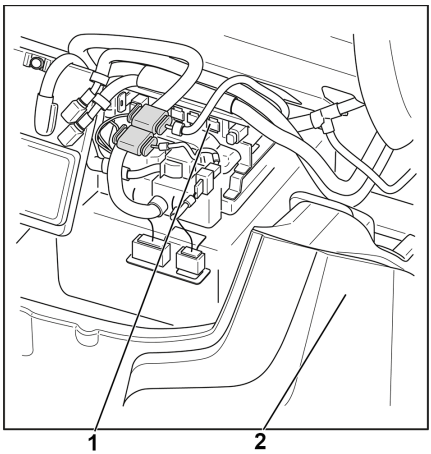

## Installation situation RX60 25-35 short with battery carrier

Position of the "SVI STILL Vehicle Interface"(1) / counterweight (2) ▷

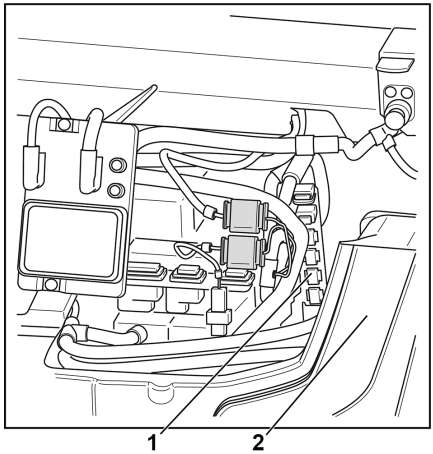


## Installation situation RX60 25-35 long

Position of the "SVI STILL Vehicle Interface"(1) / counterweight (2) ▷

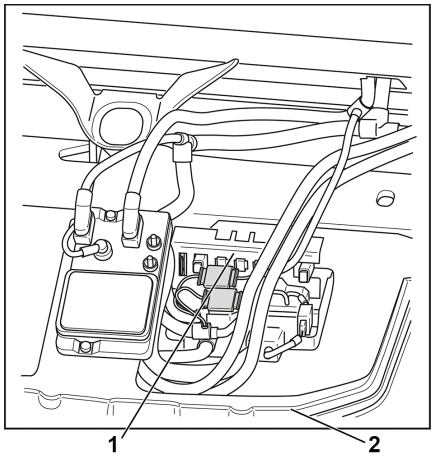

## Installation situation RX60 25-35 long with charging quick access

Position of the "SVI STILL Vehicle Interface"(1) / counterweight (2) ▷

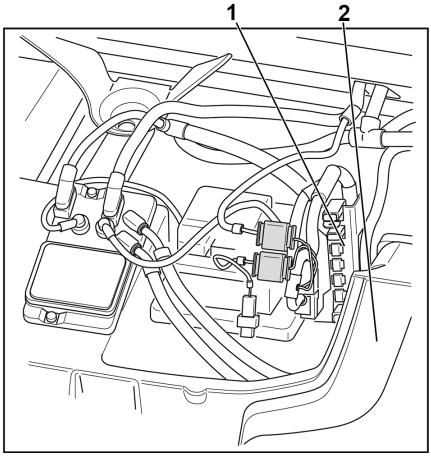


## Installation situation RX60 25-35 long with on-board charger

Position of the "SVI STILL Vehicle Interface"(1) / counterweight (2) ▷

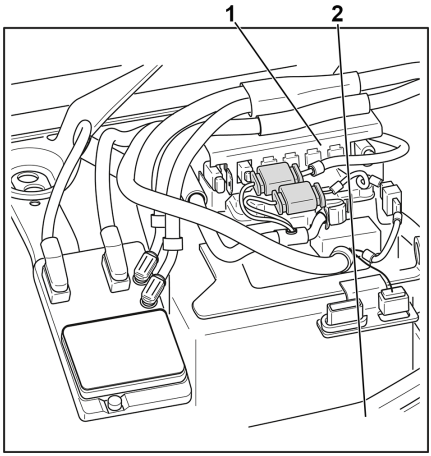

## Installation situation RX60 25-35 long with battery carrier

Position of the "SVI STILL Vehicle Interface"(1) / counterweight (2)

▷

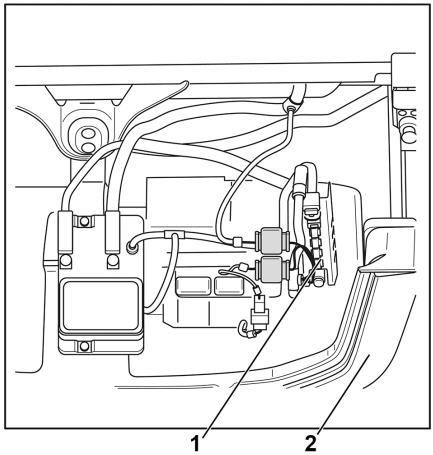


## Installation situation RX60 40-50

Position of the "SVI STILL Vehicle Interface"(1) / counterweight (2)

▷

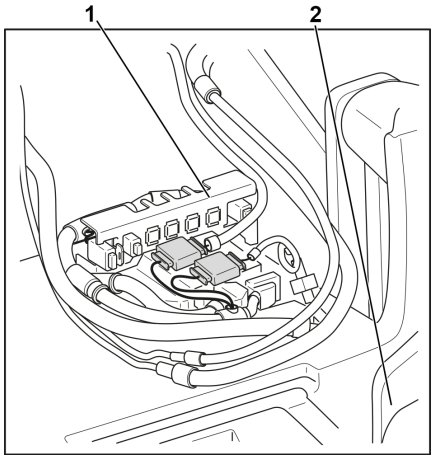

## Installation situation RX60 40-50 with charging quick access

Position of the "SVI STILL Vehicle Interface"(1) / counterweight (2)

▷

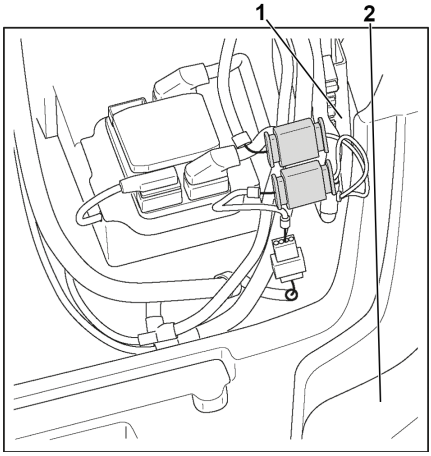


## Installation situation RX60 40-50 with on-board charger

Position of the "SVI STILL Vehicle Interface"(1) / counterweight (2)

▷

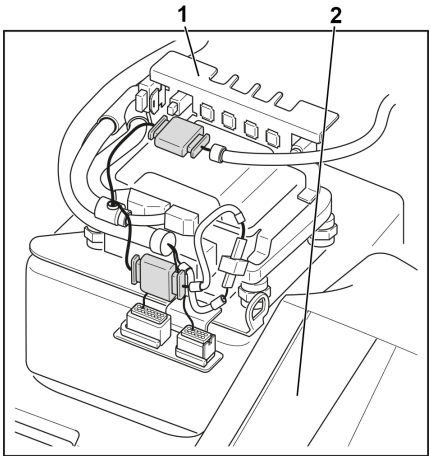

## Installation situation RX60 40-50 with battery carrier

Position of the "SVI STILL Vehicle Interface"(1) / counterweight (2) ▷

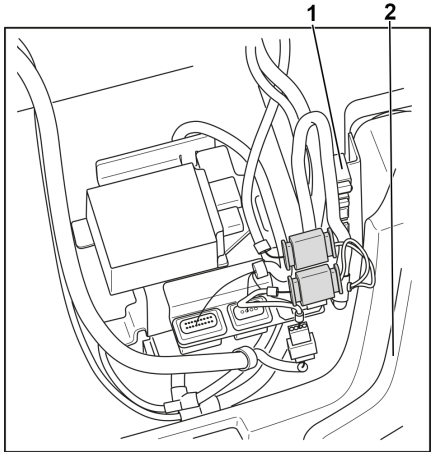


## Installation situation RX20

Position of "SVI STILL Vehicle Interface"(1) ▷

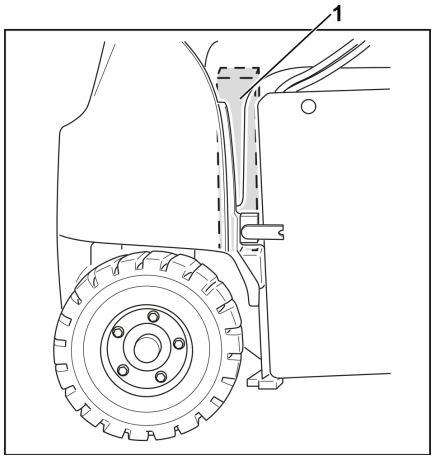


## Pin assignment for the SVI

The SVI provides a total of eight connection options:

- Four CAN bus connections
- Three digital inputs
- One 12-V power supply

| Pos. | Plug designation | Plug type | Pin assignment |
|---|---|---|---|
| (1) | X202: 12-V supply with 60 W (more on request) | FEP plug 2-pin female, model 42034000 (page on third-party system, manufacturer FEP) | Pin 1: +12 V<br>Pin 2: GND |
| (2) | X201: CAN 1 (VDI 4458) | Saab plug 4-pin (pin), model 1-965261-1 (page on third-party system, manufacturer TE), pin assignment in accordance with VDI 4458 | Pin 1: CAN-H<br>Pin 2: CAN-L<br>Pin 3: +12 V (output)<br>Pin 4: GND chassis |
| (3) | X206: CAN 6 (VDI 4482) | SAAB plug 4-pin (pin), model 1-965261-1 (page on third-party system, manufacturer TE), pin assignment in accordance with VDI 4482 | Pin 1: CAN H 6<br>Pin 2: CAN L 6<br>Pin 3: +12 V (input)<br>Pin 4: GND 6 |
| (4) | X203: CAN 3 (VDI 4482) | SAAB plug 4-pin (pin), model 1-965261-1 (page on third-party system, manufacturer TE), pin assignment in accordance with VDI 4482 | Pin 1: CAN H 3<br>Pin 2: CAN L 3<br>Pin 3: +12 V (input)<br>Pin 4: GND 3 |
| (5) | X204: CAN 4 (VDI 4482) | SAAB plug 4-pin (pin), model 1-965261-1 (page on third-party system, manufacturer TE), pin assignment in accordance with VDI 4482 | Pin 1: CAN H 4<br>Pin 2: CAN L 4<br>Pin 3: +12 V (input)<br>Pin 4: GND 4 |
| (6) | X200: 3 digital inputs | FEP plug 6-pin female, model 42121700 (page on third-party system, manufacturer FEP) | Pin 1: dig_input1<br>Pin 2: DGND<br>Pin 3: dig_input2<br>Pin 4: DGND<br>Pin 5: dig_input3<br>Pin 6: DGND |

SVI plug positions RX20 ▷

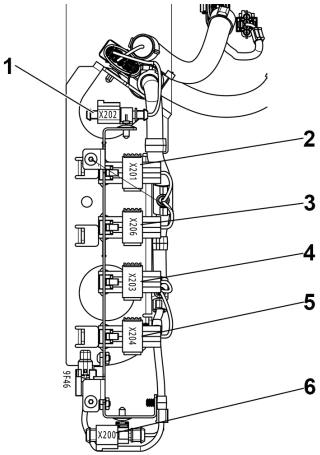


SVI plug positions RX60 ▷

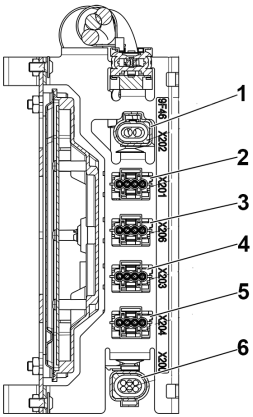


**NOTE**

*The plug designations are also marked on an adhesive label next to the plugs.*

**NOTE**

*In the various RX60 versions, the SVI is installed either vertically or horizontally. This depends on the wheelbase of the truck and which other electronic components are installed in the truck.*

# Optical assistance systems

## Circumferential view camera system (variant)

### Design

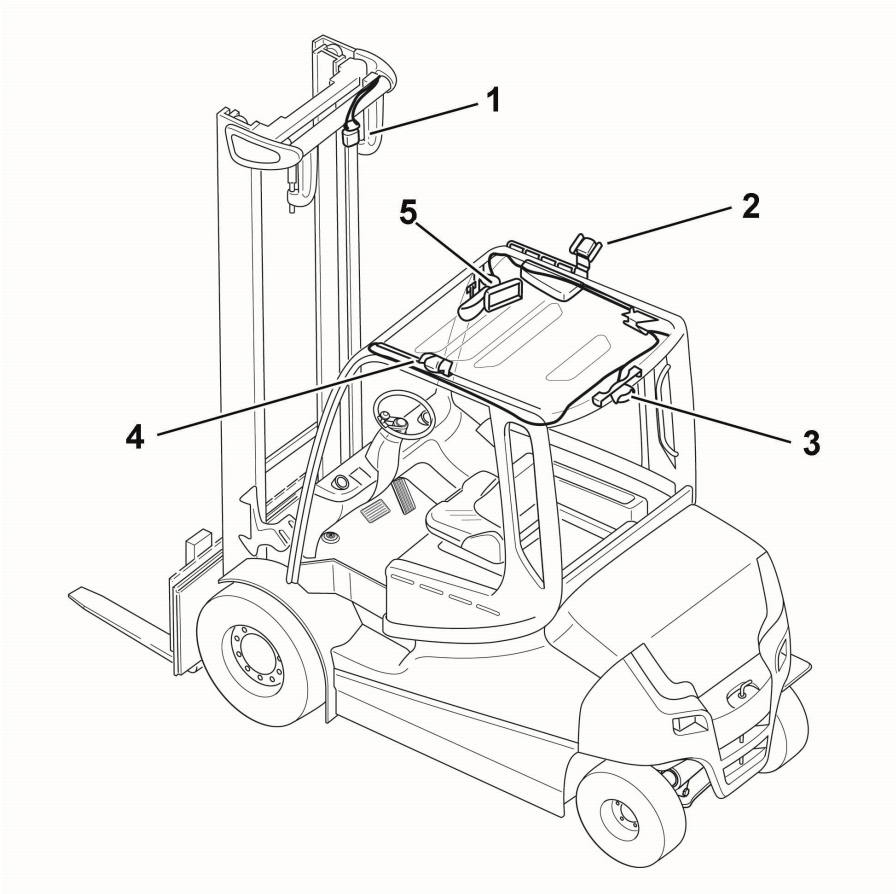


| | | | |
|---|---|---|---|
| 1 | Front camera | 4 | Left-hand camera |
| 2 | Right-hand camera | 5 | Monitor |
| 3 | Rear camera | | |

The camera system consists of four cameras and a monitor for the camera images. It provides a 360° circumferential view and supports the driver in handling the truck. The camera

system makes it easier to detect other vehicles, people and objects in the vicinity of the truck.

For safe operation of the camera system, it must be sufficiently bright. The camera system is not suitable for poorly lit or dark environments. External influences such as rain, sunlight, headlights etc. can affect the image display.

The cameras are set at the factory for a 360° circumferential view.

**⚠ DANGER**

**Risk of accident!**

If a camera is misaligned or damaged, full all-round visibility can no longer be guaranteed.

The driver must always check the area displayed on the monitor by also making direct visual contact.

**⚠ DANGER**

**Risk of accident due to improper use!**

The camera system must only be used for its intended purpose as set out and described in these operating instructions. Any other use is improper use and therefore not permitted.

**⚠ CAUTION**

Possible component damage!

The camera inputs are live. No moisture or conductive objects may enter the inputs.

**⚠ CAUTION**

The camera system is an aid to the driver.

However, the driver is always responsible for safe operation of the truck

- Regardless of the cameras, always look in the direction you are driving.
- **Do not** rely solely on the camera system and always observe the immediate surroundings of the truck.
- In order to obtain a complete view of the safety-relevant areas, use additional aids such as mirrors to obtain a complete view of the safety-relevant areas.

**⚠ CAUTION**

Distorted display of the surroundings. Distances and geometric dimensions of obstacles may differ in reality from the representation on the screen.

– Regardless of the cameras, always look in the direction you are driving.

– **Do not** rely solely on the camera system.

**NOTE**

- *The monitor is fitted with a cover to protect it from operating errors.*
- *The components of the camera system must not be opened.*
- *Only the authorised service centre may install and maintain the camera system.*

## Monitoring area of the camera

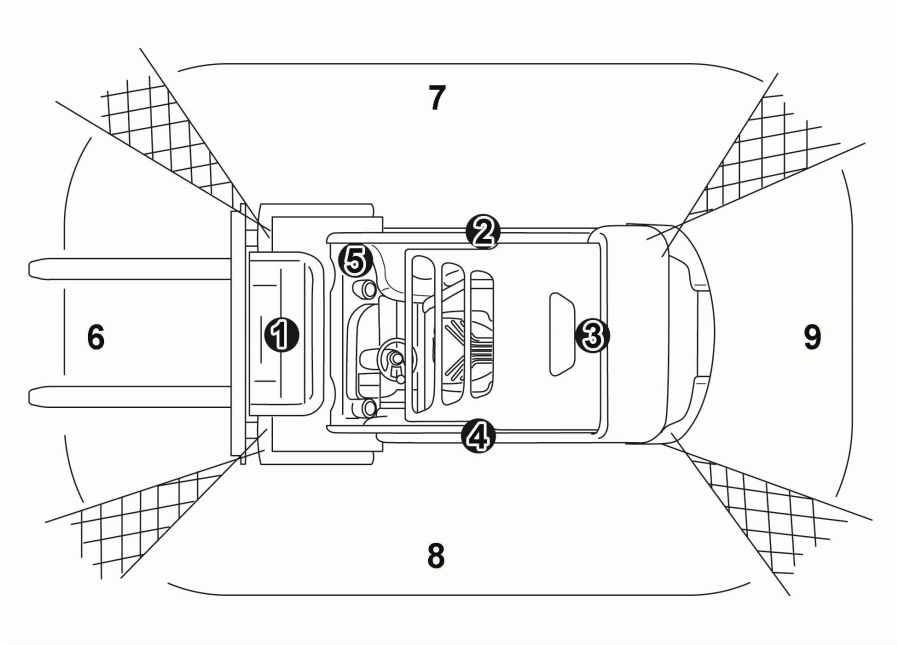


| | | | |
|---|---|---|---|
| 1 | Front camera | 5 | Monitor |
| 2 | Right-hand camera | 6 | Front field of vision |
| 3 | Rear camera | 7 | Right-hand field of vision |
| 4 | Left-hand camera | 8 | Left-hand field of vision |

9 Rear field of vision

The four cameras cover a 360° detection area around the truck. In the hatched areas of the representation above, the fields of vision of the respective adjacent cameras overlap.

## Monitor

The cameras transmit their images to a monitor mounted on the top of the right-hand A column via a double joint. To adjust the desired position of the monitor, proceed as follows:

– Turn the wing screw (1) anti-clockwise to loosen it. Hold the monitor with one hand.

– Move the monitor to the desired position and hold it.

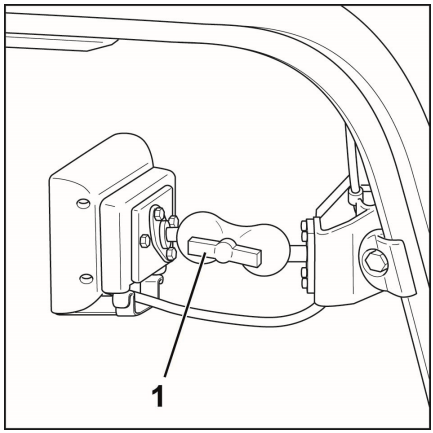


### Display of camera images in all driving situations

The monitor shows the images from all four fields of vision simultaneously in all driving situations.

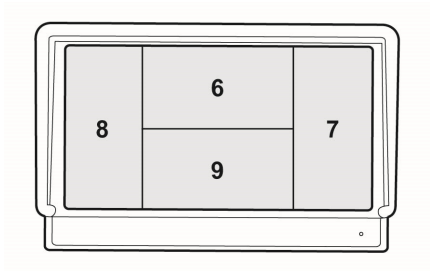


6 Front field of vision
7 Right-hand field of vision
8 Left-hand field of vision
9 Rear field of vision

NOTE

*If another monitor display is desired, contact your authorised service centre. For example, other possible settings are:*

- *Increasing the rear field of vision for reverse travel*
- *Increasing the right-hand or left-hand field of vision when indicating right or left*

## Operation

Before attempting to drive, the driver must ensure that all four cameras are operational and set correctly.

- For the right-hand and left-hand cameras, hold one hand out of the right-hand cab window and one hand out of the left-hand cab window. While doing so, check on the monitor whether they can be seen.
- In the front camera image, the contour of the lift mast must be visible on the right-hand and left-hand sides.
- In the rear camera image, the rear part of the counterweight must be visible.

## Cleaning

- Clean the camera lenses with compressed air or use a small amount of glass cleaner to moisten the lenses.
- Then carefully wipe away with a lint-free cloth. Do not use an aggressive cleaning agent or solvents.
- Do not use high-pressure cleaning equipment.
- Carefully wipe the monitor with a lint-free cloth. Do not use an aggressive cleaning agent or solvents.
- Occasionally remove dust from the monitor's ventilation slots with a cloth or brush.

# Modular camera system (variant)

## Design

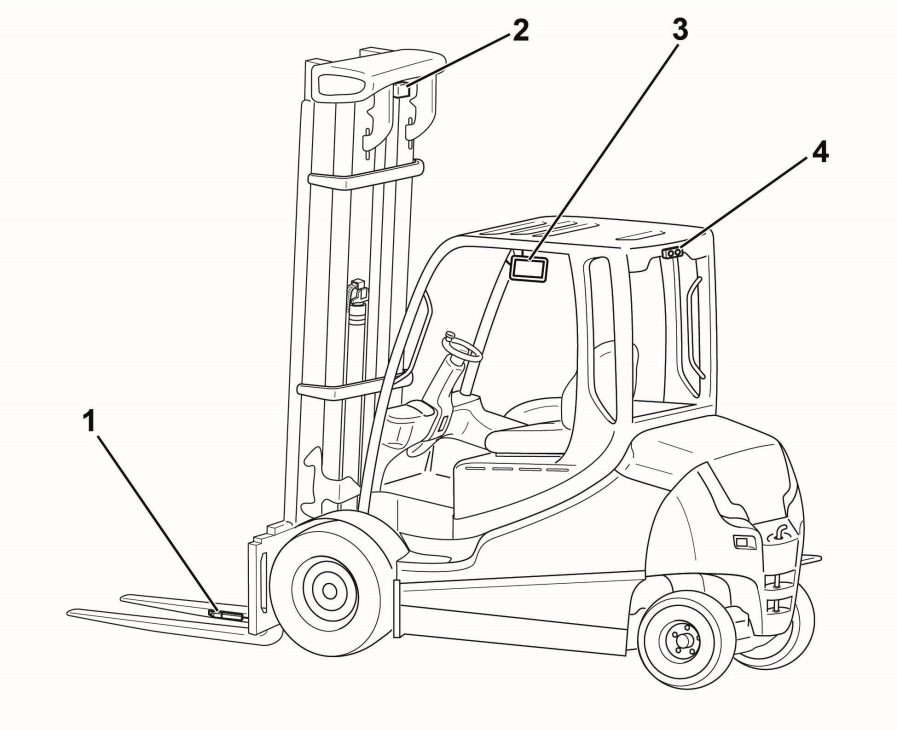


The modular camera system consists of the following components:

1 Camera on the right-hand fork arm
2 Front view camera in the lift mast
3 Monitor
4 Rear view camera on the overhead guard

These cameras can only be ordered individually or in the following combinations:

- Front view camera in the lift mast + rear view camera on the overhead guard
- Camera on the right-hand fork arm + rear view camera on the overhead guard

The camera system makes it easier to detect other vehicles, people and objects in the vicinity of the truck.

For safe operation of the camera system, it must be sufficiently bright. The camera system is not suitable for poorly lit or dark environments. External influences such as rain, sunlight, headlights etc. can affect the image display.

**⚠ DANGER**

**Risk of accident!**

If a camera is misaligned or damaged, a reliable camera view can no longer be guaranteed.

The driver must always check the area displayed on the monitor by also making direct visual contact.

**⚠ DANGER**

**Risk of accident due to improper use!**

The camera system must only be used for its intended purpose as set out and described in these operating instructions. Any other use is improper use and therefore not permitted.

**⚠ CAUTION**

Possible component damage!

The camera inputs are live. No moisture or conductive objects may enter the inputs.

**⚠ CAUTION**

The camera system is an aid to the driver.

However, the driver is always responsible for safe operation of the truck

- Regardless of the cameras, always look in the direction that you are driving.
- **Do not** rely solely on the camera system and always observe the immediate surroundings of the truck.
- To obtain a complete view of the safety-relevant areas, use additional aids such as mirrors.

**⚠ CAUTION**

Distorted display of the surroundings. Distances and geometric dimensions of obstacles may differ in reality from the representation on the screen.

– Regardless of the cameras, always look in the direction you are driving.

– **Do not** rely solely on the camera system.

**NOTE**

- *The monitor is fitted with a cover to protect it from operating errors.*
- *The components of the camera system must not be opened.*
- *Only the authorised service centre may install and maintain the camera system.*

## Monitor and camera images

The cameras transmit their images to a monitor mounted on the top of the right-hand A-pillar via a double joint. To adjust the desired position of the monitor, proceed as follows:

– Turn the wing screw (1) anti-clockwise to loosen it. Hold the monitor with one hand.

– Move the monitor to the desired position and hold it.

– Re-tighten the wing screw (1) by turning it clockwise.

Depending on the cameras installed on the truck, different images are transmitted to the monitor:

▷

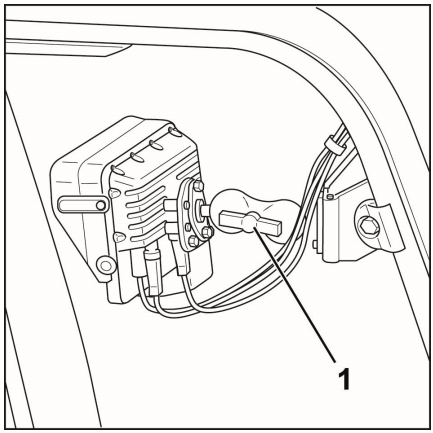


| Camera | Monitor image |
|---|---|
| Front view camera in the lift mast | Image always active |
| Rear view camera on the overhead guard | Image always active |
| Front view camera in the lift mast + rear view camera on the overhead guard | "Neutral" and "forwards" drive direction: image from the front view camera<br>"Backwards" drive direction: image from the rear view camera |

| Camera on the right-hand fork arm | Image always active |
|---|---|
| Camera on the right-hand fork arm + rear view camera on the overhead guard | "Neutral" and "forwards" drive direction: image from the fork arms camera<br>"Backwards" drive direction: image from the rear view camera |

The default setting of the monitor images can be changed by the authorised service centre on request, e.g.:

- Image from the rear view camera for the "neutral" and "forwards" drive direction and image from the front view camera for the "backwards" drive direction
- If you select the "backwards" drive direction, the front image remains active for another 20 to 30 seconds before the display changes to the rear image. The same behaviour applies in reverse if you change the drive direction from "backwards" to "forwards".

– To change the default settings of the monitor images, contact the authorised service centre.

## Information about the cameras

### Rear view camera

- The camera angle is chosen in such a way that the counterweight is always visible and thus the immediate surroundings of the truck. STILL recommends not changing this setting.
- The image is displayed the correct way round, just like the interior mirror on a car. Objects at the rear right of the truck are displayed on the right-hand side of the monitor.

### Front view camera on the lift mast

- The camera angle is chosen so that the fork tips are always visible. When transporting tall loads, you can set the camera at a steeper angle so that you can see over the load. Caution: The truck contour for better orientation is no longer visible, people in the immediate vicinity are no longer displayed etc.

**⚠ CAUTION**

When transporting tall loads, the front view camera cannot detect people or obstacles directly in front of the truck.

Do not drive for long distances. If necessary, use a guide.

### Camera on the right-hand fork arm

- Camera may only be used to place loads into stock and remove loads from stock, not for driving.
- Position the lift mast vertically for optimal horizontal visibility.
- Select the fork arm distance so that there is enough space for the camera when entering the load carrier. This is to avoid damaging the camera or changing the position of the load.
- The maximum load capacity of the fork arms corresponds to the load capacity indicated on the load capacity diagram for the truck.
- Before daily operation, check that the camera lens is uncovered, clean and undamaged.

**⚠ CAUTION**

Possible risk of injury or component damage!

If one fork arm is damaged or worn, always replace both fork arms. If there is damage or wear on one fork arm, it can be assumed that the counterpart also has or will have corresponding damage or wear.

**⚠ CAUTION**

Risk of damage to components!

Do not expose the fork arms to lateral forces.

– Do not drive into a pallet or load at an angle.

– Do not press the forks sideways against a pallet or load.

**⚠ CAUTION**

Possible risk of injury or component damage due to improper modifications of the fork arms!

Modifications such as drill holes for attachments, welding work or similar can weaken the structure of the fork arms and cause serious accidents due to falling loads.

– Do not make any modifications to the fork arms.

### Cleaning

- Clean the camera lenses with compressed air or use a small amount of glass cleaner to moisten the lenses. Do not use an aggressive cleaning agent or solvents.
- Then carefully wipe away with a lint-free cloth.
- Do not use high-pressure cleaning equipment.
- Carefully wipe the monitor with a lint-free cloth. Do not use an aggressive cleaning agent or solvents.
- Occasionally remove dust from the monitor's ventilation slots with a cloth or brush.

## Laser-Smartfork assistance system (variant)

The Laser-Smartfork assistance system is an optical lift height positioning support, e.g. for placing a load on a shelf. A laser (1) in the tip of the right-hand fork arm projects a horizontal line onto the shelf directly in front of the fork arm. This allows the driver to estimate the height on the racking at which the fork arms are located. The system therefore assists drivers when placing loads into stock and removing loads from stock at great heights.

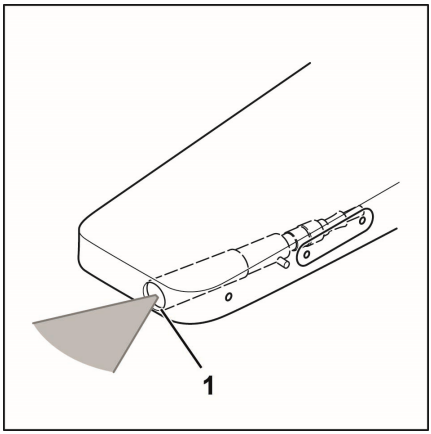


### Design and function

The maximum load capacity of the fork arms corresponds to the load capacity indicated on the load capacity diagram for the truck.

The driver is responsible for ensuring that the laser does not pose a risk to any persons.

**⚠ DANGER**

**Risk of injury! Looking into the laser beam can damage the eyes, laser radiation (laser class 1M).**

- If there is a possibility that people are at risk, switch off the laser immediately.
- Never look directly into the laser beam.
- Never look into the laser beam with a magnifying lens such as binoculars or a magnifying glass.
- If the beam hits your eye, close your eyes immediately and turn away.
- Ensure that the laser beam cannot be reflected by mirrors or reflective surfaces.
- Never direct the laser beam at a person's face.

**⚠ DANGER**

**Risk of accident due to improper use!**

The Laser-Smartfork must only be used for its intended purpose as set out and described in these operating instructions. Any other use is improper use and therefore not permitted.

**⚠ CAUTION**

Possible risk of injury or component damage!

If one fork arm is damaged or worn, always replace both fork arms. If there is damage or wear on one fork arm, it can be assumed that the counterpart also has or will have corresponding damage or wear.

**⚠ CAUTION**

Risk of damage to components!

Do not expose the fork arms to lateral forces.

- Do not drive into a pallet or load at an angle.
- Do not press the forks sideways against a pallet or load.

**⚠ CAUTION**

Possible risk of injury or component damage due to improper modifications of the fork arms!

Modifications such as drill holes for attachments, welding work or similar can weaken the structure of the fork arms and cause serious accidents due to falling loads.

- Do not make any modifications to the fork arms.

## Precautionary measures

– There must be no persons stood on the racking levels onto which the laser beam is projected.

– If it is possible to see through the rack onto racks situated behind the relevant rack, people must not stand on the racking levels opposite the rack on which the laser is working.

– If a risk to people cannot be ruled out, the driver must switch off the laser immediately.

## Tasks to be performed before starting work

To ensure that the system operates accurately, the lift mast must be vertical and the lens of the laser must be clean and free of ice.

- Check that the assistance system is functioning correctly before starting work.
- Check that the lens of the laser is uncovered, clean and undamaged. If necessary, clean the lens, see the chapter entitled "Cleaning".

## Using Laser-Smartfork

▷

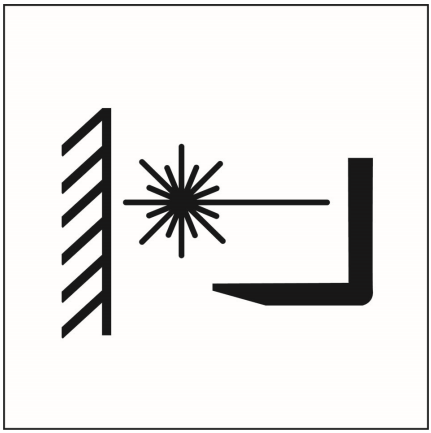

**⚠ CAUTION**

Risk of damage due to miscalculation of the lift height

The Laser-Smartfork is an assistance system that helps the driver to place loads into stock and remove loads from stock at significant lift heights. The driver must be aware of the limits of the system. He must not rely exclusively on the assistance system.

**⚠ CAUTION**

Risk of damage to components!

The Laser-Smartfork only shows the correct height for placing loads into stock when the lift mast is vertical.

– Position the lift mast vertically before placing loads into stock or removing loads from stock.

When purchasing the system, there are two methods of operating the laser to choose from:

1 **Manual**: the laser is inactive when the truck is switched on. Switch on and off using the softkey on the display-operating unit.

2 **Automatic**: the laser is inactive when the truck is switched on. The automatic function is switched on or off using the softkey. If the automatic function is switched on, the laser switches on as soon as you actuate the "lift/lower" operating device. The laser switches off again if:

- The "lift/lower" function is not actuated for 20 seconds
- The truck is travelling faster than 4 km/h
- The laser is switched off using the softkey in the display-operating unit

**NOTE**

*For a conversion to the other variant or an adjustment of the run-on times or switch-off speed, contact the authorised service centre.*

– Depending on the variant, switch on the laser. **Manual:** Press the button on the display-operating unit and access the "Load" sub-menu. Then press the softkey. You can also set this softkey as a favourite on the first level of the display-operating unit. See the chapter entitled "Configuring favourites" in the separate operating instructions for the "STILL Easy Control display-operating unit".

– **Automatic:** Switch on the automatic function using the softkey. When the "lift/lower" operating device is subsequently actuated, the laser switches on automatically.

– Move the fork arms in front of the load to be picked up.

– Position the lift mast vertically. Lift the fork carriage. The laser line is projected horizontally onto the load at the current height of the fork arm.

– Place the load into stock or remove the load from stock.

– Fully lower the fork carriage before driving any further.

– Depending on the variant, switch off the laser. **Manual:** Press the softkey again to switch off the laser. **Automatic:** The laser switches off automatically if:

- The "lift/lower" function is not actuated for 20 seconds
- The truck is travelling faster than 4 km/h
- The laser is switched off using the softkey in the display-operating unit

## Adjusting the laser

The laser must project an exactly horizontal line so that the lift height of the fork can be accurately estimated. Therefore, the laser must be regularly checked to ensure that it is exactly horizontal.

– Safely park the truck opposite a horizontal reference object, e.g. the horizontal base of a rack.

– Switch on the laser and lift the fork to the height of the reference object. The laser line must run exactly parallel to the reference object.

If the line is not parallel, proceed as follows:

– Loosen the four grub screws (1) on the cover plate (2) and carefully remove the cover plate.

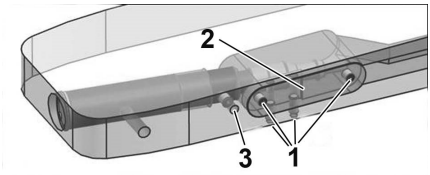


– Loosen the grub screw (3) that prevents the laser from rotating by turning the grub screw anti-clockwise.

– Carefully rotate the laser until the laser line is parallel to the reference object again.

– Carefully tighten the grub screw (3) by turning it clockwise.

– Re-fit the cover plate (2) on the maintenance opening and tighten the four grub screws (1).

## Cleaning the lens of the laser

To ensure that the system operates accurately, the lens of the laser must be clean and free of ice. If the laser line is no longer clearly visible, the lens must be cleaned.

**⚠ WARNING**

Possible damage to the laser due to improper cleaning!

- Do not use aggressive cleaning materials or solvents.
- Do not use high-pressure cleaning equipment.
- Never immerse the laser in water or other liquids.

- Clean the lens (1) in the fork tip only when the laser is switched off. ▷

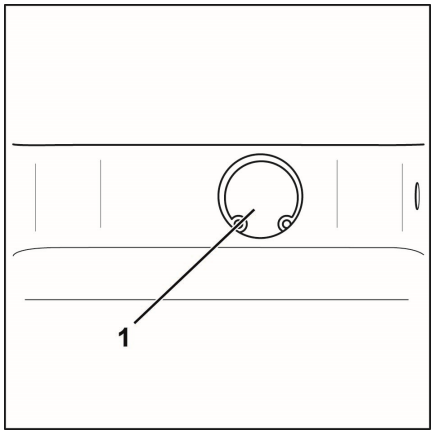


- Clean the lens with a lint-free cloth or cotton swab. If necessary, moisten the swab with a commercially available glass cleaner. Do not use an aggressive cleaning agent or solvents.
- Do not use high-pressure cleaning equipment.

### Frequency of cleaning

The lens must be cleaned when necessary and at least once every three months.

# Cab

## Opening and closing the cab door

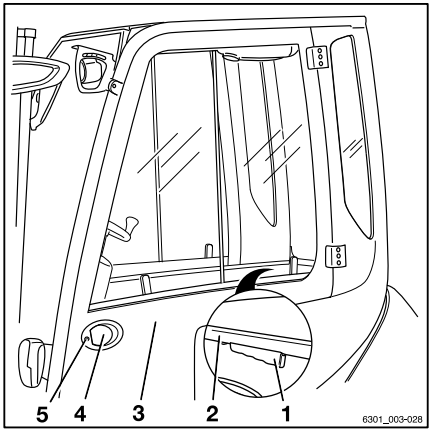


**⚠ CAUTION**

Risk of component damage.

If the cab door opens while driving, there is risk of damage from a collision.

– The cab door must be latched securely in the engaged position.

### Opening the cab door from the outside:

– Insert the key in the door lock (5), unlock the door and remove the key.

– Pull the handle (4). Unlock the door lock.

– Open the cab door (3) by pulling it outwards.

### Opening the cab door from the inside:

– Take hold of the handle (2) and the latch (1).

– Push in the latch. Push the cab door outwards.

### Closing the cab door from the outside:

– Take hold of the door by the door handle (4). Close the cab door by pushing.

### Closing the cab door from the inside:

– Take hold of the handle (2).

– Pull the cab door inwards and close it.

# Opening and closing the 180° cab door (variant)

**⚠ WARNING**

Risk of accident if the restraint system is not used.

If the truck has no restraint system other than the cab door and seat belt, it is possible to fall out when driving with the door open.

– Always fasten the seat belt before driving with the door open.

– Only open and close the door or door sections when the truck is stationary.

**NOTE**

*If the door or door sections are opened while driving, the message* `Close cab door !` *appears. Depending on the setting, the truck stops or limits the driving speed.*

– To remove the restriction, stop the truck and close the door.

The 180° cab door can be swivelled up to the counterweight and locked there. It is intended for driving with the door open in high outside temperatures. The door is split into two and hinged by two sets of hinges. The front door section (6) can be opened 180° and locked in place. To do this, the front door section (6) must be unlocked from the rear door section (2), which remains closed when the door is opened 180°.

How to open and close the entire cab door is described first.

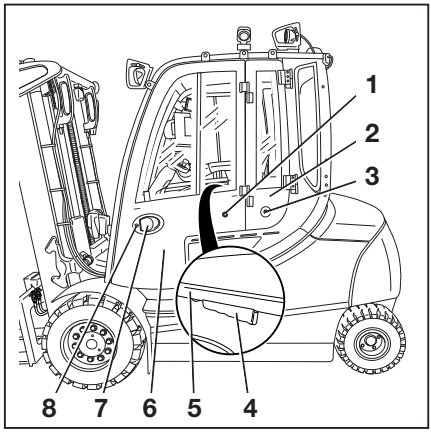


## Opening the cab door from the outside:

– Insert the key in the door lock (8), unlock the door and remove the key.

– Pull the door handle (7) and open the cab door by pulling it outwards.

The cab door is held in the open position by a gas spring.

## Opening the cab door from the inside:

– Take hold of the handle (5) and the latch (4).

– Push in the latch. Push the cab door outwards.

### Closing the cab door from the outside:

– Take hold of the cab door by the door handle (7). Close the cab door by pushing.

### Closing the cab door from the inside:

– Take hold of the handle (5).

– Pull the cab door inwards and close it.

## Opening the front door section 180°: ▷

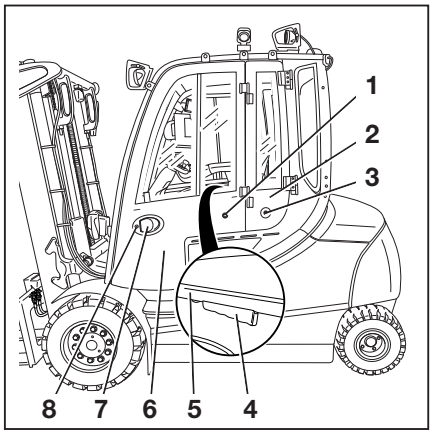


– Remove the square-section key (9) from the support mounting. ▷

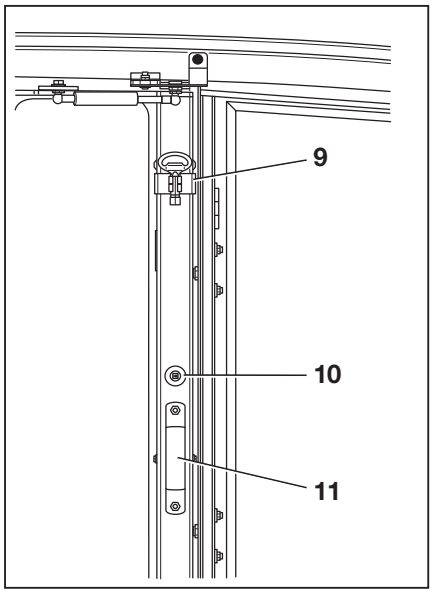


– Insert the square-section key (9) into the opening provided (10).

– Turn the square-section key (9).

The front door section (6) is unlocked from the rear door section (2).

– Remove the square-section key (9) and store it in the support mounting provided.

– Take hold of the handle (5) and the latch (4).

– Push in the latch. Push the front door section (6) outwards and swivel it 180°. ▷

The front door section (6) locks with its securing cam (1) in the lock (3) of the rear door section (2).

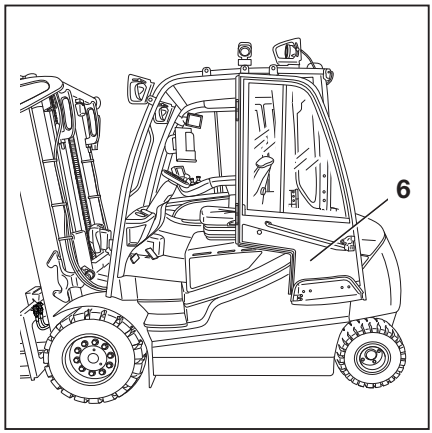


## Closing the front door section from the inside:

– To release the latch, press the knob (10) in firmly. ▷

– Take hold of the handle (5).

– Pull the front door section inwards and close it.

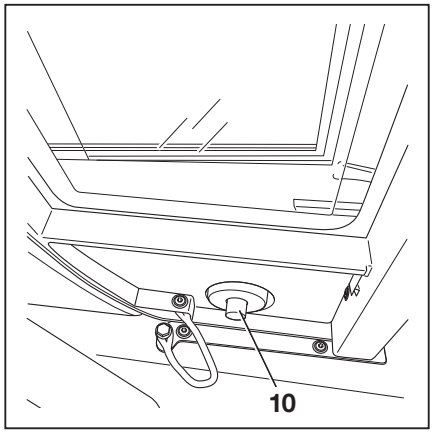

– Remove the square-section key (9) from the support mounting. ▷
– Insert the square-section key (9) into the opening provided (10).
– Turn the square-section key (9).

The cab door sections are locked.

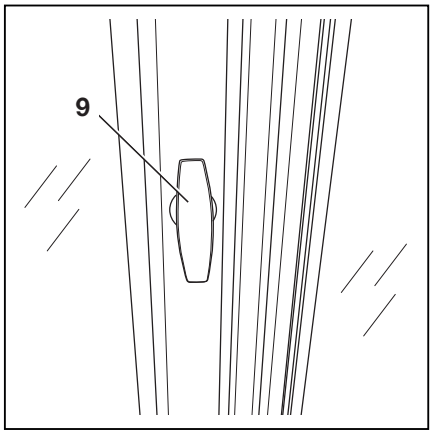


## Opening and closing the side window ▷

**⚠ WARNING**

There is a risk of crushing between the window frame and side window due to the side windows slipping inadvertently during travel.

– Make sure that the handle engages securely in the corresponding stop slot.

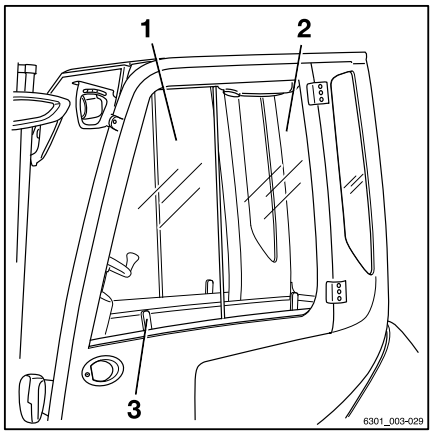


### Opening the front side window:

– Squeeze the handle (3). Slide the front side window (1) backwards.

### Opening the rear side window:

The rear side window (2) can be opened in the same way as the front side window.

### Closing the front side window:

– Slide the front side window (1) forwards using the handle (3) until it snaps into place.

### Closing the rear side window:

The rear side window (2) can be closed in the same way as the front side window.

## Turning the interior lighting on or off (variant) ▷

– To turn the interior lighting on or off, press the push button switch (1) in the middle of the interior lighting.

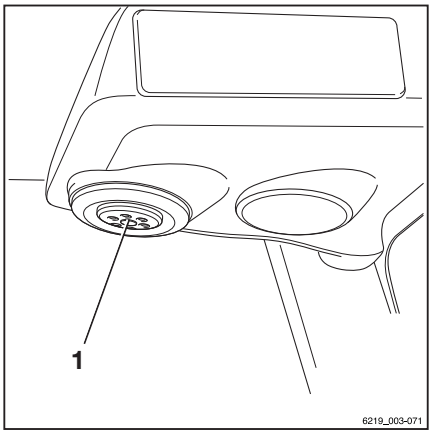


## Radio (variant)

The radio and the loudspeakers are an equipment variant. If the truck is equipped with a radio and loudspeakers, they are integrated into the roof lining.

The description and operation can be found in the separate operating instructions for the radio.

**⚠ WARNING**

The driver's attention is adversely affected by operating the radio or listening to it at excessive volumes while driving or handling loads. Risk of accident!

– Do not operate the radio when driving or when handling loads.
– Adjust the radio volume so that you can still hear warning signals.

# Heating system (variant)

**⚠ DANGER**

**There is a risk of poisoning if heavily polluted surrounding air is aspirated into the closed cab!**

– Do not operate the heating system in the vicinity of storage areas or similar areas in which fuel vapours or fine dust (e.g. coal, wood or grain dust) can build up.

**⚠ DANGER**

**Risk of explosion due to heat!**

The heat can cause gases to expand considerably or to ignite.

– Do not expose spray cans or gas cartridges to the flow of hot air.

**⚠ DANGER**

**Risk of fire due to overheating!**

The heating system can overheat if the hot air cannot escape from it.

The heating system may only be switched on if the blower is running and the heating system is not covered by objects (such as a jacket or cover).

– Always switch the blower on first.

– Do not switch the heating system on until the blower is switched on.

– Move any objects away from the heating system or air distributors.

**⚠ DANGER**

**The heating system housing can become very hot during heating operation. There is a risk of burns if it is touched!**

– Do not touch the heating system housing during operation.

– Only touch the switches provided.

## Operating devices of the heating system

The operating devices of the heating system include:

1 Heating level control knob
2 Blower control knob
3 Air vent control knob

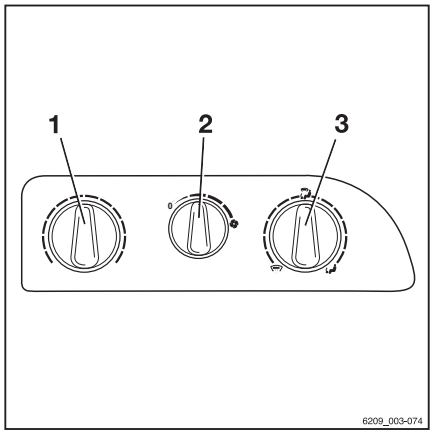


## Switching on the blower and heating system

– Turn the blower control knob (2) to the desired blower level.

The blower runs at the speed level selected via the blower control knob (2).

– Turn the heating level control knob (1) to the desired heating level.

The heater warms the air to the heating level selected via the heating level control knob (1)

– Turn the air vent control knob (3) to the desired position.

## Selecting blower levels

– To select a lower blower output, turn the blower control knob (2) anticlockwise.

– To select a high blower output, turn the blower control knob (2) clockwise.

## Setting heating levels

– To set a lower heater power, turn the heating level control knob (1) anticlockwise.

– To set a higher heater power, turn the heating level control knob (1) clockwise.

## Setting the air vent control knob

– To direct the air flow to the footwell, turn the air vent control knob (3) in an anticlockwise direction to the position.

– To direct the air flow to the windscreen, turn the air vent control knob (3) in a clockwise direction to the position.

The centre position directs the air flow to the footwell and the windscreen.

## Switching off the heating system and blower

– Turn the heating level control knob (1) in an anticlockwise direction until it reaches the stop.

The heating system is shut down.

– Turn the blower control knob (2) in an anti-clockwise direction until it reaches the stop.

The blower is shut down.

## Adjusting the air distributors

The air distributors for the driver are always supplied with air. It is not necessary to adjust the heating system using the operating devices.

– To open the air distributor, push the indentation (1) on the disc.

The discs open.

– Grasp the discs to align the air flow:

The discs can be adjusted to the desired angle. The air distributor can be rotated.

– Press down again to close the discs.

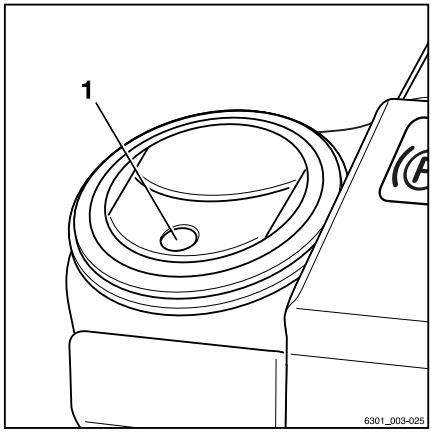


## Changing fuses

**DANGER**

**Risk of fire as a result of short circuits!**

Using the wrong fuses can result in short circuits.

– Use only fuses with the prescribed nominal current.

– The fuses must be replaced only by the authorised service centre.

## Air conditioning (variant) ▷

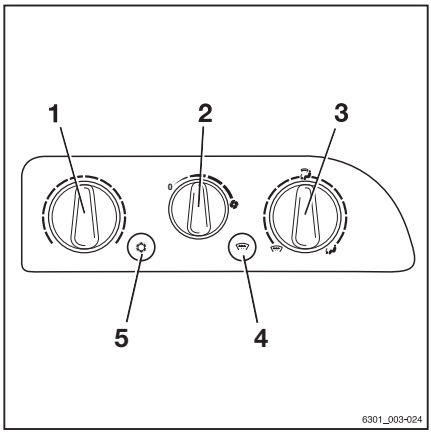


The air conditioning dries the air in the cab to prevent the glass panes misting up. The temperature of the air that is blown out is based on the heating level that has been set. The defrost function can be used to de-ice the windscreen quickly.

The operating devices of the air conditioning include:

1 Heating level control knob
2 Fan control knob
3 Air vent control knob
4 Defrost switch
5 On/off switch

– To adjust the air distributors and to control the blower positions, the heat settings and the air vent control knob, see the section entitled "Heating system (variant)".

### Switching the air conditioning on and off

– Push the on/off switch (5).

The LED on the switch lights up red. The air conditioning is switched on.

– Press the on/off switch (5) again.

The LED on the switch goes out. The air conditioning is switched off.

### Defrost function

The defrost function can be used to de-ice and dehumidify the windscreen quickly. To do this, turn the air vent control knob (3) anti-clockwise to the position. Open the air distributors and direct them onto the windscreen.

– Switch on the air conditioning.

– Push the defrost switch (4).

The LED on the switch lights up red. The air conditioning operates at full power. The highest heating level is selected. This feature operates for a limited period only. To save energy, it switches itself off automatically.

– Press the defrost switch (4) again.

The defrost function is switched off.

## Clipboard (variant)

The clipboard (1) with reading lamp (2) is an equipment variant.

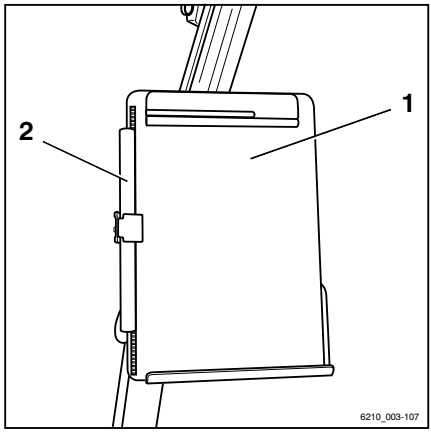


## Push-up roof window (variant)

**⚠ WARNING**

Risk of crushing!

- When closing the roof window, do not reach between the roof window and the overhead guard.
- Do not reach in to touch the components as they are being closed.

The push-up roof window (1) can be pushed up to and locked in three positions:

- Pushed up at the front
- Pushed up at the rear
- Completely pushed up

Two handles (2, 5) and two locking bolts (3, 4) are located on the right-hand side for this purpose.

- To push up and close the roof window, stop the truck and apply the parking brake.

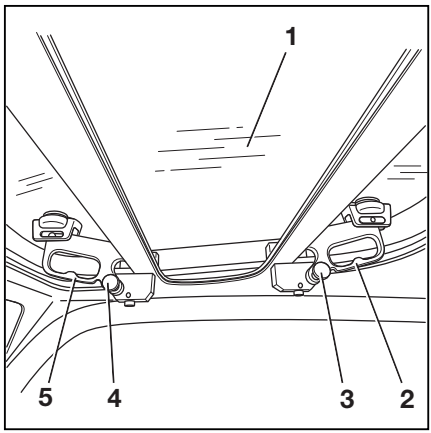


### Pushing up and closing the roof window at the front

- To push up the roof window, pull out the locking bolt (4) with your right hand and keep hold of the locking bolt.
- Use your left hand to take hold of the handle (5) on the roof window (1) and push upwards until the locking bolt (4) engages.

The roof window (1) is held in the pushed-up position

– To close the roof window, pull out the locking bolt (4) with your right hand and keep hold of the locking bolt.

– Use your left hand to take hold of the handle (5) on the roof window (1) and pull down until the locking bolt (4) engages.

The roof window (1) is closed.

## Pushing up and closing the roof window at the rear

– To push up the roof window, pull out the locking bolt (3) with your left hand and keep hold of the locking bolt.

– Use your right hand to take hold of the handle (2) on the roof window (1) and push upwards until the locking bolt (3) engages.

The roof window (1) is held in the pushed-up position

– To close the roof window, pull out the locking bolt (3) with your left hand and keep hold of the locking bolt.

– Use your right hand to take hold of the handle (2) on the roof window (1) and pull down until the locking bolt (3) engages.

The roof window (1) is closed.

## Pushing up and closing the roof window completely

– Follow the same steps as previously described to push up and close the roof window.

## Sun visor and sun blind

The truck can be equipped with a sun visor (2), a sun blind for the roof (1) and a sun blind for the driver's view to the front (4).

- To adjust the sun visor (2), grasp it and move it to the desired position.
- To move the sun blind (4) up and down, grasp the tab (3) and move the sun blind.
- If necessary, fully unroll the sun blind for the roof (1) and attach the ends (5) in the extended position.
- To roll up, slowly roll the blind (1) back up.

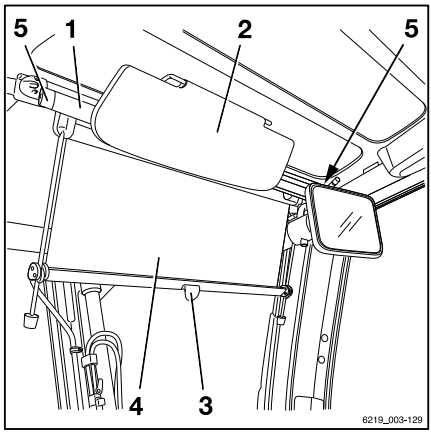

# Trailer operation

## Towed load

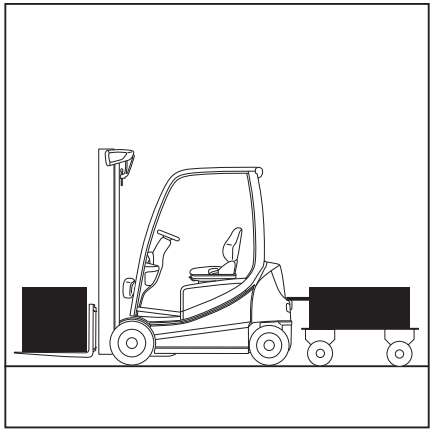

**DANGER**

**There is an increased risk of accident when using a trailer.**

Using a trailer changes the truck handling characteristics. When towing, operate the truck such that the trailer train can be safely driven and braked at all times. The maximum permissible speed when towing is 5 km/h.

- Do **not** exceed the permissible speed of 5 km/h.
- Do **not** couple the truck in front of rail vehicles.
- The truck must not be used to push any kind of trolley.
- It must be possible to drive and brake at all times.

**CAUTION**

Risk of damage to components!

The maximum towed load for occasional towing is the rated capacity specified on the nameplate. Overloading can lead to component damage on the truck. The sum of the actual towed load and the actual load on the fork must not exceed the rated capacity. If the towed load present corresponds to the rated capacity of the truck, it is not permitted to transport a load on the fork at the same time. The load can be distributed between the fork and the trailer.

- Check the load distribution and adjust it to correspond to the rated capacity.
- Observe the permissible rigidity value of the tow coupling.

**CAUTION**

Risk of damage to components!

The maximum towed load only applies when towing unbraked trailers on a level surface (maximum deviation +/- 1%) and on firm ground. The towed load must be reduced if towing on gradients. If necessary, notify the authorised service centre of the application conditions. The service centre will provide the required data.

- Inform the authorised service centre.

**⚠ CAUTION**

Risk of damage to components!

A support load is not permitted.

– Do not use trailers with tillers supported by the tow coupling.

This truck is suitable for the occasional towing of trailers. If the truck is equipped with a towing device, this occasional towing must not exceed 2% of the daily operating time. The manufacturer must be consulted if the truck is to be used for towing on a more regular basis.

## Coupling pin in the counterweight

### Coupling the trailer

**⚠ DANGER**

**There is a risk of fatal injury if the truck rolls away**

If you briefly leave the truck to couple or uncouple it, there is a risk of fatal injury from being run over if the truck rolls away.

– Apply the parking brake.
– Lower the fork to the ground.
– Switch off the truck. Remove the switch key or block access to the truck.

– Take measures to prevent the trailer from rolling away, e.g. using wedges (1). ▷

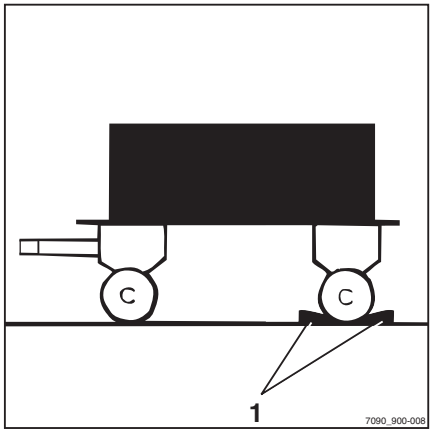

– Push the coupling pin (1) downwards, turn the pin by 90° and pull the pin out.

– Adjust the tiller height.

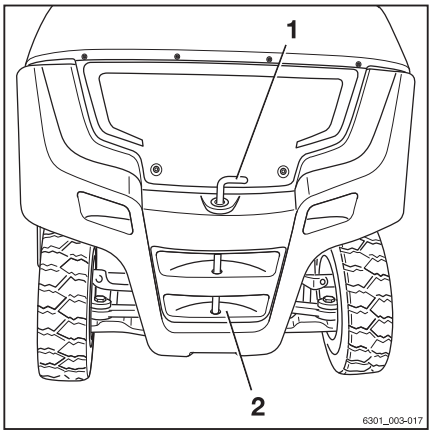


**⚠ DANGER**

**People can become trapped between the truck and trailer.**

When coupling, ensure that there are no persons present between the truck and the trailer.

– Slowly move the truck backwards.

– Moving the truck back allows you to insert the tiller into the recess (2) in the counterweight.

**⚠ DANGER**

**Risk of accident due to damaged or lost clutch components!**

If the coupling pin or securing bush are lost or destroyed during towing, the trailer will work loose and become uncontrollable.

– Only use original coupling pins that have been checked.

– Ensure that the coupling pin is correctly inserted and secured.

– Insert the coupling pin into the counterweight, press the pin downwards against the spring pressure and rotate the pin by 90°.

The coupling pin is locked in this position.

– Remove any items used to prevent the trailer from rolling away.

## Uncoupling the trailer

– Take measures to prevent the trailer from rolling away, e.g. using wedges.

– Push the coupling pin (2) downwards, turn the pin by 90° and pull the pin out.
– Slowly move the truck forwards and guide the tow-bar eye completely out of the recess (2) in the counterweight.
– Insert the coupling pin into the counterweight, press the pin downwards against the spring pressure and rotate the pin by 90°.

The coupling pin is locked in this position.

▷

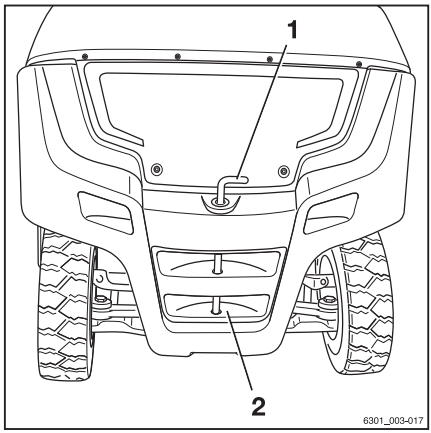


## Automatic tow coupling

**⚠ DANGER**

**Risk of fatal injury from falling truck!**

The tow coupling is not designed for jacking up the truck or loading the truck by crane. It may be deformed or destroyed. The truck may fall over.

– Use the tow coupling only for towing.
– For jacking up and crane loading, use only the designated lifting points.

**⚠ DANGER**

**Risk of fatal injury from detaching trailers!**

The tow coupling is not designed for support loads and could be deformed or destroyed. The supported load or the trailers could come loose.

– The tow coupling should be subjected only to horizontal loads, i.e. the tiller must be horizontal.

**⚠ DANGER**

**Risk to life due to truck rolling away!**

If you briefly leave the truck to couple or uncouple it, there is a risk of fatal injury from being run over if the truck rolls away.

– Apply the parking brake.
– Lower the fork to the ground.
– Switch off the truck and secure it against unauthorised use.

**⚠ DANGER**

**Risk of injury when coupling!**

People can become trapped between the truck and the trailer.

– When coupling, ensure that there are no persons present between the truck and the trailer.

**⚠ WARNING**

Risk of crushing when reaching into the coupling.

When the coupling pin slams shut, there is a risk of crushing limbs in the coupling.

– **Never** reach into the coupling.
– To release the coupling pin, actuate the corresponding lever or use a suitable device (e.g. assembly lever).
– When not in use, close the automatic tow coupling.

**⚠ WARNING**

Risk of damage due to component collision.

A truck with tow coupling needs more room for manoeuvring due to its overhang. The tow coupling can damage the racking or the tow coupling itself when manoeuvring. If a collision with the tow coupling occurs, the tow coupling must be checked for damage such as cracks. A damaged tow coupling must not be used again.

– Always manoeuvre carefully and with sufficient room.
– In the case of a collision, check the tow coupling for damage.
– Have a damaged tow coupling replaced by the authorised service centre.

**⚠ WARNING**

Risk of damage to the tow bar eye or tiller!

Due to the truck's rear wheel steering, the side slewing angle of the tiller may not be adequate. The coupling or the tiller may be damaged! The tow bar eye of the tiller must fit the tow coupling in terms of shape and size.

– Ensure that the tow bar eye and tiller fit correctly.
– Avoid sharp cornering.
– Carefully reverse and manoeuvre.

**⚠ WARNING**

Risk of component damage if the tiller in the tow coupling is tilted!

The tiller should be kept as horizontal as possible when towing. This ensures that the rotation range is sufficient at the top and bottom. The authorised service centre can adjust the assembly height for the tow coupling to the tiller height if necessary.

– Make sure that the tiller is level.

– To change the coupling height, contact the authorised service centre.

**NOTE**

*When manoeuvring in restricted areas, take into account the overhang of the coupling.*

## Coupling model RO*244

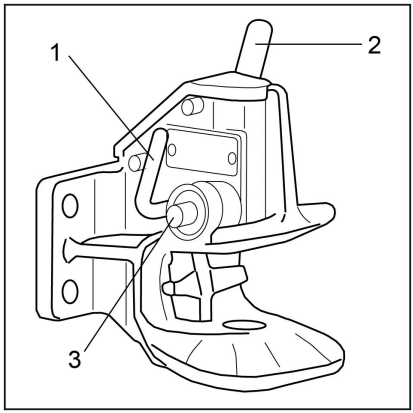


**NOTE**

*Tow coupling RO*244 is intended for a tow-bar eye in accordance with DIN 74054 (bore diameter 40 mm) or DIN 8454 (bore diameter 35 mm).*

– Take measures to prevent the trailer from rolling away, e.g. using wedges.

– Adjust the towing eye of the tiller so that it is in the middle of the towing jaws.

– Push the hand lever (2) upwards until it engages.

The tow coupling is opened.

**⚠ CAUTION**

When being coupled, the tow-bar eye must engage in the middle of the coupling jaw. Failure to follow these instructions could result in damage to the coupling jaw or to the tow-bar eye!

– Ensure that the tow-bar eye enters the coupling jaw centrally.

– Move the truck back slowly until the tow bar eye is inserted centrally into the coupling jaw of the tow coupling and the coupling pin engages.

NOTE

*The coupling pin is correctly engaged if the control pin (3) does not protrude out of its guide.*

**DANGER**

**Risk of accident due to open coupling pin!**

If the coupling pin drops out during towing, the trailer will work loose. It will become uncontrollable.

The control pin (3) must not protrude out of its guide.

– Ensure that the coupling pin is engaged correctly.
– Please note the following:

If the coupling pin does not engage correctly:

– Remove any items used to prevent the trailer from rolling away.
– Move the truck with the trailer forwards approx. 1 m and then move it back slightly.
– On the coupling pin, check again that the control pin does not protrude out of its guide.
– Remove any items used to prevent the trailer from rolling away.
– Tow the trailer.

## Model RO*244 - Closing the coupling ▷

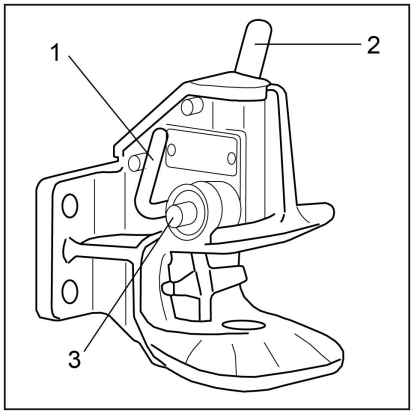


**DANGER**

**Risk of injury from hand becoming trapped!**

Do not reach into the coupling pin area. If, for example, a tow rope is to be secured in the tow coupling, only actuate the tow coupling via the closing lever (1).

– Push the closing lever (1) downwards as far as it will go.

The tow coupling is closed.

## Model RO*244 - Uncoupling the trailer

– Take measures to prevent the trailer from rolling away, e.g. using wedges.
– Push the hand lever (2) upwards until it engages.

The tow coupling is opened.

– Slowly drive the truck forwards until the towing eye and towing jaws are disconnected.

– Close the tow coupling by actuating the closing lever (1).

**NOTE**

*To protect the lower coupling pin bush against contamination, always keep the tow coupling closed.*

## Coupling model RO*245

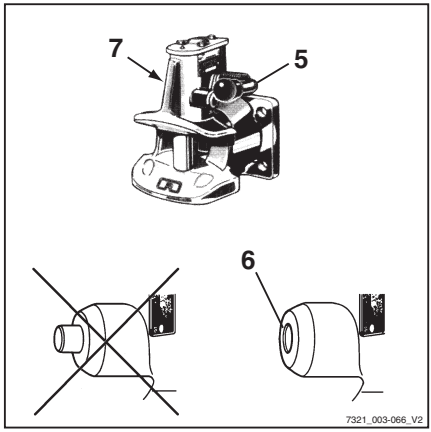


**NOTE**

*Tow coupling RO 245 is intended for a towing eye in accordance with DIN 74054 (bore diameter 40 mm) or DIN 8454 (bore diameter 35 mm).*

– Take measures to prevent the trailer from rolling away, e.g. using wedges.

– Adjust the towing eye of the tiller so that it is in the middle of the towing jaws.

– Push the hand lever (5) upwards.

– The tow coupling is opened.

**DANGER**

**People can become trapped between the truck and trailer!**

When coupling, ensure that there are no persons present between the truck and the trailer.

– Slowly move the truck backwards.

**DANGER**

**Risk of accident due to open coupling pin!**

A protruding safety handle means that the tow bar eye has not been coupled correctly. The trailer must not be towed in this condition.

– Make sure that the control pin does not protrude from the control bush.

– Repeat the coupling process if necessary.

– Remove any items used to prevent the trailer from rolling away.

– Tow the trailer.

## Uncoupling model RO*245

– Take measures to prevent the trailer from rolling away, e.g. using wheel chocks.

– Push the hand lever (5) upwards.

– Slowly drive the truck forwards until the towing eye and towing jaws are disconnected.

– Push down the closing lever (7) on the left-hand side of the tow coupling as far as it will go.

The tow coupling is closed.

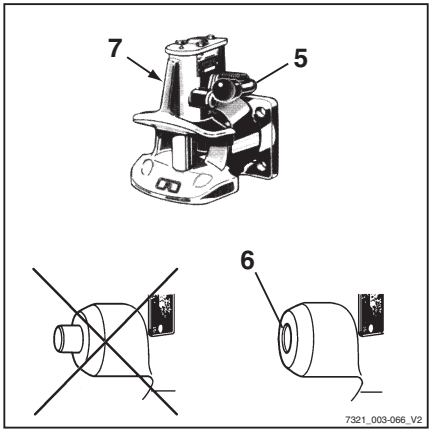


## Towing trailers

– Drivers who are towing a trailer for the first time must practise driving with a trailer in a suitable area.

– When passing through narrow road areas (entrances, gates etc.), observe the dimensions of the trailer and load.

– When towing multiple trailers, ensure a sufficient minimum distance to fixed installations when turning and cornering.

The permissible length of the trailer trains depends on the roadways to be driven and may need to be determined during the test drive.

It is the responsibility of the operating company to instruct the drivers regarding the permissible number of trailers and, where required, any additional speed reductions on individual sections of the route.

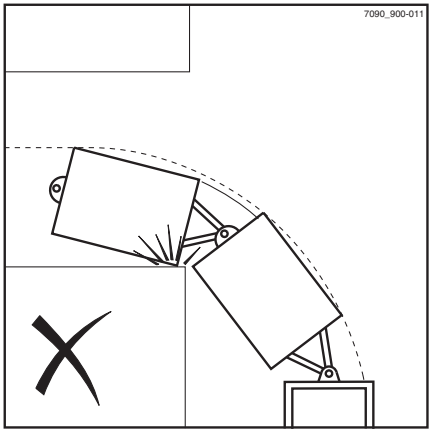


NOTE

*Please observe the definition of the following responsible persons: "operating company" and "driver".*

# Cold store application

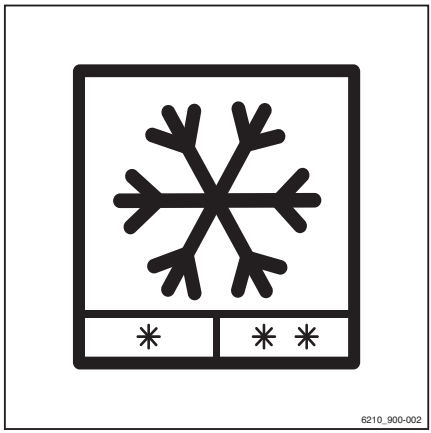


The truck is suitable for use in cold stores. Cold store equipment with low-temperature hydraulic oil may be required.

The truck is equipped for two different types of application.

The cold store symbol indicates the variant with cold store equipment that uses low-temperature hydraulic oil.

The display-operating unit is heated in this variant.

As another variant, the truck can be equipped with a driver's cab with a heating system.

## Types of application

There are two different types of cold store application for the truck, distinguished by two different temperature ranges.

1. Constant use in the temperature range down to –5°C, short-term use at temperatures down to –10°C.
   Operation possible with standard equipment and standard hydraulic oil.
2. Alternating between indoor use down to –32°C and outdoor use up to +25°C, briefly up to +40°C.
   Operation possible only with cold store equipment and low-temperature hydraulic oil.

**NOTE**

*When changing to a different type of hydraulic oil, the authorised service centre must adjust the parameters of the truck control unit.*

## Operation

**WARNING**

Risk of injury!

If condensation water freezes in the cold store, do not try to free parts that have become stuck with your hands.

## Cold store application

**⚠ WARNING**

Risk of accident due to restricted operational readiness!

At very low temperatures, the display-operating unit requires a longer period of time to reach operational readiness. The truck is not ready for operation during this time.

This status is shown in the display as follows:

STILL ❄

– Only use the drive direction switch to perform emergency driving in an emergency. Refer to the section entitled "Emergency driving via the drive direction switch/drive direction selection lever" in the chapter entitled "Procedure in emergencies".

**⚠ CAUTION**

Changing from a cold internal temperature to a warm outside temperature may result in the formation of condensation water. This water may freeze on re-entry to the cold store, blocking moving parts of the truck.

It is essential that close attention is paid to the duration of deployment in the different temperature ranges for both types of application.

Before being used in the cold store, the truck must be dry and warmed up.

The truck must not leave the cold store area for more than 10 minutes. By adhering to this rule, condensation water will not have time to form.

If the truck stays outside for more than 10 minutes, it must remain there at least until the condensation water has drained away and the truck has dried off. Depending on the weather, this will take at least 30 minutes.

Limiting the load dynamics to load program 1 during the warm-up phase ▷

NOTE

*During the warm-up phase, the load dynamics are limited to load program 1. The adjacent symbol appears on the display until the warm-up phase is complete.*

– To ensure operational safety, drive the truck for approximately five minutes and actuate the brake several times.

– Actuate all hydraulic lifting functions several times.

This warm-up phase is necessary to ensure that the oil reaches the operating temperature.

– Refer to the section entitled "Warming up the hydraulic oil at cold ambient temperatures" in the chapter entitled "Operation — Checks and tasks before daily use."

– Always park the truck outside the cold store.

**⚠ CAUTION**

Risk of component damage!

The lead-acid batteries must not be left in the cold store overnight without power uptake or charging.

– Charge the battery outside the cold store and operate the truck using a replacement battery.

## Using batteries in the cold store

To compensate for the reduction in capacity at low temperatures, it is advisable to use lead-acid batteries with the maximum nominal capacity in the respective battery dimensions for the truck series.

Electric trucks must not be parked in a cold area for any longer than necessary. This also applies to unused batteries. The charging station and the parking area for trucks and batteries must be at normal room temperature (not below 10°C). Charging is extremely slow at low temperatures. At temperatures below 10°C, the battery cannot be fully charged with the usual charging parameters.

- Charge the battery fully before each shift.
- During the gassing phase, always top up with distilled water.

The distilled water will mix with the battery acid so that it does not freeze.

Water top-up systems must not be used at temperatures below 0°C, as this could cause the systems and the water present in the hose lines to freeze.

The battery voltage when discharged is thus generally lower at low temperatures. The final discharged voltage is reached earlier, i.e. the capacity is lower.

# Display messages

## Messages

Certain truck conditions may cause event-related messages to be shown on the display of the display-operating unit.

There are messages about operation and messages about the truck. If a message about operation appears, the display-operating unit will prompt you to perform an action. A message about the truck means that the truck control unit has detected a fault.

The following types of message may appear individually or in combination:

- A graphic symbol
- The message
- A code consisting of a letter and a four-digit number

The message is displayed until either the cause has been corrected or the message has been acknowledged.

In the case of successive events, the respective messages are displayed one after another on the display.

## Messages about operation

If messages about operation appear on the display-operating unit, an action must be carried out.

| Code | Shown in display | Cause/action |
|---|---|---|
| | Log in | The access authorisation (variant) is preventing the use of the truck.<br>- Enable the access authorisation. |
| | Battery empty | The charge state of the battery is too low for truck use.<br>- Charge the battery.<br>Special feature for STILL RXE:<br>The drive unit is limited to 5 km/h.<br>The working hydraulics are limited in performance. |

| Code | Shown in display | Cause/action |
|---|---|---|
| V6905<br>V6985<br>V6986<br>V6987<br>V7038 | `Battery: Emergency mode` | The charge state of the battery is low. The truck experiences a power reduction.<br>- Charge the battery.<br>Special feature for STILL RXE:<br>The drive unit is limited to 5 km/h.<br>Only the "Classic" drive programme can be called up. "Sprint mode" is blocked.<br>Load programmes 2 and 3 are blocked.<br>The working hydraulics are limited in performance.<br>- Switch the truck off and on again.<br>- If the message continues to appear, please contact the authorised service centre. |
| | `Check battery` | This message about the on-board charger is triggered by different causes:<br>A possible fault in the electrical connection between the battery and the on-board charger.<br>The fuse for the on-board charger on the truck or the on-board charger is defective.<br>The battery has a fault.<br>The battery has exceeded its service life.<br>The battery is incorrectly configured.<br>- Contact your authorised service centre. |
| | `Battery recovery low` | The battery is too cold and/or too fully charged.<br>The battery can only absorb limited current from the energy recovery of the regenerative brake.<br>As a result, the regenerative brake only offers limited deceleration.<br>The service brake is still fully operational.<br>- Drive the truck **carefully** while actuating the hydraulic functions.<br>Special feature for STILL RXE:<br>The regenerative brake is deactivated or restricted.<br>- See also the section entitled "Operating the service brake" in the "Driving" chapter. |
| V6962 | `Check battery type` | This message about the on-board charger is triggered by different causes:<br>The battery is defective.<br>The wrong battery is connected.<br>- Contact your authorised service centre. |
| | `Check battery acid level` | The acid level of the lead-acid battery is too low.<br>- Do not continue to use the truck with this battery.<br>- Check the acid level of the battery. Correct if necessary. |

| Code | Shown in display | Cause/action |
|---|---|---|
| V6965 | Battery temperature high | The charging process has been automatically aborted due to the battery temperature being too high. This message about the on-board charger is triggered by different causes:<br>The truck was heavily used before charging and the battery has become very hot.<br>The ambient temperature is too high and the battery cannot cool down.<br>The charging profile is configured incorrectly.<br><br>- Allow the battery to cool down.<br>- Allow the battery temperature symbol on the display-operating unit to flash. Change the "Start" symbol to "Pause". |
| | Check battery door sensor | The battery door sensor does not detect that the battery door is closed.<br>- Make sure that the lock on the battery door is engaged.<br>- If the message continues to appear, please contact the authorised service centre. |
| | Close battery door | The battery door is open. The truck will not move.<br>- Close the battery door. |
| | Battery too cold | The lithium-ion battery is too cold.<br>- Move the truck to a warmer environment. |
| | Release brake pedal ! | The desired action is only possible after releasing the brake pedal.<br>- Release the brake pedal. |
| | Acceleration restricted. Temperature ! | If the temperature at the drive units is too high, this message appears. Sprint mode is no longer available. The truck switches to Classic mode. Acceleration is restricted. |
| | Curve Speed Control active ! | Curve Speed Control reduces the curve speed.<br>- No action is required. |
| | Data transmission required ! | If the truck is equipped with this variant, data transmission must be carried out.<br>- See the associated instructions. |
| | Diagnostic mode active | This message is not displayed during normal operation.<br>- Contact your authorised service centre. |
| | Set pump speed | If an attachment is fitted and no pump speed has been set for its direction of movement, this message will be displayed.<br>- Set the revolution speed with the access authorisation. |

| Code | Shown in display | Cause/action |
|---|---|---|
| V7059 | Electrolyte circulation not working ⚠ | The electrolyte circulation pump is not working. The charging process is continued without electrolyte circulation. Intermediate charging can cause damage to the battery.<br>- Cancel the charging process.<br>- Contact your authorised service centre. |
| | Development mode active ⚠ | This message is not displayed during normal operation.<br>- Contact your authorised service centre. |
| | Drive unit blocked ! | This message follows earlier messages, e.g. overtemperature. It is not possible to drive the truck.<br>- Wait until the message disappears. If necessary, switch the truck off and on again.<br>- If the message continues to appear, please contact the authorised service centre. |
| | Sit on driver's seat | The truck is equipped with a seat contact switch. If the driver's seat is not occupied, the drives are disabled.<br>- Sit on the driver's seat. |
| | Secure truck against rolling away ⚠ | If the truck control unit detects a movement of the truck without the accelerator pedal being actuated, this message appears.<br>- Apply the parking brake.<br>- If necessary, secure the truck with wedges so that it cannot roll away. |
| | Secure truck against rolling away ⚠ | The load on the driver's seat is released but the parking brake cannot engage due to a defect.<br>- Secure the truck with wedges so that the truck does not roll away. |
| | Switch off truck? | If the truck is switched off without having first applied the parking brake, this message appears.<br>- Apply the parking brake. |
| | Switch off truck anyway? | If the truck is to be switched off even though the parking brake is not applied, this message appears.<br>- Secure the truck with wedges so that the truck does not roll away. |
| | Fault: Internal charger | The fan in the battery compartment for charging lead-acid batteries via the quick charge access is defective.<br>- Do not charge lead-acid batteries via the quick charge access.<br>- Contact your authorised service centre. |

| Code | Shown in display | Cause/action |
|---|---|---|
| | Truck stop: Access system | The access authorisation (variant) is preventing the use of the truck. This can be caused by entry of an incorrect code.<br>- Enable the access authorisation. |
| | Fault: Battery | The truck control unit detects an error in the lithium-ion battery.<br>- Switch the truck off and on again.<br>- If the message continues to appear, please contact the authorised service centre. |
| | Fault: Battery | The truck control unit detects an error in the lithium-ion battery.<br>- Switch the truck off and on again.<br>- If the message continues to appear, please contact the authorised service centre.<br>Special feature for STILL RXE:<br>The truck will brake to a standstill.<br>The drive unit is blocked.<br>The working hydraulics are blocked. |
| V7074<br>V7051 | Mains voltage error | This message about the on-board charger is triggered by different causes:<br>The fuse for the power supply has been triggered.<br>There is a defect in the power supply.<br>There is a power failure.<br>- Re-establish the power supply.<br>When the power supply has been re-established, the charging process resumes automatically. |
| | Apply parking brake | If the truck control unit detects a movement of the truck without the accelerator pedal being actuated, this message appears.<br>- Apply the parking brake. |
| | Release parking brake | The desired action is only possible after releasing the parking brake.<br>- Release the brake pedal. |
| | Check parking brake | The truck control unit detects that the braking force of the electric parking brake is reducing.<br>- Secure the truck with wedges so that the truck does not roll away.<br>- Contact your authorised service centre. |
| | Parking brake cannot be applied | The parking brake cannot be applied due to a technical fault.<br>- Apply the parking brake according to the section entitled "Malfunctions in the electric parking brake".<br>- Secure the truck with wedges so that the truck does not roll away. |

| Code | Shown in display | Cause/action |
|---|---|---|
| | Parking brake cannot be applied | The parking brake cannot be applied due to a technical fault.<br>- Apply the parking brake according to the section entitled "Malfunctions in the electric parking brake".<br>- Secure the truck with wedges so that the truck does not roll away. |
| | Apply parking brake via button | The electric parking brake is not applying automatically.<br>- Apply the parking brake by pressing the button. |
| | Release parking brake via button | The electric parking brake cannot be released automatically.<br>- Release the parking brake by pressing the button. |
| | Parking brake: Maintenance required | The truck control unit detects that the electric parking brake needs servicing.<br>- Secure the truck with wedges so that the truck does not roll away.<br>- Contact your authorised service centre. |
| | Lower forks ! | This message appears e.g. for precision load measurement (variant).<br>- Lower the fork carriage. |
| | Lift height restriction active ! | The lift height restriction (variant) is switched on.<br>- Observe the heights of ceilings and entrances. |
| | Close cab door or seat belt ! | If the seat belt is not fastened and the cab door (variant) is not closed, the driving speed is limited to 4 km/h and this message appears.<br>- Close the cab door or fasten the seat belt. |
| | Close cab door ! | If the cab door is opened while the truck is in motion, the truck brakes automatically to a speed of 4 km/h.<br>- Close the cab door. |
| | Configuration: Please wait | This message is not displayed during normal operation.<br>- Contact your authorised service centre. |
| | Remove charging cable | If the truck is equipped with an integrated charger (variant) and charging is complete, this message appears.<br>- Disconnect the charger plug from the plug connection on the truck. |

| Code | Shown in display | Cause/action |
|---|---|---|
| A5902<br>V6954 | Re-insert charging plug | The charging button on the truck connector for the charging cable has been held down too long.<br>- Pull the truck connector out and re-insert it after approx. 2 seconds.<br>The charger starts a new charging process. |
| | Charging port fan error | The fan in the battery compartment for charging with the quick charge access has reported an error.<br>- Check the charging fan.<br>- Contact the authorised service centre if required.<br>- If the error has been rectified, acknowledge the error on the display-operating unit. |
| | Unsent data will be overwritten ! | If the truck is equipped with this variant, data transmission must be carried out.<br>- See the associated instructions. |
| | Emergency off active | If the truck is switched on and an operating device is actuated when the emergency off switch is pressed, this message appears. The desired action is only possible once the emergency off switch is unlocked.<br>- Unlock the emergency off switch. |
| | Emergency mode ! | If the truck experiences a power reduction, for example due to a battery charge state that is too low, this message appears.<br>- Observe the previous message. |
| | Emerg. direct. via drive direction lever ⚠ | The drive direction switch on the hydraulic operating device has failed.<br>Emergency driving is possible; to do so:<br><br>- Move the drive direction selection lever on the travel direction selector and indicator module to the desired direction of travel and hold the drive direction selection lever in position.<br>- Drive the truck to a safe area and park it securely.<br>- Contact your authorised service centre. |
| | Emerg. direct. via drive direction switch ⚠ | The drive direction switch on the travel direction selector and indicator module has failed.<br>Emergency driving is possible; to do so:<br>- Set the drive direction switch on the hydraulic operating device to the desired direction of travel and hold the drive direction switch in position.<br>- Drive the truck to a safe area and park it securely.<br>- Contact your authorised service centre. |

| Code | Shown in display | Cause/action |
|---|---|---|
| V7001<br>V7062 | On-board charger power reduction - service required ⚠ | There is a fault with the charging program. The charging process is performed with reduced power.<br>- Contact your authorised service centre. |
| | Parameter calibration ⟳ | This message is not displayed during normal operation.<br>- Contact your authorised service centre. |
| | Seatbelt sequence ! | If the configured sequence for applying the restraint systems is not observed, this message appears.<br>- Fasten the seat belt. |
| | Close restraint system 🔓 | If, for example, the truck is equipped with a bracket as a restraint system and the accelerator pedal is actuated, this message appears. The truck will not move.<br>- Close the restraint system. |
| | Vibrating function blocked – overload ⚠ | If the vibrating function (variant) is overloaded by an excessive load, this message appears. The shake function will remain unavailable as long as this situation persists. |
| | Switch on key switch ! | If the hazard warning system (variant) is switched on when the truck is switched off, the display-operating unit remains active. Then, when a truck function is called up, this message appears.<br>- Switch on the truck. |
| | Shock event detected ! | If the truck control unit detects a very strong acceleration or deceleration, e.g. in the event of an accident, this message appears. |
| | Service required 🔧 | If the maintenance interval has been reached, this message appears.<br>- Contact your authorised service centre. |
| | Service mode active ⚠ | This message is not displayed during normal operation.<br>- Contact your authorised service centre. |
| | Close seat belt | If the seat belt is not fastened, the driving speed is limited to 4 km/h and this message appears.<br>- Fasten the seat belt. |
| | Are you sure? ? | If the display-operating unit is expecting confirmation from the driver, this message appears.<br>- Continue or cancel the input prompt. |
| | Software update<br>Please wait ⟳ | The on-board charger software is being updated. The update is complete when the charging process ends.<br>- Wait until the charging process begins automatically. |

| Code | Shown in display | Cause/action |
|---|---|---|
| | Enable sprint mode ! | If the battery is charged after blocking sprint mode or a normal temperature is reached, this message appears. Sprint mode can be used again once the truck has been restarted. |
| | Sprint mode blocked – battery | If the battery experiences under voltage or too high a temperature, this message appears. Sprint mode is no longer available.<br>- Observe the previous message. |
| | Sprint mode blocked – temperature | If the temperature at the drive units is too high, this message appears. Sprint mode is no longer available.<br>- Observe the previous message. |
| | Dead man switch | If the truck is equipped with a foot switch, and a truck function is called up when the foot switch is not actuated, this message appears.<br>- Actuate the foot switch. |
| | Overload | With the "overload protection" variant, this message appears if an excessive load is picked up.<br>- Set down the load. |
| | Overtemp. Drive unit ! | The drive units are protected against overtemperature. If the temperature at the drive units is too high, this message appears.<br>Acceleration and maximum speed are reduced.<br>- Allow the truck to cool down. |
| | Overtemp.: Battery | If the truck control unit detects an excessive battery temperature, this message appears.<br>- Allow the truck to cool down. |
| | Monitoring: Electrics | A sensor for monitoring the acid level of the battery has failed.<br>Do not continue to use the truck with this battery.<br>- Have any faults rectified by the authorised service centre. |
| | Factory mode active | This message is not displayed during normal operation.<br>- Contact your authorised service centre. |
| | Access expired ! | If the truck is equipped with this variant, this message might appear.<br>- See the associated instructions. |
| | Access denied ! | |
| | Access expires in < 1 month ! | |
| | Access expires in < 1 day ! | If the truck is equipped with this variant, this message might appear.<br>- See the associated instructions. |
| | Access expires in < 1 week ! | |

| Code | Shown in display | Cause/action |
|---|---|---|
| | Access expires in < 2 days ! | |
| | Access expires in < 3 days ! | |

## Messages about the truck

If messages with a code appear on the display-operating unit, the truck control unit has detected a fault. The message with a code is stored in the message list until the cause of the message is corrected. The saved messages can be called up from the "message list".

If, for example, the reflector or the lift-height sensor is contaminated, it usually helps to clean these components.

– Switch the truck off and on again.

– If the message still appears, please contact the authorised service centre.

The messages are sorted in ascending order according to their code:

| Code | Shown on display | Description/possible solution |
|---|---|---|
| A2305 | Fault: Control unit | Collective fault on the control unit |
| A2899 | Monitoring | Collective fault of the process monitoring |
| A3027 | Fault: Seat switch | The seat switch does not open<br>- Stand up from the driver's seat and sit down again. |
| A3035 | Fault: Brake fluid | Brake fluid switch |
| A3143 | Check lift height sensor and reflector | Lift-height sensor measurement error |
| A5934 | Re-insert charging plug | Error on the charging connector detection<br>- Disconnect the connection assembly and reconnect it. |
| A5961 | Battery overtemperature | Overtemperature of the lithium battery<br>- Switch off the truck and leave it to cool down. |
| A5962 | Battery too cold | Insufficient lithium battery temperature<br>- Move the truck to a warmer environment. |
| A5986 | Fault: Control unit | General battery current measurement |
| A5993 | Fault: Internal charger | On-board charger collective fault |
| A6502 | Overtemp.: Parking brake | Electric parking brake detects overtemperature |

| Code | Shown on display | Description/possible solution |
|---|---|---|
| A6510 | `Fault: Parking brake` ⓘ | Electric parking brake detects fatal fault |
| A6511 | `Fault: Parking brake` ⓘ | Brake cannot release |
| A6512 | `Fault: Parking brake` ⓘ | Brake cannot apply |
| None | `Error` ⚠ | General fault |

# Procedure in emergencies

## Emergency shutdown

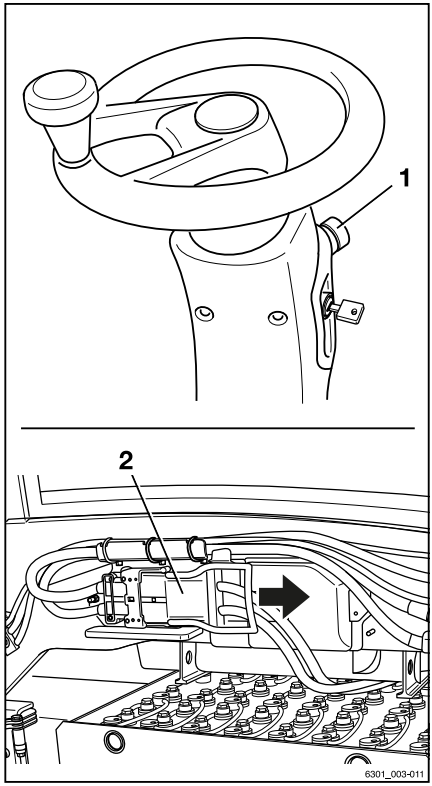


**⚠ WARNING**

No electric braking assistance is available when the emergency off switch is actuated!

Actuating the emergency off switch (1) will disconnect the drives from the power supply. The truck will not be held on a slope by the regenerative brake.

– To brake, actuate the service brake.

**⚠ CAUTION**

Actuating the emergency off switch (1) disconnects the drives from the power supply. Disconnecting the battery male connector (2) disconnects the entire truck from the power supply.

– Only use this safety system in an emergency or in order to safely park the truck.

**⚠ CAUTION**

Potential for damage to the battery male connector!

If the battery male connector is disconnected while the key switch is on (under load), an arc will be produced. This can lead to erosion at the contacts, which considerably shortens the service life of the contacts.

– Switch off the key switch before disconnecting the battery male connector.

– Do not disconnect the battery male connector while the key switch is switched on, except in an emergency.

In an emergency, all functions of the truck can be shut down:

– Press the emergency off switch (1) or disconnect the battery male connector (2).

**Pressing the emergency off switch** (1) **has the following effect in drive mode:**

- No reduction in truck speed when the accelerator pedal is released, according to the drive programme selected. The truck will coast
- The parking brake is applied until the truck comes to a stop
- The regenerative brake does not function during the first part of brake pedal travel.

To decelerate the truck with the mechanical brake, the brake pedal has to be pressed down further

- No power steering effect; the steering forces are increased by the remaining emergency steering function
- The "Curve Speed Control" system (automatic reduction in truck speed when cornering) does not function. Decelerate the truck with the service brake by depressing the brake pedal
- No hydraulic functions are available

## Procedure if truck tips over ▷

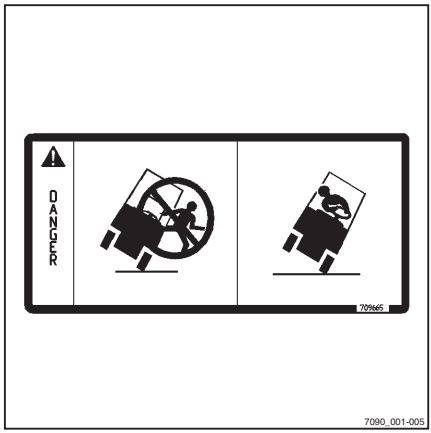


**⚠ DANGER**

**If the truck tips over, the driver could fall out and slide under the truck with potentially fatal consequences. There is a risk to life.**

Failure to comply with the limits specified in these operating instructions, e.g. driving on unacceptably steep gradients or failing to adjust speed when cornering, can cause the truck to tip over. If the truck starts to tip over, do not leave the truck under any circumstances. This increases the danger of being hit by the truck.

– Do not release your seat belt.

– Never jump off the truck.

– You must adhere to the rules of behaviour if the truck tips over.

### Rules of behaviour if truck tips over:

– Hold onto the steering wheel with your hands.

– Brace your feet in the footwell.

– Bend your upper body over the steering wheel.

– Bend your body against the direction of the fall.

## Emergency hammer

The emergency hammer is used to rescue the driver if he is shut inside the cab in a hazardous situation, for example if the truck has toppled over and the cab door cannot be opened.

Single-pane safety glass can be struck relatively safely using the emergency hammer in order for the driver to escape or be rescued from the danger area.

### Using the emergency hammer

**⚠ WARNING**

When glass is smashed there is a risk of injury caused by glass splinters!

When the cab glass is smashed, splinters of glass can shoot into the face and cause damage to skin and eyes through cuts. When a pane of glass is smashed, the face should be turned away and covered with the crook of the free arm.

– Protect the face when smashing a pane of glass.

– Pull the emergency hammer out of its support mounting at the handle.

– Using one of the two metal tips on the head of the emergency hammer, hit the pane of glass with force until it breaks.

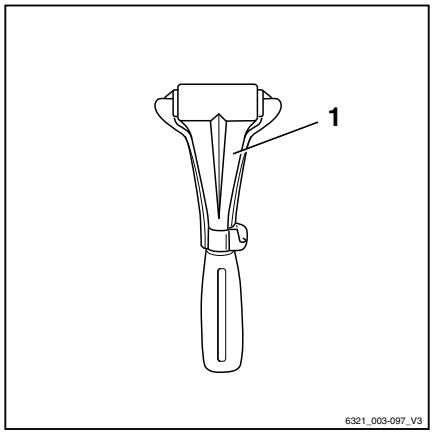


## Emergency driving via the drive direction switch/drive direction selection lever

If the truck is equipped with two independent operating devices for the drive direction and one of these operating devices fails, the truck can be emergency driven to leave a hazardous area using the operating device.

As the truck can only be moved to a limited extent, this poses a risk of accident.

These are the possible controls for the drive direction:

- The drive direction switch on the operating device for the hydraulic functions
- The drive direction selection lever on the travel direction selector and indicator module (variant)

This emergency operation is possible in the following situations:

- The drive direction switch on the operating device for the hydraulic functions has failed.

  The message `Emerg. direct. via drive direction lever` ⚠ appears.
- The drive direction selection lever on the travel direction selector and indicator module (variant) has failed.

  The message `Emerg. direct. via drive direction switch` ⚠ appears.
- The temperature of the display-operating unit is too low.

  This status is shown in the display as follows:

  STILL ❄
- The display-operating unit has failed.

To perform emergency driving, proceed as follows:

– Sit on the driver's seat.

– Fasten the seat belt.

– Release the parking brake.

– Push the drive direction switch/drive direction selection lever in the desired drive direction.

– Press the accelerator pedal.

– Drive the truck to a safe area and park the truck safely.

– If the error occurs frequently, contact the authorised service centre.

## Emergency lowering

If the hydraulic controller fails whilst a load is raised, emergency lowering can be performed. An emergency lowering screw designed for this purpose is located on the valve block.

**⚠ DANGER**

**There is a risk to life from falling loads or from truck components being lowered.**

- Do not walk beneath the raised load.
- Adhere to the steps detailed below.

- Remove the lower lid (1) on the right-hand side of the footwell panelling next to the accelerator pedal. ▷

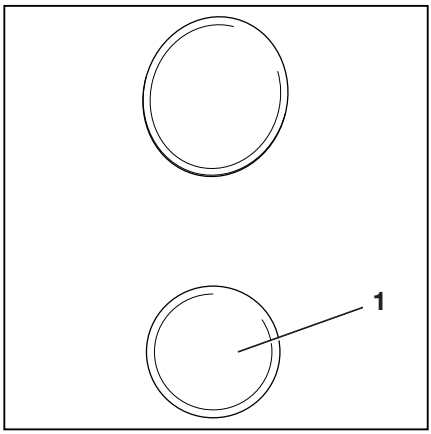


- Remove the hexagon socket wrench (2) from the compartment on the right next to the driver's seat. ▷

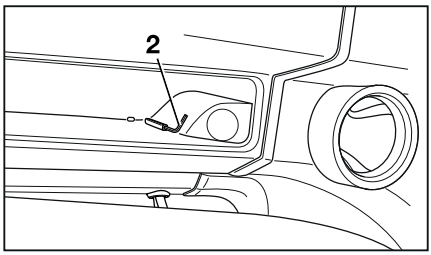

– Using the hexagon socket wrench, turn the emergency lowering screw (3) a maximum of 1.5 revolutions to loosen it. ▷

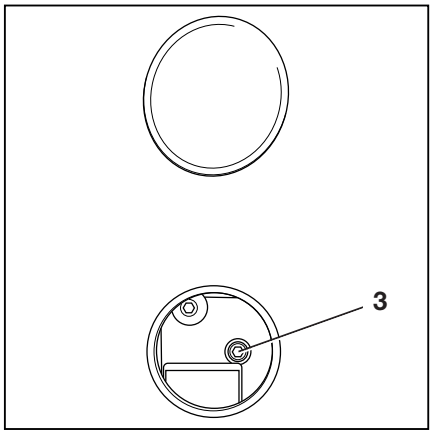


**⚠ WARNING**

The load is lowered!

Unscrewing the emergency lowering screw regulates the lowering speed.

– Note the list of points below.

**The following applies:**

- Tightening torque:
  Max. 2.5 Nm
- Unscrewing the emergency lowering screw slightly:
  The load lowers slowly
- Unscrewing the emergency lowering screw further:
  The load lowers quickly

**After lowering:**

– Re-tighten the emergency lowering screw.

– Return the hexagon socket wrench to the support mounting in the compartment.

– Refit the lid.

**⚠ DANGER**

**If the truck is operated while the hydraulic controller is blocked, there is an increased risk of accidents.**

– After the emergency lowering procedure, have the malfunction rectified.

– Notify the authorised service centre.

# Emergency actuation of the electric parking brake

**DANGER**

**There is a risk of fatal injury from being run over if the truck rolls away.**

The truck can roll away when the parking brake is released.

– In an emergency, secure the truck with wedges on the downhill-facing side to prevent it from rolling away.

– Manually release the parking brake only when the truck is at a standstill with the fork lowered.

The electric parking brake can be released and applied via an emergency actuation mechanism.

The emergency release of the electric parking brake must be actuated under the following conditions:

- The parking brake is not functioning properly.
- The parking brake is not being supplied with power (e.g. defective battery).
- The truck is being transported without a battery.

**NOTE**

*If the parking brake is released via the emergency actuation mechanism, it is possible to drive the truck at a low speed.*

- *The truck can be moved out of the hazardous situation or to the repair location.*
- *Driving with a faulty parking brake requires the driver to be especially vigilant.*

– Lift the cover (1) and fold it up. ▷

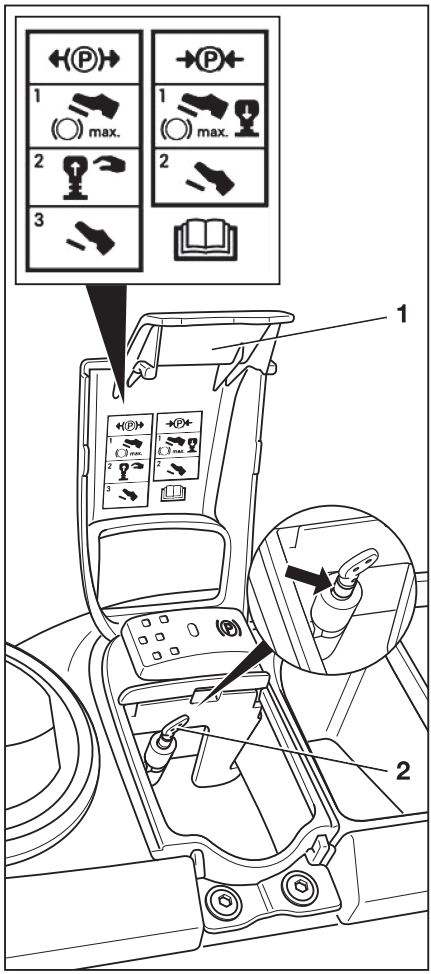


**Release parking brake ←Ⓟ→**

**⚠ CAUTION**

Risk of damage to components.

If the emergency actuation mechanism (2) will not move, the brake pedal has not been depressed far enough. Pulling too hard can damage the emergency actuation mechanism.

– Depress the brake pedal further.

– Pull the emergency actuation mechanism (2) with a maximum of 50 N.

– To release the mechanism, fully depress the brake pedal and hold it down.

– Remove and hold on to the emergency actuation mechanism (2).

– Release the brake pedal. Let go of the emergency actuation mechanism (2).

Once two grooves are visible (see arrow), the parking brake is released.

**Apply parking brake →Ⓟ←**

– Fully depress the brake pedal.

The emergency actuation mechanism (2) returns to its initial position.

– Release the brake pedal.

Once only one groove is visible (see arrow), the parking brake is applied.

– If the status of the parking brake cannot be reliably determined from the position of the emergency actuation mechanism, secure the truck with wedges.

# Towing

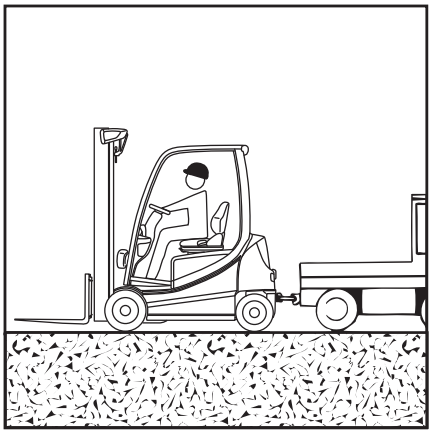

## Safety information

**⚠ DANGER**

**The brake system on the towing vehicle may fail. Risk of accident!**

If the brake system of the towing vehicle is not adequately sized, the vehicle may not brake safely or the brakes may fail. The towing vehicle must be able to absorb the pulling and braking forces from the unbraked towed load (total actual weight of the truck).

– Check the pulling and braking forces of the towing vehicle.

**⚠ DANGER**

**The truck could drive into the towing vehicle when the towing vehicle brakes. Risk of accident!**

If a rigid connection has not been used for power transmission in two directions during towing, the truck may drive into the towing vehicle when the towing vehicle brakes. For safety reasons, only a tested tow bar may be used.

– Use a tested tow bar.

**⚠ CAUTION**

If the truck drive between the drive motor and the drive axle is not interrupted, the drive may be damaged.

– Set the drive direction switch to the neutral position.

**⚠ CAUTION**

Potential for damage to the battery male connector!

If the battery male connector is disconnected while the key switch is on (under load), an arc will be produced. This can lead to erosion at the contacts, which considerably shortens the service life of the contacts.

– Switch off the key switch before disconnecting the battery male connector.

– Do not disconnect the battery male connector while the key switch is switched on, except in an emergency.

**⚠ DANGER**

**There is a risk of fatal injury during manoeuvring!**

People can be crushed between the truck and towing vehicle during manoeuvring.

The towing vehicle may only be manoeuvred and the tow bar may only be attached using a second person as a guide. This ensures that the driver of the towing vehicle and the mechanic attaching the tow bar are aware of possible risks.

– Only manoeuvre with a guide.

**⚠ WARNING**

Risk of accident if the hydraulics fail!

If the hydraulics fail, the power steering will no longer work. The steering will be stiff.

– Select a towing speed that allows the truck and towing vehicle to be braked and controlled effectively at all times.

**⚠ WARNING**

Risk of accident if the truck is not steered!

If the truck is not steered while it is being towed, the truck may veer out in an uncontrolled manner.

The truck being towed must also be steered by a driver.

The driver of the truck being towed must sit in the driver's seat and fasten the seat belt before towing.

– Use the available restraint systems!

## Procedure

– Set down the load and lower the fork arms close to the ground.

– Set the drive direction switch to the neutral position.

– Apply the parking brake.

– Switch off the truck.

– Disconnect the battery male connector.

– Check the pulling and braking forces of the towing vehicle.

– With the help of a guide, move the towing vehicle to the truck.

– Secure the tow bar to the tow coupling on the towing vehicle and the truck.

- Sit in the driver's seat in the truck being towed. Fasten the seat belt.
- Use the available restraint systems.
- Manually release the parking brake (refer to the previous section entitled "Emergency actuation of the parking brake".

The truck is now held in place only by the braking force of the towing vehicle.

- Select a towing speed that allows the truck and towing vehicle to be effectively braked and controlled at all times.
- Tow the truck.

NOTE

*If the service brake is actuated very strongly, the parking brake may apply. In this case, manually release the parking brake.*

- Once the towing procedure is complete, allow the parking brake to apply by actuating the brake pedal.
- Make sure that the emergency actuation mechanism returns to the initial position or only one groove is visible.
- If the status of the emergency actuation mechanism is unclear, secure the truck after towing using wedges so that the truck cannot roll away.
- Remove the tow bar.

# Charging quick access

## Charging quick access in the counterweight (variant)

The charging quick access (variant) is an additional charger socket behind a lid in the counterweight. This charger socket enables charging of lead-acid batteries and lithium-ion batteries without having to open the battery door. Charging is no faster with this charge access than with conventional charging via the plug connection on the battery.

**NOTE**

*The charging quick access is designed for either a lithium-ion battery or a lead-acid battery and is restricted to the respective variant by means of appropriate coding pins. The operating company must ensure that a charger suitable for the battery type is used. If the charging quick access must be converted to a different battery type, contact the authorised service centre.*

**NOTE**

*If lead-acid batteries must be charged via the charging quick access, an additional fan is required in the battery compartment. The authorised service centre can retrofit this fan. Contact the authorised service centre regarding this matter.*

Depending on the truck equipment, the following sections in the original operating instructions for the truck must be observed:

- "Charging the lead-acid battery" in the chapter entitled "Handling the lead-acid battery" or
- "Charging the lithium-ion battery" in the chapter entitled "Handling the lithium-ion battery" or
- "Handling the gel battery"

– Observe and follow the following safety information.

## Safety information

**⚠ DANGER**

**Risk of explosion due to flammable gases!**

During charging, the lead-acid batteries release a mixture of oxygen and hydrogen (oxyhydrogen gas). This gas mixture is explosive and must not be ignited.

There must be no flammable materials or spark-forming operating materials within 2 m of either the truck when it is parked for charging or the battery charger.

– When working with batteries, take the following safety precautions.

– Keep away from open flames and do not smoke.
– Ensure that work areas are adequately ventilated.
– Disconnect the battery male connector before charging and only when the truck and battery charger are switched off.
– Expose the surfaces of the battery cells.
– Do not place any metal objects on the battery.
– Fully open any protective structures (e.g. fabric-covered cab).
– Have fire extinguishing equipment ready.

**⚠ DANGER**

**Risk of fire due to overheated connection assemblies!**

Plugs that are not fully plugged in can produce excessive heat. They pose a fire hazard.

– Always fully plug the mains plug and the truck plug for the charging cable into the relevant socket.

**⚠ DANGER**

**Risk of fire due to overheated connection assembly!**

Do not pull out the mains plug under load as this will result in excessive wear and pose a fire hazard.

– If the mains plug needs be pulled out before the end of the charging process, cancel the charging process at the battery charger first.

**⚠ DANGER**

**Risk of explosion from connecting and disconnecting connection assemblies!**

Even if the truck and the battery charger are switched off, disconnecting or plugging in connection assemblies can cause the oxyhydrogen gas in the vicinity to explode.

– Ventilate the charging area sufficiently.

**⚠ CAUTION**

Explosive gas concentration in the battery compartment when charging lead-acid batteries.

When charging lead-acid batteries with the charging quick access, the battery compartment must **always** have an additional fan.

– If there is no fan, it is mandatory to retrofit a fan.

– Contact the authorised service centre regarding this matter.

**⚠ CAUTION**

Component damage due to excessive charging currents.

If the truck is equipped with charging quick access and external battery chargers are used, defined charging currents must **not** be exceeded:

300 A for lead-acid batteries

375 A for lithium-ion batteries

– Limit the charging current according to the installed battery.

**⚠ CAUTION**

Possible component damage.

Make sure that the charging cable does not cross any traffic routes. Do not route the charging cable over sharp edges.

**⚠ CAUTION**

Risk of damage to components due to water ingress!

- When cleaning the truck, make sure that the charge access does not come into contact with water!
- If a high-pressure cleaner is used, do not direct the water jet at the charge access!

## General

**NOTE**

*To ensure maximum battery life, always charge lead-acid batteries fully. Observe the maximum charging current limitation for external battery chargers for charging quick access. For intermediate charging during work breaks, use an air agitation pump (variant). Lithium-ion batteries may be charged intermediately as often as required with no restriction to the battery life.*

- Park the truck securely on a flat surface near the battery charger.

Four operating situations are possible for charging with charging quick access:

1 Lead-acid battery with truck switched off
2 Lead-acid battery with truck switched on
3 Lithium-ion battery with truck switched off
4 Lithium-ion battery with truck switched on

## Opening the lid

- Gently press in the lid (2) and release it.

The lid (2) is partially opened by a spring.

- Then open the lid (2) completely by hand and hold it.

The lid (2) is secured against unintentional opening by a spring.

## Closing the lid

When the charging cable is disconnected from the charging quick access (1), the lid (2) closes automatically by spring pull.

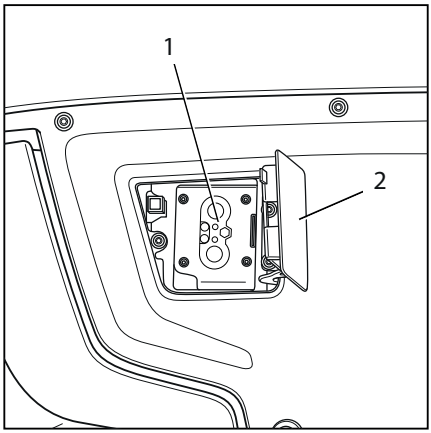

NOTE

*The lid is monitored by a sensor. If the lid is not completely closed, the truck cannot be switched on again.*

### 1. Lead-acid battery with truck switched off

– Connect the charging cable to the charging quick access (1).

Battery charging takes place. The display-operating unit shows nothing.

– When the charging process is complete, disconnect the charging cable from the charging quick access (1).

– Close the lid (2).

### 2. Lead-acid battery with truck switched on

The parking brake is applied automatically or a message appears in the display of the display-operating unit prompting the driver to apply the parking brake.

– Connect the charging cable to the charging quick access (1).

The truck goes into the charging state. The drives are de-energised.

Battery charging takes place. The screen on the display-operating unit goes dark.

– When the charging process is complete, disconnect the charging cable from the charging quick access (1).

– Close the lid (2). The truck will be ready for use again as soon as the lid is properly closed.

### 3. Lithium-ion battery with truck switched off

– Connect the charging cable to the charging quick access (1).

Battery charging takes place. The display-operating unit shows the charging state display (3); see the section entitled "Charging

state display on the display-operating unit for lithium-ion batteries".

– When the charging process is complete, disconnect the charging cable from the charging quick access (1).

– Close the lid (2).

## 4. Lithium-ion battery with truck switched on

The parking brake is applied automatically or a message appears in the display of the display-operating unit prompting the driver to apply the parking brake.

– Connect the charging cable to the charging quick access (1).

The truck goes into the charging state. The drives are de-energised.

Battery charging takes place. The display-operating unit shows the charging state display (3); see the section entitled "Charging state display on the display-operating unit for lithium-ion batteries".

– When the charging process is complete, disconnect the charging cable from the charging quick access (1).

– Close the lid (2). The truck will be ready for use again as soon as the lid is properly closed.

## Charging state display on the display-operating unit for lithium-ion batteries

When charging lithium-ion batteries, the charging state display (3) appears in the display-operating unit.

If the charging state display (3) does not appear, there is an error. The charging quick access (1) may not recognise the charging cable.

– In this case, disconnect the charging cable from the charging quick access and re-establish the connection.

If the charging process is running, the charging state display (3) is animated in green.

If the charging process is not running, the charging state display (3) flashes in grey.

▷

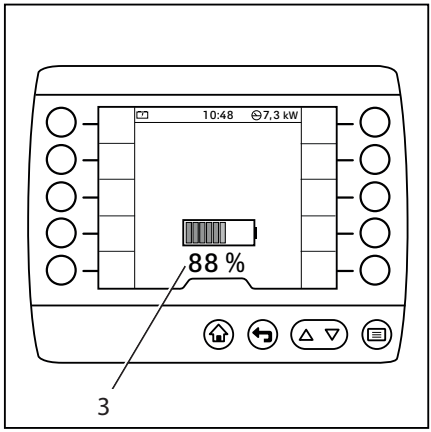


## Message when the fan is faulty

If the fan in the battery compartment is faulty, the following message appears on the display of the display operating unit:

`Fault: Internal charger`

In this case, do not charge lead-acid batteries via the charging quick access.

– Contact the authorised service centre.

## Additional labelling

Warning sign for component damage due to water ingress ▷

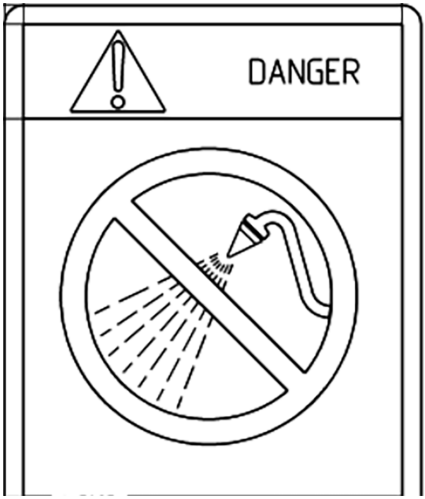

# Connecting and disconnecting the battery male connector

## Connecting the battery male connector

– Open the battery door.

**⚠ CAUTION**

Risk of component damage!

If the battery male connector is connected when the key switch is switched on (under load), a jump spark will be produced. This can lead to erosion at the contacts, which considerably shortens the service life of the contacts.

– Do not connect the battery male connectors with the key switch switched on.
– Make sure that the key switch is switched off before connecting the battery male connector.

– Ensure that the battery male connector (2) and the plug connection (1) are dry, clean and free of foreign objects.
– Insert the battery male connector (2) fully into the plug connection (1) on the truck.

The orange latch (3) must engage.

**⚠ CAUTION**

There is a risk of short circuit if the cables are damaged.

Do not crush the battery cable when closing the battery door.

– Ensure that the battery cable does not come into contact with the battery door.

**NOTE**

*The appearance of a lithium-ion battery differs from this illustration. The battery male connector also features additional contacts for communication between the battery and the truck control unit. However, the connection procedure is the same.*

– Close the battery door.

▷

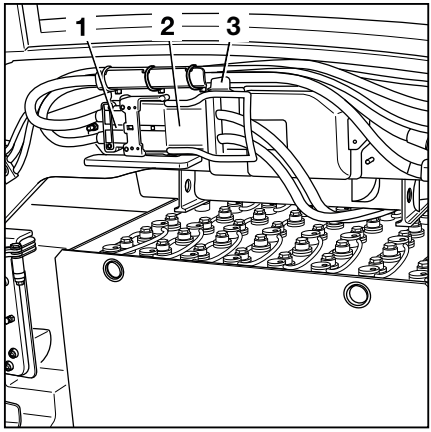


Illustration of a lead-acid battery

## Disconnect the battery male connector

– Open the battery door.

**⚠ CAUTION**

Risk of component damage!

If you disconnect the battery male connector while the key switch is switched on (under load), an arc will be produced. This can lead to erosion at the contacts, which considerably shortens the service life of the contacts.

– Do not disconnect the battery male connector with the key switch switched on.
– Make sure that the key switch is switched off before disconnecting the battery male connector.

– Press the orange latch (3).

The battery male connector (2) unlocks.

– Pull out the battery male connector (2) from the plug connection (1) on the truck and set it down safely.

**⚠ CAUTION**

There is a risk of short circuit if the cables are damaged.

Do not crush the battery cable when closing the battery door.

– Ensure that the battery cable does not come into contact with the battery door.

**NOTE**

*The appearance of a lithium-ion battery differs from this illustration. The battery male connector also features additional contacts for communication between the battery and the truck control unit. However, the disconnection procedure is the same.*

– Close the battery door.

▷

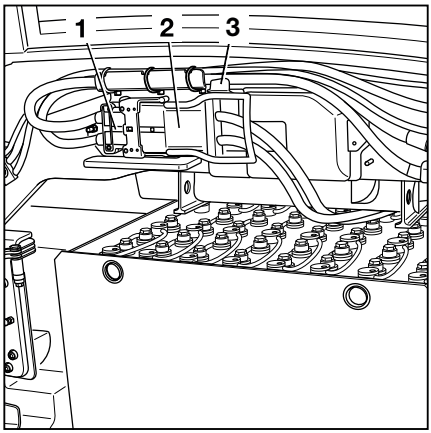


Illustration of a lead-acid battery

# On-board charger

## General information about the on-board charger (variant)

With an on-board charger (variant), there is no need to keep space for a battery charger on company premises.

This battery charger is suitable for operation using the public 400-V three-phase supply system with a CEE-16-A socket. The socket must meet the following requirements and undergo regular, professional testing:

- Fuse protection with 16 A (characteristic B, C, K or equal thereto)
- Fault-current circuit breaker for AC and DC fault currents (RCD-type B), 30 mA
- Protective conductor

NOTE

*All messages for the on-board charger are listed in the section entitled "Messages about operation" in the "Display messages" chapter.*

### Conditions for the operation of the on-board charger

The on-board charger must only be used to charge batteries that are located in the same truck as the charger and are connected to the truck.

The housing of the on-board charger must not be opened, as the high voltages inside pose a risk to life. Any breach shall invalidate the warranty. If multiple trucks with on-board chargers are being charged simultaneously, make sure that the electric installation is designed for this purpose and is adequately cooled.

### Charging cable

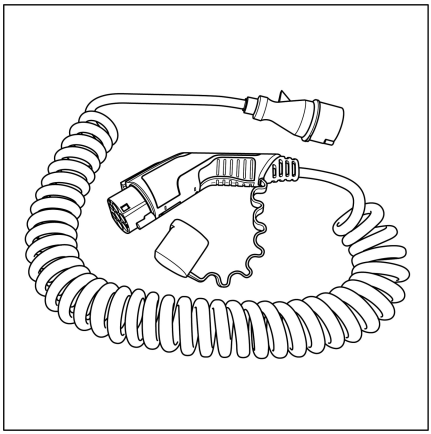

Use only the included charging cable as a connection between the on-board charger and the mains socket.

If the charging cable is used, observe the following:

– Route the charging cable without strong mechanical load, e.g. tension.

– Protect the charging cable from mechanical loads.

Do not allow the charging cable to cross traffic routes. Do not route the charging cable over sharp edges.

– Before you use the charging cable, check the plugs and the connection sockets for damage.

– If any damage is found, do not use the affected components (this applies to the charging cable and the charger socket).

## Changing the battery type used

**⚠ DANGER**

**Risk of fire and explosion!**

If the battery charger has not been configured for the battery type used and, for example, an excessively high battery capacity has been set, this may result in excessive heating and significant gas emissions. Oxyhydrogen gas and sulphur compounds form as a result.

– Observe the following conditions, which may mean that a reconfiguration of the battery charger is required.

The battery charger must be configured for the battery type used. When changing the battery type used, fleet manager access authorisation (variant) allows the fleet manager to reconfigure the battery charger if necessary.

**Reconfiguration not required:**

- Changing from a lead-acid battery to a STILL lithium-ion battery
- Changing from one STILL lithium-ion battery to another STILL lithium-ion battery

  The battery charger receives all necessary data directly from the lithium-ion battery.

**Reconfiguration required:**

- Changing from a STILL lithium-ion battery to a lead-acid battery
- Changing from a large lead-acid battery to a smaller lead-acid battery with a lower battery capacity or vice versa

– Refer to the section entitled "Changing to a different battery type" in the chapter entitled "Replacing and transporting the battery".

## Configuring the on-board charger

The on-board charger must be configured for the battery type used. Fleet manager access authorisation (variant) allows the fleet manager to do this.

**NOTE**

*The configuration process requires access authorisation for the fleet manager. Access to the settings menu is only available if the truck is at a standstill and the parking brake is applied. If the parking brake is released prematurely, the settings menu will close.*

– Apply the parking brake.

– Press the button.

– Activate the "Access authorisation for the fleet manager".

– Press the softkey.

– Press the `Truck settings` softkey.

– Press the `On-board charger` softkey.

`On-board charger` menu ▷

The following functions can be configured or switched on:

- `Charging characteristic curve`
- `Charging start time`
- `Charging current limitation`
- `Maintenance charge`

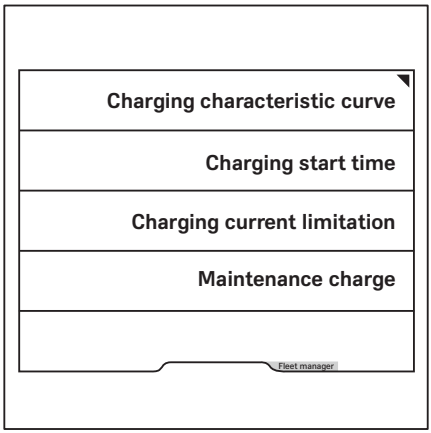


## Charging characteristic curve

– Push the `Charging characteristic curve` softkey.

The possible charging characteristic curves are displayed. ▷

The orange activation bar displays the current selection.

– Push the softkey that corresponds to the selection.

The display reverts to the `On-board charger` menu.

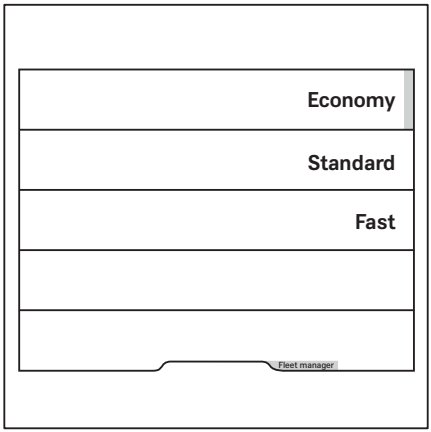


## Charging start time

– Press the `Charging start time` softkey.

`Charging start time` menu

- Enter the charging start time using soft-keys `0` to`9`.
- To `save`, press the button.
- To activate the charging start time, press the scroll button ▽.

The display reverts to the `On-board charger` menu.

If a charging start time has been defined, an orange activation bar lights up next to the `Charging start time` softkey.

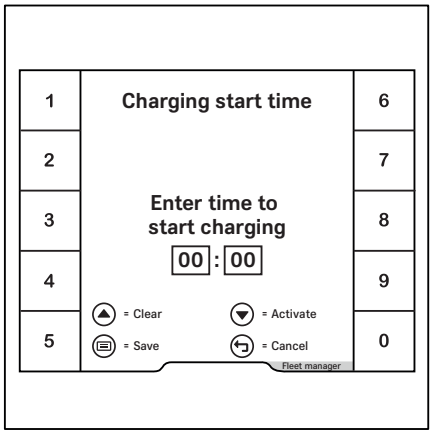


If the charging plug is plugged in outside the specified charging start time, a charging state indicator (2) appears in grey. Battery charging does not take place.

The time remaining (1) until the specified charging start time is displayed in the top-left. The softkey allows you to start charging directly.

- To do so, press the (3) softkey.

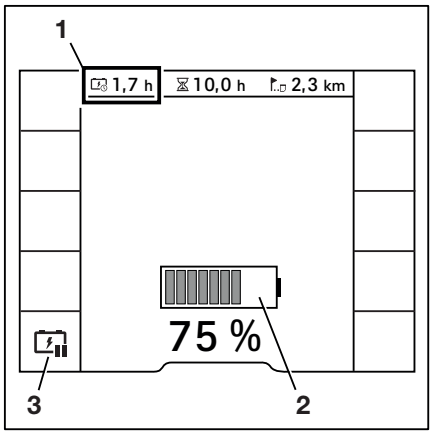

The symbol changes to (3). The orange activation bar lights up next to the softkey.

The charging state indicator (2) is animated in green. Battery charging takes place.

The remaining charging time (1) is displayed in the top-left.

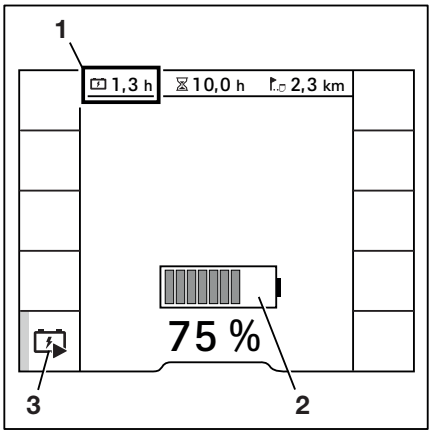


## Charging current limitation

Charging current limitation is required under the following conditions:

- Insufficiently powerful in-house network
- Power supply is provided via multiple-socket outlets

– Press the `Charging current limitation` softkey.

`Charging current limitation` menu

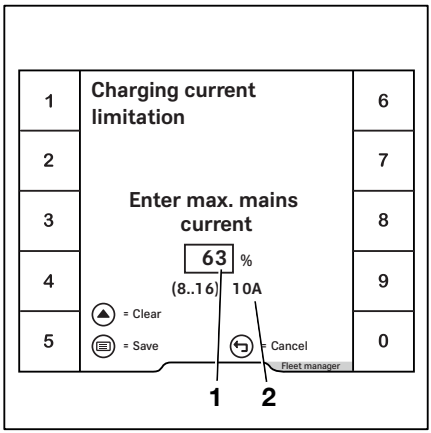


– Enter the charging current as a percentage (1) using softkeys `0` to `9`.

The charging current is displayed under the input window in amperes (2).

– To `save`, press the button.

The display reverts to the `On-board charger` menu.

## Maintenance charge

If the truck remains stationary over a prolonged period and maintenance charge is

active, the on-board charger checks the charging state of the battery from time to time and charges it if necessary.

– Press the `Maintenance charge` softkey.

If the maintenance charge is active, the orange activation bar lights up next to the softkey.

– To deactivate the maintenance charge, push the softkey again.

The orange activation bar goes out.

## Charging the battery

### Safety information

**⚠ DANGER**

**Risk of explosion due to flammable gases!**

During charging, the battery releases a mixture of oxygen and hydrogen (oxyhydrogen gas). This gas mixture is explosive and must not be ignited.

There must be no flammable materials or spark-forming operating materials within 2 m of either the truck when it is parked for charging or the battery charger.

– When working with batteries, take the following safety precautions.

– Keep away from open flames and do not smoke.

– Ensure that work areas are adequately ventilated.

– Disconnect the battery male connector before charging and only when the truck and battery charger are switched off.

– Expose the surfaces of the battery cells.

– Do not place any metal objects on the battery.

– Fully open any protective structures (e.g. fabric-covered cab).

– Have fire extinguishing equipment ready.

**⚠ DANGER**

**Risk of explosion due to static charge!**

If the driver is electrostatically charged, touching the battery may produce sparks. These sparks can ignite oxyhydrogen gas that has formed.

– To dissipate a possible electrostatic charge, touch an earthed component that is situated a long way from the battery.

**⚠ DANGER**

**Risk of fire due to overheated connection assemblies!**

Plugs that are not fully plugged in can produce excessive heat. They pose a fire hazard.

– Always fully plug the mains plug and the truck plug for the charging cable into the relevant socket.

**⚠ DANGER**

**Risk of fire due to overheated connection assembly!**

Do not pull out the mains plug under load as this will result in excessive wear and pose a fire hazard.

– If the mains plug needs be pulled out before the end of the charging process, cancel the charging process manually first (see the section entitled "Stopping the charging process manually")

**⚠ DANGER**

**Risk of explosion due to spark discharge!**

If the mains plug is plugged in, sparks may occur. These sparks can ignite any oxyhydrogen gas present in the battery compartment.

– Do not plug in the mains plug unless the battery compartment of the truck and the charging area have been sufficiently ventilated.

**⚠ DANGER**

**Risk of fire due to arcs!**

If the charging plug is disconnected during the charging process (under load), an arc will be produced. This can lead to erosion at the contacts, which considerably shortens the service life of the contacts and poses a fire hazard. The truck electronics can also be damaged by the excess voltage that arises.

– If the charging plug needs be pulled out before the end of the charging process, cancel the charging process manually first (see the section entitled "Stopping the charging process manually").

**⚠ DANGER**

**Risk of fire from connecting and disconnecting connection assemblies!**

Even when the truck and the battery charger are switched off, oxyhydrogen gas in the vicinity can explode if connection assemblies are connected or disconnected.

– Sufficiently ventilate the battery compartment of the truck and the charging area.

**⚠ CAUTION**

Possible component damage.

Make sure that the charging cable does not cross any traffic routes. Do not route the charging cable over sharp edges.

## Procedure

**NOTE**

*If a charging process has just been stopped manually via the charging button (see the chapter entitled "Stopping the charging process manually"), there is a delay of up to 60 seconds after plugging in the mains plug before a new charging process starts.*

NOTE

*To ensure maximum battery life, always charge lead-acid batteries fully. For intermediate charging during work breaks, use an electrolyte circulation pump (variant). Lithium-ion batteries may be charged intermediately as often as required with no restriction to the battery life.*

– Park the truck securely on a flat surface near a suitable CEE-16-A socket and switch off the truck.

– Take the supplied charging cable out of the storage container. ▷

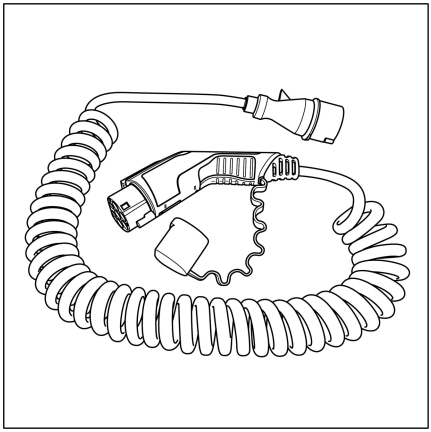

– Open the cover (2) of the charger socket (1) on the truck. ▷

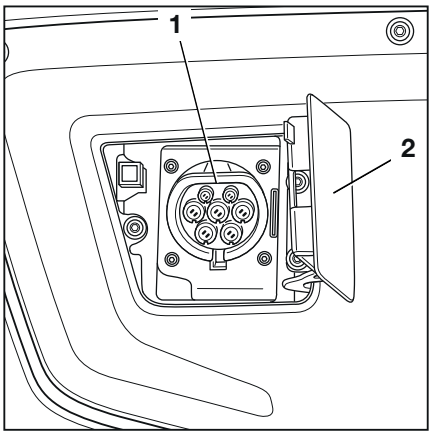

– Plug the truck plug (3) of the charging cable into the charger socket (1) on the truck.

– Make sure that the interlock (4) has closed correctly.

After a self-test, the battery charger automatically begins the charging process. The LED (5) pulses in yellow.

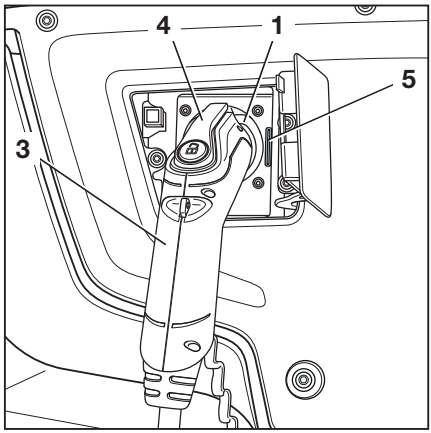


At the same time, the charging state display (6) appears on the display-operating unit.

If the charging state display (6) does not appear or the LED (5) lights up permanently in red, there is a fault. It is possible that the charger socket (1) does not recognise the truck plug (3).

– In this case, pull out the truck plug (3) and plug it in again.

If the charging process is running, the charging state display (6) is animated in green.

If the charging process is not running, the charging state display (6) flashes in grey.

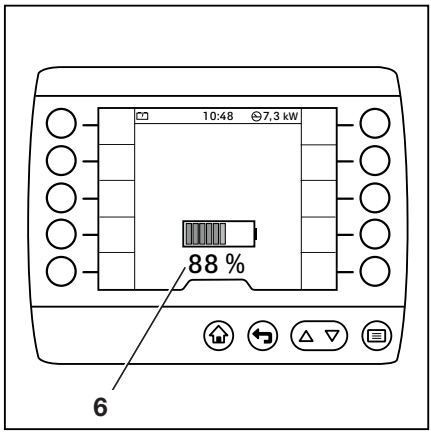

## Charging state display on the charger socket

The LED (5) on the charger socket uses differently coloured flash codes to indicate the current status of the charging process. Only the authorised service centre may rectify malfunctions.

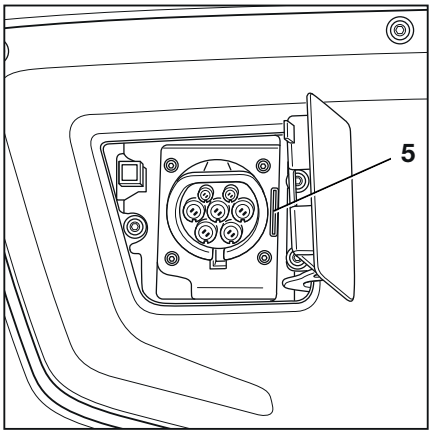


The following flash codes are possible:

| Status | Flash code |
|---|---|
| Main charging phase active | Yellow |
| Battery voltage detection/start phase | Yellow |
| Recharging phase active (lead-acid battery) | Yellow |
| Battery almost fully charged (lithium-ion battery): residual charging with reduced current | Yellow/ green |
| Battery fully charged | Green |
| Trickle charging (only for lead-acid batteries) | Green |
| Deep discharge start possible (press push button for 2 s) | Red |
| Malfunction (e.g. mains supply or battery faulty, internal fault): charging not possible | Red |

| Status | Flash code |
|---|---|
| Malfunction without shut-off: charging is continued at lower power | Yellow/red |
| Charging process was aborted or no system voltage present. | ○ |
| Overtemperature of the connected battery | Yellow/red |
| Wait for restart after power failure | - |
| Legend:<br>○ → LED off<br>● → LED on<br>◐ → LED flashing<br>◐ → LED pulsing<br>◐\|◐ → Pulsing alternately | |

## Reading the charging status from the tail lights

If desired, the charging process can also be indicated via a flashing signal emitted by the LED tail lights on the truck.

The individual LEDs in the tail lights begin to flash, go out and flash again, one after another, running from one side to the other side. This light signal is displayed over the entire duration of the charging process.

Up to a charging state of 50%, only the LEDs in the left tail light begin to flash. The fewer LEDs that flash, the lower the charging state.

As soon as the charging state exceeds 50%, the LEDs in the right tail light also begin to flash. The more LEDs that flash, the higher the charging state.

– Contact the authorised service centre on this matter.

## End of the charging process

When the battery is fully charged, the battery charger automatically stops the charging process. The charging state display (6) on the display-operating unit of the truck shows `100%`.

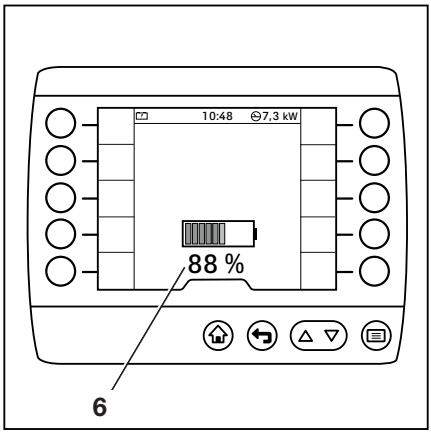


– To remove the charging cable, push and hold the charging button (7) on the truck plug.

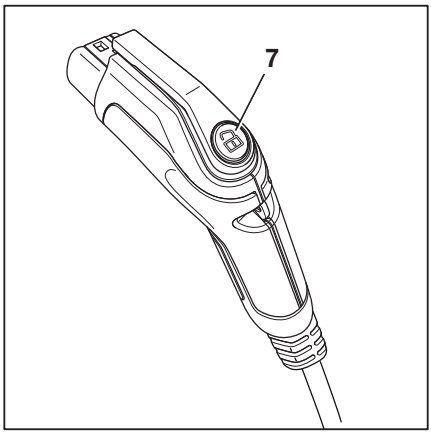


This opens the interlock for the truck plug at the same time.

– Pull the truck plug out of the charger socket.

– Pull the charging cable out of the CEE-16-A socket and attach the protective cap.

– Place the charging cable in the storage container on the counterweight.

– Close the cover of the charger socket.

It is possible to stop the charging process manually at any time. See the following section entitled "Stopping the charging process manually".

## Stopping the charging process manually

– Briefly press the charging button (7) on the truck plug. ▷

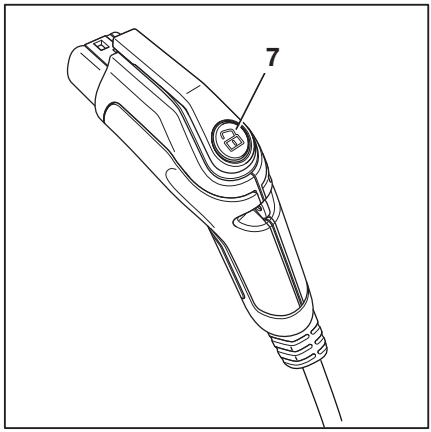


The charging status display on the display-operating unit goes out. The mains plug can now be disconnected.

– If the charging process needs to be started again, pull out the truck plug and plug it back in after approx. 2 seconds.

The charger starts a new charging process.

NOTE

*There may be a delay of up to 60 seconds before a new charging process starts.*

## Charging with an electrolyte circulation pump

As an option, the on-board charger can be equipped with an electrolyte circulation pump. To adjust the charging characteristic curve to the respective battery type, the authorised service centre must install this pump and configure this pump in the battery charger.

Using an electrolyte circulation pump reduces the charging time of a lead-acid battery and enables intermediate charging.

If the truck is equipped with an electrolyte circulation pump, a battery designed for electrolyte circulation must always be used. The pump can be damaged without the counter-pressure from the battery. The charger detects an error as soon as the pressure drops during the pumping process.

If a defect in the electrolyte circulation pump or the air duct is detected, the battery charger continues charging with a standard charging program without the electrolyte circulation pump. The LED on the charger socket flashes yellow/red. This indicates a fault.

NOTE

*To mix the electrolyte in the battery, the electrolyte circulation pump is switched on only periodically.*

## Cleaning

Check the on-board charger on a regular basis for contamination, particularly in the area of the fans.

If significant contamination has accumulated on the battery charger, cooling may be impaired. The isolation to the truck chassis may also be compromised.

– Remove contamination with a damp cloth. For significant contamination, use a soft brush or a soft paintbrush.

## Charging a deeply discharged lead-acid battery

NOTE

*A defective battery may be incorrectly identified as a deeply discharged battery if, for example, a cell short circuit or another fault is present. If the charging process is started in this case, the remaining cells of the battery may be overloaded. Before the charging process is started manually, you must therefore measure all cell voltages in the battery and compare them for any irregularities. If one cell voltage is significantly smaller than the others, the battery is probably defective. The charging process must not be started. In addition, the filling quantity of the acid in the cells must be checked and, if necessary, refilled according to the manufacturer's instructions. For this reason, the authorised service centre must always be notified if a battery is deeply discharged.*

If the connected battery has a cell voltage in the range of 1.0 to 1.6 V, it is considered to be deeply discharged.

The battery charger indicates this by means of a flashing red display after the mains plug has been plugged in. The charging process does not start automatically.

– To start the charging process, push and hold the charging button (7) on the truck plug for 2 seconds.

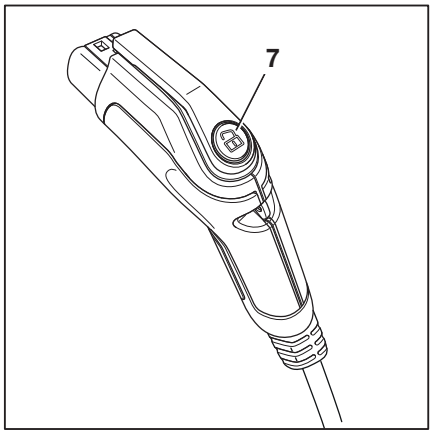


To charge the battery carefully, the battery charger starts a special charging characteristic curve. A full charge in this condition takes longer than a normal charging process. The driver must monitor the charging process at regular intervals (at least every 30 minutes). If the battery heats up to an excessive degree or emits a lot of gas (strong sulphur smell), the driver must cancel the charging process immediately. In this case, the battery is probably defective.

## Compatible batteries

**⚠ DANGER**

**Risk of fire and explosion!**

If an unapproved or defective battery is used, this can cause overloading as well as excessive gas emissions and overheating of the battery.

– Only use intact batteries approved by STILL.

**⚠ CAUTION**

Risk of damage to components.

If batteries other than those listed here are used, it is not possible to guarantee that the batteries will not incur damage and will charge correctly.

– Use only the batteries listed here.

In addition to proprietary STILL lithium-ion batteries, only the following batteries may be used:

| Manufacturer | Designation | Capacity[1)] |
|---|---|---|
| All[2)] | PzS, TCSM wet battery | < 1200 Ah (80 V) |
| Exide | TCSM gel battery | < 1000 Ah (80 V) |
| Exide | Sonnenschein PzV (gel)[3)] | < 1000 Ah (80 V) |
| Hawker | Evolution PzV (gel)[3)] | < 1000 Ah (80 V) |

Only the batteries listed here have been tested.

[1)] In order to achieve the full life expectancy of the battery, it is recommended that a minimum charging current of 0.1 C (0.12 C

for gel batteries) is maintained. This produces the maximum battery capacity. If larger batteries than specified are charged, over the long term, the batteries can be damaged or may not fully charge. The values shown are for the maximum charging current of 170 A. If the maximum charging current is restricted to a lower value by the truck, correspondingly smaller values are produced.

2) The implemented charging characteristic curve is approved by the following battery manufacturers:

- Hoppeke
- Hawker
- MIDAC
- TAB
- Exide

3) Gel batteries are charged solely in accordance with the standard characteristic curve (IUIa).

– If in doubt, contact the authorised service centre.

## Performance data

### Input

| | |
|---|---|
| Mains voltage | 400 V AC |
| Network frequency | 45 to 65 Hz |
| Maximum power consumption | 10.7 kW |
| Maximum current draw | 15.5 A |

### Output

| | |
|---|---|
| Maximum output power | 10 kW |
| Maximum charging current | 120 A[1)] |
| Output voltage | 40...108 V DC |
| Nominal voltage | 80 V DC |
| 1) Depending on the configuration of the truck and the installation situation, the maximum output current can be limited by the software. | |

NOTE

*From an ambient temperature of 40°C, the on-board charger reduces the charging performance.*

# Handling the lead-acid battery

## Safety regulations for handling the battery

– National statutory provisions for the country of use must be followed when setting up and operating battery charging stations.

**⚠ CAUTION**

Possible damage to the battery charger!

Incorrect connection or incorrect operation of the charging station or the battery charger may result in damage to components.

– Follow the operating instructions for the charging station or battery charger and for the battery.

– Observe the following safety regulations when maintaining, charging and changing the battery.

### Maintenance personnel

Batteries must only be charged, maintained and replaced by properly trained personnel in accordance with the instructions compiled by the manufacturers of the battery, battery charger and industrial truck.

– The handling instructions for the battery and the operating instructions for the battery charger must be observed.

– Observe the following safety regulations when maintaining, charging and changing the battery.

**⚠ WARNING**

Risk of crushing/shearing!

The battery is very heavy. There is a risk of serious injury if any parts of the body are caught under the battery.

There is a risk of injury if any parts of the body are wedged between the battery door and the edge of the chassis when the battery door is closed.

– Always wear safety shoes when replacing the battery.
– Only close the battery door if there are no parts of your body between the battery door and the edge of the chassis.

The battery must only be replaced in accordance with the directions in these operating instructions.

– When charging and maintaining the battery, observe the manufacturer's maintenance instructions for the battery and the battery charger.

## Fire protection measures

**⚠ DANGER**

**Risk of explosion if the battery is not extended!**

If the truck is equipped with an electric battery carrier (variant), the following applies:

The battery carrier reduces the space between the battery and the battery hood. During charging, lead-acid batteries generate explosive oxyhydrogen gas. Sufficient quantities of this gas must be removed from the truck. This gas can only be removed if the battery is fully extended for the entire charging process. Charging a lead-acid battery within the truck is not permitted.

– Fully extend the battery when charging.

**⚠ DANGER**

**Risk of explosion due to flammable gases!**

During charging, the battery releases a mixture of oxygen and hydrogen (oxyhydrogen gas). This gas mixture is explosive and must not be ignited.

There must be no flammable materials or spark-forming operating materials within 2 m of the battery charger and the industrial truck when it is parked for charging.

– Take the following safety precautions when working with batteries.

– Keep away from open flames and do not smoke.
– Ensure that work areas are adequately ventilated.
– Disconnect the battery male connector before charging and only disconnect when the industrial truck and battery charger are switched off.
– The battery door must remain open during charging.
– Expose the surfaces of the battery cells.
– Do not place any metal objects on the battery.
– Fully open any protective structures (e.g. fabric-covered cab).
– Have fire extinguishing equipment ready.

## Battery weight and dimensions

**⚠ DANGER**

**Risk of tipping due to change in battery weight!**

The battery weight and dimensions affect the stability of the industrial truck. The weight ratios must not be changed when replacing the battery. The battery weight must remain within the weight range specified on the nameplate.

– Do not remove or change the position of ballast weights.
– Note the battery weight.

## Performing battery maintenance

The cell covers of the battery must be kept dry and clean.

Terminals and cable shoes must be clean, lightly coated with battery grease and screwed on tightly.

– Neutralise any spilt battery acid immediately.

– Observe the safety regulations for handling battery acid; see the chapter entitled "Battery acid".

## Damage to cables and battery male connectors

**⚠ CAUTION**

There is a risk of short circuit if the cables are damaged.

Do not crush the battery cable when closing the battery door.

– Check the battery cable for damage.

– When removing and reinstalling the battery, ensure that the battery cables are not damaged.

– Ensure that the battery cable does not come into contact with the battery door.

**⚠ CAUTION**

Potential for damage to the battery male connector!

If the battery male connector is disconnected or connected while the key switch is switched on or while the battery charger is under load, an arc or a transition spark will be produced at the battery male connector. This can lead to erosion at the contacts and can considerably shorten the service life of the contacts.

– Switch off the key switch or the battery charger before the battery male connector is disconnected or connected.

– Do not disconnect the battery male connector while under load, except in an emergency.

## Ventilation gap

The ventilation gaps between the battery cover and the chassis are used for forced-air cooling of the battery compartment.

– Do not block the ventilation gaps.
– If the battery cover is deformed, contact the authorised service centre.

## Maintaining the battery

**⚠ DANGER**

**Danger to life and limb!**

– Observe the instructions in the chapter entitled "Safety regulations when handling the battery".

**⚠ WARNING**

Battery acid is toxic and corrosive!

– Observe the safety regulations in the chapter entitled "Battery acid".

**NOTE**

*Battery maintenance is carried out in accordance with the battery manufacturer's operating instructions. The operating instructions for the battery charger must also be observed. Only the instructions that came with the battery charger are valid. If any of these instructions are missing, request the relevant instructions from the dealer.*

Battery maintenance consists of the following steps:

- Checking the battery condition, acid level and acid density
- Checking the battery charge state
- Charging the lead-acid battery
- Equalising charging to preserve the battery capacity

## Checking the battery condition, acid level and acid density

**⚠ WARNING**

The electrolyte (diluted sulphuric acid) is poisonous and corrosive!

- Observe safety regulations for handling battery acid; see the chapter entitled "Battery acid".
- Wear personal protective equipment (rubber gloves, apron and protection goggles).
- Rinse away spilt battery acid immediately using plenty of water!

**⚠ CAUTION**

Risk of damage!

- Note the information in the operating instructions for the battery.

- Remove the battery from the truck.
- Inspect the battery for any cracks in the housing, raised plates and acid leaks.
- Have defective batteries repaired by the authorised service centre.
- Open the filler cap (1) and check the acid level. ▷

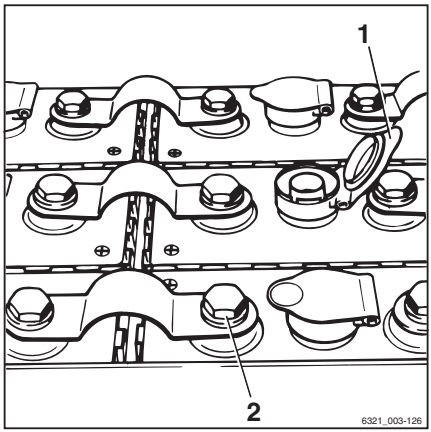


For batteries with "caged cell plugs", the liquid must reach the bottom of the cage.

For batteries without "caged cell plugs", the liquid must reach a height of approx. 10 to 15 mm above the lead plates.

- If the fluid level is too low, top up the fluid with distilled water only.
- Clean the battery cell covers and dry if necessary.
- Remove any oxidation residue on the battery terminals, then apply acid-free grease to the terminals.
- Tighten the battery-terminal clips (2) to a torque of 22–25 Nm (depending on the size of the terminal screws used).
- Check the acid density using an acidimeter.

After charging, the acid density must be between 1.28 and 1.33 kg/l.

For a discharged battery, the acid density must be **no lower** than 1.14 kg/l.

NOTE

*The required acid density after charging may vary depending on the manufacturer. Observe the operating instructions of the battery used. If you have any questions, contact your authorised service centre.*

## Checking the battery charging state and calibrating the battery charge indicator

CAUTION

Deep discharges shorten the service life of the battery.

Deep discharge begins when the battery charge display is red (3) (0% of the available battery capacity, i.e. approx. 20% of the nominal capacity).

- Deep discharge must be avoided (see the section entitled "Equalising charge to prevent a deep discharge of the battery").
- Stop working with the truck immediately.
- Charge the battery immediately.
- Do not leave batteries in a discharged or partly discharged state.

An important function of the battery charge indicator is to protect the battery from deep discharge. The battery discharge indicator shows the approximate battery charge status. The accuracy of the display increases as the battery continues to discharge.

- Apply the parking brake.
- Switch on the truck.
- Read the charging state on the display of the display-operating unit.
- Charge a discharged or partly discharged battery.

## Meaning of the colours in the display ▷

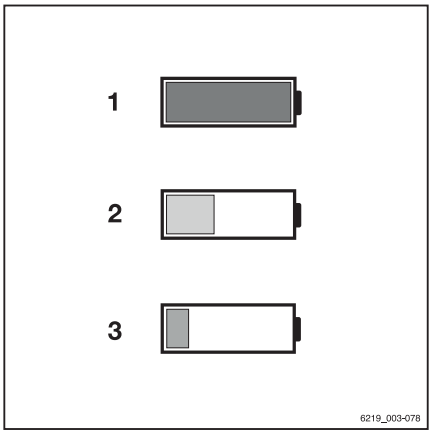


NOTE

*An abrupt change in the charging state display does not indicate a malfunction. The battery charge indicator allows the driver to detect any preliminary damage to the battery. If abrupt changes in the display begin to occur more frequently, have the battery and the charging process checked by the authorised service centre.*

1 Green:
The battery is sufficiently charged

2 Yellow:
Charge the battery soon.

3 Red:
Stop working. Charge the battery immediately. The battery is at risk of deep discharge.

The battery charge indicator has a protective function that prevents the displayed charging state from being affected. The charging state of a heavily discharged battery (residual charge < 30%) is not updated in the display until the battery charge indicator detects a fully charged battery.

– Never operate the batteries to the point of full discharge.

As soon as the battery charge indicator detects that the connected battery has been fully charged or a new battery has been connected, the display refreshes.

If the charging state drops to a significantly lower value immediately after the start of use, this indicates a battery problem or a charging error.

– Contact the authorised service centre if required.

## Calibrating the battery charge indicator

When the battery is replaced, the discharge of the newly inserted battery may be calculated and displayed incorrectly due to different ageing or discharge. This can even occur when the same battery types are used. Therefore, the Access authorisation for the fleet manager allows the battery charge indicator to be

calibrated to the newly inserted battery. The stored battery charge history is then deleted in the display-operating unit.

– Activate the "Access authorisation for the fleet manager".
– Press the button.
– Press the softkey.
– Press the `Truck settings` softkey. ▷

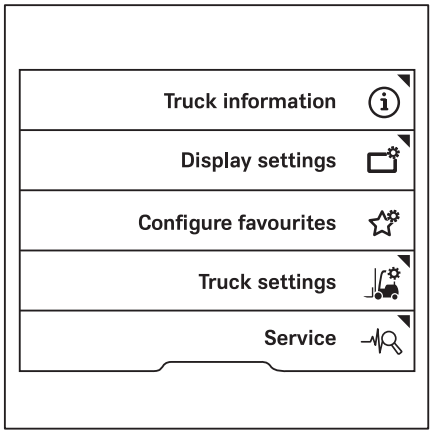


– Press the `Battery` softkey. ▷

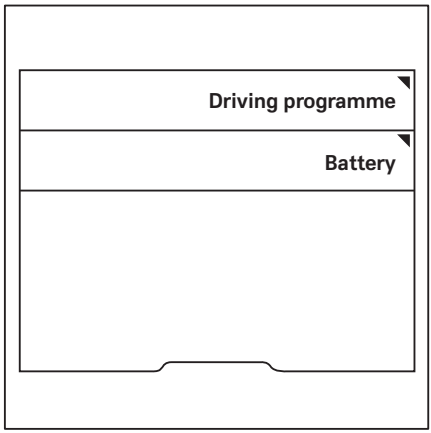

– Press the `Calibrate discharge indicator` softkey. ▷

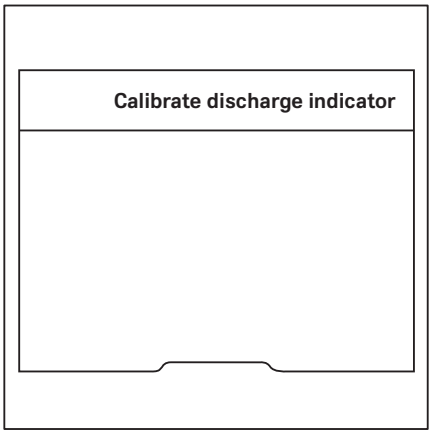


After the instruction has been executed, the message `Calibration successful` or `Calibration unsuccessful` is displayed.

– If the calibration failed, try again.

– If the calibration fails repeatedly, contact your authorised service centre.

## Charging the lead-acid battery

**⚠ DANGER**

**Explosive gases are generated during charging.**

The oxyhydrogen gas produced during charging is usually odourless. Older batteries may have a sulphurous odour due to contamination.

– Ensure that work areas are adequately ventilated.

– For trucks with a cab (including fabric-covered cabs), ensure adequate ventilation in the cab (variant).

**⚠ DANGER**

**Risk of explosion if the battery is not extended!**

If the truck is equipped with an electric battery carrier (variant), the following applies:

The battery carrier reduces the space between the battery and the battery hood. During charging, lead-acid batteries generate explosive oxyhydrogen gas. Sufficient quantities of this gas must be removed from the truck. This gas can only be removed if the battery is fully extended for the entire charging process. Charging a lead-acid battery within the truck is not permitted.

– Fully extend the battery when charging.

**⚠ DANGER**

**Risk of explosion due to old batteries!**

Old and inadequately maintained batteries can cause excessive gas emissions and excessive heating during charging.

The increased production of explosive gas can lead to an explosion.

- If an increased build-up of heat or a sulphurous odour is detected, stop the charging process immediately.
- Provide good ventilation.
- Inform the authorised service centre so that it can determine the condition of the battery.

**⚠ DANGER**

**There is a risk of damage, short circuit and explosion!**

- Do not place any metal objects or tools on the battery.
- Keep away from naked flames.
- Do not smoke.

**⚠ WARNING**

Battery acid is toxic and corrosive!

- Observe the safety regulations in the chapter entitled "Battery acid".

**⚠ CAUTION**

Risk of damage to the battery charger.

Incorrect connection or incorrect operation of the charging station or the battery charger may result in damage to components.

- Follow the operating instructions for the charging station or battery charger and for the battery.

**⚠ CAUTION**

Potential for damage to the battery male connector.

If the battery male connector is disconnected while the truck is switched on (under load), an arc will be produced. This can lead to erosion at the contacts, which considerably shortens the service life of the contacts.

– Switch off the truck before the battery male connector is disconnected.
– Do not disconnect the battery male connector while the truck is switched on, except in an emergency.

**⚠ CAUTION**

Risk of damage to components.

Damage and contamination of the battery male connector or the plug on the battery charger can lead to premature wear of the counterpart.

– Before each charging process, check both sides of the connection assembly between the battery charger and the battery for damage and contamination.
– Remove contamination immediately.
– Do **not** continue to use a damaged connection assembly. Arrange for the authorised service centre to repair the connection assembly.

**NOTE**

*STILL recommends that you always use components (plug and socket) from the same manufacturer for the connection assembly between the battery charger and the battery. The use of components from different manufacturers can cause increased wear due to the different tolerances in the shape and geometry of the components.*

– Park the truck securely.
– Ensure that work areas are adequately ventilated.
– Make sure that the external ventilation gaps on the truck are unobstructed and are not blocked.
– Fully open any protective structures (e.g. fabric-covered cab).
– Open the battery door completely.
– If the truck is equipped with an electric battery carrier (variant), fully extend the battery

out of the truck. See the section entitled "Replacing the battery using an electric battery carrier (variant)" in this chapter.

- Disconnect the battery male connector.
- Do not place any metal objects or tools on the battery.
- Keep away from naked flames. Do not smoke.
- Check the battery cables for damage.
  If necessary, have the battery cables replaced by the authorised service centre.
- Connect the battery male connector to the plug on the battery charger.
- Adjust the settings of the battery charger to the battery capacity of the lead-acid battery.
- Start the battery charger.

**NOTE**

*Observe the information in the operating instructions for the battery and the battery charger.*

**DANGER**

**Risk of explosion!**

To ensure adequate ventilation, the battery door must be locked in the charging position using the support bracket during the charging process.

The battery door can be locked in the open position using a support bracket.

– Pull the support bracket (1) upwards. Remove the support bracket from its support mounting (2) on the battery door.

– Swivel the support bracket (1) outwards in a clockwise direction.

– Clip the support bracket (1) into the support eyelet (3) on the truck.

The battery door will lock into a slightly open position.

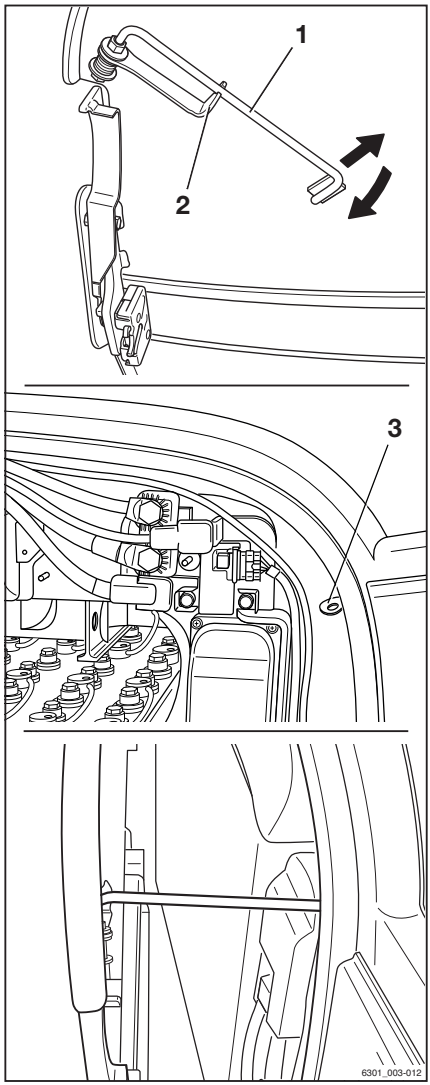


## After charging

**⚠ CAUTION**

Risk of damage to components!

– Switch off the battery charger before you disconnect the charging cable.

– Switch off the battery charger.

– Swing the support bracket (1) back into position and lock it into the support mounting (2) on the battery door.

– Open the battery door. Lock the battery door in the open position.

– Disconnect the battery male connector from the plug on the battery charger.

– Connect the battery male connector to the truck.

**⚠ DANGER**

**Risk of explosion!**

Only disconnect the connection assemblies when the truck and battery charger are switched off.

**⚠ CAUTION**

There is a risk of short circuit if the cables are damaged.

Do not crush the battery cable when closing the battery door.

– Ensure that the battery cable does not come into contact with the battery door.

– Close the battery door. When doing so, ensure that no cables are crushed between the chassis and the battery door.

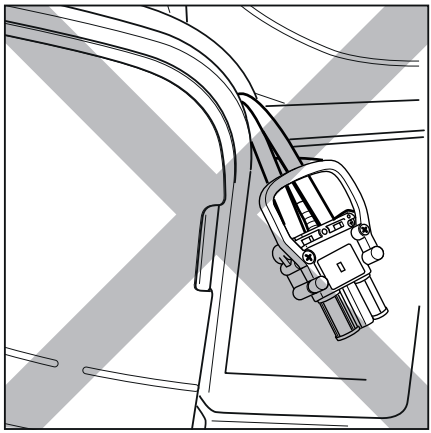

The battery door must be locked in place.

The truck is equipped with a door contact switch for the battery door. If the battery door is not fully closed, the message `Close battery door` appears on the display of the display-operating unit. The truck will not move.

## Equalising charging to preserve the battery capacity

Equalising charges ensure that unevenly charged battery cells are evenly charged again. This preserves the service life of the battery and the battery capacity.

An equalising charge should be carried out in accordance with the battery manufacturer's instructions several times a month after the normal charging process.

**NOTE**

*Depending on the battery charger used, the equalising charge may not begin until 24 hours have elapsed. A period when no shifts are running, such as the weekend, is therefore ideal for performing the equalising charge.*

– Observe the information in the operating instructions of the battery charger regarding how to perform an equalising charge.

### Starting the equalising charge

– Charge the battery.

– After charging, leave the battery in the charger.

The battery charger remains switched on. Depending on the type of battery charger,

the equalising charge begins between 6 and 24 hours after the end of the actual charging process. The equalising charge takes up to 2 hours.

– Please refer to the operating instructions from the manufacturer of the battery charger.

### Ending the equalising charge

The equalising charge ends automatically. If the battery is required during this process, you can interrupt the equalising charge by pushing the "stop button" on the battery charger.

– Please refer to the operating instructions from the manufacturer of the battery charger.

**⚠ CAUTION**

Damage to the connection assembly is possible!

If you disconnect the charging cable while the battery charger is switched on, an arc will be produced. This can lead to erosion at the contacts, which considerably shortens the service life of the contacts.

– Switch off the battery charger before you disconnect the charging cable.

– Switch off the battery charger.

– Disconnect the battery male connector from the plug for the battery charger.

– Insert the battery male connector fully into the plug connection on the truck.

## Battery maintenance indicator for lead-acid batteries (variant)

If the truck is equipped with the battery maintenance indicator (variant), the acid level of the lead-acid battery is permanently monitored via sensors.

If the acid level is too low, the message `Checking the battery acid level` appears on the display of the display-operating unit. ▷

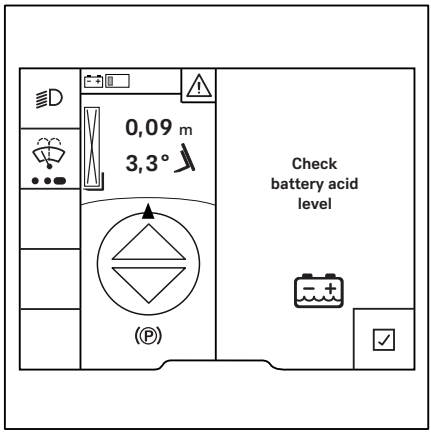


**⚠ CAUTION**

Risk of damage to the lead-acid battery!

If the acid level in one or more battery cells is too low, the lead-acid battery will become damaged and lose power.

– Do **not** continue to use the truck with this battery.

– Check the acid level and correct if necessary, see the section "Checking the condition, acid level and acid density of the battery" in the chapter "Handling the battery".

If a sensor fails, the message `Monitoring: Electrics` appears. ▷

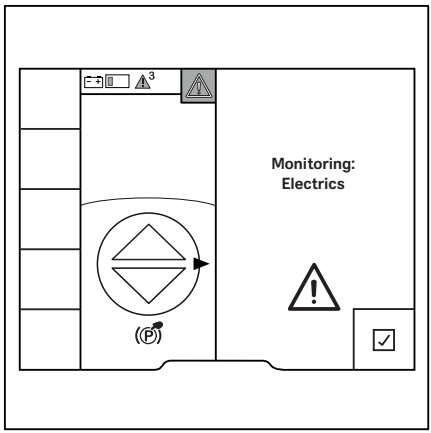


Do not continue to use the truck with this battery. The drive and hydraulic functions are deactivated.

– Park the truck securely.

– Have any defects rectified by the authorised service centre.

# Handling the gel battery

## General

In contrast to lead-acid batteries, gel batteries are largely maintenance-free. With gel batteries, there is no need to refill distilled water. The electrolyte is in gel form and, unlike conventional lead acid batteries, is non-liquid. For this reason, gel batteries also do not produce any oxyhydrogen gas during the charging process.

However, these benefits are at the expense of the amount of usable energy in the battery.

While a conventional lead-acid battery can use 80% of the energy contained in the battery, the gel battery uses only 60%. On the other hand, a gel battery is safe from deep discharge due to its design (according to DIN 43 539, Part 5).

## Identification

Gel batteries are marked with the abbreviation "PzV". It is located on the identification plate of the battery.

## Safety regulations for handling the battery

– If a charging station for gel batteries is set up, follow the national regulations of the country of use.

**⚠ CAUTION**

Risk of damage to the battery charger!

Components may be damaged if the battery charger is connected or operated incorrectly.

– Follow the operating instructions for the charging station or battery charger and for the battery.

## Requirements for the charger

A gel battery requires a high-frequency charger. This means that the gel battery cannot be charged with a charger for conventional lead-acid batteries. For this reason, the charging socket of the gel battery has a special green coding pin. This coding pin ensures that it is possible only for a charger for gel batteries to form a connection assembly.

**⚠ CAUTION**

Possible damage to the gel battery!

Gel batteries may be charged only with chargers that are approved for gel batteries. A different charger may damage or destroy the battery.

– Do **not** remove, replace or convert the coding pin in the battery charging socket.

– Use only chargers that are approved for gel batteries.

## Maintenance personnel

Only personnel trained for this purpose may:

- Charge the battery
- Replace the battery

This work must be carried out according to the instructions of the battery manufacturer and of the charger manufacturer.

– Observe the manufacturer's operating instructions for the battery and the charger.

– Observe the following safety information when replacing and charging the battery.

**⚠ WARNING**

Risk of crushing/shearing!

The battery is very heavy. There is a risk of serious injury if any parts of the body are caught under the battery.

There is a risk of injury if any parts of the body are wedged between the battery door and the edge of the chassis when the battery door is closed.

– Always wear safety shoes when replacing the battery.

– Only close the battery door if there are no parts of the body between the battery door and the edge of the chassis.

– The battery must only be replaced in accordance with the directions in these operating instructions.

– When charging and maintaining the battery, observe the manufacturer's operating instructions for the battery and the battery charger.

## Battery weight and dimensions

**⚠ DANGER**

**Risk of tipping due to change in battery weight**

The battery weight and dimensions affect the stability of the industrial truck. When replacing the battery, the weight ratios must not be changed. The battery weight must remain within the weight range specified on the nameplate.

– Do not remove or change the position of ballast weights.

– Note the battery weight.

## Damage to cables and battery male connector

**⚠ CAUTION**

There is a risk of short circuit if the cables are damaged.

Do not crush the battery cable when closing the battery door.

- Check the battery cable for damage.
- When removing and reinstalling the battery, ensure that the battery cables are not damaged.
- Ensure that the battery cable does not come into contact with the battery door.

**⚠ CAUTION**

Potential for damage to the battery male connector!

If the battery male connector is disconnected or connected while the key switch is switched on or while the battery charger is under load, an arc or a transition spark will be produced at the battery male connector. This can lead to erosion at the contacts and can considerably shorten the service life of the contacts.

- Switch off the key switch or the battery charger before the battery male connector is disconnected or connected.
- Do not disconnect the battery male connector while under load, except in an emergency.

## Charging the gel battery

The charging procedure is in principle the same as for a lead-acid battery. However, no protective measures are required for the escape of oxyhydrogen gas.

- Park the industrial truck securely.
- Open the battery door completely.
- Disconnect the battery male connector.
- Do not place any metal objects or tools on the battery.
- Check the battery cables for damage.
  If necessary, have the battery cables replaced by the authorised service centre.
- Connect the battery female connector to the plug on the battery charger.
- Adjust the settings of the battery charger to the battery capacity of the gel battery.

– Start the battery charger.

NOTE

*Observe the information in the operating instructions for the battery and the battery charger.*

## After charging

**CAUTION**

Risk of damage to components!

– Switch off the battery charger before you disconnect the charging cable.

– Switch off the battery charger.

– Disconnect the plug of the battery charger from the battery female connector.

– Connect the battery female connector to the industrial truck.

**CAUTION**

There is a risk of short circuit if the cables are damaged!

Do not crush the battery cable when closing the battery door.

– Ensure that the battery cable does not come into contact with the battery door.

– Close the battery door. When doing so, ensure that no cables are crushed between the chassis and the battery door.

The battery door must be locked in place.

The truck has a door contact switch for the battery door. If the battery door is not fully closed, the message Close battery door appears on the display of the display-operating unit. The industrial truck will not move.

# Handling the lithium-ion battery

## Safety regulations for handling the lithium-ion battery

### First-aid measures

**⚠ WARNING**

Risk of injury!

Escaping gases can lead to breathing difficulties.

#### Course of action required if gases or liquids escape

– Immediately ventilate the area or go out into the fresh air; in more serious cases, call a doctor immediately.

Skin irritation can occur in the event of contact with the skin.

– Thoroughly wash the skin with soap and water.

Eye irritation can occur in the event of contact with the eyes.

– Immediately rinse eyes thoroughly with water for 15 minutes, then consult a doctor.

### Maintenance personnel

The lithium-ion battery is virtually maintenance-free and can be charged by the driver.

– If you have any questions, please contact your authorised service centre.

– The handling instruction for the battery and the operating instructions for the battery charger must be followed.

– Observe the following safety regulations when maintaining, charging and changing the battery.

**⚠ WARNING**

Risk of crushing/shearing!

The battery is very heavy. There is a risk of serious injury if any parts of the body are caught under the battery.

If parts of the body are wedged between the battery door and the edge of the chassis when the battery door is closed, this could lead to injuries.

- Always wear safety shoes when replacing the battery.
- Only close the battery door if there is no part of the body between the battery door and the edge of the chassis.

The battery must only be replaced in accordance with the directions in these operating instructions.

- When charging and maintaining the battery, observe the manufacturer's maintenance instructions for the battery and battery charger.

## Fire protection measures

**⚠ DANGER**

**There is a risk of damage, short circuiting and explosion!**

- Do not place any metal objects or tools on the battery.
- Keep away from naked flames and do not smoke.

**⚠ DANGER**

**Increased risk of fire!**

Damaged lithium-ion batteries pose an increased fire hazard.

In the event of a fire, large quantities of water are the best option to cool the battery.

- Evacuate the location of the fire as quickly as possible.
- Ventilate the location of the fire well, as the resulting combustion gases are corrosive if inhaled.
- Inform the fire brigade that lithium-ion batteries are affected by the fire.

– Observe the information provided by the battery manufacturer regarding the procedure in the event of a fire.

## Battery weight and dimensions

**⚠ DANGER**

**Risk of tipping due to change in battery weight!**

The battery weight and dimensions affect the stability of the truck. When replacing the battery, the weight ratios must not be changed. The battery weight must remain within the weight range specified on the nameplate.

– Do not remove or change the position of ballast weights.

– Observe the battery weight.

## General safety regulations for lithium-ion batteries

The following safety regulations generally apply to operating lithium-ion batteries.

– Comply with the specifications stated in the safety data sheets of the battery manufacturer.

– Protect the battery against mechanical damage to prevent internal short circuits.

– If batteries have even the slightest external damage, dispose of them in accordance with national regulations for the country in which they are being used.

– Do not expose batteries directly to continuously high temperatures or heat sources, such as direct sunlight.

– Train employees in how to handle lithium-ion batteries correctly.

# Lithium-ion batteries "GGS Li-ion 80 V" 24.1 kWh and 60 kWh

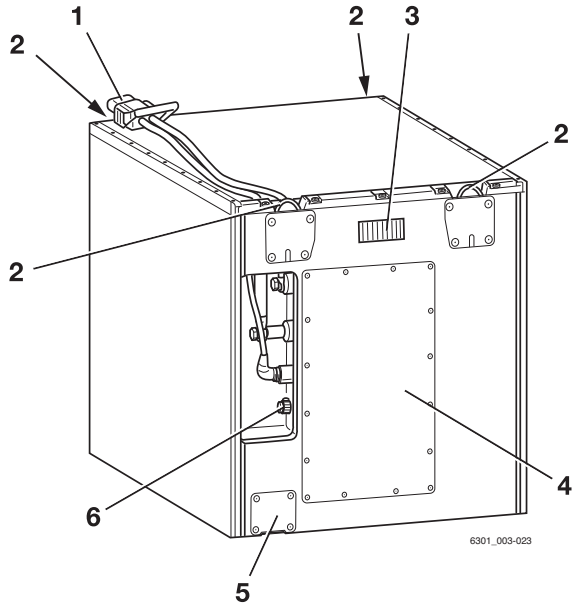


| | | | |
|---|---|---|---|
| 1 | Battery male connector | 4 | Technology compartment |
| 2 | Lifting eyes | 5 | Safety valve |
| 3 | Display | 6 | Diagnostic connector |

**⚠ WARNING**

Risk of accident due to weakened lifting eyes.

If bent lifting eyes are straightened, they lose their rigidity. The lifting eyes are then no longer able to support the weight of the battery. The battery may fall.

– **Do not** straighten bent lifting eyes.

– Have bent lifting eyes replaced by the authorised service centre.

**NOTE**

*When switching to lithium-ion batteries, have the truck electronics adapted by the authorised service centre.*

## Regulations for storing lithium-ion batteries

NOTE

*Lithium-ion batteries are classified as dangerous goods according to class 9.*

The following recommendations apply:

- Wherever possible, store batteries at ground level so that they cannot be damaged by falling
- Store the batteries in a segregated area suitable for fire protection (container or safety cabinet)
- Store the batteries at a temperature between +15°C and +30°C and air humidity from 0% to 80%

Observe the following regulations for safe storage of the batteries:

– Store batteries fixed onto pallets and secured against overturning.

– Observe the floor load capacity of the storage area; refer to the manufacturer's specifications regarding battery weight

– To protect batteries against moisture, do not store them directly on the floor

– Due to the fire risk, store batteries outside buildings

– Store in a cool, dry and well-ventilated area

– Never subject the battery to temperatures below -35°C and above 80°C.

Long-term storage below -10°C or above 50°C has a negative impact on the service life of the battery.

– After three months, check the charge state of the battery and recharge if necessary

– Cordon off the relevant area of the warehouse

– Only persons who are aware of the risks and safety regulations may access this area

– Protect against direct sunlight

– Protect against precipitation

- Store in a way that protects the batteries against short circuits
- Store batteries at a safe distance from flammable materials
- Do not store batteries together with metallic objects
- Store lithium-ion batteries separately from other types of batteries (no mixed storage)
- Maintain a safety margin of at least 2.5 m from other goods
- To avoid a deep discharge, observe the specifications of the battery manufacturer regarding the maximum permissible storage period
- If you have any questions, contact your authorised service centre.

# Checking the battery charge state

The charge state of the lithium-ion battery can be read on the display-operating unit of the truck and on the lithium-ion battery display.

## Reading on the display-operating unit ▷

– Apply the parking brake.

– Switch on the key switch.

– Read the charge state from the display.

– Charge a discharged or partly discharged battery.

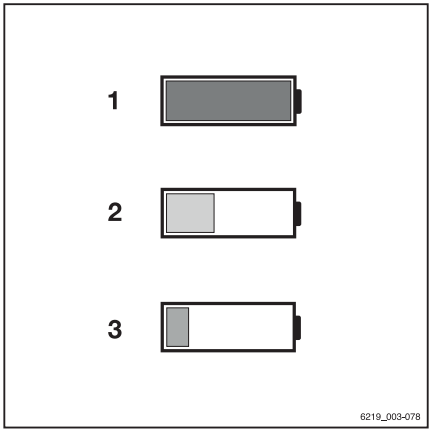


### Meaning of the colours in the display

1 Green:
The charge state is > 10%.
The battery is sufficiently charged

2 Yellow:
The charge state is ≤ 10%.
Charge the battery soon.

3 Red:
Stop working. Charge the battery immediately. The battery is at risk of deep discharge.

## Reading from the battery indicator ▷

The battery indicator is located on the side of the battery tray. Like the display-operating unit, the battery indicator shows the charge state of the lithium-ion battery. Warnings are issued only on this battery indicator.

– If you have any questions, contact your authorised service centre.

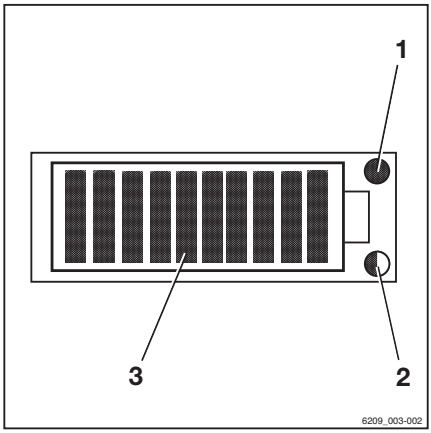


1 Service LED (red)
2 Temperature LED (yellow/red)
3 Charge state LEDs (red/green)

## Charge state LEDs

When the battery is connected to the truck and the truck is switched on, the charge state LEDs (3) display the charge state in 10% increments. The charge state LEDs can light up green and red.

- A charge state of 0% to 20% is indicated by a red bar.
  If this bar flashes, the charge state is < 2%.

The truck can no longer be moved.

- A charge state of > 20% to 30% is indicated by yellow bars.
- A charge state of > 30% to 100% is indicated by green bars

When charging, the charge state LEDs (3) light up green as a chase light.

## Service LED

The service LED (1) lights up red if the battery function is significantly restricted or if operation is not possible.

– Contact the authorised service centre.

## Temperature LED

The temperature LED (2) indicates an increased temperature. Battery power is reduced. The LED remains illuminated until the temperature falls to within the normal range. The LED goes out as soon as the temperature falls into the normal range.

| Colour of LED | Cause | Consequence |
|---|---|---|
| Flashing yellow | Slightly increased temperature (> 60°C) | Power reduction |
| Solid yellow | Increased temperature (> 65°C) | Shut-off |
| Flashing red | Greatly increased temperature (> 70°C) | Shut-off |
| Solid red | Greatly increased temperature (> 75°C) | Shut-off |

## Procedure if a lithium-ion battery has a low charge state

**⚠ WARNING**

Risk of component damage or destruction!

Deep discharge can permanently damage a lithium-ion battery or render the battery unusable.

– Always charge the battery in good time and do not allow the charge state to drop below 10%.

To prevent deep discharge of the lithium-ion battery, performance limitations are imposed once the charge state of the battery is ≤ 10%.

– If the charge state drops below 15%, drive to the charging station and charge the battery.

**⚠ WARNING**

There is no electric brake assistance when the battery is switched off!

The drives are de-energised when the battery is automatically switched off.

The truck will not be held by the regenerative brake if located on a slope.

– To brake, actuate the service brake.

– If the battery switches off, tow the truck to the charging station.

– Charge the battery.

## Charging the lithium-ion battery

**⚠ CAUTION**

Risk of damage to components.

Incorrect connection or incorrect operation of the charging station or battery charger may result in damage to components.

– Follow the operating instructions for the charging station or battery charger and for the battery.

**⚠ CAUTION**

Risk of damage to components.

Using battery male connectors and battery charger plugs from different manufacturers can result in damage. They are not designed to be used together.

– Use battery male connectors and battery charger plugs from the same manufacturer.

– If the connectors are from different manufacturers, please contact your authorised service centre.

**⚠ CAUTION**

Risk of damage to components.

Damage and contamination of the battery male connector or the plug on the battery charger can lead to premature wear of the counterpart.

- Before each charging process, check both sides of the connection assembly between the battery charger and the battery for damage and contamination.
- Remove contamination immediately.
- Do **not** continue to use a damaged connection assembly. Arrange for the authorised service centre to repair the connection assembly.

**NOTE**

*To prevent deep discharge of the lithium-ion battery, performance limitations are imposed once the charge state of the battery drops to a certain level. Charge the battery before the charge state drops below 15%.*

To read the battery charge state; see the section entitled "Checking the battery charge status".

- Park the truck securely.
- Open the battery door completely.
- Disconnect the battery male connector.
- Keep away from naked flames. Do not smoke.
- Check the battery cables for damage.
  If necessary, have the battery cables replaced by the authorised service centre.

**⚠ DANGER**

**There is a risk of damage, short circuit and explosion!**

- Do not place any metal objects or tools on the battery.
- Keep away from naked flames.
- Do not smoke.

- Connect the battery male connector to the plug on the battery charger.
- Start the battery charger.

The charging process starts automatically. The display signals the charging process by illuminating the LEDS as a chase light.

The battery charger will indicate when the battery is fully charged. Only disconnect the battery from the battery charger if no current is flowing.

The battery has no memory effect. Therefore, it can be charged in any charge state without the capacity of the battery being impaired.

At ambient temperatures below 0°C, the charging process will take much longer.

NOTE

*Observe the information in the operating instructions for the battery and the battery charger.*

The battery door can be locked in the open position using a support bracket. ▷

– Pull the support bracket (1) upwards. Remove the support bracket from its support mounting (2) on the battery door.

– Swivel the support bracket (1) outwards in a clockwise direction.

– Clip the support bracket (1) into the support eyelet (3) on the truck.

The battery door will lock into a slightly open position.

– To close the battery door, swing the support bracket (1) back into position. Lock the support bracket (1) into the support mounting (2) on the battery door.

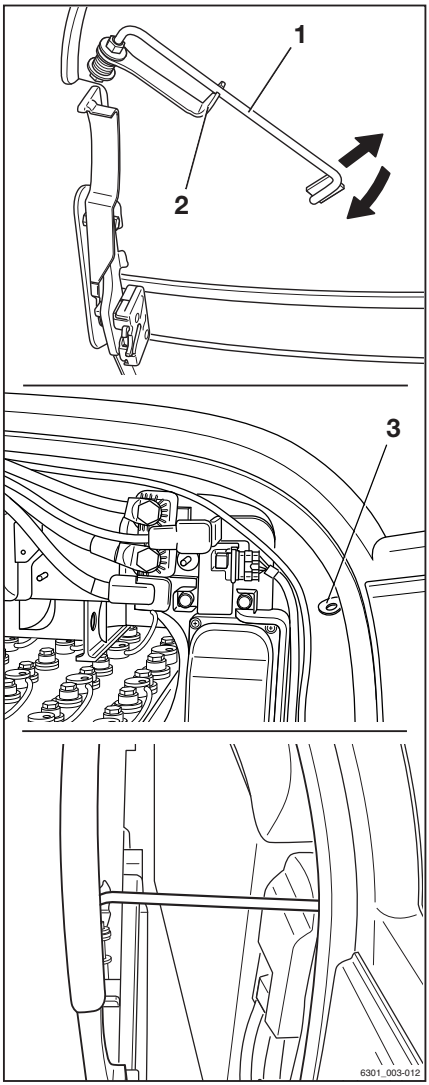


## After charging

The battery charger will switch off automatically.

– Open the battery door. Lock the battery door in the open position.

– Disconnect the battery male connector from the plug on the battery charger.

– Insert the battery male connector fully into the plug connection on the truck.

**⚠ CAUTION**

There is a risk of short circuit if the cables are damaged.

Do not crush the charging cable when closing the battery cover.

– Make sure that the charging cable does not come into contact with the battery cover.

– Close the battery door. When doing so, ensure that no cables are crushed between the chassis and the battery door.

The truck is equipped with a door contact switch for the battery door. If the battery door is not fully closed, the message `Close battery door` appears on the display of the display-operating unit. The truck will not move.

▷

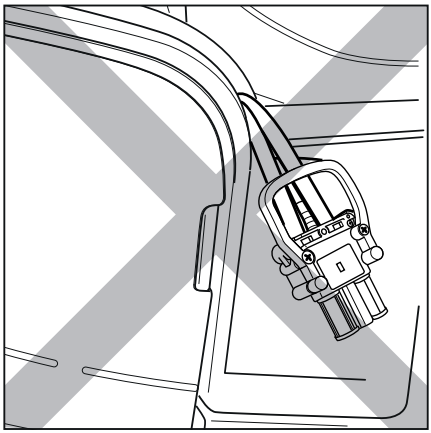

# Replacing and transporting the battery

## General information on replacing the battery

**⚠ CAUTION**

Risk of components being damaged by the lifting accessory and battery rolling away!

The lifting accessory and battery may roll away in an uncontrolled manner if the battery is not removed on a level, smooth floor with sufficient load-bearing capacity.

- Follow the operating instructions for the lifting accessories used.
- Always remove the battery on a level, smooth floor with sufficient load capacity.

Batteries can be removed with a truck and with a battery change frame.

The load capacity of the lifting accessory used must at least match the battery weight (see the battery nameplate).

## Wire cross-section of the battery cable on the "High Performance" variant

If the truck is fitted with the "High Performance" variant, the components have a higher current draw.

**⚠ CAUTION**

Risk of overheating of the battery cable.

Due to the higher current draw, the wire cross-section of the battery cable must be at least 70 $mm^2$.

- Ensure that all batteries in use have a battery cable with a wire cross-section of at least 70 $mm^2$.

**NOTE**

*If different batteries are used in alternating battery operation, always ensure that all batteries used have a battery cable with a wire cross-section of at least 70 $mm^2$.*

# Changing to a different battery type

The truck can be converted to a different battery type and capacity.

The new battery capacity and new battery type must be set in the display-operating unit.

- If this is not done, the actual battery discharge status cannot be determined. The battery charge level is not displayed correctly.
- In the worst case scenario, deep discharge can damage the battery.

Using his/her access authorisation, the fleet manager can set the new battery capacity and the new battery type in the display-operating unit.

– Use only lithium-ion batteries that have been approved by STILL for use with this truck.

## Setting the new battery capacity and the new battery type

– Stop the truck.

– Apply the parking brake.

– Press the button.

– Press the softkey.

The first menu level appears.

– Activate the "Access authorisation for the fleet manager".

– Press the `Truck settings` softkey .

– Press the `Battery` softkey.

– Press the `Battery type` softkey.

The battery types are listed.

– Select the battery type by pressing the appropriate softkey.

– Return to the `Battery` menu.

– Press the `Capacity` softkey.

– Use the softkeys to enter and confirm the battery capacity according to the battery nameplate.

– Switch the truck off and on again.

The changed settings will be active once the truck is switched on.

## Converting to lithium-ion batteries

If the truck is fitted with a lead-acid battery at the factory, the truck can be converted to a lithium-ion battery. The conversion must be performed by the authorised service centre.

The authorised service centre adapts the truck electrics so that they will work with the lithium-ion batteries.

This includes:

- The cable harness
- The battery male connector and the plug connection
- Adjusting the display-operating unit

– Use only lithium-ion batteries that have been approved by STILL for use with this truck.

## Opening and closing the battery door ▷

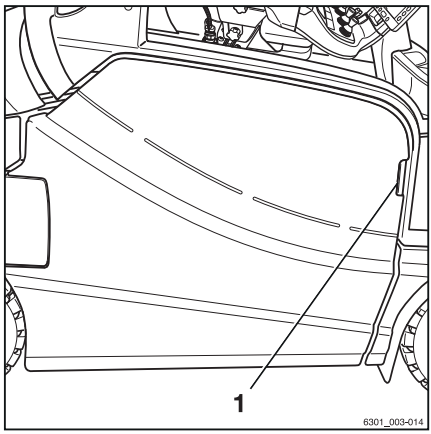


### Opening the battery door

– Grasp the door handle (1) on the battery door. Open the battery door by pulling it backwards.

The hinge of the battery door holds the battery door in the open position.

## Locking the battery door in a slightly open position

The battery door can be locked in the open position using a support bracket.

- Pull the support bracket (1) upwards. Remove the support bracket from its support mounting (2) on the battery door.
- Swivel the support bracket (1) outwards in a clockwise direction.
- Clip the support bracket (1) into the support eyelet (3) on the truck.
- To close the battery door, swing the support bracket (1) back into position. Lock the support bracket (1) into the support mounting (2) on the battery door.

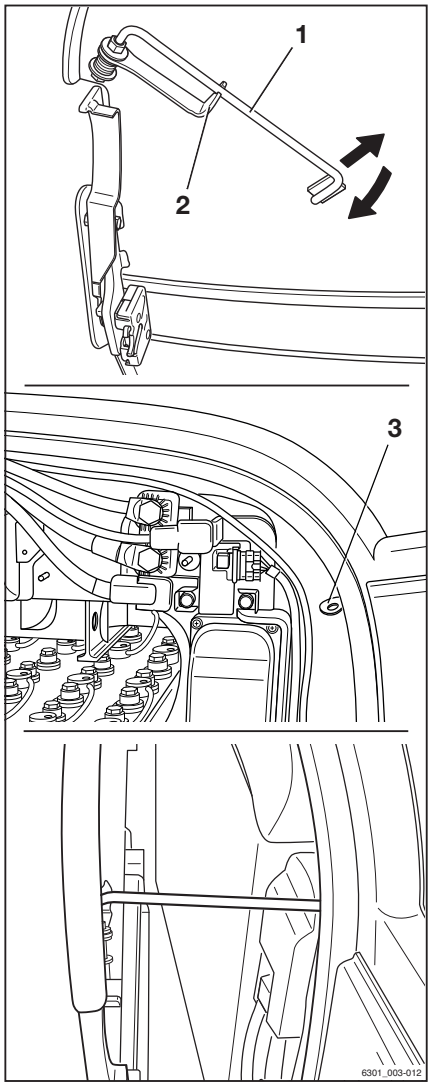


## Closing the battery door

**⚠ WARNING**

When closing the battery door, limbs could become trapped. There is a risk of crushing!

When closing the battery door, nothing should come between the battery door and the edge of the chassis.

- Carefully close the battery door.
- Only close the battery door if there are no parts of the body in the way.

**⚠ WARNING**

When closing the battery door, the battery cable could become trapped. There is risk of short circuit due to the battery cable being crushed or sheared off!

When closing the battery door, nothing should come between the battery door and the edge of the chassis.

- Carefully close the battery door.
- Only close the battery door if the battery cable is not in the way.

**⚠ WARNING**

Risk of accident due to the battery door opening!

An unlocked battery door may open if the truck decelerates sharply. If the battery door opens while driving, there is risk of damage from a collision.

– Ensure that the battery door is securely shut.
– Drive the truck only when the battery door is locked.

**⚠ DANGER**

**Risk of fatal injury from the battery sliding out!**

The battery may fall out if the battery door is not locked and the truck tips over. The battery could fall on the driver!

– Ensure that the battery door is securely shut.
– Drive the truck only when the battery door is locked.

**NOTE**

*The apertures in the door are necessary for forced ventilation and must not be blocked.*

– If the battery door is fully open, grasp the battery door by its handle and open it slightly further.

This will release the latch in the hinge.

– Close the battery door by hand until it engages in the lock.

The battery door must be locked in place.

The truck is equipped with a door contact switch for the battery door. If the battery door is not fully closed, the message `Close battery door` appears on the display of the display-operating unit. The truck will not move.

**NOTE**

*The authorised service centre can parameterise this setting so that the truck travels at 3 km/h when the battery door is open.*

## Special notes for installing the lithium-ion battery

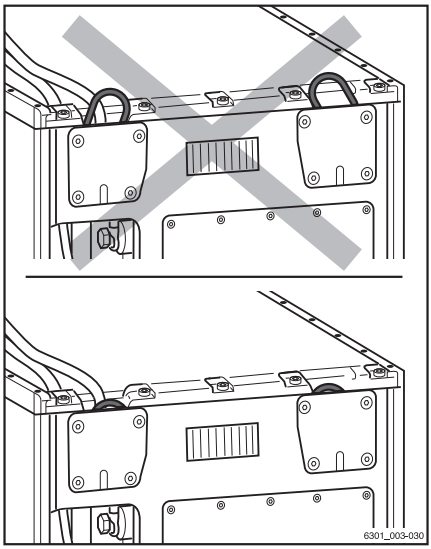


With the exception of the following special notes, lithium-ion batteries are replaced in the same way as lead-acid batteries.

– Push down the lifting eyes before inserting the battery into the battery compartment. Make sure that the lifting eyes **do not** protrude.

The lifting eyes may bend in the event of a collision with the truck chassis.

– Install the lithium-ion battery with the display facing the outside of the truck so that it can be read when the battery door or battery cover is open.

– Lay the battery cable on the battery. Make sure that the cable does not come into contact with the truck chassis during installation.

## Replacing the battery using a truck

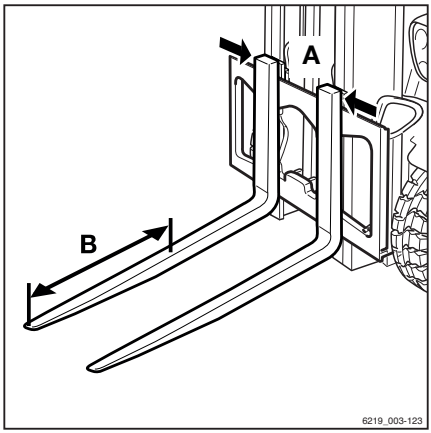


### Preparing

**⚠ WARNING**

Risk of accident!

The load capacity of the truck in use must at least match the battery weight (see the battery nameplate).

– Observe the nameplates of the battery and of the change frame.

– Before picking up the battery, the fork arms must be adjusted to match the opening in the chassis (A). Push the fork arms together, selecting the maximum possible distance.

The fork arms must not be moved under the battery any further than the length of the chassis opening (B = max. 850 mm).

It is useful to mark this measurement (B) (measured from the fork tips) on the fork arms.

## Removing the battery

– Park the truck securely and switch it off.

– Open the battery door.

**⚠ CAUTION**

Risk of component damage!

If you disconnect the battery male connector while the key switch is switched on (under load), an arc will be produced. This can lead to erosion at the contacts, which considerably shortens the service life of the contacts.

– Switch off the key switch before disconnecting the battery male connector.

– Disconnect the battery male connector. ▷

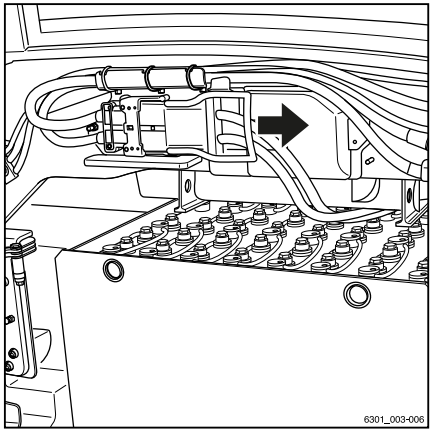

**⚠ WARNING**

Risk of crushing/shearing!

No one must stand directly next to the battery or between the battery and the truck when removing and inserting the battery.

**⚠ CAUTION**

Risk of damage!

– Position the battery cable on the battery in such a way that it cannot be crushed, either when removing or inserting the battery or when closing the battery door.

– Open the battery locks (1). ▷

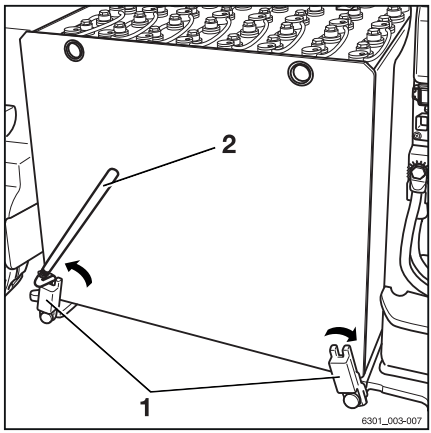


**NOTE**

*If the battery locks cannot be opened by hand, the coupling pin (2) from the counterweight can be used as a lever extension.*

– Carefully drive the truck under the battery.

– Carefully lift the battery until it maintains a sufficient distance from the seating and from the chassis above.

– Position the fork arms horizontally.

**⚠ CAUTION**

Risk of damage!

– Lower the battery immediately if it knocks against the chassis above.

– Slowly remove the battery from the battery compartment.

## Transporting and setting down the battery

**⚠ WARNING**

Risk of crushing or shearing!

The battery must be transported very carefully, i.e. at low speed, using slow steering movement and careful braking.

– Do not use the methods described here to transport the battery over long distances.

– Transport the battery to the intended storage space.

**⚠ CAUTION**

Risk of damage!

The battery must be stored on a suitable beam support or on suitable racking.

The battery must not be stored on a wooden beam or any similar object.

– Set down the battery.

## Installing the battery

– Pick up the battery and transport it to the truck.

**⚠ CAUTION**

Risk of component damage!

If the lifting eyes protrude from the lithium-ion battery (variant), they will strike the truck chassis and bend.

– Before inserting the lithium-ion battery (variant), push the lifting eyes down in the tray and make sure that they do **not** protrude.

▷

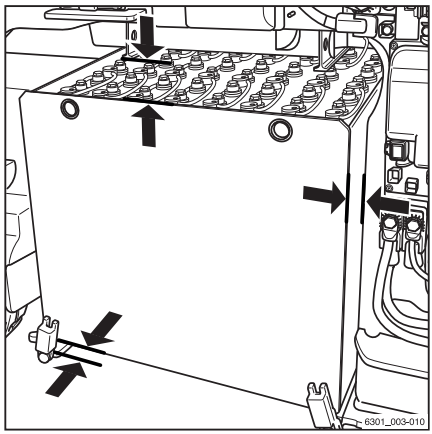

**NOTE**

*Do **not** straighten any bent lifting eyes; have them replaced by the authorised service centre.*

– Carefully insert the battery into the battery compartment.

When doing so, ensure that

- Before inserting, the battery cable is positioned on the battery in such a way that it will not become trapped when the battery is inserted
- The load-carrying equipment is at a right angle to the truck
- The gaps are maintained for the entire time that the battery is being inserted, and to ensure that the battery is inserted to a sufficient depth
- the display on the lithium-ion battery (variant) points towards the battery door.

**DANGER**

**Risk of crushing or shearing!**

While inserting the battery, avoid putting your hands between the battery and the chassis.

**CAUTION**

Risk of damage!

– Position the battery cables on the battery in such a way that they cannot be crushed, either when removing or inserting the battery or when closing the battery door.

Once the battery is correctly positioned in the battery compartment:

– Carefully lower the battery.

– Carefully move the lifting accessories out from under the battery.

## Replacing and transporting the battery

**⚠ CAUTION**

Risk of component damage!

If the battery male connector is connected when the key switch is switched on (under load), a jump spark will be produced. This can lead to erosion at the contacts, which considerably shortens the service life of the contacts.

– Do not connect the battery male connectors with the key switch switched on.
– Make sure that the key switch is switched off before connecting the battery male connector.

– Ensure that the battery male connector and the plug connection are dry, clean and free of foreign objects.
– Close the battery locks. ▷

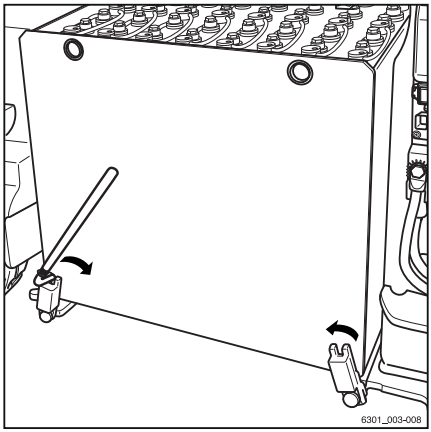


**NOTE**

*The battery door will close only when the battery is locked.*

– Insert the battery male connector fully into the plug connection on the truck. ▷
– Close the battery door.

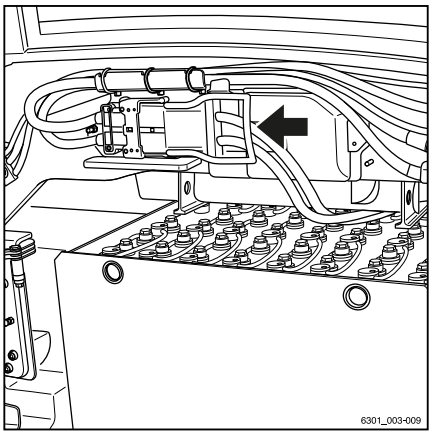

# Replacing the battery using a change frame (variant)

**⚠ WARNING**

Risk of accident!

The load capacity of the truck or lift truck in use must at least match the weight of the battery and the weight of the change frame.

– Observe the nameplates of the battery and of the change frame.

**⚠ CAUTION**

Risk of damage!

Place the battery change frame along with the battery only on a firm surface with sufficient load-bearing capacity.

Do not place the battery change frame with the battery on a soft surface or in a rack.

The battery change frame (variant) features an advantageous design that allows a truck or pallet stacker to pick up the battery quickly. The battery remains on the change frame for charging and storage. The change frame fits between the battery holding fixtures in the battery compartment of the truck. Once the battery has been set down on its holding fixtures, the change frame is moved back out of the truck.

## Removing the battery

– Park the truck securely.

– Open the battery door.

**⚠ CAUTION**

Risk of component damage!

If you disconnect the battery male connector while the key switch is switched on (under load), an arc will be produced. This can lead to erosion at the contacts, which considerably shortens the service life of the contacts.

– Switch off the key switch before disconnecting the battery male connector.

– Disconnect the battery male connector. ▷

**⚠ WARNING**

Risk of crushing/shearing!

No one must stand directly next to the battery or between the battery and the truck when removing and inserting the battery.

**⚠ CAUTION**

Risk of damage!

– Position the battery cable on the battery in such a way that it cannot be crushed, either when removing or inserting the battery or when closing the battery door.

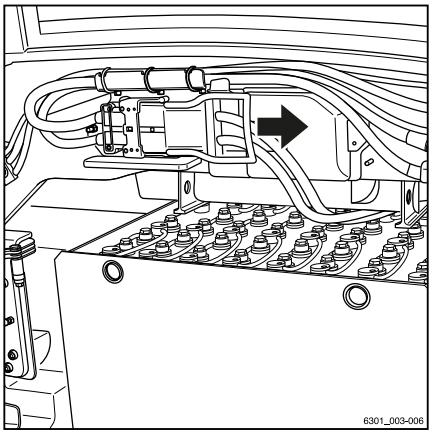


– Open the battery locks (1). ▷

**NOTE**

*If the battery locks cannot be opened by hand, the coupling pin (2) from the counterweight can be used as a lever extension.*

– Ensure that the maximum load capacity of the change frame is not exceeded.

The maximum load capacity of the change frame is specified on the identification plate.

– Before picking up the change frame, adjust the fork arm distance.

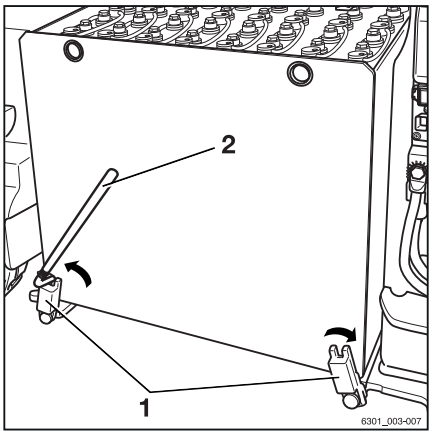

– Position the change frame (3) under the battery (2) so that the centre of the battery (1) is in line with the recess (4) in the change frame.

This alignment ensures that the battery is positioned centrally on the change frame. The battery must be positioned centrally on the change frame in order for the change frame to be moved into the truck and to reduce the risk of the battery tipping over when being moved. If multiple batteries are used, it is advisable to permanently mark the centre of the battery (1) (e.g. using a strip of adhesive tape).

▷

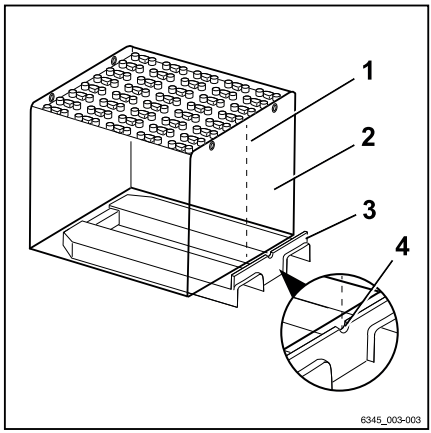


**⚠ CAUTION**

Risk of component damage!

– Move the change frame under the battery only up to the edge of the stop.

– Carefully move the change frame under the battery.

– Carefully lift the battery up and out of the truck. Pay attention to the distance to the chassis.

– Slowly remove the battery from the battery compartment.

## Transporting and setting down the battery

**⚠ WARNING**

Risk of crushing or shearing!

The battery must be transported very carefully, i.e. at a low speed, using slow steering movements and careful braking.

– Do not use the methods described here to transport the battery over long distances.

The battery (1) can remain on the change frame (2). The change frame can then be used to set down the battery.

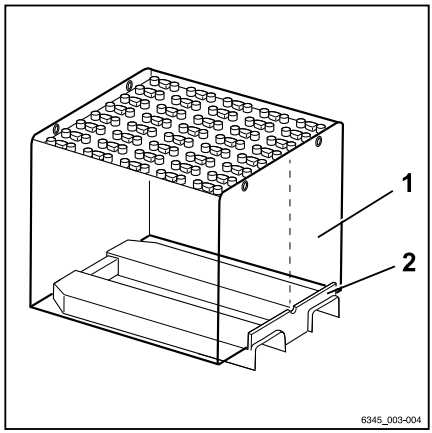


- If a substructure (3) is used to set down the battery (1), ensure that the change frame (2) does not protrude beyond the battery.
- Set down the battery on a stable base so that it is secure and position the battery against the stops on the base.

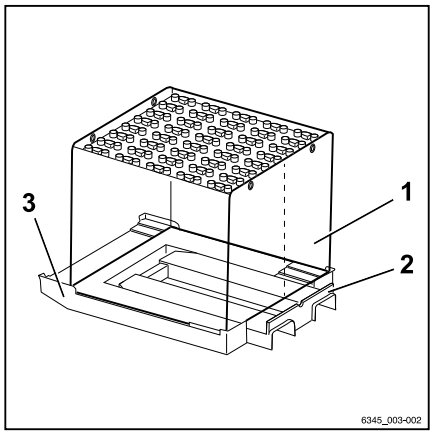


## Installing the battery

- Remove the change frame.
- Pick up a charged battery using the change frame and transport the battery to the truck.
- Position the battery cable on the battery so that it will not become trapped when the battery is inserted.
- Position the battery at a right angle to the truck.

**⚠ CAUTION**

Risk of component damage!

If the lifting eyes protrude from the lithium-ion battery (variant), they will strike the truck chassis and bend.

- Before inserting the lithium-ion battery (variant), push the lifting eyes down in the tray and make sure that they do **not** protrude.

**NOTE**

*Do **not** straighten any bent lifting eyes; have them replaced by the authorised service centre.*

– Carefully insert the battery into the battery compartment.

– Ensure that the display on the lithium-ion battery (variant) points towards the battery door.

– Carefully place the battery onto the battery holding fixtures.

– Carefully remove the change frame from under the battery.

– Close the battery locks.

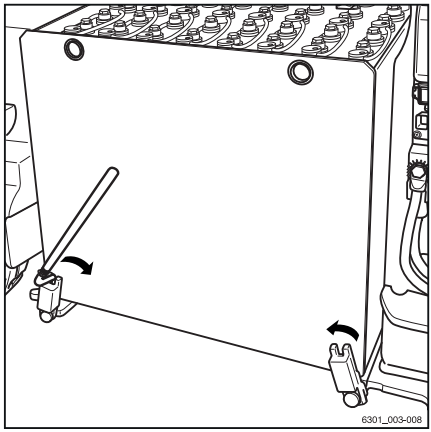


**NOTE**

*The battery door will close only when the battery is locked.*

**CAUTION**

Risk of component damage!

If the battery male connector is connected when the key switch is switched on (under load), a jump spark will be produced. This can lead to erosion at the contacts, which considerably shortens the service life of the contacts.

– Do not connect the battery male connectors with the key switch switched on.

– Make sure that the key switch is switched off before connecting the battery male connector.

– Ensure that the battery male connector and the plug connection are dry, clean and free of foreign objects.

## Replacing and transporting the battery

– Insert the battery male connector fully into the plug connection on the truck.

– Close the battery door.

▷

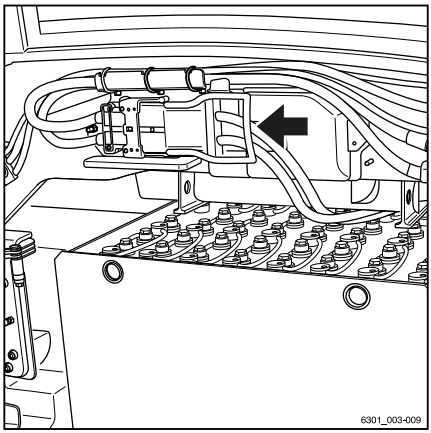

# Replacing the battery using an electric battery carrier (variant)

**⚠ DANGER**

**Risk of explosion if the battery is not extended!**

The battery carrier reduces the space between the battery and the battery hood. During charging, lead-acid batteries generate explosive oxyhydrogen gas. Sufficient quantities of this gas must be removed from the truck. This gas can only be removed if the battery is fully extended for the entire charging process. Charging a lead-acid battery within the truck is not permitted.

– Fully extend the battery when charging.

**⚠ DANGER**

**The battery weight and dimensions affect the stability of the truck.**

When replacing the battery, the weight ratios must not be changed. The battery weight must remain within the weight range specified on the nameplate. The location of ballast weights must not be changed.

## Prerequisites

**⚠ WARNING**

Risk of injury when extending the battery.

The battery is extended out into the marked area (1). People must not stand in this area.

The area (1) extends over the width of the battery compartment and the extension range of the battery carrier.

– Only stand in the operator's position (2).

The following prerequisites must be fulfilled when replacing a battery using an electric battery carrier:

- The extension area (1) must be free of obstacles.
- The ground must be clean, even and offer sufficient load capacity
- The fork must be safely set down on the ground
- The parking brake must be applied (A)
- The emergency off switches on the driver's compartment and next to the operating device for extending and retracting the battery carrier on the counterweight must be unlocked.

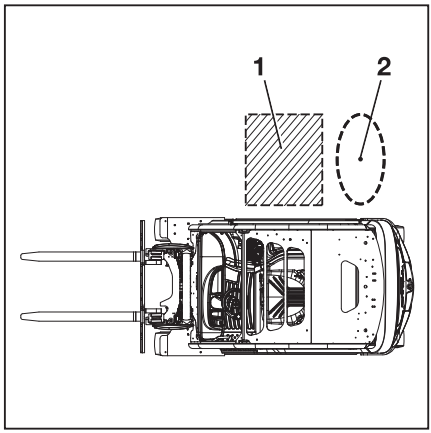

- The driver's seat must not be under load (B)
- The operator must be in the operator's position (2)

NOTE

*When the battery is deeply discharged (less than 10% capacity), it cannot be removed. In this case, connect a reserve battery and do not charge the battery in the truck.*

## Emergency off function when extending and retracting the battery

The emergency off switch is located next to the operating device for extending and retracting the battery carrier on the counterweight.

– In an emergency, actuate the emergency off switch (M).

## Extending the battery

– (A) Apply the parking brake. ▷

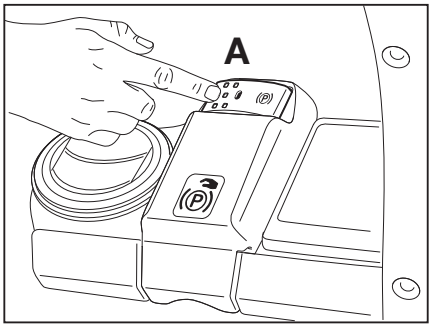


– (B) Make sure that there is no load on the driver's seat. ▷

– Open the battery door.

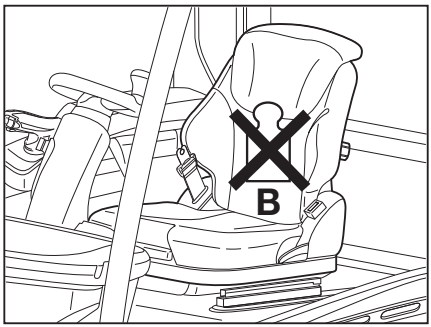


**WARNING**

Risk of injury!

– Open the battery door until the door lock engages and the door cannot close by itself.

– (C) Open the battery locks as shown by the direction of the arrows. ▷

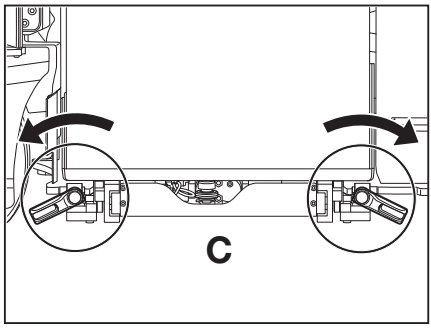


– (D) Make sure that the emergency off switch is unlocked. ▷

This also applies to the emergency off switch on the driver's compartment.

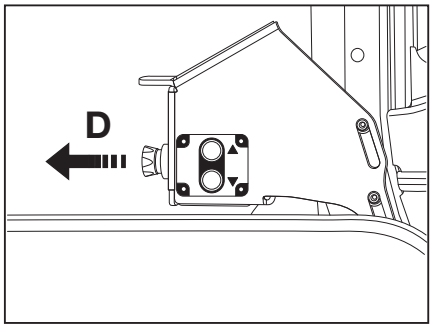


– (E) Push and release the extension button. Push the extension button again and hold down the button. ▷

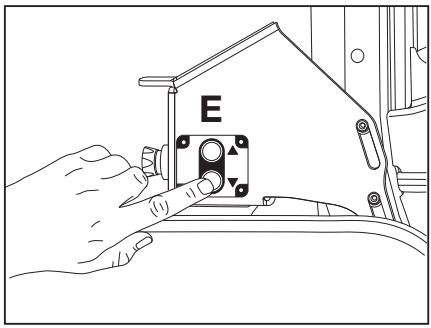

(F) The battery carrier extends. ▷

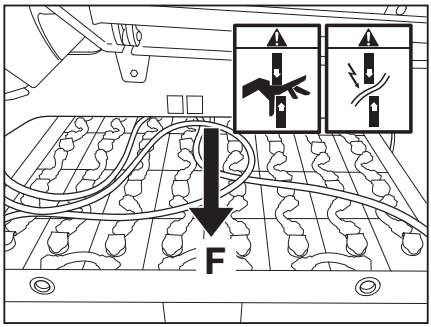


**⚠ WARNING**

Risk of crushing!

Never reach under the battery to remove obstacles.

– Retract the battery and remove the obstacle.

– Make sure that the battery cable is not damaged when the battery carrier is extended.

– (G) Disconnect the battery male connector from the plug connection of the truck. ▷

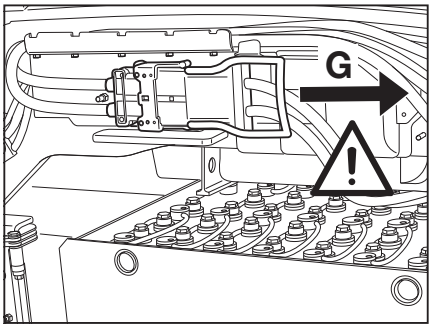


## After extending the battery fully

– Place a rubber mat on any batteries that have exposed terminals or connectors to prevent short circuits.

– (H) Remove the battery from the carrier using suitable lifting gear. For more information see the section entitled "Transporting the battery by crane". ▷

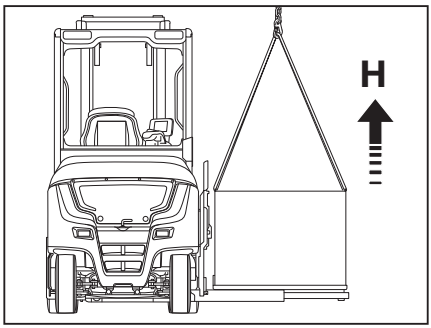


– Ensure that the truck is parked at a sufficient distance from any obstacles to prevent damaging the truck when lifting the battery using a crane.

– (I) Position a charged battery securely on the carrier.

– Make sure that the battery does not protrude beyond the contours of the carrier.

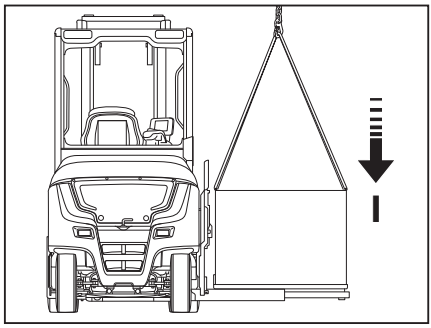


## Inserting the battery

**⚠ CAUTION**

Risk of damage to the battery male connector!

If the battery male connector is connected while the truck is switched on (under load), a transition spark will be produced. This transition spark can damage the contacts and considerably shorten the service life of the contacts.

– Ensure that the truck is switched off.

– (J) Connect the battery male connector to the plug connection on the truck.

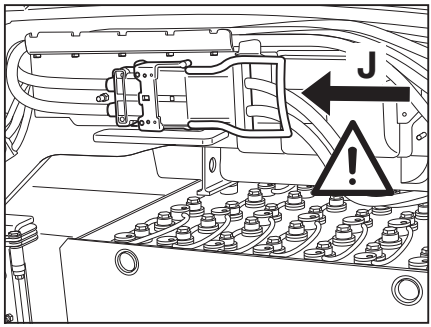


– (K) Push and release the retraction button. Push the retraction button again and hold down the button.

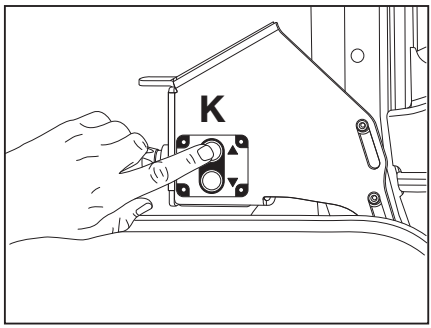

(L) The battery carrier will retract. ▷

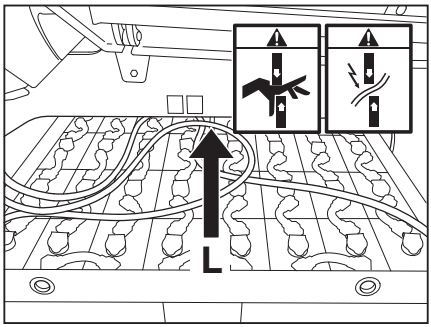


**⚠ WARNING**

Risk of crushing!

Never reach under the battery to remove obstacles.

– Extend the battery again.
– Lift the battery again using the crane, swivel the battery to the side and remove the obstacle.

**NOTE**

*If obstacles hinder the movement of the battery carrier, release the push button.*

– Make sure that the battery cable is not damaged when the battery carrier is retracted.
– (M) Close the battery locks as shown by the direction of the arrows. ▷
– Close the battery door.

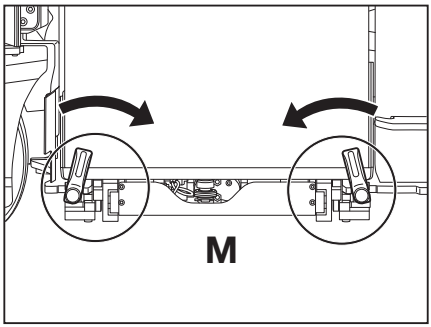


**NOTE**

*If the truck is equipped with the "FleetManager" variant and this feature is to be used, the driver must authenticate themself. Otherwise, the truck will switch off after a certain period of time.*

## Transporting the lead-acid battery by crane ▷

**⚠ DANGER**

**There is risk of fatal injury from being struck by falling loads!**

– Never walk or stand underneath suspended loads.

The tray for the lead-acid battery (1) is equipped with four lifting eyes. The battery may only be transported by crane using a lifting gear and bridge piece (2) that are suitable in terms in size and load capacity.

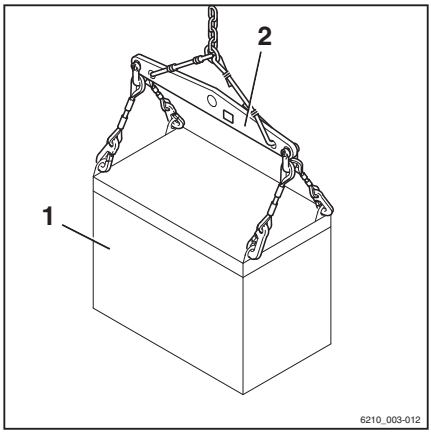

- To avoid short circuits, cover batteries with open terminals or connectors with a rubber mat.
- Observe the operating instructions for the lifting gear.
- Attach the battery (1) to suitable lifting gear (2).
- Lift the battery carefully and ensure that it hangs straight on the lifting gear.

The lifting gear must be vertical when lifting, so that no lateral pressure is applied to the tray.

- Set the battery down carefully.
- Remove the lifting gear after the battery has been set down.
- Do not place slack lifting gear on the battery cells or allow it to fall on the battery cells.

## Transporting the lithium-ion battery by crane

**⚠ DANGER**

**There is risk of fatal injury from being struck by falling loads!**

- Never walk or stand underneath suspended loads.

**⚠ WARNING**

Risk of accident due to weakened lifting eyes.

If bent lifting eyes are straightened, they lose their rigidity. The lifting eyes are then no longer able to support the weight of the battery. The battery may fall.

- **Do not** straighten bent lifting eyes.
- Have bent lifting eyes replaced by the authorised service centre.

The lithium-ion battery (1) is equipped with four extendable lifting eyes. The battery may only be transported by crane using a lifting gear and bridge piece (2) that are suitable in terms in size and load capacity.

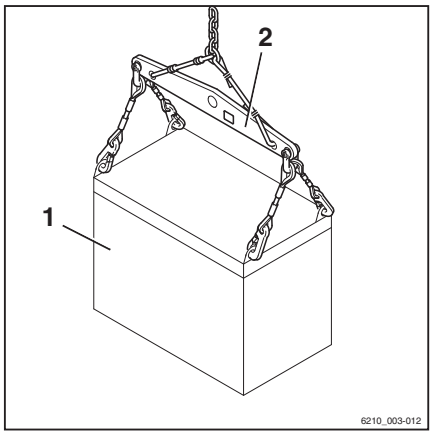

## Replacing and transporting the battery

– Pull out the two lifting eyes (1) on each side and tilt them towards each other. ▷

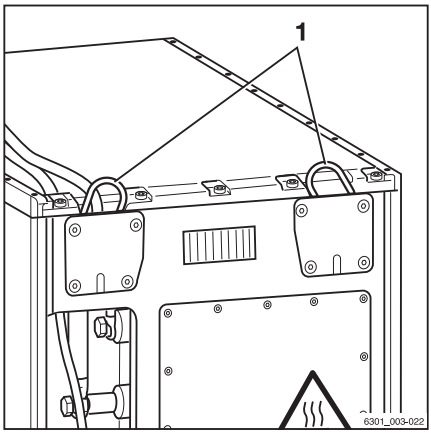


The lifting eyes are locked in this position.

– Observe the operating instructions for the lifting gear.

– Attach the lifting gear to the four lifting eyes.

– Lift the battery carefully and ensure that it hangs straight on the lifting gear.

The lifting gear must be vertical when lifting, so that no lateral pressure is applied to the tray.

– Set the battery down carefully.

– Remove the lifting gear after the battery has been set down. Lift up and release the lifting eyes to lower them.

# Li-Ion ready

## Description

All RX electric trucks are also available to order as Li-Ion ready versions (variants). On these trucks, the authorised service centre can simply replace the lead-acid battery with a lithium-ion battery.

STILL lithium-ion batteries are exclusive STILL innovations and are matched to the application and the truck in question. This means that STILL lithium-ion batteries meet the highest demands and achieve a particularly high quality and safety standard. Three different lithium-ion batteries are available from STILL, depending on the voltage.

Advantages of the lithium-ion battery:

- No battery replacement required
- Intermediate charging possible and short charging times
- More power with less energy consumption
- Maintenance-free batteries
- Decentralised, safe charging points directly at the point of use
- Double the service life

Lead-acid and lithium-ion batteries in comparison

| | Lithium-ion | Lead-acid |
|---|---|---|
| Charging cycles | 2500...4000 full charging cycles | 1200...1300 charging cycles |
| Efficiency | High | Medium |
| Performance | Total duration | Decreasing from 50% |
| Maintenance | Maintenance-free | Not maintenance-free |
| Training requirement | Low | Medium |

## Li-Ion ready

If the truck is Li-Ion ready, the truck has an access point at the side or the rear for charging the lithium-ion battery. ▷

Only approved STILL lithium-ion batteries may be used to retrofit a lithium-ion battery.

**⚠ CAUTION**

Component damage due to excessive charging currents.

If the truck is equipped with quick charge access and external battery chargers are used, defined charging currents must **not** be exceeded:

300 A for lead-acid batteries (200 A for RX20 14–20)

375 A for lithium-ion batteries

– Limit the charging current according to the installed battery.

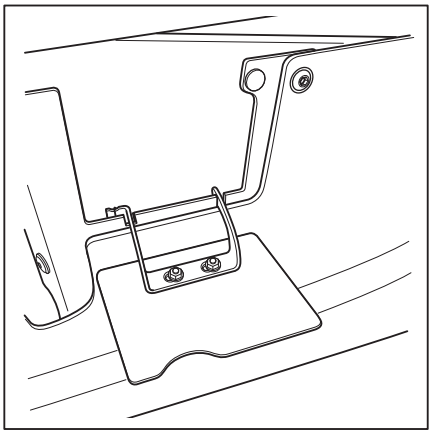

Example illustration

# Cleaning the truck

## Cleaning the truck

**⚠ WARNING**

Risk of injury from falling off the truck!

When climbing onto the truck, there is a risk of getting stuck or slipping and falling. Use suitable equipment to reach higher points on the truck.

- Use only the steps provided for this purpose to climb onto the truck.
- Use equipment such as stepladders or platforms to reach inaccessible areas.

**⚠ WARNING**

Risk of fire due to flammable cleaning materials!

Flammable cleaning materials can be ignited by hot components.

- Do not use any flammable cleaning materials.

**⚠ CAUTION**

Risk of fire due to flammable materials!

Deposits and solids can be ignited by hot components, e.g. drive units.

- Remove deposits and solids.

**⚠ CAUTION**

Risk of damage to the battery male connector when disconnecting!

If the battery male connector is disconnected while the key switch is switched on under load, an arc will be produced. The arc can damage the contacts and considerably shorten the service life of the contacts.

- Switch off the key switch.
- Only disconnect the battery male connector while the key switch is switched off.

**⚠ CAUTION**

If water penetrates the electrical system, there is a risk of a short circuit occurring!

- Strictly adhere to the following steps.

**⚠ CAUTION**

Excessive water pressure or water and steam that are too hot can damage truck components.

– Strictly adhere to the following steps.

**⚠ CAUTION**

Possible component damage due to compressed air.

– If components are cleaned with compressed air, the air must have a maximum pressure of 0.15 bar.

This prevents liquids or small solids from being forced through slots or openings inside components and causing damage.

**⚠ CAUTION**

Abrasive cleaning materials can damage the surfaces of components!

Using abrasive cleaning materials that are unsuitable for plastics can cause plastic parts to dissolve or become brittle. The screen on the display-operating unit could become cloudy.

– Strictly adhere to the following steps.

– Park the truck securely.
– Switch off the key switch.
– Disconnect the battery male connector.
– Do not spray electric motors and other electrical components or their covers directly with water.
– Use only high-pressure cleaners with a maximum output power of up to 60 bar and 85 °C.
– If a high-pressure cleaner is used, maintain a distance of at least 1 m between the nozzle and the object being cleaned.
– Do not aim the cleaning jet directly at adhesive labels or decal information.
– Remove all deposits and accumulations of foreign materials in the vicinity of hot components.
– Use only non-flammable fluids for cleaning.
– Observe the manufacturer's guidelines for working with cleaning materials.

- Clean plastics only with cleaning materials intended for plastics.
- Clean the truck exterior using water-soluble cleaning materials and water. Cleaning with a water jet, a sponge or a cloth is recommended.
- Clean all accessible areas.
- Before lubrication, clean the oil filling openings and the area around the oil filling openings, as well as the lubricating nipples.

## Cleaning the electrical system

**⚠ WARNING**

Danger of electric shocks due to residual capacity!

- Never reach into the electrical system with your bare hands.

**⚠ CAUTION**

Cleaning electrical system parts with water can damage the electrical system.

Cleaning electrical system parts with water is forbidden!

- Do not remove covers etc.
- Only use dry cleaning materials according to the specifications in the section "Cleaning the truck".

**⚠ CAUTION**

Possible component damage due to compressed air.

- If components are cleaned with compressed air, the air must have a maximum pressure of 0.15 bar.

This prevents liquids or small solids from being forced through slots or openings inside components and causing damage.

The components of the electrical system are fitted underneath the cover sheet of the counterweight etc.

- Clean the electrical system parts with a metal-free brush and blow the dust off with low-pressure compressed air.

## Cleaning load chains

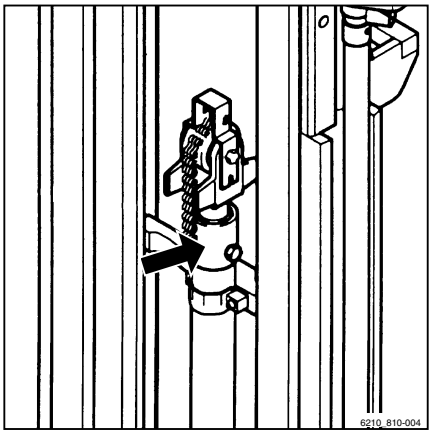


**⚠ WARNING**

Risk of accident!

Load chains are safety elements.

The use of cold/chemical cleaners or fluids that are corrosive or contain acid or chlorine can damage the chains and is forbidden!

– Observe the manufacturer's guidelines for working with cleaning materials.

– Place a collection vessel under the lift mast.

– Clean with paraffin derivatives, such as benzine.

– When using a steam jet, do not use additional cleaning agents.

– Remove any water in the chain links using compressed air immediately after cleaning. Move the chain several times during this procedure.

– Immediately after drying the chain, spray it with chain spray. Move the chain several times during this procedure.

For chain spray specifications, see the "Maintenance data table" chapter.

**ENVIRONMENT NOTE**

*Dispose of any fluid that has been spilled or collected in the collection vessel in an environmentally friendly manner. Follow the statutory regulations.*

## Cleaning the windows

Any glass, for example cab windows (variant), must always be kept clean and free of ice. This is the only means of guaranteeing good visibility.

**⚠ CAUTION**

Do not damage the rear window heater (inside).

– (1) Clean the rear window very carefully. Do not use sharp objects!

– Clean the windows with a soft cloth and commercial window cleaner.

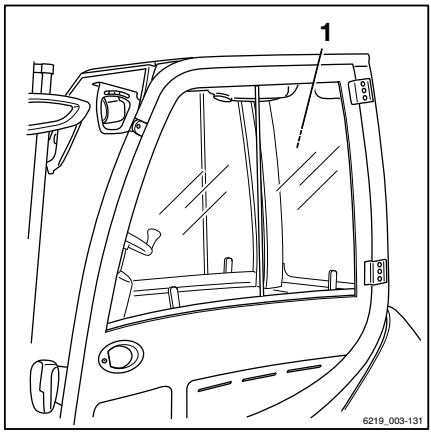


## After cleaning

**⚠ CAUTION**

Risk of short circuit!

Ingress of moisture or dirt into the battery male connector and plug connection can lead to an electrical short circuit.

– Use compressed air to dry the battery male connector and the plug connection before connecting them.

– Use compressed air to remove any foreign objects that may be lodged in the battery male connector and the plug connection.

– Carefully dry the truck, e.g. using compressed air.

– Lubricate the joints and actuators.

– Lubricate the truck according to the "lubrication plan".

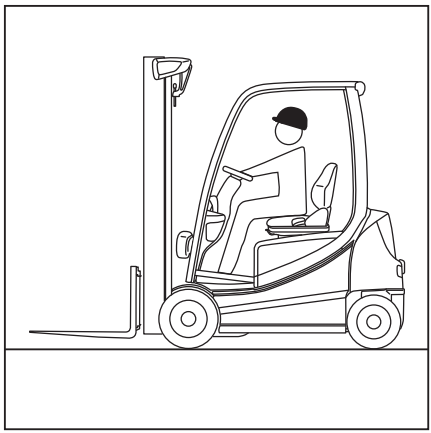

**NOTE**

*The more often the truck is cleaned, the more frequently the truck must be lubricated.*

# Transporting the truck

## Transport

**⚠ CAUTION**

Risk of material damage from overloading!

If the truck is driven onto a means of transport, the load capacity of the means of transport, ramps and loading bridges must be greater than the total actual weight of the truck. Components can be permanently deformed or damaged due to overloading.

– Determine the total actual weight of the truck.
– Only load the truck if the load capacity of the means of transport, ramps and loading bridges is greater than the total actual weight of the truck.

### Determining the total actual weight

– Park the truck safely.
– Determine the unit weights by reading the truck nameplate and, if necessary, the attachment nameplate (variant).
– Add together the determined unit weights to obtain the total actual weight of the truck:

Net weight (1)
\+ Maximum permissible battery weight (2)
\+ Ballast weight (variant) (3)
\+ Net weight of attachment (variant)
\+ 100 kg allowance for driver
= Total actual weight

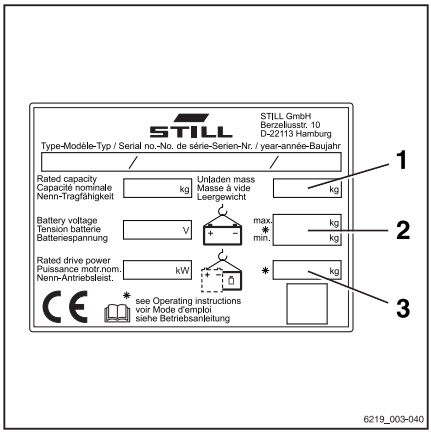

**⚠ DANGER**

**Risk of accident from the truck crashing!**

Steering movements can cause the rear of the truck to veer off the loading bridge towards the edge. This may cause the truck to crash.

- Before driving across a loading bridge, ensure that the loading bridge is properly attached and secured.
- Ensure that the transport vehicle onto which the truck is to be driven has been sufficiently secured to prevent it from shifting.
- Maintain a safe distance from edges, loading bridges, ramps, working platforms etc.
- Drive slowly and carefully onto the transport vehicle.

## Wedging the wheels

- Park the truck securely.
- Secure the truck against rolling away by placing a wedge (1) in front of each front wheel and behind each back wheel.

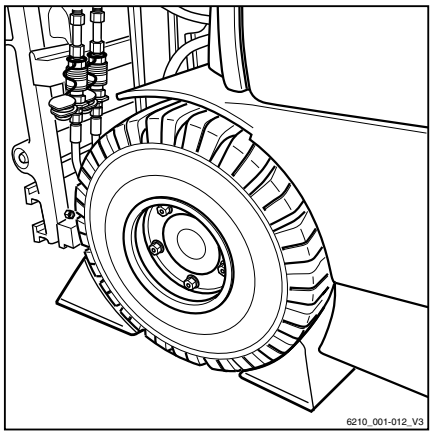


**⚠ CAUTION**

Potential for damage to the battery male connector!

If the battery male connector is disconnected while the key switch is on (under load), an arc will be produced. This can lead to erosion at the contacts, which considerably shortens the service life of the contacts.

- Switch off the key switch before disconnecting the battery male connector.
- Do not disconnect the battery male connector while the key switch is switched on, except in an emergency.

- Ensure that the key switch is switched off.
- Disconnect the battery male connector.

**NOTE**

*If the parking brake cannot be applied by pressing the push button, refer to the section entitled "Emergency actuation of the parking brake" in the chapter "Procedure in emergencies".*

## Lashing down

**⚠ DANGER**

**The load may slip if the harnesses slip!**

The truck must be lashed securely so that it cannot move during transportation.

– Use only harnesses that are adequately sized in relation to the weight of the truck.

– Ensure that the harnesses are tightened securely and that the pads cannot slip off.

**⚠ CAUTION**

Abrasive harnesses can rub against the surface of the truck and cause damage.

– Position slip-resistant pads (e.g. rubber mats or foam) underneath the lifting points.

### Lashing at the front

▷

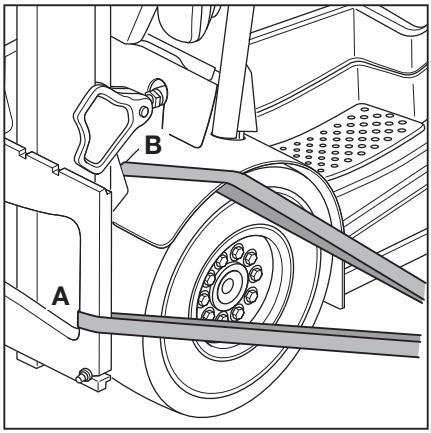


There are two ways to connect the harness to the front of the truck.

A Looping around the fork carriage

If the fork carriage is attached, the harness must be attached to the truck here.

– To do this, loop the harness around the fork carriage as shown.

– Lash the truck at an angle towards the rear.

B Looping around the mudguard

If no fork carriage is fitted, the harness can be attached to the truck at the mudguard.

– To do this, loop the harness around the mudguard as shown.

– Lash the truck at an angle towards the rear.

**Lashing at the rear** ▷

– Position the harness for the coupling pin around the coupling pin as shown.

– Lash the truck at an angle towards the front.

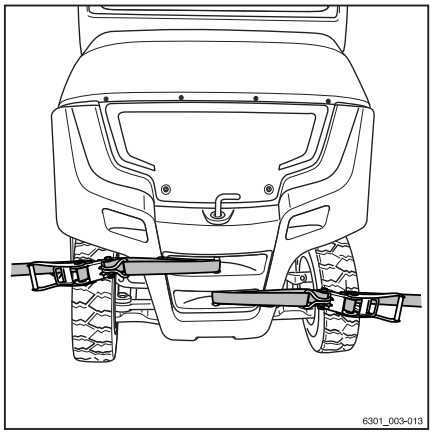


## Crane loading

Crane loading is only intended for transporting the complete truck, including the lift mast, for its initial commissioning. This may be performed only by the authorised service centre with the harnesses expressly provided and approved for this purpose.

# Decommissioning

## Decommissioning and storing the truck

**⚠ CAUTION**

Damage to components due to incorrect storage!

Improper storage or decommissioning for a period of more than two months can result in corrosion damage to the truck. If the truck is parked in an ambient temperature of below -10°C for an extended period, the batteries will cool down. The electrolyte may freeze and damage the batteries.

– Store the truck in a dry, clean, frost-free and well-ventilated environment.
– Implement the following measures before decommissioning.

### Measures to be implemented before decommissioning

– Clean the truck thoroughly; see the chapter entitled "Cleaning the truck".
– Lift the fork carriage to the stop several times.
– Tilt the lift mast forwards and backwards several times and, if fitted, move the attachment repeatedly.
– To relieve the strain on the load chains, lower the fork onto a suitable supporting surface, e.g. a pallet.
– Check the hydraulic oil level.
– Apply a thin layer of oil or grease to all uncoated moving parts.
– Lubricate the truck according to the "lubrication plan".
– Lubricate the joints and actuators.

**⚠ CAUTION**

Potential for damage to the battery male connector!

If the battery male connector is disconnected while the truck is switched on (under load), an electric arc will be produced. This can lead to erosion of the contacts, which considerably shortens the service life of the contacts.

– Switch off the truck before the battery male connector is disconnected.
– Do not disconnect the battery male connector while the truck is switched on, except in an emergency.

– Disconnect the battery male connector.
– Check the battery condition, acid level and acid density.
– Service the battery.

**NOTE**

*Only store batteries that are fully charged.*

– Spray all exposed electrical contacts with a suitable contact spray.

**⚠ CAUTION**

Tyre deformation as a result of continuous loading on one side!

Have the truck raised and jacked up by the authorised service centre so that all wheels are off the ground. This prevents permanent deformation of the tyres.

– Only have the truck raised and jacked up by the authorised service centre.

**⚠ CAUTION**

Risk of corrosion damage due to condensation on the truck!

Many plastic films and synthetic materials are watertight. Condensation water on the truck cannot escape through these covers.

– **Do not** use plastic film as this facilitates the formation of condensation water.
– Cover with vapour-permeable material, e.g. cotton.

– Cover the truck to protect it from dust.
– If the truck needs to be shut down for even longer periods, contact the authorised

service centre to find out about additional courses of action.

## Use after storage or decommissioning

If the truck has been decommissioned for longer than six months it must be checked carefully before being used again. As with the annual safety inspection, this check must also include all safety-related aspects of the truck.

– Clean the truck thoroughly; see the chapter entitled "Cleaning the truck".
– Lubricate the joints and actuators.
– Check the battery condition, acid level and acid density.
– Check the hydraulic oil for condensation water. Change the hydraulic oil if necessary.
– Arrange for the authorised service centre to perform the same inspections and tasks that were carried out before initial commissioning.
– Perform the "visual inspections and function checking".

The following points in particular must be checked:

- Drive
- Controller
- Steering
- Brakes (service brake, parking brake)
- Lifting system (lifting accessories, load chains, mounting)

NOTE

*For further information, see the workshop manual for the truck or contact the authorised service centre.*

# 5

# Maintenance

# Safety regulations for maintenance

## General information

To prevent accidents during maintenance and repair work, all necessary safety measures must be taken, e.g.:

- Apply the parking brake.
- Turn off the key switch and remove the key.
- Disconnect the battery male connector.
- Ensure that the truck cannot move unintentionally or start up inadvertently.
- If required, have the truck jacked up by the authorised service centre.
- Have the raised fork carriage or the extended lift mast secured against accidental lowering by the authorised service centre.
- Insert an appropriately sized wooden beam as an abutment between the lift mast and the cab, and secure the lift mast to prevent it tilting backwards unintentionally.
- Observe the maximum lift height of the lift mast, and compare the dimensions from the technical data with the dimensions of the hall into which the truck is to be driven. These steps are taken to prevent a collision with the ceiling of the hall and to avoid any damage caused as a result.

## Working on the hydraulic equipment

The hydraulic system must be depressurised prior to all work on the system.

## Working on the electrical equipment

Work may only be performed on the electrical equipment of the truck when it is in a voltage-free state. Function checks, inspections and adjustments on energised parts must only be performed by trained and authorised persons, taking the necessary precautions into account.

Rings, metal bracelets etc. must be removed before working on electric components.

To prevent damage to electronic systems with electronic components, such as an electronic driving regulator or lift control, these components must be removed from the truck prior to the start of electric welding.

Work on the electrical system (e.g. connecting a radio, additional headlights etc.) is only permitted with approval from the authorised service centre.

## Safety devices

After maintenance and repair work, all safety devices must be reinstalled and tested for operational reliability.

## Set values

The device-dependent set values must be observed when making repairs and when changing hydraulic and electrical components. These are listed in the appropriate sections.

## Lifting and jacking up

**⚠ DANGER**

**There is a risk to life if the truck tips over!**

If not raised and jacked up properly, the truck may tip over and fall off. Only the hoists specified in the workshop manual for this truck are allowed and are tested for the necessary safety and load capacity.

- Only have the truck raised and jacked up by the authorised service centre.
- Only jack the truck up at the points specified in the workshop manual.

The truck must be raised and jacked up for various types of maintenance work. The authorised service centre must be informed that this is to take place. Safe handling of the truck and the corresponding hoists is described in the truck's workshop manual.

## Working at the front of the truck

**⚠ DANGER**

**Risk of accident due to an unsecured lift mast.**

If the lift mast or fork carriage is raised, no work may be performed on the lift mast or at the front of the truck unless the appropriate safety measures are put in place.

– When securing, only use chains with sufficient load-bearing capacity.
– Contact the authorised service centre regarding this matter.

**⚠ CAUTION**

Possibility of damage to the ceiling!

– Note the maximum lift height of the lift mast.

## Securing the lift mast against tilting backwards

**⚠ DANGER**

**Risk of accident!**

This work must only be performed by an authorised service technician.

– To secure the lift mast against tilting back, contact the authorised service centre.

## Removing the lift mast

**⚠ DANGER**

**Risk of accident!**

This work must only be performed by an authorised service technician.

– Commission the authorised service centre to remove the lift mast.

## Securing the lift mast against falling off

**⚠ DANGER**

**Risk of accident!**

This work must only be performed by an authorised service technician.

– To secure the lift mast against falling, contact the authorised service centre.

# General maintenance information

## Personnel qualifications

Only qualified and authorised personnel are allowed to perform maintenance work. Regular safety checks and checks after unusual incidents must be performed by a competent person. The competent person must conduct their evaluation and assessment from a safety standpoint, unaffected by operational and economic conditions. The competent person must have sufficient knowledge and experience to be able to assess the condition of a truck and the effectiveness of the protective devices in accordance with technical conventions and the principles for testing trucks.

### Maintenance personnel for batteries

Batteries must only be charged, serviced, and replaced by personnel who have received appropriate training in accordance with the instructions from the manufacturers of the battery, battery charger and truck.

– Follow the handling instructions for the battery and the operating instructions for the battery charger.

### Maintenance work without special qualifications

Simple maintenance work, such as checking the hydraulic oil level, may be carried out by untrained personnel. A qualification of the type held by a competent person is not required to carry out this work. The required tasks are described in the chapter entitled "Preserving operational readiness".

## Information for carrying out maintenance

This section contains all the information required to determine when the truck requires maintenance. Carry out maintenance work within the time limits according to the hour meter and using the maintenance check lists

below. This ensures that the truck remains ready for operation and provides optimal performance and service life. It is also a precondition for any warranty claims.

## Maintenance timeframe

If maintenance is needed, the message `Service required` appears on the display.

– Arrange for the authorised service centre to perform the maintenance work on the truck.

– The maintenance check lists indicate the maintenance work that is due.

The intervals are defined for standard use. Shorter maintenance intervals can be defined in consultation with the operating company, depending on the application conditions of the truck.

The following factors may necessitate shorter maintenance intervals:

- Dirty, poor-quality roadways
- Dusty or salty air
- High levels of air humidity
- Extremely high or low ambient temperatures and extreme changes in temperature
- Multi-shift operation with a high duty cycle
- Specific national regulations for the truck or individual components

## Service menu

The date when the truck requires maintenance is stored in the Service menu.

NOTE

*Access to the settings menu is only available if the truck is at a standstill and the parking brake is applied. If the parking brake is released prematurely, the settings menu will close. Access is only granted when the password is entered by the fleet manager.*

– Stop the truck.

– Apply the parking brake.

– Press the button.

– Press the softkey.

The first menu level appears.

– Activate the "Access authorisation for the fleet manager".

– Press the `Service` softkey.

The "Service menu" opens on the display.

– Press the `Maintenance interval` softkey.

This menu shows the operating hours remaining until the next scheduled maintenance interval or the latest date of the next scheduled maintenance interval.

The next maintenance due date can be set up and adjusted by the fleet manager. See the next section "Setting up and adjusting the due date counter for maintenance and safety checks".

**NOTE**

*The maintenance interval can also be configured in the status line.*

## Setting up and adjusting the due date counter for maintenance and safety checks

On delivery from the factory, the display-operating unit indicates to the driver the number of operating hours until the standard maintenance intervals of 1000 h and 3000 h are due. The display also shows the latest date for maintenance.

To do this, proceed as follows:

– Press the `Service` softkey.

– Press the `Maintenance interval` softkey.

▷

| | |
|---|---|
| **1000-h interval** | **880 h** |
| **3000-h interval** | **2120 h** |
| **Latest date:** | **04.02.22** |

## Setup and adjustment by the fleet manager

For the fleet manager, due date counters are also defined for the following checks:

- Regular testing of the truck for electric trucks and IC trucks
- Battery testing for electric trucks
- Exhaust gas testing and LPG testing for IC trucks

For these tests, the fleet manager can define the corresponding due dates with his access authorisation. To do this, proceed as follows:

– Activate the "Access authorisation for the fleet manager".

– Press the `Service` softkey.

– Press the `Maintenance interval` softkey.

– Press the softkey for the testing whose due date is to be set, e.g. `Safety check`. ▷

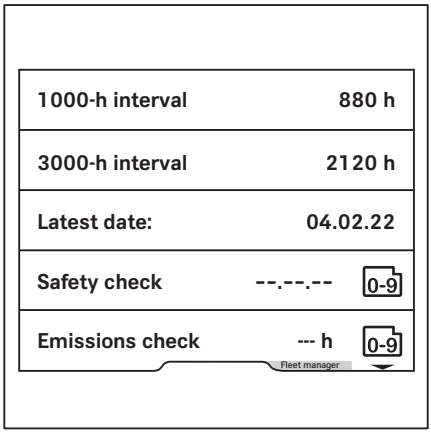

`Safety check` menu ▷

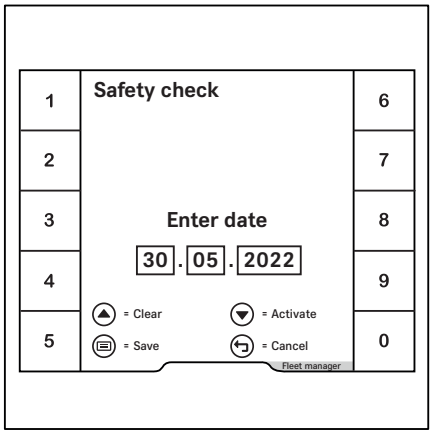


– Press the scroll button ▽ to activate the input.
– Enter the desired date using softkeys `0 to 9`.
– To `save`, press the ☰ button.

## Due date counter for individual maintenance intervals

The authorised service centre can set up additional due date counters for individual maintenance intervals, e.g. for an attachment. The fleet manager can use his access authorisation to configure these due date counters. The process is then the same as for the due date counters created ex works.

## Maintenance - 1000 hours/yearly

| At operating hours | | | | | | | | | | Carried out | |
|---|---|---|---|---|---|---|---|---|---|---|---|
| 1000 | | 2000 | | 4000 | | 5000 | | 7000 | | | |
| 8000 | | 10000 | | 11000 | | 13000 | | 14000 | | ✓ | ✖ |
| **Chassis, bodywork and fittings** | | | | | | | | | | | |
| Check the chassis for cracks. | | | | | | | | | | | |
| Check the overhead guard, plus the cab and glass panes where relevant, for damage. | | | | | | | | | | | |
| Check the rear overhead guard bearing and rubber bearings for wear. | | | | | | | | | | | |
| **Variant**: Check that the cab door sensor is working correctly and check for damage. | | | | | | | | | | | |
| Check the controls, switches and joints for damage, and apply grease and oil. | | | | | | | | | | | |
| Check that the driver's seat is working correctly and check for damage. | | | | | | | | | | | |
| Check that the driver restraint system is working correctly, check for damage and clean. | | | | | | | | | | | |
| Check the signal horn. | | | | | | | | | | | |
| **Variant**: Check that the dual pedals are working correctly, check for damage and lubricate. Carry out calibration. | | | | | | | | | | | |
| **Battery compartment** | | | | | | | | | | | |
| Check that the battery door and the sensor are working correctly and check for damage. | | | | | | | | | | | |
| Check the battery lock for damage. | | | | | | | | | | | |
| **Variant**: Check the oil level of the hydraulic battery carrier and check for leak tightness. Check all moving parts for wear and lubricate them. | | | | | | | | | | | |
| **Tyres and wheels** | | | | | | | | | | | |
| Check tyres for wear and check the air pressure if necessary. | | | | | | | | | | | |
| Check the wheels for damage and check the tightening torques. | | | | | | | | | | | |
| **Drive axle** | | | | | | | | | | | |
| Check the mounting of the drive axle and check the drive axle for leak tightness. | | | | | | | | | | | |
| Check that the conductor rails between the power modules and the motor connections are mounted correctly. | | | | | | | | | | | |
| Check the oil level in the drive wheel units. | | | | | | | | | | | |
| Change the gearbox oil in the drive wheel units (once after the first 1000 hours). | | | | | | | | | | | |
| **Steering systems** | | | | | | | | | | | |
| Check that the steering system is working correctly and check for leak tightness. | | | | | | | | | | | |
| Check that the steering wheel is securely attached and check the rotary handle for damage. | | | | | | | | | | | |

| At operating hours | | | | | | | | | | Carried out | |
|---|---|---|---|---|---|---|---|---|---|---|---|
| 1000 | | 2000 | | 4000 | | 5000 | | 7000 | | | |
| 8000 | | 10000 | | 11000 | | 13000 | | 14000 | | ✓ | ✗ |
| Check the mounting of the steering axle and check the steering axle for leak tightness. | | | | | | | | | | | |
| Grease all lubricating nipples on the steering axle | | | | | | | | | | | |
| Check the steering stop. | | | | | | | | | | | |
| **Brake system** | | | | | | | | | | | |
| Check the condition of all mechanical brake parts and check that they are working correctly. | | | | | | | | | | | |
| Check the actuation distance of the brake pedal and adjust if necessary. | | | | | | | | | | | |
| Check the filling level in the brake reservoir. | | | | | | | | | | | |
| Check that the electrical filling level monitoring function is working correctly. | | | | | | | | | | | |
| Check that the emergency actuation of the parking brake is working correctly. | | | | | | | | | | | |
| Perform a brake test. | | | | | | | | | | | |
| **Electrical system** | | | | | | | | | | | |
| Check all power cable connections. | | | | | | | | | | | |
| Check that the switches, transmitters and sensors are working correctly. | | | | | | | | | | | |
| Check the lighting and indicator lights. | | | | | | | | | | | |
| **Cooling system (converter, drive axle and hydraulics)** | | | | | | | | | | | |
| Check that the fans and the air ducts are working correctly and check for damage. | | | | | | | | | | | |
| Clean the fans and the air ducts. | | | | | | | | | | | |
| Clean the cooling fins in the cooling section. | | | | | | | | | | | |
| **Battery and accessories** | | | | | | | | | | | |
| Check the lead-acid battery for damage and check the acid density; observe the maintenance instructions provided by the manufacturer. | | | | | | | | | | | |
| **Variant**: Replace the non-return valve on lead-acid batteries with air agitation. | | | | | | | | | | | |
| **Variant**: Observe the maintenance instructions provided by the manufacturer for lithium-ion batteries. | | | | | | | | | | | |
| Check the appliance plug and the truck harness for damage. | | | | | | | | | | | |
| Check the battery male connector and the battery harness for damage. | | | | | | | | | | | |
| **Hydraulics** | | | | | | | | | | | |
| Check the condition of the hydraulic system, check that it is working correctly and check for leak tightness. | | | | | | | | | | | |
| Check the hydraulics blocking function (ISO valve). | | | | | | | | | | | |
| Check the oil level. | | | | | | | | | | | |

| At operating hours | | | | | | | | | | Carried out | |
|---|---|---|---|---|---|---|---|---|---|---|---|
| 1000 | | 2000 | | 4000 | | 5000 | | 7000 | | | |
| 8000 | | 10000 | | 11000 | | 13000 | | 14000 | | ✓ | ✖ |
| **Lift mast** | | | | | | | | | | | |
| **RX60-25-35**: Check the lift mast bearings for damage and check the tightening torque. | | | | | | | | | | | |
| **RX60-40-50**: Check the lift mast bearings for damage, lubricate the lift mast bearings and check the tightening torque. | | | | | | | | | | | |
| **RX60-25-35**: Check the front protective mat for damage and check that it is correctly attached. The front protective mat must be attached to the lift mast. | | | | | | | | | | | |
| Check the lift mast profiles for damage and wear. Lubricate the lift mast profiles. | | | | | | | | | | | |
| Check the guide in the lower (load reversal) mast profile for damage and for wear. | | | | | | | | | | | |
| Check the load chains for damage and for wear. Adjust and lubricate the load chains. | | | | | | | | | | | |
| Check the lift cylinders and connections for damage and for leak tightness. | | | | | | | | | | | |
| Check the guide pulleys for damage and for wear. | | | | | | | | | | | |
| Check the support rollers and chain rollers for damage and for wear. | | | | | | | | | | | |
| Check the play between the fork carriage stop and the run-out stop. | | | | | | | | | | | |
| Check the tilt cylinders and connections for damage and for leak tightness. | | | | | | | | | | | |
| Check the fork carriage for damage and for wear. | | | | | | | | | | | |
| Check the fork arm interlock for damage and check that it is working correctly. | | | | | | | | | | | |
| Check the fork arms for wear and for deformation. | | | | | | | | | | | |
| Check that there is a safety screw on the fork carriage or on the attachment. | | | | | | | | | | | |
| **Special equipment** | | | | | | | | | | | |
| Check the condition of the antistatic belt or antistatic electrode. | | | | | | | | | | | |
| Check the filter mat in the heating system or air conditioning, and replace if necessary. | | | | | | | | | | | |
| Check that the heating system is working correctly; observe the manufacturer's maintenance instructions. | | | | | | | | | | | |
| Check that the air conditioning is working correctly; observe the manufacturer's maintenance instructions. | | | | | | | | | | | |
| Check the attachments for wear and for damage; observe the manufacturer's maintenance instructions. | | | | | | | | | | | |
| Check the trailer coupling for wear and for damage; observe the manufacturer's maintenance instructions. | | | | | | | | | | | |
| **General** | | | | | | | | | | | |
| Read out the error numbers and clear the list. | | | | | | | | | | | |

| At operating hours | | | | | | | | | | Carried out | |
|---|---|---|---|---|---|---|---|---|---|---|---|
| 1000 | | 2000 | | 4000 | | 5000 | | 7000 | | | |
| 8000 | | 10000 | | 11000 | | 13000 | | 14000 | | ✓ | ✗ |
| Reset the maintenance interval. | | | | | | | | | | | |
| Check that the labelling is complete. | | | | | | | | | | | |
| Perform a test drive. | | | | | | | | | | | |

## Maintenance - 3000 hours/every two years

| At operating hours | | | | | | | | | | Carried out | |
|---|---|---|---|---|---|---|---|---|---|---|---|
| 3000 | | 6000 | | 9000 | | 12000 | | 15000 | | ✓ | ✗ |
| **Note** | | | | | | | | | | | |
| Perform all 1000-hour maintenance work. | | | | | | | | | | | |
| **Power unit** | | | | | | | | | | | |
| Change the gearbox oil in the drive wheel units. | | | | | | | | | | | |
| **Brake** | | | | | | | | | | | |
| Change the actuation oil for the foot brake. | | | | | | | | | | | |
| **Hydraulics** | | | | | | | | | | | |
| Change the hydraulic oil. | | | | | | | | | | | |
| Replace the return line filter and the breather filter. | | | | | | | | | | | |
| **Variant**: Replace the high-pressure filter. | | | | | | | | | | | |
| **For RX60-50 LSP600 (6337) only**: Replace the accumulator. | | | | | | | | | | | |

## Ordering spare parts and wearing parts

Spare parts are provided by our spare parts service department. The information required for ordering parts can be found in the spare parts list.

Only use spare parts as per the manufacturer's instructions. The use of unapproved spare parts can result in an increased risk of accidents due to insufficient quality or incorrect assignment. Anyone using unapproved spare parts shall assume unlimited liability in the event of damage or harm.

## Quality and quantity of the required operating materials

Only the operating materials specified in the maintenance data table may be used.

– The required consumables and lubricants can be found in the maintenance data table.

Oil and grease types of a different quality must not be mixed. This negatively affects the

lubricity. If a change between different manufacturers cannot be avoided, drain the old oil thoroughly.

Before carrying out lubricating work, filter changes or any work on the hydraulic system, carefully clean the area around the part involved.

When topping up working materials, use only clean containers!

# Lubrication plan

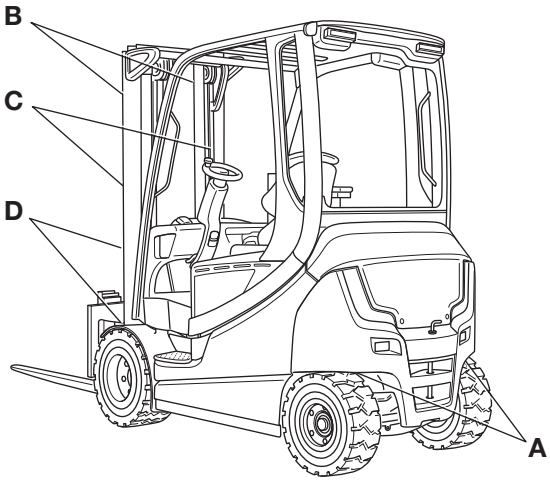


| Code[1] | Lubrication point |
|---|---|
| (A) | Swing axle: four lubricating nipples on each side of the steering axle on the steering arm |
| (B) | Sliding surfaces on the lift mast |
| (C) | Load chains |
| (D) | One lubricating nipple on each of the two lift mast bearings |

[1]The respective lubricant specification can be found in the "Maintenance data table" section below, under this Code.
This lubrication plan describes the series-production truck with standard equipment. For maintenance points on variant trucks, see the relevant chapter and/or instructions provided by the manufacturer.

# Maintenance data table

## General lubrication points

| Code | Unit | Operating materials | Specifications | Dimension |
|---|---|---|---|---|
| | Lubrication | High-pressure grease | ID no. 0147873 | As required |

## Battery

| Code | Unit | Operating materials | Specifications | Dimension |
|---|---|---|---|---|
| | System filling | Distilled water | | As required |
| | Insulation resistance | | DIN 43539<br>VDE 0510 | For further information, refer to the workshop manual for the truck in question. |

## Brake system

| Code | Unit | Operating materials | Specifications | Dimension |
|---|---|---|---|---|
| | System filling | Mineral oil brake fluid | Shell Spirax S4 ATF HDX | Up to the neck of the brake oil reservoir |

## Electrical system

| Code | Unit | Operating materials | Specifications | Dimension |
|---|---|---|---|---|
| | Insulation resistance | | DIN EN 1175<br>VDE 0117 | For further information, refer to the workshop manual for the truck in question. |

## Controls/joints

| Code | Unit | Operating materials | Specifications | Dimension |
|---|---|---|---|---|
| | Lubrication | High-pressure grease | ID no. 0147873 | As required |
| | | Oil | SAE 80<br>MIL-L2105<br>API-GL4 | As required |
| | Dual-pedal operation | High-pressure grease | ID no. 0147873 | As required |

**NOTE**

*When changing to a different type of hydraulic oil, the authorised service centre must adjust the parameters of the truck control unit.*

### Hydraulic system

| Code | Unit | Operating materials | Specifications | Dimension |
|---|---|---|---|---|
| | System filling | Hydraulic oil | HVLP 68<br>DIN 51524, Part 3 | 38.5 l to 50.0 l<br>Dependent on the lift mast and overall height |
| | | Hydraulic oil for the food industry (variant) | NSF H1<br>DIN 51524 | |
| | | Hydraulic oil for cold store application | HVLP 32<br>DIN 51524, Part 3 | |

### Tyres

| Code | Unit | Operating materials | Specifications | Dimension |
|---|---|---|---|---|
| | Superelastic tyres | Wear limit | | To wear mark |
| | Solid rubber tyres | Wear limit | | To wear mark |
| | Pneumatic tyres | Minimum tread depth | | Air pressure: see information on truck<br>Min. tread depth: 1.6 mm |

### Steering axle

| Code | Unit | Operating materials | Specifications | Dimension |
|---|---|---|---|---|
| (A) | Axle stub bearing, spherical bearing | Multi-purpose grease | DIN 51825 KPF2 | As required |
| | Wheel screws | Torque wrench | | For further information, refer to the workshop manual for the truck in question. |

### Drive axle

| Code | Unit | Operating materials | Specifications | Dimension |
|---|---|---|---|---|
| | Wheel screws | Torque wrench | | For further information, refer to the workshop manual for the truck in question. |
| | Wheel gear | Gearbox oil | SAE 80W-90 API-GL4 | For further information, refer to the workshop manual for the truck in question. |

### Lift mast

| Code | Unit | Operating materials | Specifications | Dimension |
|---|---|---|---|---|
| (B) | Lubrication | High-pressure grease | ID no. 0147873 | As required |
| | Stop | Play | | Min. 2 mm |

| Code | Unit | Operating materials | Specifications | Dimension |
|---|---|---|---|---|
| (D) | Lift mast bearing | Grease | Aralub 4320<br>DIN 51825-KPF2N20<br>ID no. 0148659 | Fill with grease until a small amount of fresh grease escapes |
| | Screws for the lift mast bearing | Torque wrench | | For further information, refer to the workshop manual for the truck in question. |

**Load chains**

| Code | Unit | Operating materials | Specifications | Dimension |
|---|---|---|---|---|
| (C) | Lubrication | High-load chain spray | Fully synthetic<br>Temperature range:<br>-35 °C to +250 °C<br>ID no. 0156428 | As required |

**Washer system**

| Code | Unit | Operating materials | Specifications | Dimension |
|---|---|---|---|---|
| | System filling | Screen wash | Winter, ID no. 172566 | As required |

**Air conditioning** (normal cab)

| Code | Unit | Operating materials | Specifications | Dimension |
|---|---|---|---|---|
| | System filling | Refrigerant | R134a | Type carrier and filling quantity: |
| | | | | 6301, 6302, 6305: 944 g |
| | | | | 6304, 6307, 6308, 6309: 1050 g |
| | | | | 6316, 6318: 996 g |
| | | | | 6317, 6319, 6320: 1035 g |
| | System filling | Compressor oil | POE RL68H | 120 ml |

**Air conditioning** (raised cab)

| Code | Unit | Operating materials | Specifications | Dimension |
|---|---|---|---|---|
| | System filling | Refrigerant | R134a | Type carrier and filling quantity: |
| | | | | 6301, 6302, 6305: 1120 g |

| Code | Unit | Operating materials | Specifications | Dimension |
|---|---|---|---|---|
| | | | | 6304, 6307, 6308, 6309: 1140 g |
| | System filling | Compressor oil | POE RL68H | 120 ml |

# Preserving operational readiness

## Lubricating the joints and controls

– Oil or grease bearings and joints according to the "maintenance data table".

- Driver's seat guide
- Cab door hinges (variant)
- Battery-door hinges or battery-cover hinges
- Actuating rod (1) for valves (with multi-lever operation)

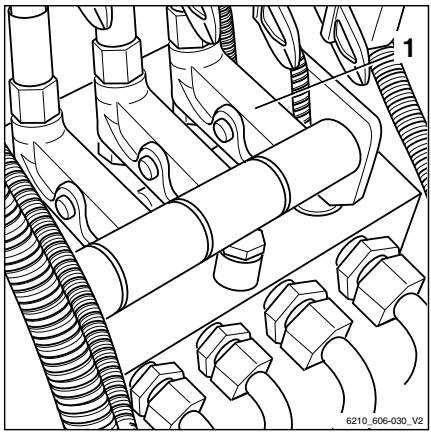


## Checking the battery interlock and the battery door interlock

**DANGER**

**A malfunction of the battery interlock and the battery door interlock can cause the battery door to open and the battery could possibly fall out when the truck is tilted. If the battery falls out, there is a danger of being crushed to death.**

– If the interlock is deformed, damaged or difficult to move, inform the authorised service centre immediately. Do not operate the truck.

– Check that the interlocks function correctly.

– The interlocks must be greased and must move easily.

– Always check the interlock after an accident.

**NOTE**

*The interval for greasing is influenced significantly by the application conditions and the environmental conditions affecting the truck. Visual inspections and function checking of the interlock must be carried out as required and after every 1000 hours. Grease all moving parts of the interlock as necessary.*

– Open the battery door (1).

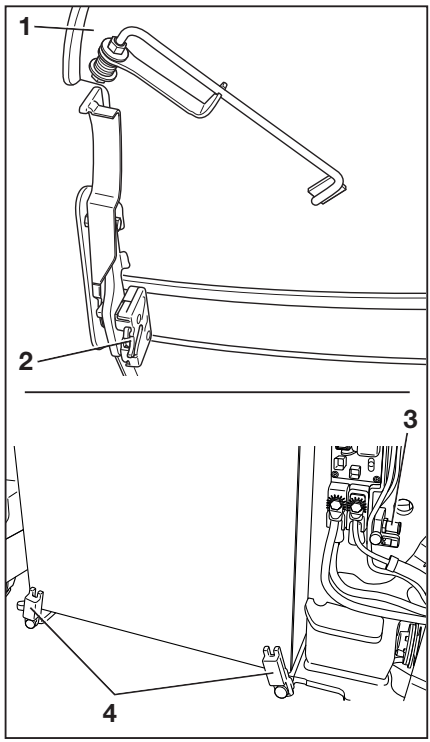

- Check that the door lock (2) and the battery lock (4) move easily and that they are not deformed or damaged.
- Check that the indexing bolt (3) on the door lock is seated correctly and that it is not deformed or damaged.
- Grease the mechanisms of the interlocks.
- Close the battery door again.

## Maintaining the seat belt

**⚠ DANGER**

**There is a risk to life if the seat belt fails during an accident!**

If the seat belt is faulty, it may tear or open during an accident and no longer keep the driver in the driver's seat. The driver may therefore be hurled against the truck components or out of the truck.

- Ensure operational reliability by continually testing.
- Do not use a truck with a defective seat belt.
- Have any defective seat belts replaced by your authorised service centre.
- Only use genuine spare parts.
- Do not make any changes to the seat belt.

**NOTE**

*The checks below must be carried out on a regular basis (monthly). In the case of significant strain, a daily check is necessary.*

## Checking the seat belt

– Pull out the seat belt (3) completely and check for fraying. ▷

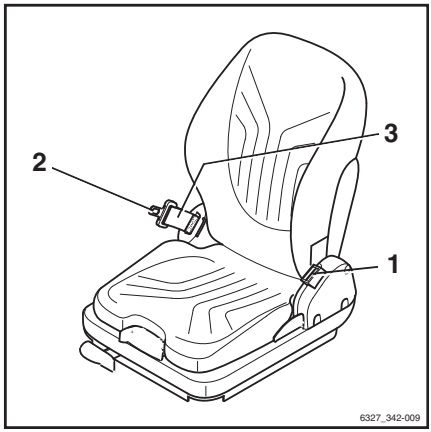


The seat belt must not be frayed or cut. The stitching must not be loose.

– Check that the seat belt is not dirty.

– Check whether parts are worn or damaged (including the fixing points).

– Check that the buckle (1) locks properly. ▷

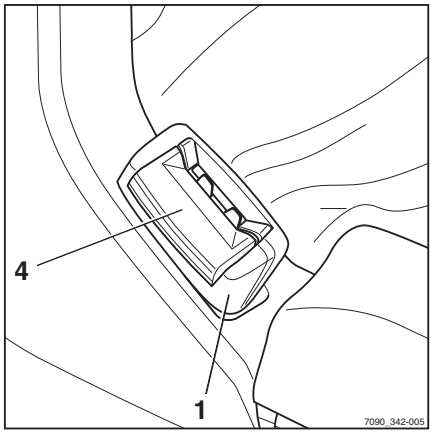


When the belt tongue (2) is inserted, the seat belt must be held securely. The belt tongue (2) must release when the red button (4) is pressed.

– The automatic blocking mechanism must be tested at least once a year:

– Park the truck on level ground.

– Pull out the seat belt using a jerking movement.

The automatic blocking mechanism must block the extension of the belt.

– Tilt the seat at least 30° (if necessary, remove the seat).

– Slowly pull out the seat belt.

The automatic blocking mechanism must block the extension of the belt.

## Cleaning the seat belt

– Clean the seat belt if it is dirty but without using chemical cleaning materials (a brush will suffice).

## Replacing after an accident

The seat belt must always be replaced by the authorised service centre after an accident.

## Checking the driver's seat

▷

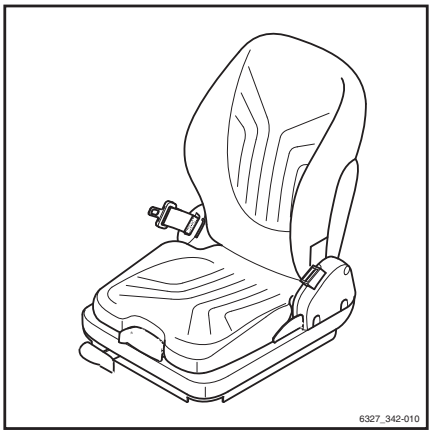


**⚠ WARNING**

Risk of injury!

– After an accident, check the driver's seat with attached restraining belt and fastening.

– Check the controls for correct operation.

– Check the condition of the seat (e.g. wear on the upholstery) and secure fastening to the hood.

**⚠ WARNING**

Risk of injury!

– Have the seat repaired by the service centre if you identify any damage during the checks.

## Servicing the heating system or air conditioning

### Replacing the filter mat

– Loosen the screw (1).

– Remove the cover (2).

▷

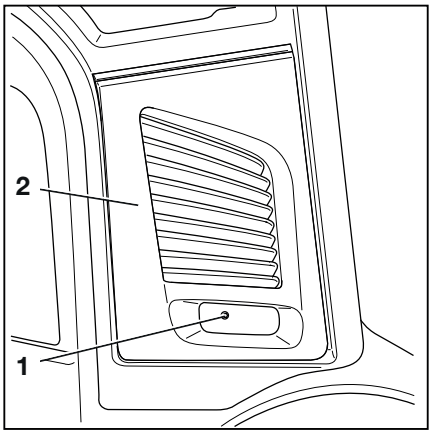

– Check the filter mat (1) for contamination. ▷

– If the filter mat is grey in colour, replace it.

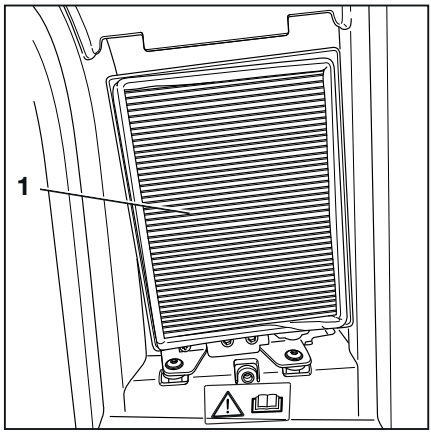


NOTE

*Change the filter mat at least every two months.*

## Cleaning the fresh-air inlet

The fresh-air inlet must be cleaned if the filter mat:

- Is damaged,
- Is incorrectly seated in the filter frame,
- Has not been replaced every two months.

– Remove the filter mat.

– Loosen the screws (1) on the filter frame (2). ▷

– Remove the filter frame (2).

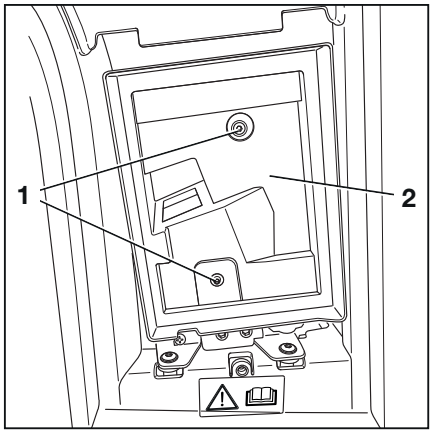

– Remove any dust and dirt from the fresh-air inlet (1) beneath the filter mat carrier. ▷

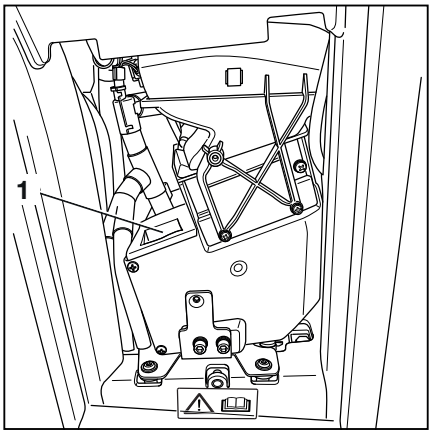

# Servicing wheels and tyres

**⚠ WARNING**

Risk of accident due to uneven tyre wear!

The stability of the truck is reduced in the event of unequal tyre wear. The braking distance increases. The handling characteristics deteriorate.

– Change worn or damaged tyres without delay.

– When changing wheels or tyres, ensure that this does not cause the truck to tilt to one side (e.g. always replace right-hand and left-hand wheels at the same time).

**⚠ WARNING**

Risk of accident due to the use of non-approved wheels.

The quality of the tyres and of the rims affects the stability of the truck. Changes must only be made following consultation with the manufacturer.

Rim parts must never be changed and rim parts from different manufacturers must not be mixed.

– If you wish to use a type of tyre or tyre manufacturer that has not been approved by STILL, obtain approval from STILL prior to use.

– Do not change rim parts and do not mix rim parts from different manufacturers.

## Checking the condition and wear of the tyres

### Superelastic tyres

– Remove any foreign bodies embedded in the tyres (1).

The level of wear exhibited by tyres on the same axle must be approximately the same. Superelastic tyres and solid rubber tyres can be worn down to the "60J wear limit" (2).

If the truck is to be used in winter conditions in areas where the StVZO (German Road Traffic Licensing Regulations) applies, the profile must be at least 4 mm.

Superelastic tyres may then only be operated as far as the "60J wear limit"(2) if their profile is re-cut and at least 4 mm deep.

▷

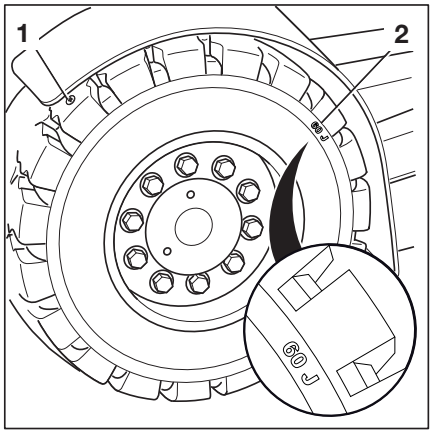

### Pneumatic tyres (variant)

▷

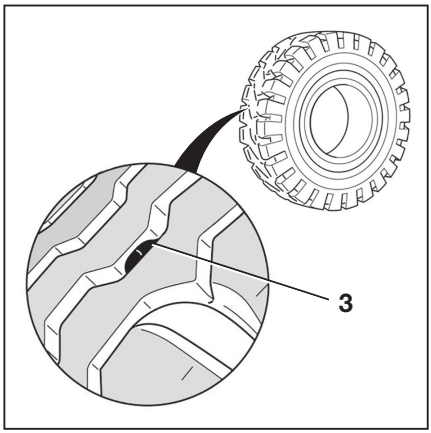


– Check the tread depth on all four tyres.

The tread depth for pneumatic tyres (variant) must be at least 1.6 mm at every point on the tread. If the tread is worn down to the wear mark (2) at any point on the tyre, replace the tyres on one axle.

If the truck is to be used in winter conditions in areas where the StVZO (German Road Traffic Licensing Regulations) applies, the profile must be at least 4 mm.

– Remove any foreign bodies embedded in the tyres.

### Checking the air pressure

NOTE

*The correct air pressure for pneumatic tyres (variant) is determined by the type of tyre used. The air pressure measured must correspond to the manufacturer's information.*

– Observe the air pressure value on the adhesive label on the truck; see the "labelling points".

– Check the air pressure of all four tyres and compare with the air pressure values stated on the adhesive labels.

– Add or release air as required if the air pressure deviates from the values stated.

### Checking wheel fastenings

- Check that the wheel-fastening screws (4) of the drive axle and the steering axle are securely in place and re-tighten as necessary.
- Observe the torques specified in the "maintenance data table".

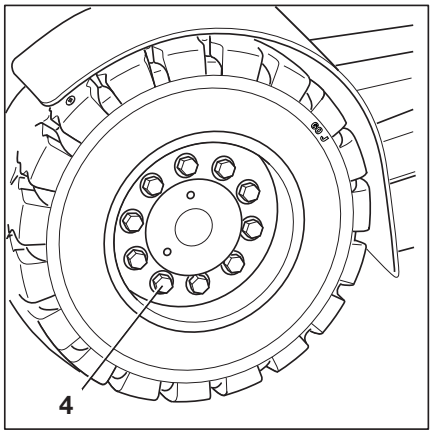


## Servicing the steering axle

- Park the truck securely.
- Check if any of the joints of the steering axle have been knocked out.
- Check the steering axle for bent parts.

### Lubricating the steering axle

**ENVIRONMENT NOTE**

*Dispose of old grease and contaminated devices in accordance with the national regulations for the country in which the truck is being used.*

The joints of the steering axle each have four lubricating nipples per side.

- Apply grease to the lubricating nipples for the steering axle in accordance with the "maintenance data table" until old grease begins to escape.

**WARNING**

Risk of crushing!

Do not actuate the steering during lubrication.

NOTE

*If, after a few strokes, there is no old grease escaping, the steering must be actuated. This makes it easier for grease to escape from the joints.*

– Switch the truck on.
– Actuate the steering.
– Park the truck safely again.
– Repeat the lubrication procedure.

NOTE

*Please note: The more often the truck is cleaned, the more frequently it must be lubricated.*

## Checking the battery

– For information on checking the battery, see the chapter entitled "Checking the battery condition, acid level and acid density".

## Adjusting the warning zone light ▷

– Switch on the truck.
– Make sure that the parking brake is applied.
– Loosen the nuts (2) to adjust each headlight.
– Adjust the headlight (1).

The distance from the light bar to the truck must be between 70...75 cm.

– Re-tighten the nuts (2).

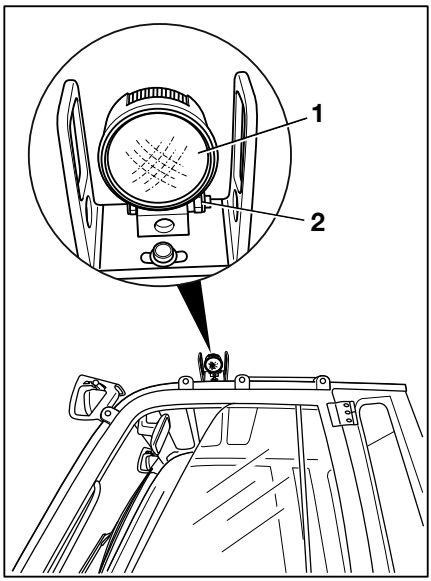

## Replacing the fuses

**DANGER**

**Danger from electrical current!**

High voltages are present in the fuse box. There is a risk of electric shock.

– **Do not** open the fuse box.

– The fuses must be replaced only by the authorised service centre.

## Checking the hydraulic system for leak tightness

**WARNING**

Risk of injury from hydraulic oil under pressure!

Hydraulic oil under pressure can escape from leaking pipes and lines and cause injuries.

– Before checking, release the pressure from the hydraulic system.

– Wear suitable protective gloves, protection goggles etc.

**CAUTION**

Hydraulic hoses become brittle over time!

– Do not store hydraulic hoses for more than two years.

– Do not use hydraulic hoses for more than two years if they are subject to a high level of wear.

– Comply with the specifications of "DGUV Rule 113-020" within Germany.

– Outside of Germany, observe the national regulations for the country of use.

– Check pipe and hose connection screw joints for leaks (traces of oil).

Replace hose lines if they display the following abnormalities:

- Outer layer has been damaged, or is brittle or cracked
- Leakages
- Deformation (e.g. with blisters or kinks)
- A fitting has come loose
- A fitting is badly damaged or corroded

Replace pipes if they display the following abnormalities:

- Abrasion
- Deformation and bending
- Leakages

## Check the hydraulic oil level ▷

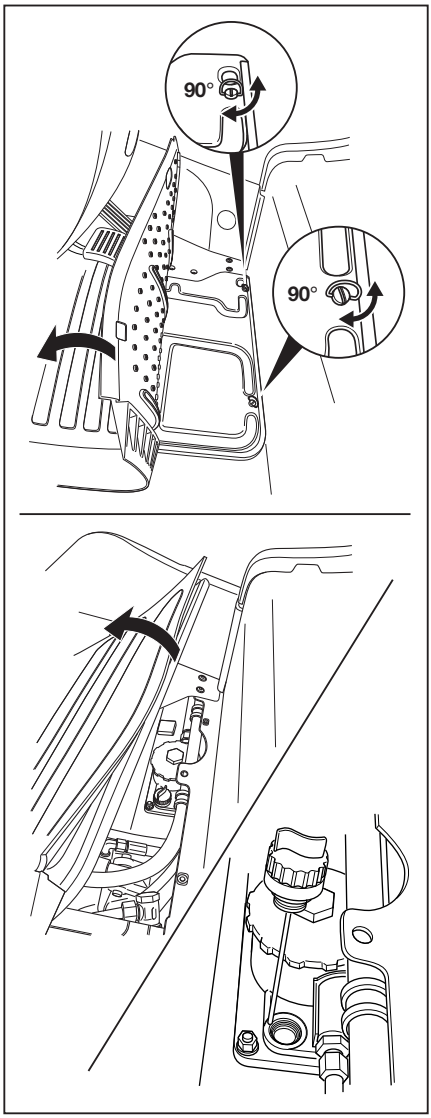


**⚠ WARNING**

Hydraulic oils are hazardous to your health.

– Observe the safety regulations set out in the section entitled "Hydraulic fluid".

**NOTE**

*When changing to a different type of hydraulic oil, the authorised service centre must adjust the parameters of the truck control unit.*

– Park the truck securely on a horizontal surface.

– Tilt the lift mast backwards until it reaches the stop.

– Lower the fork carriage; if attachments are fitted, retract the working cylinders.

**⚠ CAUTION**

Potential for damage to the battery male connector!

If the battery male connector is disconnected while the key switch is on (under load), an arc will be produced. This can lead to erosion at the contacts, which considerably shortens the service life of the contacts.

– Switch off the key switch before disconnecting the battery male connector.

– Do not disconnect the battery male connector while the key switch is switched on, except in an emergency.

– Disconnect the battery male connector.

– Fold up the floor mat.

– Turn the bayonet catches on the bottom plate 90° to the left.

– Fold up the bottom plate with the floor mat and secure it in place.

– Unscrew the breather filter with the dipstick in an anti-clockwise direction.

– Keep the breather filter and dipstick in a horizontal position.

– Check the oil level on the dipstick.

### ENVIRONMENT NOTE

*Carefully collect any spilt hydraulic oil. Dispose of this hydraulic oil in accordance with environmental regulations.*

The marks (1), (2) and (3) indicate the minimum filling levels for the different lift mast versions. ▷

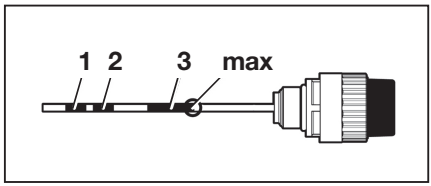


### NOTE

*The optimum hydraulic oil level is between the marks (3) and (max) for all lift mast versions.*

**Assignment of the lift mast version to the mark on the dipstick and the oil filling quantity**

| Marking | Overall height [mm] | | | | | | Oil filling quantity [l] |
|---|---|---|---|---|---|---|---|
| | Telescopic lift mast | | NiHo lift mast | | Triple mast | | |
| | 2.5 t | 3.0 t & 3.5 t | 2.5 t | 3.0 t & 3.5 t | 2.5 t | 3.0 t & 3.5 t | |
| 1 | ≤ 3175 | ≤ 2775 | ≤ 3025 | ≤ 2475 | ≤ 2225 | - | 38.5 |
| 2 | - | 2825 ... 3175 | 3075 ... 3225 | 2525 ... 3225 | 2275 ... 3025 | ≤ 2575 | 45 |
| 3 | - | - | - | - | 3075 ... 3225 | 2625 ... 3225 | 50 |

### ⚠ CAUTION

Risk of damage.

If the hydraulic oil level is too low, the steering is restricted and the pump may be damaged.

– If the oil level is too low, do not use the truck and contact the authorised service centre.

– Screw in the breather filter and the dipstick in a clockwise direction.

– Close the bottom plate again.

– Position the floor mat.

– Connect the battery male connector.

## Lubricating the lift mast and roller track ▷

– Remove dirt and lubricant residue from the roller track.

– Lubricate the roller tracks (1) of the outside, middle, and inside mast with a super-pressure adhesion lubricant to reduce wear. See ⇒Chapter "Maintenance data table", Page 563 .

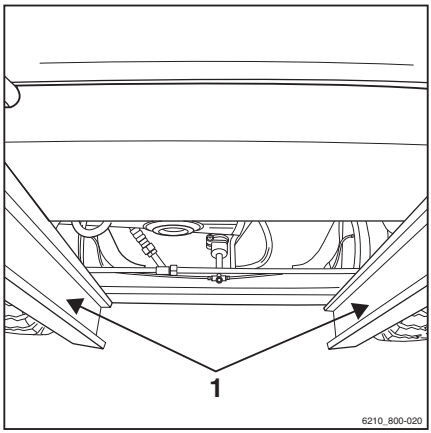


**NOTE**

*Spray the roller track evenly from a distance of approx. 15-20 cm. Wait approx. 15 minutes until the equipment is ready to use again.*

## Preserving operational readiness for cold store application ▷

– On trucks for cold store application (variant), check all rollers and chains in the lift mast for ease of movement once a week.

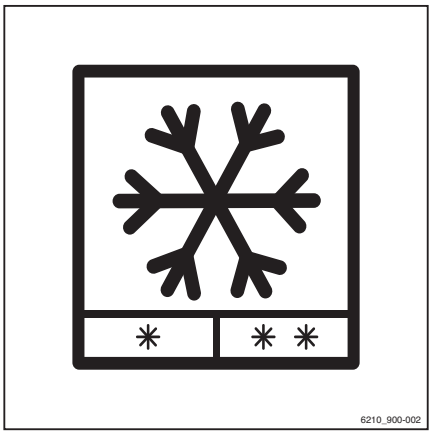

# 1000-hour maintenance/annual maintenance

## Other work that must be carried out

– Perform all tasks required to maintain full operability; see the chapter entitled "Remaining ready for operation".

## Checking the lift cylinders and connections for leaks

▷

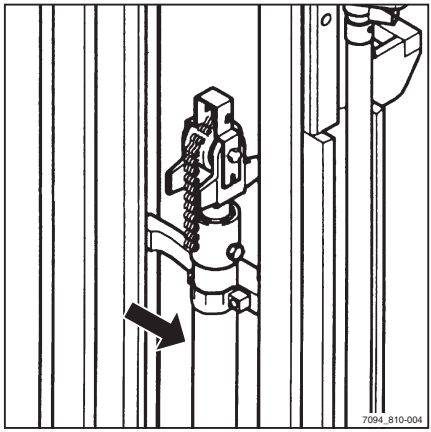


**⚠ WARNING**

Risk of injury

Observe safety regulations for working on the lift mast, see the "Working at the front of the truck" chapter.

– Check hydraulic connections and lift cylinders for leaks (visual inspection).

– Have leaking screw joints or leaking hydraulic cylinders repaired by the authorised service centre.

## Checking the fork arms

▷

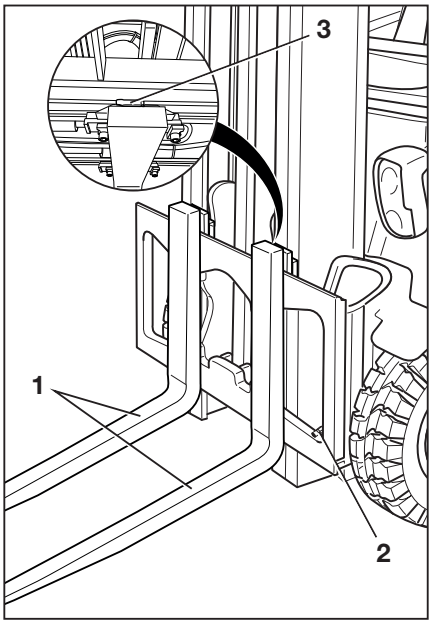


– Check the fork arms (1) for any visible deformation. Wear must not amount to more than 10% of the original thickness.

**⚠ CAUTION**

Risk of component damage!

Always replace worn fork arms in pairs.

– Check that the fork latch (3) is functioning correctly.

– Make sure that the locking screw (2) is present and cannot fall out.

## Checking the reversible fork arms

▷

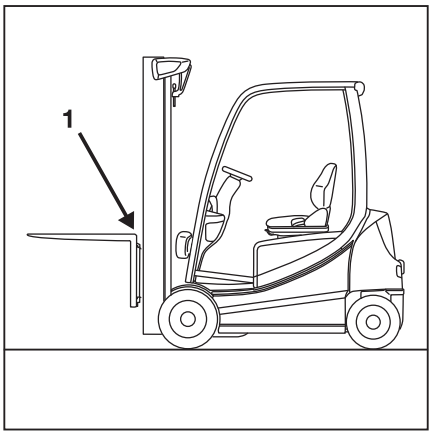


**NOTE**

*This check is only required for reversible fork arms (variant).*

– Check the outside of the fork bend (1) for cracks. Contact your service centre.

## Checking the double pedal

▷

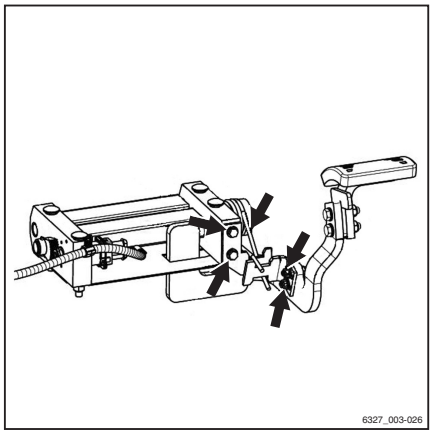


- Remove the floorplate.
- Check that the support and springs of the double pedal mechanism are securely positioned.
- Check that all screws are sealed with locking varnish.

## Checking the battery changeover frame

- The screw joints and welded seams of the battery changeover frame must be subjected to a visual inspection.

# 6

# Technical data

# Ergonomic dimensions

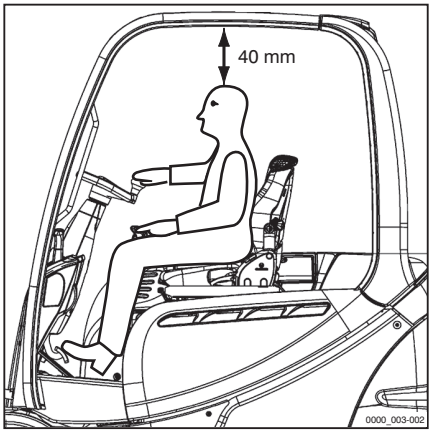


**⚠ WARNING**

Danger of impact injuries to the head!

If the head of the operator is located too close to the underside of the roof, the suspension of the driver's seat or an accident may cause the head to strike the overhead guard.

To avoid head injuries, a minimum distance of **40 mm** must be ensured between the underside of the roof and the head of the tallest operator.

To determine the actual head clearance, the operator must sit in the driver's seat and the seat suspension must be set to this driver's requirements.

Due to the individual nature of height and body weight as well as the wide variety of types of driver's seat and overhead guard, the minimum head clearance must be ensured in every truck.

The driver's compartment has been designed taking ergonomics in the workplace into account and in accordance with EN ISO 3411. In general, from the seat position, the operator has sufficient space to reach the operating devices safely, to operate the truck and to view the outline of the truck. Operators whose body size deviates from the specified dimensions on which EN ISO 3411 is based must be individually considered by the operating company.

# Dimensions

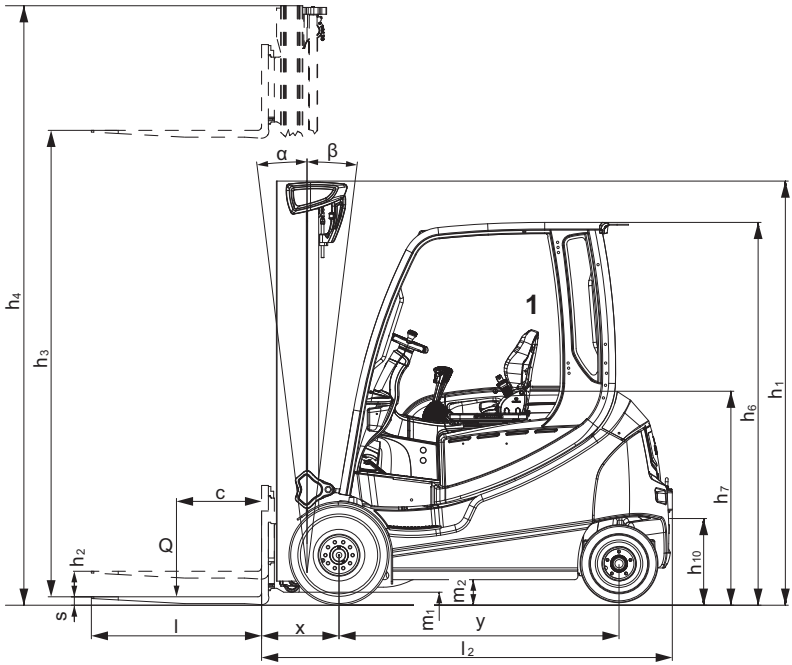


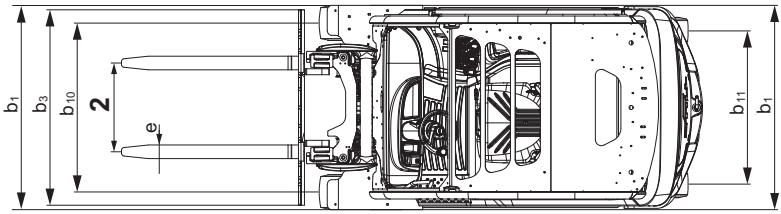


1 Seat is adjustable ± 90 mm

2 Fork spacing is adjustable

NOTE

*Measurements $h_1$, $h_3$, $h_4$, $h_6$ and $b_1$ are customised and can be taken from the order confirmation.*

# VDI datasheet RX60-25, RX60-25/600 and RX60-25L/600

NOTE

*This VDI datasheet specifies only the technical values for trucks with standard equipment. Different tyres, lift masts, additional units etc. can produce different values.*

## Key data

| Model | | RX60-25 | RX60-25/600 | RX60-25L/600 |
|---|---|---|---|---|
| **Type number** | | **6301** | **6302** | **6304** |
| Manufacturer | | STILL GmbH | STILL GmbH | STILL GmbH |
| Drive | | Electric | Electric | Electric |
| Operation | | Seat | Seat | Seat |
| Load capacity/load | Q (kg) | 2500 | 2500 | 2500 |
| Load centre of gravity | c (mm) | 500 | 600 | 600 |
| Load distance | x (mm) | 455 | 460 | 460 |
| Wheelbase | y (mm) | 1645 | 1645 | 1797 |

## Weights

| Model | | RX60-25 | RX60-25/600 | RX60-25L/600 |
|---|---|---|---|---|
| **Type number** | | **6301** | **6302** | **6304** |
| Net weight including battery | kg | 4599 | 4821 | 5019 |
| Front axle load, laden | kg | 6317 | 6421 | 6478 |
| Rear axle load, laden | kg | 782 | 900 | 1041 |
| Front axle load, unladen | kg | 2370 | 2315 | 2508 |
| Rear axle load, unladen | kg | 2229 | 2506 | 2511 |

## Wheels, chassis frame

| Model | | RX60-25 | RX60-25/600 | RX60-25L/600 |
|---|---|---|---|---|
| **Type number** | | **6301** | **6302** | **6304** |
| Tyres | | SE | SE | SE |
| Tyre size, front | | 225/75-10 (23x9-10) | 225/75-10 (23x9-10) | 225/75-10 (23x9-10) |

| Model | | RX60-25 | RX60-25/600 | RX60-25L/600 |
|---|---|---|---|---|
| **Type number** | | **6301** | **6302** | **6304** |
| Tyre size, rear | | 180/70-8 (18x7-8) | 180/70-8 (18x7-8) | 180/70-8 (18x7-8) |
| Number of front wheels (x = driven) | | 2x | 2x | 2x |
| Number of rear wheels (x = driven) | | 2 | 2 | 2 |
| Track width, front | b10 (mm) | 992 | 992 | 992 |
| Track width, rear | b11 (mm) | 900 | 900 | 900 |

## Basic dimensions

| Model | | RX60-25 | RX60-25/600 | RX60-25L/600 |
|---|---|---|---|---|
| **Type number** | | **6301** | **6302** | **6304** |
| Forwards tilt of lift mast/fork carriage | Degrees | 7 | 7 | 7 |
| Backwards tilt of lift mast/fork carriage[1] | Degrees | 7 | 7 | 7 |
| Height with lift mast retracted | h1 (mm) | 2225 | 2225 | 2225 |
| Height with lift mast extended | h4 (mm) | 3700 | 3700 | 3700 |
| Free lift | h2 (mm) | 160 | 160 | 160 |
| Lift[2] | h3 (mm) | 3066 | 3066 | 3066 |
| Height above overhead guard (low variant) | h6 (mm) | 2226 (2135) | 2225 (2135) | 2225 (2135) |
| Seat height in relation to SIP | h7 (mm) | 1235 | 1235 | 1235 |
| Coupling height | h10 (mm) | 484 | 484 | 484 |
| Overall length | l1 (mm) | 3413 | 3618 | 3770 |
| Length including fork back | l2 (mm) | 2413 | 2418 | 2570 |
| Overall width | b1 (mm) | 1200 | 1200 | 1200 |
| Fork arm thickness | s (mm) | 40 | 45 | 45 |
| Fork arm width | e (mm) | 100 | 100 | 100 |
| Fork arm length | l (mm) | 1000 | 1200 | 1200 |
| Fork carriage | Standard; class; form | ISO 2328 II A | ISO 2328 II A | ISO 2328 II A |
| Fork carriage width | b3 (mm) | 1150 | 1150 | 1150 |

1 Applies to telescopic, NiHo and triple masts.

2 The specified nominal lift takes into account the tyre deflection and tolerances of the tyre diameter.

| Model | | RX60-25 | RX60-25/600 | RX60-25L/600 |
|---|---|---|---|---|
| **Type number** | | **6301** | **6302** | **6304** |
| Ground clearance with load below lift mast | m1 (mm) | 116 | 116 | 116 |
| Ground clearance at the middle of the wheelbase | m2 (mm) | 127 | 126 | 126 |
| Aisle width for pallet 1000 x 1200 crosswise[3] | Ast (mm) | 3700 | 3705 | 3905 |
| Aisle width for pallet 800 x 1200 lengthwise[3] | Ast (mm) | 3890 | 3895 | 4116 |
| Turning radius | Wa (mm) | 2035 | 2035 | 2245 |
| Smallest pivot point distance | b13 (mm) | 428 | 428 | 593 |

## Performance data

| Model | | RX60-25 | RX60-25/600 | RX60-25L/600 |
|---|---|---|---|---|
| **Type number** | | **6301** | **6302** | **6304** |
| Driving speed (Blue-Q/Standard/ Sprint) with load | km/h | 18/18/20 | 18/18/20 | 18/18/20 |
| Driving speed (Blue-Q/Standard/Sprint) without load | km/h | 18/18/21 | 18/18/21 | 18/18/21 |
| Lifting speed (Plus performance[4]/ Standard performance) with load | m/s | 0.65/0.56 | 0.65/0.56 | 0.65/0.56 |
| Lifting speed (Plus performance[4]/ Standard performance) without load | m/s | 0.66/0.60 | 0.66/0.60 | 0.66/0.60 |
| Lowering speed with load | m/s | 0.50 | 0.50 | 0.50 |
| Lowering speed without load | m/s | 0.45 | 0.45 | 0.45 |
| Pulling force (Plus performance[4]/ Standard performance)[5] with load | N | 10800/8140 | 10760/8016 | 10720/7985 |
| Pulling force (Plus performance[4]/ Standard performance)[5] without load | N | 10760/8100 | 10670/8110 | 10690/8110 |
| Max. pulling force (Plus performance[4]/Standard performance)[5] with load | N | 21360/17390 | 21340/17370 | 21311/17354 |
| Max. pulling force (Plus performance[4]/Standard performance)[5] without load | N | 18125/17120 | 17636/17073 | 18370/17071 |

3 Does not take the protruding fork arms into consideration.

4 Plus performance = high-performance variant

5 Applies to the overall truck system

| Model | | RX60-25 | RX60-25/600 | RX60-25L/600 |
|---|---|---|---|---|
| **Type number** | | **6301** | **6302** | **6304** |
| Climbing capability (Plus performance[6]/Standard performance)[7] with load | % | 23.5/17.1 | 22.6/16.5 | 22.0/16.0 |
| Climbing capability (Plus performance[6]/Standard performance)[7] without load | % | 29.5/26.6 | 27.4/27.4 | 28.0/24.2 |
| Max. climbing capability (Plus performance[6]/Standard performance)[7] with load | % | 31.9/25.5 | 30.8/24.7 | 30/24 |
| Max. climbing capability (Plus performance[6]/Standard performance)[7] without load | % | 29.5/29.5 | 27.4/27.5 | 28/29.2 |
| Acceleration time over 15 m (Plus performance[6]/Standard performance) with load | s | 5.4/6.5 | 5.4/6.5 | 5.5/6.6 |
| Acceleration time over 15 m (Plus performance[6]/Standard performance) without load | s | 5.0/5.5 | 5.0/5.5 | 5.0/5.6 |
| Service brake | | Hydraulically actuated multi-disc brake | Hydraulically actuated multi-disc brake | Hydraulically actuated multi-disc brake |

## Gradients

The values specified in the "Performance data" table as the maximum climbing capability can be used only to compare the performance of forklift trucks in the same category. The specified values in no way represent the normal daily operating conditions.

**⚠ WARNING**

To use the truck safely – with or without a load – the maximum ascending or descending gradient permitted for travel is 15%.

– If you have any questions, contact your authorised service centre.

6 Plus performance = high-performance variant

7 Applies to the overall truck system

## Electric motor

| Model | | RX60-25 | RX60-25/600 | RX60-25L/600 |
|---|---|---|---|---|
| **Type number** | | **6301** | **6302** | **6304** |
| Traction motor, power at S2 60 min (Plus performance[8]/Standard performance) | kW | 2x10.5/2x8.5 | 2x10.5/2x8.5 | 2x10.5/2x8.5 |
| Lift motor, power at S3 15% (Plus performance[8]/Standard performance) | kW | 25/20 | 25/20 | 25/20 |
| Battery in accordance with DIN 43531/35/36 A, B, C, no | | DIN 43536 A | DIN 43536 A | DIN 43536 A |
| Battery voltage | U (V) | 80 | 80 | 80 |
| Battery capacity | $K_5$ (Ah) | 560 (620) | 560 (620) | 700 (775) |
| Battery weight | kg | 1558 | 1558 | 1863 |
| Energy consumption in accordance with EN 16796 (Plus performance[8]/Standard performance) | kWh/h | 6.0/6.0 | 6.2/6.2 | 6.3/6.3 |

## Other

| Model | | RX60-25 | RX60-25/600 | RX60-25L/600 |
|---|---|---|---|---|
| **Type number** | | **6301** | **6302** | **6304** |
| Handling performance (Plus performance[8]/Standard performance) | t/h | 176/169 | 176/169 | 176/169 |
| Energy consumption for handling performance (Plus performance[8]/ Standard performance) | kWh/h | 7.1/6.6 | 7.2/6.8 | 7.4/6.9 |
| Working pressure for attachments | bar | 250 | 250 | 250 |
| Oil flow for attachments | l/min | 55 | 55 | 55 |
| Sound pressure level $L_{pAZ}$ (driver's compartment)[9] | dB (A) | 70 | 70 | 70 |
| Human vibration: acceleration according to EN 13059 | $m/s^2$ | 0.57 | 0.57 | 0.57 |
| Trailer coupling, DIN type/model | | Bolt | Bolt | Bolt |

8 Plus performance = high-performance variant

9 Without cab. Values are different with a cab.

# VDI datasheet RX60-30, RX60-30/600 and RX60-30L/600

NOTE

*This VDI datasheet specifies only the technical values for trucks with standard equipment. Different tyres, lift masts, additional units etc. can produce different values.*

## Key data

| Model | | RX60-30 | RX60-30/600 | RX60-30L/600 |
|---|---|---|---|---|
| **Type number** | | **6305** | **6307** | **6308** |
| Manufacturer | | STILL GmbH | STILL GmbH | STILL GmbH |
| Drive | | Electric | Electric | Electric |
| Operation | | Seat | Seat | Seat |
| Load capacity/load | Q (kg) | 3000 | 3000 | 3000 |
| Load centre of gravity | c (mm) | 500 | 500 | 600 |
| Load distance | x (mm) | 468 | 468 | 468 |
| Wheelbase | y (mm) | 1652 | 1797 | 1797 |

## Weights

| Model | | RX60-30 | RX60-35 | RX60-30L/600 |
|---|---|---|---|---|
| **Type number** | | **6305** | **6307** | **6308** |
| Net weight including battery | kg | 5040 | 5063 | 5308 |
| Front axle load, laden | kg | 7163 | 7257 | 7419 |
| Rear axle load, laden | kg | 877 | 806 | 889 |
| Front axle load, unladen | kg | 2411 | 2646 | 2641 |
| Rear axle load, unladen | kg | 2629 | 2417 | 2667 |

## Wheels, chassis frame

| Model | | RX60-30 | RX60-35 | RX60-30L/600 |
|---|---|---|---|---|
| **Type number** | | **6305** | **6307** | **6308** |
| Tyres | | SE | SE | SE |
| Tyre size, front | | 250/60-12 (23x10-12) | 250/60-12 (23x10-12) | 315/45-12 |
| Tyre size, rear | | 180/70-8 (18x7-8) | 180/70-8 (18x7-8) | 180/70-8 (18x7-8) |
| Number of front wheels (x = driven) | | 2x | 2x | 2x |
| Number of rear wheels (x = driven) | | 2 | 2 | 2 |
| Track width, front | b10 (mm) | 950 | 950 | 1002 |
| Track width, rear | b11 (mm) | 900 | 900 | 900 |

## Basic dimensions

| Model | | RX60-30 | RX60-35 | RX60-30L/600 |
|---|---|---|---|---|
| **Type number** | | **6305** | **6307** | **6308** |
| Forwards tilt of lift mast/fork carriage | Degrees | 7 | 7 | 7 |
| Backwards tilt of lift mast/fork carriage[10] | Degrees | 7 | 7 | 7 |
| Height with lift mast retracted | h1 (mm) | 2225 | 2225 | 2225 |
| Height with lift mast extended | h4 (mm) | 3850 | 3850 | 3850 |
| Free lift | h2 (mm) | 160 | 160 | 160 |
| Lift[11] | h3 (mm) | 3066 | 3066 | 3066 |
| Height above overhead guard (low variant) | h6 (mm) | 2225 (2135) | 2225 (2135) | 2225 (2135) |
| Seat height in relation to SIP | h7 (mm) | 1235 | 1235 | 1235 |
| Coupling height | h10 (mm) | 484 | 484 | 484 |
| Overall length | l1 (mm) | 3433 | 3578 | 3778 |
| Length including fork back | l2 (mm) | 2433 | 2578 | 2578 |
| Overall width | b1 (mm) | 1200 | 1200 | 1300 |
| Fork arm thickness | s (mm) | 50 | 50 | 50 |
| Fork arm width | e (mm) | 100 | 100 | 100 |

10 Applies to telescopic, NiHo and triple masts.

11 The specified nominal lift takes into account the tyre deflection and tolerances of the tyre diameter.

| Model | | RX60-30 | RX60-35 | RX60-30L/600 |
|---|---|---|---|---|
| **Type number** | | **6305** | **6307** | **6308** |
| Fork arm length | l (mm) | 1000 | 1000 | 1200 |
| Fork carriage | Standard; class; form | ISO 2328 III A | ISO 2328 III A | ISO 2328 III A |
| Fork carriage width | b3 (mm) | 1150 | 1150 | 1150 |
| Ground clearance with load below lift mast | m1 (mm) | 114 | 114 | 116 |
| Ground clearance at the middle of the wheelbase | m2 (mm) | 126 | 125 | 126 |
| Aisle width for pallet 1000 x 1200 crosswise[12] | Ast (mm) | 3742 | 3913 | 3941 |
| Aisle width for pallet 800 x 1200 lengthwise[12] | Ast (mm) | 3940 | 4124 | 4141 |
| Turning radius | Wa (mm) | 2070 | 2245 | 2273 |
| Smallest pivot point distance | b13 (mm) | 491 | 593 | 649 |

## Performance data

| Model | | RX60-30 | RX60-35 | RX60-30L/600 |
|---|---|---|---|---|
| **Type number** | | **6305** | **6307** | **6308** |
| Driving speed (Blue-Q/Standard/Sprint) with load | km/h | 18/18/20 | 18/18/20 | 18/18/20 |
| Driving speed (Blue-Q/Standard/Sprint) without load | km/h | 18/18/21 | 18/18/21 | 18/18/21 |
| Lifting speed (Plus performance[13]/Standard performance) with load | m/s | 0.57/0.49 | 0.57/0.49 | 0.57/0.49 |
| Lifting speed (Plus performance[13]/Standard performance) without load | m/s | 0.57/0.51 | 0.57/0.51 | 0.57/0.51 |
| Lowering speed with load | m/s | 0.50 | 0.50 | 0.50 |
| Lowering speed without load | m/s | 0.43 | 0.43 | 0.43 |
| Pulling force (Plus performance[13]/Standard performance)[14] with load | N | 10430/7740 | 10490/7737 | 10400/7695 |
| Pulling force (Plus performance[13]/Standard performance)[14] without load | N | 10720/8100 | 10730/8106 | 10686/8055 |

12 Does not take the protruding fork arms into consideration.

13 Plus performance = high-performance variant

14 Applies to the overall truck system

| Model | | RX60-30 | RX60-35 | RX60-30L/600 |
|---|---|---|---|---|
| Type number | | 6305 | 6307 | 6308 |
| Max. pulling force (Plus performance[15]/Standard performance)[16] with load | N | 20990/17020 | 20990/17020 | 20960/16990 |
| Max. pulling force (Plus performance[15]/Standard performance)[16] without load | N | 18360/17140 | 20250/17156 | 20160/17117 |
| Climbing capability (Plus performance[15]/Standard performance)[16] with load | % | 20.1/14.6 | 20.1/14.6 | 19.4/14.1 |
| Climbing capability (Plus performance[15]/Standard performance)[16] without load | % | 27.4/24.2 | 30.6/24.1 | 29.1/22.8 |
| Max. climbing capability (Plus performance[15]/Standard performance)[16] with load | % | 27.4/21.9 | 27.3/21.9 | 26.4/21.1 |
| Max. climbing capability (Plus performance[15]/Standard performance)[16] without load | % | 27.4/27.4 | 30.6/30.6 | 29.1/29.1 |
| Acceleration time over 15 m (Plus performance[15]/Standard performance) with load | s | 5.5/6.6 | 5.5/6.6 | 5.7/6.3 |
| Acceleration time over 15 m (Plus performance[15]/Standard performance) without load | s | 5.0/5.6 | 5.0/5.6 | 5.0/5.4 |
| Service brake | | Hydraulically actuated multi-disc brake | Hydraulically actuated multi-disc brake | Hydraulically actuated multi-disc brake |

## Gradients

The values specified in the "Performance data" table as the maximum climbing capability can be used only to compare the performance of forklift trucks in the same category. The specified values in no way represent the normal daily operating conditions.

15 Plus performance = high-performance variant

16 Applies to the overall truck system

**⚠ WARNING**

To use the truck safely – with or without a load – the maximum ascending or descending gradient permitted for travel is 15%.

– If you have any questions, contact your authorised service centre.

## Electric motor

| Model | | RX60-30 | RX60-35 | RX60-30L/600 |
|---|---|---|---|---|
| **Type number** | | **6305** | **6307** | **6308** |
| Traction motor, power at S2 60 min (Plus performance[17]/ Standard performance) | kW | 2x10.5/2x8.5 | 2x10.5/2x8.5 | 2x10.5/2x8.5 |
| Lift motor, power at S3 15% (Plus performance[17]/Standard performance) | kW | 25/20 | 25/20 | 25/20 |
| Battery in accordance with DIN 43531/35/36 A, B, C, no | | DIN 43536 A | DIN 43536 A | DIN 43536 A |
| Battery voltage | U (V) | 80 | 80 | 80 |
| Battery capacity | $K_5$ (Ah) | 560 (620) | 700 (775) | 700 (775) |
| Battery weight | kg | 1558 | 1863 | 1863 |
| Energy consumption in accordance with EN 16796 (Plus performance[17]/Standard performance) | kWh/h | 6.6/6.5 | 6.6/6.6 | 6.7/6.7 |

## Other

| Model | | RX60-30 | RX60-35 | RX60-30L/600 |
|---|---|---|---|---|
| **Type number** | | **6305** | **6307** | **6308** |
| Handling performance (Plus performance[17]/Standard performance) | t/h | 228/222 | 228/222 | 228/222 |
| Energy consumption for handling performance (Plus performance[17]/ Standard performance) | kWh/h | 7.8/7.3 | 7.8/7.3 | 8.0/7.5 |
| Working pressure for attachments | bar | 250 | 250 | 250 |
| Oil flow for attachments | l/min | 55 | 55 | 55 |

17 Plus performance = high-performance variant

| Model | | RX60-30 | RX60-35 | RX60-30L/600 |
|---|---|---|---|---|
| **Type number** | | **6305** | **6307** | **6308** |
| Sound pressure level $L_{pAZ}$ (driver's compartment)[18] | dB (A) | 70 | 70 | 70 |
| Human vibration: acceleration according to EN 13059 | $m/s^2$ | 0.57 | 0.57 | 0.57 |
| Trailer coupling, DIN type/model | | Bolt | Bolt | Bolt |

18 Without cab. Values are different with a cab.

# VDI datasheet RX60-35L

NOTE

*This VDI datasheet specifies only the technical values for trucks with standard equipment. Different tyres, lift masts, additional units etc. can produce different values.*

## Key data

| Model | | RX60-35L |
|---|---|---|
| **Type number** | | **6309** |
| Manufacturer | | STILL GmbH |
| Drive | | Electric |
| Operation | | Seat |
| Load capacity/load | Q (kg) | 3500 |
| Load centre of gravity | c (mm) | 500 |
| Load distance | x (mm) | 468 |
| Wheelbase | y (mm) | 1797 |

## Weights

| Model | | RX60-35L |
|---|---|---|
| **Type number** | | **6309** |
| Net weight including battery | kg | 5500 |
| Front axle load, laden | kg | 8042 |
| Rear axle load, laden | kg | 958 |
| Front axle load, unladen | kg | 2662 |
| Rear axle load, unladen | kg | 2838 |

## Wheels, chassis frame

| Model | | RX60-35L |
|---|---|---|
| **Type number** | | **6309** |
| Tyres | | SE |
| Tyre size, front | | 315/45-12 |
| Tyre size, rear | | 180/70-8<br>(18x7-8) |
| Number of front wheels (x = driven) | | 2x |
| Number of rear wheels (x = driven) | | 2 |

| Model | | RX60-35L |
|---|---|---|
| **Type number** | | **6309** |
| Track width, front | b10 (mm) | 1002 |
| Track width, rear | b11 (mm) | 900 |

## Basic dimensions

| Model | | RX60-35L |
|---|---|---|
| **Type number** | | **6309** |
| Forwards tilt of lift mast/fork carriage | Degrees | 7 |
| Backwards tilt of lift mast/fork carriage[19] | Degrees | 7 |
| Height with lift mast retracted | h1 (mm) | 2225 |
| Height with lift mast extended | h4 (mm) | 3850 |
| Free lift | h2 (mm) | 160 |
| Lift[20] | h3 (mm) | 3066 |
| Height above overhead guard (low variant) | h6 (mm) | 2225 (2135) |
| Seat height in relation to SIP | h7 (mm) | 1235 |
| Coupling height | h10 (mm) | 484 |
| Overall length | l1 (mm) | 3778 |
| Length including fork back | l2 (mm) | 2578 |
| Overall width | b1 (mm) | 1300 |
| Fork arm thickness | s (mm) | 50 |
| Fork arm width | e (mm) | 100 |
| Fork arm length | l (mm) | 1000 |
| Fork carriage | Standard; class; form | ISO 2328 III A |
| Fork carriage width | b3 (mm) | 1150 |
| Ground clearance with load below lift mast | m1 (mm) | 115 |
| Ground clearance at the middle of the wheelbase | m2 (mm) | 126 |
| Aisle width for pallet 1000 x 1200 crosswise[21] | Ast (mm) | 3941 |
| Aisle width for pallet 800 x 1200 lengthwise[21] | Ast (mm) | 4141 |
| Turning radius | Wa (mm) | 2273 |
| Smallest pivot point distance | b13 (mm) | 649 |

19 Applies to telescopic, NiHo and triple masts.

20 The specified nominal lift takes into account the tyre deflection and tolerances of the tyre diameter.

21 Does not take the protruding fork arms into consideration.

## Performance data

| Model | | RX60-35L |
|---|---|---|
| **Type number** | | **6309** |
| Driving speed (Blue-Q/Standard/Sprint) with load | km/h | 18/18/20 |
| Driving speed (Blue-Q/Standard/Sprint) without load | km/h | 18/18/21 |
| Lifting speed (Plus performance[22]/Standard performance) with load | m/s | 0.53/0.44 |
| Lifting speed (Plus performance[22]/Standard performance) without load | m/s | 0.57/0.51 |
| Lowering speed with load | m/s | 0.50 |
| Lowering speed without load | m/s | 0.43 |
| Pulling force (Plus performance[22]/Standard performance)[23][23] with load | N | 10300/7590 |
| Pulling force (Plus performance[22]/Standard performance)[23] without load | N | 10650/8015 |
| Max. pulling force (Plus performance[22]/Standard performance)[23] with load | N | 20900/16920 |
| Max. pulling force (Plus performance[22]/Standard performance)[23] without load | N | 20290/17170 |
| Climbing capability (Plus performance[22]/Standard performance)[23] with load | % | 17.8/12.9 |
| Climbing capability (Plus performance[22]/Standard performance)[23] without load | % | 28.2/21.9 |
| Max. climbing capability (Plus performance[22]/Standard performance)[23] with load | % | 24.2/20.6 |
| Max. climbing capability (Plus performance[22]/Standard performance)[23] without load | % | 28.2/28.2 |
| Acceleration time over 15 m (Plus performance[22]/Standard performance) with load | s | 5.7/6.3 |
| Acceleration time over 15 m (Plus performance[22]/Standard performance) without load | s | 5.0/5.4 |
| Service brake | | Hydraulically actuated multi-disc brake |

## Gradients

The values specified in the "Performance data" table as the maximum climbing capability can be used only to compare the performance of forklift trucks in the same category. The specified values in no way represent the normal daily operating conditions.

22 Plus performance = high-performance variant

23 Applies to the overall truck system

**⚠ WARNING**

To use the truck safely – with or without a load – the maximum ascending or descending gradient permitted for travel is 15%.

– If you have any questions, contact your authorised service centre.

## Electric motor

| Model | | RX60-35L |
|---|---|---|
| **Type number** | | **6309** |
| Traction motor, power at S2 60 min (Plus performance[24]/Standard performance) | kW | 2x10.5/2x8.5 |
| Lift motor, power at S3 15% (Plus performance[24]/Standard performance) | kW | 25/20 |
| Battery in accordance with DIN 43531/35/36 A, B, C, no | Standard; circuit | DIN 43536 A |
| Battery voltage | U (V) | 80 |
| Battery capacity | $K_5$ (Ah) | 700 (775) |
| Battery weight | kg | 1863 |
| Energy consumption in accordance with EN 16796 (Plus performance[24]/Standard performance) | kWh/h | 7.1/7.1 |

## Other

| Model | | RX60-35L |
|---|---|---|
| **Type number** | | **6309** |
| Handling performance (Plus performance[24]/Standard performance) | t/h | 258/245 |
| Energy consumption for handling performance (Plus performance[24]/Standard performance) | kWh/h | 8.6/8.0 |
| Working pressure for attachments | bar | 250 |
| Oil flow for attachments | l/min | 55 |
| Sound pressure level $L_{pAZ}$ (driver's compartment)[25] | dB (A) | 70 |
| Human vibration: acceleration according to EN 13059 | $m/s^2$ | 0.57 |
| Trailer coupling, DIN type/model | | Bolt |

24 Plus performance = high-performance variant

25 Without cab. Values are different with a cab.

# Eco-design requirements for electric motors and variable speed drives

All motors in this industrial truck are exempt from Regulation (EU) 2019/1781 because these motors do not meet the description given in Article 2 "Scope", Item (1) (a) and because of the provisions in Article 2 (2) (h) "Motors in cordless or battery-operated equipment" and Article 2 (2) (o) "Motors designed specifically for the traction of electric vehicles".

All variable speed drives in this industrial truck are exempt from Regulation (EU) 2019/1781 because these variable speed drives do not meet the description given in Article 2 "Scope", Item (1) (b).

# Information about the lead-acid battery

**⚠ CAUTION**

The battery weight and the battery dimensions affect the stability of the truck.

When replacing the battery, the weight ratios must not be changed. The battery weight must remain within the weight range specified on the nameplate. The location of ballast weights must not be changed. The bottom of the battery tray must be closed.

- Use batteries that meet DIN standards.
- Do not change the position of ballast weights.
- Check the battery weight against the information on the nameplate.
- Only use a battery tray that is closed at the bottom.

**NOTE**

*Battery specifications according to DIN 43536; cells in accordance with DIN EN 60254-2, 80-V circuit A*

- The battery weight can be found on the nameplate of the battery.

**Lead-acid batteries**

| Battery designation | Capacity [Ah] | Tray | Weight/ ballast weight [kg] | Battery compartment dimensions [mm] | | | Circuit |
|---|---|---|---|---|---|---|---|
| | | | | Length | Width | Height | |
| 4PzV 400 | 400 | 204 | 234 | 1026 | 708 | 627 | A |
| 4PzS 460 | 460 | | | | | | |
| 4PzS 500 | 500 | | | | | | |
| 5PzV 500 | 500 | 205 | - | | 852 | | |
| 5PzS 575 | 575 | | | | | | |
| 5PzS 625 | 625 | | | | | | |
| 4PzS 560 | 560 | 234 | 234 | 1028 | 711 | 784 | |
| 4PzS 620 | 620 | | | | | | |
| 4PzV 480 | 480 | | | | | | |
| 4TCSM 640 | 640 | | | | | | |
| 4PzV 560 | 560 | | | | | | |
| 5PzS 700 | 700 | 235 | - | | 855 | | |
| 5PzS 775 | 775 | | | | | | |
| 5PzV 600 | 600 | | | | | | |
| 5PzV 700 | 700 | | | | | | |
| 5TCSM 840 | 840 | | | | | | |

## Information about the lead-acid battery

**NOTE**

*To convert to TENSOR® batteries, contact the authorised service centre.*

# Battery specifications for X-Line lithium-ion batteries

**⚠ CAUTION**

The battery weight and the battery dimensions affect the stability of the truck.

When replacing the battery, the weight ratios must not be changed. The battery weight must remain within the weight range specified on the nameplate. The bottom of the battery tray must be closed.

**NOTE**

*Even though this truck has an operating voltage of 80 V, lithium-ion batteries with a nominal voltage of 90 V can be used.*

- Use batteries that meet DIN standards.
- Check the battery weight against the information on the nameplate.
- Only use a battery tray that is closed at the bottom.
- The battery weight can be found on the nameplate of the battery.
- For more information, please refer to the nameplate and the operating instructions for the lithium-ion battery.

**X-Line Li-Ion 80 V (BG 6)**
**83.0 kWh, 31.7 kWh and 52.8 kWh**

| | Battery group 6.3 | Battery group 6.5 | Battery group 6.6 |
|---|---|---|---|
| Nominal voltage [V] | 88.32 | 88.08 | 88.08 |
| Nominal capacity [Ah] | 940 | 360 | 600 |
| Nominal energy [kWh] | 83.0 | 31.7 | 52.8 |
| Length [mm] | 1028 | 1028 | 1028 |
| Width [mm] | 711 | 711 | 711 |
| Height [mm] | 692 | 692 | 692 |
| Weight [kg] | 1558 | 1558 | 1558 |

- Contact the authorised service centre for further technical data.

# Information on the auxiliary hydraulics

The information on the auxiliary hydraulics differs depending on the truck. Take this into consideration when selecting the attachment.

## Information on the auxiliary hydraulics

| | Multi-lever operation | Proportional-valve technology |
|---|---|---|
| Maximum system pressure "$P_{max}$" | 280 bar | 280 bar |
| Maximum volume flow rate "$Q_{max}$" | 50 l/min | 45 l/min |
| Trigger of the switch valve | 12 V / 2 A | 12 V / 2 A |

## A


Access authorisation for the fleet manager. . . . . 129
Changing the fleet manager password. 132
Changing the PIN code for the driver. 129
Access authorisation with PIN code. . . . 128
Changing the PIN codes. . . . . 129
Accessories. . . . . 8
Actuating the drive direction switch
Fingertip version. . . . . 182
Joystick 4Plus version. . . . . 182
Mini-lever version. . . . . 181
Multiple-lever version. . . . . 181
Travel direction selector and indicator module version. . . . . 183
Address of manufacturer. . . . . I
Adjusting the armrest. . . . . 120
Adjusting the fork. . . . . 241
Adjusting the steering column. . . . . 89
Air conditioning. . . . . 408
Assistance systems
Zeroing. . . . . 309
Attachments. . . . . 329
Adjusting the hydraulic speed. . . . . 334
Alternating operation. . . . . 330
Attachment example. . . . . 333
Connection. . . . . 331
Controlling using a double mini-lever. 343
Controlling using a quadruple mini-lever. . . . . 351
Controlling using a triple mini-lever. . 347
Controlling using multi-lever operation. 339
Controlling using the double mini-lever and the 5th function. . . . . 345
Controlling using the joystick 4Plus. . 358
Controlling using the quadruple mini-lever and the 5th function. . . . . 353
Controlling using the triple mini-lever and the 5th function. . . . . 349
Controlling with multi-lever operation and the 5th function. . . . . 341
Controlling with multi-lever operation and the 6th function. . . . . 341
Controlling with the fingertip. . . . . 354
Controlling with the fingertip and the 5th function. . . . . 356
Fitting. . . . . 329
General controlling. . . . . 332
Information on the auxiliary hydraulics. 609
Load capacity. . . . . 331
Mounting. . . . . 331
Picking up a load. . . . . 361
Safety information. . . . . 329
Special risks. . . . . 45
Automatic mast vertical positioning
Calibrating. . . . . 290
Checking for correct function. . . . . 290
Operation. . . . . 288
Automatic tow coupling. . . . . 415
Coupling RO*245. . . . . 419
Uncoupling RO*245. . . . . 420
Auxiliary equipment. . . . . 362


## B


Basic principles for safe operation. . . . . 33
Battery
Battery maintenance indicator. . . . . 490
Changing the battery type. . . . . 510
Changing to lithium-ion batteries. . . . 511
Charging. . . . . 484
Charging to equalise. . . . . 489
Checking. . . . . 576
Checking the changeover frame. . . . . 585
Checking the charging state. . . . . 481
Checking the condition, acid level and acid density. . . . . 480
Checking the interlock. . . . . 567
Disposal. . . . . 28
Information. . . . . 607
Plugs. . . . . 455
Safety regulations. . . . . 475
Servicing. . . . . 479
Battery acid. . . . . 57
Battery door
Checking the interlock. . . . . 567
Battery male connector
Connecting. . . . . 455
Disconnecting. . . . . 456
Battery specifications
Lead-acid battery. . . . . 607
X-Line lithium-ion batteries. . . . . 609
Before picking up a load
Capacity rating plate. . . . . 235

Blue-Q
Configuring. . . . . 170
Effects on additional consumers. . . . . 167
Functional description. . . . . 167
Switching on and off. . . . . 169

## C

Cab. . . . . 398
Opening/closing the 180° door. . . . . 399
Opening/closing the door. . . . . 398
Opening/closing the side window. . . . 403
Operating the rear window heating. . . 365
Turning the interior lighting on or off. . 404
Capacity rating plate. . . . . 235
Ceiling sensor. . . . . 365
Changes to the truck. . . . . 37
Changing the fork arms. . . . . 227
Changing to lithium-ion batteries. . . . . 511
Charging quick access. . . . . 447
Charging the lithium-ion battery. . . . . 504
Checking the brake oil level. . . . . 93
Checking the charge state of the lithium-ion battery. . . . . 502
Checking the charging state. . . . . 481
Checking the double pedal. . . . . 585
Checking the driver's seat. . . . . 570
Checking the emergency off function. . . . 91
Checking the fork arms. . . . . 584
Checking the lift cylinders and connections for leaks. . . . . 583
Checking wheel fastenings. . . . . 575
Circumferential view camera system. . . . 382
Clamp locking mechanism. . . . . 337
Releasing the mechanism with a double mini-lever. . . . . 344
Releasing the mechanism with a quadruple mini-lever. . . . . 352
Releasing the mechanism with a triple mini-lever. . . . . 348
Releasing the mechanism with the fingertip. . . . . 355
Releasing the mechanism with the joystick 4Plus. . . . . 359
Cleaning. . . . . 535
Cleaning the electrical system. . . . . 537
Cleaning the truck. . . . . 535
Cleaning the windows. . . . . 539
Clean the truck
After cleaning. . . . . 539
Climbing into the truck. . . . . 85
Climbing in when the driver's compartment is raised. . . . . 87
Climbing out of the truck. . . . . 85
Climbing out when the driver's compartment is raised. . . . . 87
Clipboard. . . . . 409
Cold store application. . . . . 421
Batteries. . . . . 423
Operation. . . . . 421
Types of application. . . . . 421
Commissioning. . . . . 17
Condition of the roadways. . . . . 176
Conformity marking. . . . . 6
Consumables. . . . . 55
Disposal. . . . . 58
Safety information for handling battery acid. . . . . 57
Safety information for handling oils. . . 55
Safety information for hydraulic fluid. . 56
Contact details. . . . . I
Copyright and trademark rights. . . . . 23
Correct seat position. . . . . 88
Coupling pin in the counterweight. . . . . 413
Crane loading. . . . . 543
Cruise control. . . . . 202
Cup holders. . . . . 67
Curve Speed Control. . . . . 198

## D

Damage. . . . . 40
Danger area. . . . . 241
Danger areas of lithium-ion batteries. . . . . 36
Danger to employees. . . . . 50
Declaration of conformity. . . . . 7
Declaring the use of lithium-ion batteries. . 34
Decommissioning the truck. . . . . 544
Defects. . . . . 40
Definition of directions. . . . . 26
Definition of responsible persons. . . . . 30
Description of the truck. . . . . 2
Dimensions of roadways. . . . . 174
Display-operating unit. . . . . 68
Messages. . . . . 425
Swivelling. . . . . 89

Display/control unit
Main screen. . . . . 122
Disposal
Battery. . . . . 28
Components. . . . . 28
Double mini-lever
Lifting/lowering the fork carriage. 216, 217
Tilting the lift mast. . . . . 216, 218
Drive direction
Changing. . . . . 184
Neutral position. . . . . 180
Selecting. . . . . 180
Selecting with the dual pedal version. 187
Drive modes
Sprint mode. . . . . 170
STILL Classic. . . . . 170
Drive programme
Configuring A/B. . . . . 178
Selecting 1 to 3. . . . . 177
Selecting A/B. . . . . 178
Driver profiles
Creating. . . . . 150
Deleting. . . . . 155
Description. . . . . 148
Renaming. . . . . 152
Selecting. . . . . 148
Driver qualification for using lithium-ion batteries. . . . . 34
Driver rights, duties and rules of behaviour. 31
Drivers. . . . . 31
Driver's cab
Use. . . . . 93
Driving. . . . . 172
Descending gradients. . . . . 256
Gradients. . . . . 256
Driving lights
Switching on and off. . . . . 158
Driving on loading bridges. . . . . 258
Driving onto lifts. . . . . 257
Due date counter for maintenance and safety checks. . . . . 553
Dynamic Load Control 1. . . . . 295
Dynamic Load Control 2. . . . . 296

## E

easy Target. . . . . 263
Configuring. . . . . 264
Defining the lift heights by approaching. . . . . 266
Defining the lift heights by entering them. . . . . 264
Operating. . . . . 267
Placing the load in stock. . . . . 268
Removing the load from stock. . . . . 270
EC declaration of conformity in accordance with the Machinery Directive. . . . . 7
Efficiency and drive modes. . . . . 167
Electrical fork wear protection. . . . . 285
Electric parking brake
Symbols in the display-operating unit. 189
Emergencies
Emergency actuation of the parking brake. . . . . 442
Truck tipping over. . . . . 437
Using the emergency hammer. . . . . 438
Emergency drive direction. . . . . 438
Emergency driving. . . . . 438
Emergency hammer. . . . . 438
Emergency lowering. . . . . 439
Emergency shutdown. . . . . 436
Emissions. . . . . 59
Battery. . . . . 61
Noise emissions. . . . . 59
Radiation. . . . . 61
Vibrations. . . . . 60
Environmental considerations. . . . . 28
Ergonomic dimensions. . . . . 588

## F

Filling the washer system. . . . . 364
Fingertip
Lifting/lowering the fork carriage. . . . . 221
Tilting the lift mast. . . . . 222
Fire extinguisher. . . . . 370
First-aid measures for working with lithium-ion batteries
Maintenance personnel. . . . . 496
Fitting attachments. . . . . 329
FleetManager. . . . . 362
Shock recognition. . . . . 362

Fork arms
Length. . . . . 43
Fork extension. . . . . 229
Fork wear protection. . . . . 226
Function checking. . . . . 82
Function checking of the assistance systems. . . . . 90
Fuses
Replacing. . . . . 577

## G

General. . . . . 5

## H

Handling gas springs and accumulators. . 42
Handling loads. . . . . 235
Hazard assessment. . . . . 34
Hazardous areas. . . . . 177
Hazards and countermeasures. . . . . 48
Hazard warning system
Switching on and off. . . . . 162
Heating system. . . . . 405
High Performance variant. . . . . 509
Hydraulic blocking function. . . . . 233
Hydraulic fluid. . . . . 56
Hydraulic system
Checking for leak tightness. . . . . 577
Checking the oil level. . . . . 580
Depressurising using a double mini-lever. . . . . 317
Depressurising using a quadruple mini-lever. . . . . 321
Depressurising using a triple mini-lever. . . . . 319
Depressurising using multi-lever operation. . . . . 315
Depressurising using multi-lever operation and the 5th and 6th function. . . 316
Depressurising using the double mini-lever and the 5th function. . . . . 318
Depressurising using the fingertip. . . 323
Depressurising using the fingertip and the 5th function. . . . . 324
Depressurising using the Joystick 4Plus. . . . . 325
Depressurising using the Joystick 4Plus and the 5th function. . . . . 326
Depressurising using the quadruple mini-lever and the 5th function. . . . . 322
Depressurising using the triple mini-lever and the 5th function. . . . . 320
Exiting the wizard. . . . . 328
Need to depressurise. . . . . 312
Special feature for clamping attachments. . . . . 327
Wizard for depressurising. . . . . 313

## I

Illustration of lithium-ion batteries. . . . . 499
Improper use. . . . . 18
Information about the documentation. . . . 21
Information for carrying out maintenance. 551
Maintenance timeframe. . . . . 552
Next maintenance interval. . . . . 552
Information on the auxiliary hydraulics. . 609
Insulation testing. . . . . 52
Drive battery test values. . . . . 53
Test values for the truck. . . . . 53
Insurance cover on company premises. . . 33
Intended use. . . . . 17
Interior lighting. . . . . 404

## J

Jacking up. . . . . 549
Joystick 4Plus
Fork carriage sideshift. . . . . 224
Lifting/lowering the fork carriage. . . . . 223
Tilting the lift mast. . . . . 223

## L

Labelling points. . . . . 10
Laser-Smartfork assistance system. . . . . 392
Lashing down. . . . . 542
Li-Ion ready. . . . . 533
Lift height-dependent assistance systems
Electrical fork wear protection. . . . . 285
End lift cut-out. . . . . 277
Lift mast end-stop damping. . . . . 276
Lift transition damping. . . . . 276
Speed reduction when the fork carriage is raised. . . . . 280
Lift height-dependent functions
Intermediate lift cut-out. . . . . 271
Lift height display. . . . . 263

Lift height measuring system. . . . . 259
Cleaning. . . . . 260
Design and function. . . . . 259
Eliminating malfunctions. . . . . 261
Emergency operation in the event of malfunctions. . . . . 262
Lift height preselection
easy Target. . . . . 263
Lifting. . . . . 210, 549
Lifting system
Controlling using a double mini-lever. 215
Controlling using a quadruple mini-lever. . . . . 219
Controlling using a triple mini-lever. . 217
Controlling using the joystick 4Plus. . 222
Controlling with the fingertip. . . . . 221
Dynamics. . . . . 224
Multi-lever. . . . . 213
Operating devices. . . . . 211
Lift mast
Lubricating the roller track. . . . . 582
Removing. . . . . 550
Securing against falling off. . . . . 550
Securing against tilting backwards. . . 550
Lift mast versions. . . . . 210
NiHo lift mast. . . . . 211
Telescopic lift mast. . . . . 210
Triple mast. . . . . 211
Lighting. . . . . 157
Meaning of the symbols. . . . . 157
Retrofitting. . . . . 157
STILL SafetyLight®. . . . . 164
Still Safety Light® 4Plus. . . . . 164
StVZO equipment. . . . . 163
Warning zone light and warning zone light plus. . . . . 165
List of abbreviations. . . . . 24
Lithium-ion batteries
Battery weight and dimensions. . . . . 498
Changing the battery type. . . . . 510
Charging. . . . . 504
Checking the charge state. . . . . 502
Danger areas. . . . . 36
Declaring the use of. . . . . 34
Display. . . . . 70
Driver qualification. . . . . 34
Fire protection measures. . . . . 497
First-aid measures. . . . . 496
Hazard assessment. . . . . 34
Illustration. . . . . 499
Installing. . . . . 514
Maintenance personnel. . . . . 496
Nameplate. . . . . 15
Permissible batteries. . . . . 34
Procedure in the event of a fire. . . . . 34
Product-specific dangers. . . . . 36
Regulations for storing. . . . . 500
Safety regulations. . . . . 496, 498
Special features. . . . . 33
Transport outside the premises. . . . . 35
Lithium-ion battery
Li-Ion ready. . . . . 533
Lithium-ion battery display. . . . . 70
Load
Determining visibility conditions when driving with a load. . . . . 248
Driving. . . . . 249
Picking up. . . . . 244
Setting down. . . . . 254
Load-dependant assistance systems
Load measurement. . . . . 299
Overload detection. . . . . 293
Precision load measurement. . . . . 302
Total load. . . . . 306
Load-dependent assistance systems
Dynamic Load Control 1. . . . . 295
Dynamic Load Control 2. . . . . 296
Tare function. . . . . 304
Load chains
Cleaning. . . . . 538
Load measurement. . . . . 299
Calibrating. . . . . 300
Load programs
Selecting 1 to 3. . . . . 225
Lubricating the joints and controls. . . . . 567

## M

Main display. . . . . 122
Maintenance
General information. . . . . 551
Safety regulations. . . . . 548
Maintenance data table. . . . . 563
Air conditioning (normal cab). . . . . 565
Air conditioning (raised cab). . . . . 565

Battery. . . . . 563
Brake system. . . . . 563
Controls/joints. . . . . 563
Drive axle. . . . . 564
Electrical system. . . . . 563
General lubrication points. . . . . 563
Hydraulic system. . . . . 564
Lift mast. . . . . 564
Load chains. . . . . 565
Steering axle. . . . . 564
Tyres. . . . . 564
Washer system. . . . . 565
Maintenance personnel for batteries. . . . 551
Maintenance work without special qualifications. . . . . 551
Malfunctions during lifting mode. . . . . 232
Malfunctions in the parking brake. . . . . 193
Manual tow coupling
Coupling. . . . . 413
Uncoupling. . . . . 414
Mast tilt angle display. . . . . 288
Medical equipment. . . . . 42
Messages
About operation. . . . . 425
About the truck. . . . . 434
Introduction. . . . . 425
Misuse of safety systems. . . . . 40
Modular camera system. . . . . 387
MSG 65 and MSG 75 driver's seat
Adjusting. . . . . 100
Adjusting the backrest extension. . . . 104
Adjusting the longitudinal horizontal suspension. . . . . 103
Adjusting the lumbar support. . . . . 103
Adjusting the seat backrest. . . . . 101
Adjusting the seat suspension (MSG 65/MSG 75). . . . . 102
Moving. . . . . 101
Switching the seat heater on and off. 104
Swivelling for reverse travel. . . . . 105
MSG 75 E driver's seat
Adjusting. . . . . 106
Adjusting the backrest extension. . . . 108
Adjusting the longitudinal horizontal suspension. . . . . 109
Adjusting the lumbar support. . . . . 108
Adjusting the seat backrest. . . . . 107
Adjusting the seat depth. . . . . 110
Adjusting the seat height. . . . . 109
Moving. . . . . 107
Switching the seat heater and seat air conditioning on and off. . . . . 111
Switching the seat heater on and off. 110
MSG 75 E driver's seat
Adjusting the seat suspension. . . . . 106
MSG 95 driver's seat
Adjusting. . . . . 111
Adjusting the backrest extension. . . . 115
Adjusting the damping of the seat suspension. . . . . 113
Adjusting the longitudinal horizontal suspension. . . . . 114
Adjusting the lumbar support. . . . . 114
Adjusting the seat angle. . . . . 116
Adjusting the seat backrest. . . . . 112
Adjusting the seat depth. . . . . 116
Adjusting to the driver's weight and adjusting the seat height. . . . . 113
Moving. . . . . 112
Switching the seat heater on and off. 115
Multi-lever
Lifting/lowering the fork carriage. . . . . 213
Tilting the lift mast. . . . . 214


## N


Nameplate. . . . . 13
Nameplate of a lithium-ion battery. . . . . 15
Neutral position. . . . . 180


## O


Oils. . . . . 55
On-board charger
Changing the battery type. . . . . 458
Charging characteristic curve. . . . . 460
Charging current limitation. . . . . 462
Charging start time. . . . . 460
Charging the battery. . . . . 463
Compatible batteries. . . . . 473
Configuring. . . . . 459
General. . . . . 457
Maintenance charge. . . . . 462
Performance data. . . . . 474
Regularly testing the electrical safety. . 54
Opening/closing the 180° cab door. . . . . 399
Opening/closing the battery door. . . . . 511

Opening/closing the cab door. . . . . 398
Opening/closing the side window. . . . . 403
Operating
Display-operating unit. . . . . 125
Operating company. . . . . 30
Operating devices and display elements. . 68
Operating devices for hydraulic and driving functions
Double mini-lever. . . . . 72
Fingertip. . . . . 78
Joystick 4Plus. . . . . 79
Multi-lever operation. . . . . 71
Quadruple mini-lever. . . . . 76
Triple mini-lever. . . . . 74
Operating instructions
Issue date. . . . . 23
Operating materials
Quality and quantity. . . . . 560
Operating procedures. . . . . 27
Operating the signal horn. . . . . 92
Operational readiness
Trucks for cold store application. . . . . 582
Ordering spare parts and wearing parts. 560
Overhead guard
Drilling. . . . . 39
Roof loads. . . . . 39
Welding. . . . . 39
Overview
Accessories. . . . . 8
Overviews
Cup holder. . . . . 67
Display-operating unit. . . . . 68
Driver's compartment. . . . . 66
Emergency off switch. . . . . 70
Shelf. . . . . 67
Truck. . . . . 64

## P

Packaging. . . . . 28
Parking. . . . . 207
Parking brake
Actuation. . . . . 189
Actuation when the truck is in motion. 191
Actuation when the truck is stationary. 190
Emergency actuation mechanism. . . 442
Malfunctions. . . . . 193
Parking the vehicle safely. . . . . 194
Parking the truck securely. . . . . 207
Permissible lithium-ion batteries. . . . . 34
Personnel qualifications. . . . . 551
Picking up loads. . . . . 240
Place of use. . . . . 18
Pre-Shift Check
All questions. . . . . 136
Description. . . . . 134
History. . . . . 139
Process. . . . . 135
Question sequence. . . . . 137
Shift start. . . . . 141
Truck restrictions. . . . . 145
Precision load measurement. . . . . 302
Procedure if truck tips over. . . . . 437
Procedure in emergencies. . . . . 436
Procedure in the event of a fire when using lithium-ion batteries. . . . . 34
Product-specific dangers of lithium-ion batteries. . . . . 36
Prohibition of use by unauthorised persons. 32
Push-up roof window. . . . . 409

## Q

Quadruple mini-lever
Lifting/lowering the fork carriage. . . . . 219
Tilting the lift mast. . . . . 220

## R

Radio. . . . . 404
Rear window heating
Switching on and off. . . . . 365
Reducing speed when turning. . . . . 198
Regular inspections. . . . . 52
Regulations for storing lithium-ion batteries. . . . . 500
Replacing the battery
General information. . . . . 509
High Performance variant. . . . . 509
Lithium-ion battery. . . . . 514
Using a change frame. . . . . 519
Using an electric battery carrier. . . . . 525
Using a truck. . . . . 514
Residual dangers. . . . . 44
Residual risk. . . . . 44
Residual risks. . . . . 44
Retrofitting. . . . . 37
Retrofitting lighting equipment. . . . . 157

Reversible fork arms. . . . . 231
Checking. . . . . 584
Roadways. . . . . 174, 176, 177
Aisle widths. . . . . 174
Ascending gradients. . . . . 175
Components protruding beyond the truck contour. . . . . 176
Descending gradients. . . . . 175
Rotating beacon
Switching on and off. . . . . 164
Rules for roadways and the working area. 176
Run-on time for additional devices. . . . . 370

## S

Safety devices. . . . . 549
Safety inspection. . . . . 52
Safety regulations for handling consumables. . . . . 55
Safety regulations for handling lithium-ion batteries. . . . . 496
Battery weight and dimensions. . . . . 498
Fire protection measures. . . . . 497
Maintenance personnel. . . . . 496
Safety regulations for handling the battery. . . . . 475
Battery weight and dimensions. . . . . 477
Damage to cables and battery male connectors. . . . . 478
Fire protection measures. . . . . 476
Maintenance personnel. . . . . 475
Performing battery maintenance. . . . 478
Safety regulations for maintenance
General information. . . . . 548
Safety devices. . . . . 549
Set values. . . . . 549
Working on the electrical equipment. 548
Working on the hydraulic equipment. 548
Safety regulations for working on the lift mast. . . . . 550
Safety regulations for working with lithium-ion batteries. . . . . 498
Safety regulations when driving. . . . . 172
Safety regulations when handing loads. . 235
Safety tests. . . . . 52
Schematic views. . . . . 27
Scope of the documentation. . . . . 21
CO solutions. . . . . 22
Seat belt. . . . . 117
Checking. . . . . 569
Cleaning. . . . . 569
Fastening. . . . . 117
Fastening on a steep slope. . . . . 119
Maintaining. . . . . 568
Malfunction due to cold. . . . . 120
Replacing after an accident. . . . . 569
Unlocking. . . . . 119
Serial number. . . . . 14
Service brake
Actuating. . . . . 187
Servicing the heating system or air conditioning. . . . . 570
Cleaning the fresh-air inlet. . . . . 571
Replacing the filter mat. . . . . 570
Set values. . . . . 549
Shake function. . . . . 250
Double mini-lever. . . . . 253
Fingertip switch. . . . . 254
Joystick 4Plus. . . . . 252
Quadruple mini-lever. . . . . 253
Triple mini-lever. . . . . 253
Shelf. . . . . 67
Shock recognition. . . . . 362
Signal terms. . . . . 24
Spare parts list. . . . . II
Special risks. . . . . 45
Speed reduction when the cab door is open. . . . . 199
Speed restriction
Configuring. . . . . 200
Switching on and off. . . . . 200
Sprint mode
Automatic switch-off. . . . . 171
Switching on and off. . . . . 171
Stability. . . . . 45
Starting drive mode. . . . . 183
Dual pedal version. . . . . 185
Steering. . . . . 197
Steering axle
Lubricating. . . . . 575
Servicing. . . . . 575
Steering system
Checking for correct function. . . . . 99
Storing the truck. . . . . 544

StVZO (Road Traffic Licensing Regulations) information. . . . . 15
Sun blind. . . . . 411
Sun visor. . . . . 411
Switching off the truck. . . . . 207
Switching on
using the key switch. . . . . 122
via the push button. . . . . 123

## T

Tare function. . . . . 304
Technical data
Dimensions. . . . . 589
Tilt-angle-dependent assistance systems
Automatic mast vertical positioning. . 288
Tilt angle-dependent assistance systems
Mast tilt angle display. . . . . 288
Tilt end stop damping. . . . . 288
Tilt end stop damping. . . . . 288
Total load. . . . . 306
Tow coupling RO*244
Closing. . . . . 418
Coupling. . . . . 417
Uncoupling. . . . . 418
Towed load. . . . . 412
Towing
Procedure. . . . . 445
Proper use. . . . . 17
Safety information. . . . . 444
Trailer operation. . . . . 412
Trailers
Towing. . . . . 420
Transport. . . . . 540
Transporting pallets. . . . . 242
Transporting suspended loads. . . . . 243
Transporting the battery by crane
Lead-acid battery. . . . . 530
Lithium-ion battery. . . . . 531
Transporting the lithium-ion battery. . . . . 35
Travel direction selector and indicator module. . . . . 80
Turn indicators
Switching on and off. . . . . 160
Tyres
Safety principles. . . . . 40

## U

Unlock the emergency off switch. . . . . 91
Use after storage or decommissioning. . 546
Using the truck. . . . . 17
Using working platforms. . . . . 20

## V

Variant
Ceiling sensor. . . . . 365
Variants
180° cab door. . . . . 399
Access authorisation for the fleet manager. . . . . 129
Access authorisation with PIN code. . 128
Air conditioning. . . . . 408
Automatic mast vertical positioning. . 288, 290
Battery maintenance indicator. . . . . 490
Blue-Q. . . . . 167
Charging quick access. . . . . 447
Circumferential view camera system. 382
Clamp locking mechanism. . . . . 337
Clipboard. . . . . 409
Cruise control. . . . . 202
Driver profiles. . . . . 148
Dynamic Load Control 1. . . . . 295
Dynamic Load Control 2. . . . . 296
easy Target. . . . . 263
Electrical fork wear protection. . . . . 285
End lift cut-out. . . . . 277
Fire extinguisher. . . . . 370
FleetManager. . . . . 362
Fork extension. . . . . 229
Fork wear protection. . . . . 226
Heating system. . . . . 405
Interior lighting. . . . . 404
Intermediate lift cut-out. . . . . 271
Laser-Smartfork assistance system. . 392
Lift height display. . . . . 263
Lifting systems. . . . . 210
Lift mast end-stop damping. . . . . 276
Lift transition damping. . . . . 276
Load measurement. . . . . 299
Mast tilt angle display. . . . . 288
Modular camera system. . . . . 387
NiHo lift mast. . . . . 211
On-board charger. . . . . 457

Optical lift height measuring system. . 259
Overload detection. . . . . 293
Pre-Shift Check. . . . . 134
Precision load measurement. . . . . 302
Push-up roof window. . . . . 409
Radio. . . . . 404
Reversible fork arms. . . . . 231
Shake function. . . . . 250
Shock recognition. . . . . 362
Speed reduction when the fork carriage is raised. . . . . 280
Speed restriction. . . . . 200
STILL SafetyLight® and STILL Safety-Light 4Plus®. . . . . 164
Sun blind. . . . . 411
Sun visor. . . . . 411
Switching on via the push button (variant). . . . . 123
Tare function. . . . . 304
Tilt end stop damping. . . . . 288
Total load. . . . . 306
Travel direction selector and indicator module. . . . . 80
Triple mast. . . . . 211
Warning zone light and warning zone light plus. . . . . 165
Wheel chock. . . . . 209
Windscreen wipers and washers. . . . 362
VDI datasheet
RX60-25. . . . . 591
RX60-25/600. . . . . 591
RX60-25L/600. . . . . 591
RX60-30. . . . . 596
RX60-30/600. . . . . 596
RX60-30L/600. . . . . 596
RX60-35L. . . . . 602
View of functions and operating procedures. . . . . 27
View of operating procedures. . . . . 27
Views of the display and operating unit. . . 27
Visibility when driving with a load. . . . . 248
Visual inspections. . . . . 82

## W

Warming up the hydraulic oil. . . . . 98
Warning regarding non-original parts. . . . 39
Warning zone light
Adjusting. . . . . 576
Wedging the wheels. . . . . 541
Wheel chock. . . . . 209
Wheels and tyres
Checking the air pressure. . . . . 574
Checking the condition and wear of the tyres. . . . . 573
Checking wheel fastenings. . . . . 575
Servicing. . . . . 573
Usage in winter weather conditions. . 573
Windscreen wipers and washers
Switching on and off. . . . . 362
Winter tyres. . . . . 573
Working at the front of the truck. . . . . 550
Working on the electrical equipment. . . . 548
Working on the hydraulic equipment. . . . 548
Working spotlight for reverse travel
Switching on and off. . . . . 160
Working spotlights
Switching on and off. . . . . 159

## Y

Your truck. . . . . 2

## Z

Zeroing the assistance systems. . . . . 309