Original instructions

Diesel truck

RX70-40
RX70-45
RX70-50

7331 7332 7333 7334

first in intralogistics

57348011825 EN - 07/2023 - 14

Address of manufacturer and contact details ▷

STILL GmbH
Berzeliusstraße 10
22113 Hamburg, Germany
Tel. +49 (0) 40 7339-0
Fax: +49 (0) 40 7339-1622
Email: info@still.de
Website: http://www.still.de

Spare parts list ▷

You can request to download the spare parts list by copying and pasting the address **https://sparepartlist.still.eu** into a web browser or by scanning the QR code shown to the side.

On the web page, enter the following password: **Spareparts24!**

On the next screen, enter your email address and truck serial number to receive an email with the link and download the spare parts list.

2511

Rules for the operating company of industrial trucks

In addition to these operating instructions, a code of practice containing additional information for the operating companies of industrial trucks is also available.

This guide provides information for handling industrial trucks:

- Information on how to select suitable industrial trucks for a particular area of application
- Prerequisites for the safe operation of industrial trucks
- Information on the use of industrial trucks
- Information on transport, initial commissioning and storage of industrial trucks

Internet address and QR code

The information can be accessed at any time by pasting the address **https://m.still.de/vdma** in a web browser or by scanning the QR code.

1 Foreword

Your truck . . . 2
Description of the truck . . . 2
General . . . 4
Conformity marking . . . 5
Declaration that reflects the content of the declaration of conformity . . . 6
Accessories overview . . . 7
Labelling points overview . . . 8
Nameplate . . . 9
Serial number . . . 9
StVZO (Road Traffic Licensing Regulations) information . . . 10

Using the truck . . . 11
Intended use . . . 11
Proper use during towing . . . 11
Improper use . . . 11
Place of use . . . 12
Using working platforms . . . 13

Information about the documentation . . . 14
Documentation scope . . . 14
Supplementary documentation . . . 15
Issue date and topicality of the operating instructions . . . 16
Copyright and trademark rights . . . 16
Explanation of signal terms used . . . 17
List of abbreviations . . . 17
Definition of directions . . . 19
Schematic views . . . 20

Environmental considerations . . . 21
Packaging . . . 21
Disposal of components and batteries . . . 21

2 Safety

Definition of terms used for responsible persons . . . 24
Operating company . . . 24
Specialist . . . 24
Drivers . . . 25

Basic principles for safe operation . . . 27
Insurance cover on company premises . . . 27
Modifications and retrofitting . . . 27
Changes to the overhead guard and roof loads . . . 28
Warning about any manipulation of the internal combustion engine . . . 29

Warning regarding non-original parts . . . 29
Damage, defects and misuse of safety systems . . . 30
Length of the fork arms . . . 30
Tyres . . . 31
Medical equipment . . . 32
Exercise caution when handling gas springs and accumulators . . . 32
Length of the fork arms . . . 30

Residual risk . . . 34
Residual dangers, residual risks . . . 34
Special risks associated with using the truck and attachments . . . 35
Overview of hazards and countermeasures . . . 38
Danger to employees . . . 40

Safety tests . . . 42
Regular safety inspection of the truck . . . 42
Checking the diesel engine emissions . . . 42
Trucks with particle filters . . . 43
Insulation testing . . . 44

Safety regulations for handling consumables . . . 45
Permissible consumables . . . 45
Oils . . . 45
Hydraulic fluid . . . 46
Battery acid . . . 47
Diesel fuel . . . 48
Coolant and cooling fluid . . . 50
Disposal of consumables . . . 50

Emissions . . . 52

3 Overviews

Truck overview . . . 56

Overview of driver's compartment . . . 57

Operating devices and display elements . . . 58
Display and operating unit . . . 58
Operating devices for hydraulic and driving functions . . . 59
Double mini-lever . . . 60
Triple mini-lever . . . 61
Quadruple mini-lever . . . 62
Joystick 4Plus . . . 63
Fingertip . . . 64
Travel direction selector and indicator module (variant) . . . 65

4 Operation

Checks and tasks before daily use 68
Visual inspections and function checking 68
Climbing into and out of the truck 71
Climbing into and out of a truck with a raised driver's cab 72
Checking the side cover is locked 74
Shelves and cup holders 74
Adjusting the MSG 65/MSG 75 driver's seat 75
Adjusting the armrest. 80
Adjusting the steering column 81
Unlocking the emergency off switch 81
Access authorisation with PIN code (variant) 82
Operating the signal horn 92
Seat belt 92
Using the driver's cab 95
Checking the brake system for correct function 95
Checking the steering system for correct function. 98
Checking the emergency off function 98
Zero adjustment of the load measurement (variant) 99
Checking the vertical lift mast position (variant) for correct function 101
Cleaning the dust valve 101

Operating the display-operating unit 102
Displays 102
Adjusting the displays 103
Symbols in the display. 104
Setting the date or time 109
Resetting the daily kilometres and daily operating hours 109
Setting the language 110
Softkeys for operating various equipment variants 110
Configuring Blue-Q efficiency mode 111
Shock recognition (variant) 112
Additional settings 112

Switching on and starting. 113
Switching on the key switch. 113
Starting the engine 115

Lighting 117
Switching the lighting on and off 117
Switching the working spotlight for reverse travel on and off 118
Switching the turn indicators on and off. 118
Switching the hazard warning system on and off 119
Switching the rotating beacon on and off 120

Switching the double working spotlights on and off. 120
STILL SafetyLight (variant) 122

Blue-Q efficiency mode 124
Functional description 124
Switching off additional consumers 125
Switching efficiency mode Blue-Q on and off 126

Driving 127
Safety regulations when driving. 127
Roadways 129
Setting the drive programmes 131
Actuating the vertical rocker button for the "drive direction", Joystick 4Plus version. . . . 132
Actuating the drive direction switch with the mini-lever version. 133
Actuating the drive direction switch with the Fingertip version 133
Actuating the drive direction selection lever with the travel direction selector and indicator module version 134
Starting to drive 134
Starting drive mode, dual pedal version (variant) 136
Operating the service brake 138
Actuating the mechanical parking brake 140
Steering 142
Driving on ascending and descending gradients. 143
Reducing speed with a raised load (variant) 144
Automatic shut-off of the internal combustion engine (variant) 144

Parking. 145
Parking the truck securely and switching it off. 145
Wheel chock (variant) 146

Lifting 147
Lifting system variants 147
Automatic lift cut out (variant) 147
Automatic mast vertical positioning (variant) 148
Types of lift mast 152
Malfunctions during lifting mode 153
Hydraulic blocking function 154
Lifting system operating devices 155
Controlling the lifting system using a double mini-lever. 156
Controlling the lifting system using a triple mini-lever 158
Controlling the lifting system using a quadruple mini-lever 160
Controlling the lifting system using the Joystick 4Plus 161
Controlling the lifting system using the Fingertip 160
Fork wear protection (variant) 165
Changing the fork arms 166

Fork extension (variant) . . . 168
Operation with reversible fork arms (variant) . . . 170

Handling loads . . . 172
Safety regulations when handing loads . . . 172
Capacity rating plate . . . 172
Load measurement (variant) . . . 177
Picking up loads . . . 179
Danger area . . . 180
Transporting pallets . . . 181
Transporting suspended loads . . . 182
Load pick up . . . 183
Transporting loads . . . 187
Setting down loads . . . 189
Driving on lifts . . . 191
Driving on loading bridges . . . 192

Particle filter system . . . 193
Particle filter - Function . . . 193
Particle filter - Performing parked regeneration . . . 195
Particle filter - Displays . . . 199

Attachments . . . 201
Fitting attachments . . . 201
Releasing the pressure from the hydraulic system . . . 203
General instructions for controlling attachments . . . 205
Controlling attachments using a double mini-lever . . . 207
Controlling attachments using the double mini-lever and the 5th function . . . 209
Controlling attachments using a triple mini-lever . . . 211
Controlling attachments using the triple mini-lever and the 5th function . . . 213
Controlling attachments using a quadruple mini-lever . . . 214
Controlling attachments using the quadruple mini-lever and the 5th function . . . 217
Controlling attachments using the Joystick 4Plus . . . 219
Controlling attachments using the Joystick 4Plus and the 5th function . . . 221
Controlling attachments using the Fingertip . . . 222
Controlling attachments using the Fingertip and the 5th function . . . 224
Clamp locking mechanism (variant) . . . 225
Picking up a load using attachments . . . 226

Auxiliary equipment . . . 227
Operating the windscreen wiper/washer . . . 227
Filling the washer system . . . 227
FleetManager (variant) . . . 228
Shock recognition (variant) . . . 112
Cruise control (variant) . . . 228

Driver restraint systems (variants) . . . 232
Ceiling sensor (variant) . . . 232

Cab . . . 238
Opening the cab door . . . 238
Closing the cab door . . . 239
Opening the side windows . . . 239
Closing the side windows . . . 240
Operating the interior lighting . . . 241
Operating the rear window heating . . . 242
Radio (variant) . . . 242
Heating system (variant) . . . 243
Air conditioning (variant) . . . 244

Trailer operation . . . 245
Towed load . . . 245
Coupling pin in the counterweight . . . 246
Automatic tow coupling . . . 248
Towing trailers . . . 256

Display messages . . . 258
Display content . . . 258
Error code table . . . 259
General messages . . . 261
Drive-specific messages . . . 271

Refuelling . . . 278
Diesel fuel - Specifications . . . 278
Filling up with diesel fuel . . . 281

Procedure in emergencies . . . 283
Emergency shutdown . . . 283
Procedure if truck tips over . . . 285
Emergency hammer . . . 285
Emergency driving via the drive direction switch/drive direction selection lever . . . 286
Emergency lowering . . . 288
Disconnecting the battery . . . 290
Jump-starting . . . 291
Towing . . . 292

Transporting the truck . . . 294
Transport . . . 294
Crane loading . . . 296

Cleaning . . . 300
Clean the truck . . . 300
Cleaning the electrical system . . . 302

Cleaning load chains . . . 302
Cleaning the windows . . . 303
After washing . . . 303

Decommissioning . . . 304
Shutting down and storing the truck . . . 304
Recommissioning after decommissioning . . . 305

5 Maintenance

Safety regulations for maintenance . . . 308
General information . . . 308
Working on the hydraulic equipment . . . 308
Working on the electrical equipment . . . 307
Working on the ignition system . . . 309
Safety devices . . . 310
Set values . . . 310
Lifting and jacking up . . . 310
Working at the front of the truck . . . 310

General maintenance information . . . 312
Personnel qualifications . . . 312
Information for carrying out maintenance . . . 312
Maintenance — 1000 hours/annually . . . 315
Maintenance - 3000 hours/every two years . . . 319
Ordering spare parts and wearing parts . . . 319
Quality and quantity of the required operating materials . . . 320
Lubrication plan . . . 321
Maintenance data table . . . 322

Providing access to maintenance points . . . 325
Opening the side service flap . . . 325
Closing the side service flap . . . 326
Opening the bonnet . . . 326
Closing the bonnet . . . 328
Installing and removing the bottom plate . . . 329

Preserving operational readiness . . . 332
Checking the engine oil level . . . 332
Topping up the coolant and checking the concentration of the coolant additive . . . 332
Cleaning the radiator, checking for leaks . . . 335
Replacing the air filter cartridges . . . 335
Draining water from the fuel filter . . . 337
Lubricating the joints and controls . . . 338
Checking the door latch . . . 339
Maintaining the seat belt . . . 339

Checking the driver's seat 341
Greasing the automatic tow coupling 341
Servicing wheels and tyres 344
Servicing the battery 346
Replacing fuses 348
Lubricating the lift mast and roller track 349

1000-hour maintenance/annual maintenance 351
Other work that must be carried out 351
Checking the hydraulic oil level 351
Checking the hydraulic system for leak tightness 352
Checking the lift cylinders and connections for leaks 353
Checking the fork arms 354
Checking the reversible fork arms 354

6 Technical data

Dimensions 356

VDI datasheet 358

Wheels and tyres 361

Fuse assignment 364

1

Foreword

Your truck

Description of the truck

General

The trucks in the RX70-40/45/50 series with a load capacity of up to 5 t are equipped with an internal combustion engine/electric drive. This drive combines the advantages of the internal combustion engine with the precise control of an electric drive. The maximum speed is 22 km/h (without load).

The drive is suitable for outdoor use and also for use in well-ventilated halls in conjunction with a particle filter.

The bend-resistant and warp-resistant lift mast enables safe load handling, even with heavy loads. The comfortable driver's compartment features the most up-to-date ergonomic design to prevent signs of fatigue and increase safety.

The truck supports all functions of FleetManager 4.0.

Brake system

The brake system of the truck comprises three different brakes:

- Service brake
- Regenerative brake
- Parking brake

The service brake is based on a wear-free, oil-immersed multi-disc brake. This multi-disc brake is used as the service brake for heavy braking or emergency braking with the brake pedal. In the normal working mode, the regenerative brake of the electric traction motor takes effect. The regenerative brake converts the acceleration energy of the truck into electrical energy. This causes the truck to decelerate as soon as the accelerator pedal is released. Completely removing your foot from the accelerator pedal causes the truck to brake until it comes to a standstill. A parking brake ensures that the truck remains securely in place when parked.

Hydraulic system

The required oil volume flow is provided via an adjustable hydraulic pump, which is linked to the internal combustion engine. The proportional valve technology provides particularly sensitive movements and safe handling of the load. The hydraulic functions can be parameterised individually by the authorised service centre.

Up to three hydraulic circuits can be used to activate attachments (variant). Depending on the equipment, a hydraulic accumulator is also available in the lifting circuit for the purpose of dampening pressure peaks in the hydraulic system.

Drive concept

The drivetrain comprises a combination of an internal combustion engine, a three-phase generator and an AC motor. Available with either a diesel engine or an LPG engine.

The truck has front-wheel drive with a maintenance-free 30-kW AC motor.

Steering

Kickback-free, hydraulic rear-wheel steering

Operating devices

The truck is characterised by an accessible operating concept. When purchasing the truck, a variety of operating devices and equipment variants are available:

- 2-way mini-lever
- 3-way mini-lever
- 4-way mini-lever
- Joystick 4Plus
- Fingertip switch
- Single pedal
- Dual pedal

For drive mode, the truck features either single-pedal or dual-pedal operation. The accelerator pedal is used to accelerate and brake (regenerative brake) the truck. In emergency situations or when carrying heavy loads, the driver can also brake the truck using the service brake by pressing the brake pedal.

In dual-pedal operation, the truck has one pedal for the "Forwards" drive direction and one pedal for the "Reverse" drive direction. Acceleration and braking behaviour can be individually selected from five different drive programmes.

General

The truck described in these operating instructions corresponds to the applicable standards and safety regulations.

If the truck is to be operated on public roads, it must conform to the existing national regulations for the country in which it is being used. The driving permit must be obtained from the appropriate office.

The truck has been fitted with state-of-the-art technology. Following these operating instructions will allow the truck to be handled safely. By complying with the specifications in these operating instructions, the functionality and the approved features of the truck will be retained.

Get to know the technology, understand it and use it safely - these operating instructions provide the necessary information and help to avoid accidents and to keep the truck ready for operation beyond the warranty period.

Therefore:

– Before commissioning the truck, read the operating instructions and follow the instructions.

– Always follow all of the safety information contained in the operating instructions and on the truck.

Conformity marking

The manufacturer uses the conformity marking to document the conformity of the industrial truck with the relevant directives at the time of placing on the market:

- CE: in the European Union (EU)
- UKCA: in the United Kingdom (UK)
- EAC: in the Eurasian Economic Union

The conformity marking is applied to the nameplate. A declaration of conformity is issued for the EU and UK markets.

An unauthorised structural change or addition to the industrial truck can compromise safety, thus invalidating the declaration of conformity.

▷

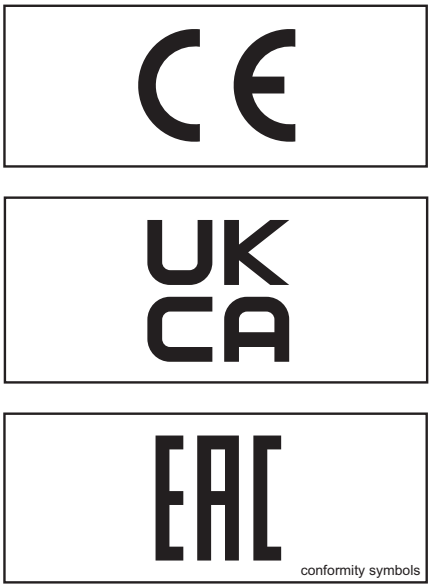

conformity symbols

Declaration that reflects the content of the declaration of conformity

Declaration

STILL GmbH
Berzeliusstraße 10
22113 Hamburg Germany

We declare that the specified machine conforms to the most recent valid version of the directives specified below:

Industrial truck type	**corresponding to these operating instructions**
Model	**corresponding to these operating instructions**

– "Machinery Directive 2006/42/EC" [1)]
– "Supply of Machinery Safety Regulations 2008, 2008 No. 1597" [2)]

Personnel authorised to compile the technical documents:

See declaration of conformity

STILL GmbH

[1)] For the markets of the European Union, the EU candidate countries, the EFTA States and Switzerland.
[2)] For the United Kingdom market.

The declaration of conformity document is supplied with the industrial truck. The declaration shown explains the conformity with the provisions of the EC Machinery Directive and the Supply of Machinery Safety Regulation 2008, 2008 No. 1597.

An unauthorised structural change or addition to the industrial truck can compromise safety, thus invalidating the declaration of conformity.

The declaration of conformity must be carefully stored and made available to the responsible authorities if necessary. It must also be handed over to the new owner if the industrial truck is sold on.

Accessories overview

- Key for key switch (2 pieces)
- Key for cab (variant)
- Hexagon socket wrench for emergency lowering

Labelling points overview

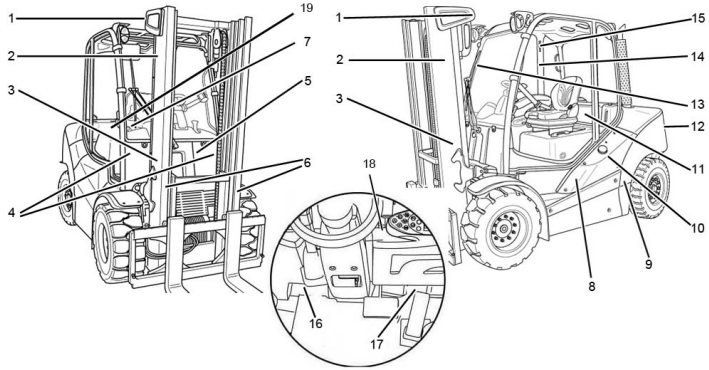

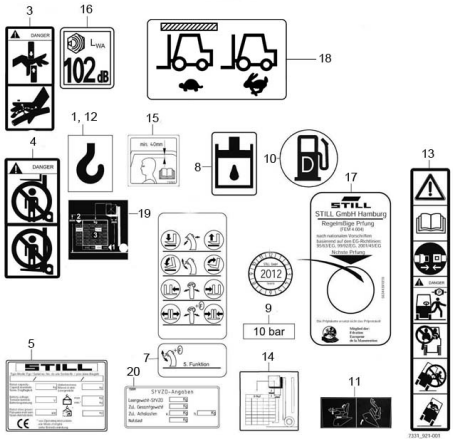

1 Decal information: Fixing point for lifting gear
2 Manufacturer's label text
3 Warning sign: Danger due to shearing/Danger due to high fluid pressure
4 Warning sign: Do not stand underneath the fork/Do not stand on the fork
5 Nameplate
6 Warning sign: Danger due to shearing/Danger due to high fluid pressure/and warning sign: Do not stand underneath the fork/Do not stand on the fork
7 Decal information: Joystick functions (variant)
8 Decal information: Top up hydraulic oil
9 Decal information: Tyre filling pressure (variant), on both sides of the truck
10 Decal information: Top up diesel fuel
11 Decal information: Armrest adjustment
12 Decal information: Lifting gear attachment points
13 Decal information: Caution / Read the operating instructions / Fasten seat belt / Apply parking brake when leaving the truck / Passengers are not allowed / Do not jump off if the truck is tipping over / Lean in the opposite direction to which the truck is tipping
14 Decal information: Capacity rating plate/Capacity rating plate: Attachment (variant)
15 Decal information: Head clearance
16 Decal information: Sound power level
17 Decal information: FEM test with inspection sticker
18 Decal information: Ceiling sensor
19 Capacity rating plate
20 Decal information: StVZO (German Road Traffic Licensing Regulations) information (variant)

Nameplate

The truck can be identified from the information on the nameplate.

The information for the battery weights (5, 6) and the ballast weight (7) only applies to electric forklift trucks.

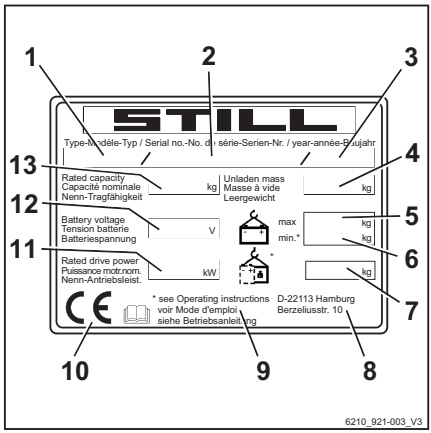

1 Type
2 Production number
3 Year of manufacture
4 Tare weight in kg
5 Max. permissible battery weight in kg
6 Min. permissible battery weight in kg
7 Ballast weight in kg
8 Address of manufacturer
9 Refer to the technical data listed in these operating instructions for more detailed information
10 CE labelling
11 Nominal drive power in kW
12 Battery voltage in V
13 Rated capacity in kg

Serial number

The serial number is used to identify the truck. The serial number is shown on the nameplate. Quote the serial number for all technical questions.

The serial number contains the following coded information:

1 Production location
2 Model
3 Year of manufacture
4 Sequential number

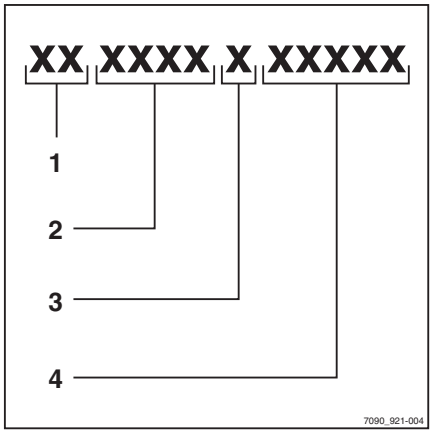

StVZO (Road Traffic Licensing Regulations) information

This label includes information on the weight and load distribution of the truck.

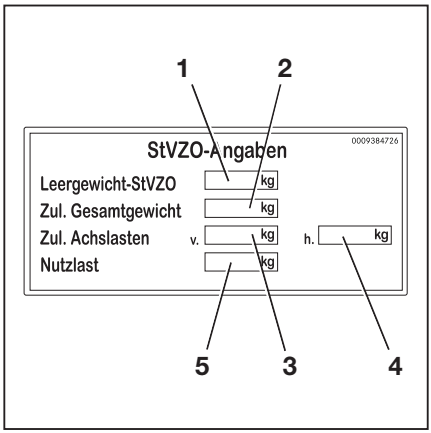

1 Tare weight (in kg)
2 Permitted total weight (in kg)
3 Permitted front axle weight (in kg)
4 Permitted rear axle weight (in kg)
5 Payload (in kg)

Using the truck

Intended use

The truck described in these operating instructions is suitable for lifting, transporting and stacking loads.

The truck may only deployed for its intended use as set out and described in these operating instructions.

If the truck is to be used for purposes other than those specified in the operating instructions, the approval of the manufacturer and, if applicable, the relevant regulatory authorities must be obtained beforehand in order to prevent hazards.

The maximum load to be lifted is specified on the capacity rating plate (load diagram) and must not be exceeded; see the section entitled "Capacity rating plate" in the chapter entitled "Handling loads".

Proper use during towing

This truck is suitable for the occasional towing of trailers and is equipped with a towing device for this purpose. This occasional towing may not exceed 2% of the daily operating time. If the truck is to be used for towing on a more regular basis, the manufacturer should be consulted.

The regulations regarding trailer operation must be observed; see chapter "Trailer operation".

Improper use

The operating company or driver, and not the manufacturer, is liable for any hazards caused by improper use.

NOTE

Please note the definition of the following responsible persons: "operating company" and "driver".

Use for purposes other than those described in these operating instructions is prohibited.

⚠ DANGER

There is a risk of fatal injury from falling off the truck while it is moving!

– It is prohibited to carry passengers on the truck.

The truck may not be operated in areas where there is a risk of explosion, in areas that cause corrosion or in areas that are particularly dusty.

Stacking or unstacking on inclined surfaces or ramps is not permitted.

Place of use

The truck can be used outdoors.

When using the truck with a particle filter (variant) in halls, observe the national regulations for the country in which the truck is being used.

Operation on public roads is only permitted with the "StVZO" (Road Traffic Licensing Regulations) equipment variant.

If the truck is to be operated on public roads, it must conform to the existing national regulations for the country in which it is being used.

The ground must have an adequate load capacity (concrete, asphalt) and a rough surface. Routes, working areas and aisle widths must conform to the specifications in these operating instructions; see the chapter entitled "Routes".

Driving on upward and downward gradients is permitted provided the specified data and specifications are observed; see the chapter entitled "Routes".

The truck is suitable for use in many different countries, ranging from those situated in the Tropics to those in Nordic regions (temperature range: -20°C to +40°C).

This truck is not designed to be operated in cold stores.

The operating company must ensure suitable fire protection for the relevant application in the truck's surroundings. Depending on the application, additional fire protection must be provided on the truck. If in doubt, contact the relevant authorities.

NOTE

Please observe the definition of the following responsible person: "operating company".

DANGER

Risk to health from exhaust gases!

Exhaust gases from internal combustion engines are harmful to your health. In particular, the soot particles contained in the diesel exhaust gas can cause cancer. When the internal combustion engine is left running, there is a risk of poisoning due to the CO, CH and NOx components contained in the exhaust gas.

Modern exhaust gas treatment systems (e.g. catalytic converters, particle filters or comparable systems) can clean exhaust gases in a way that reduces the health hazard and risk of poisoning when operating the truck.

- Observe the national laws and regulations when using trucks with an internal combustion engine in entirely or partially enclosed working areas.
- Always ensure sufficient ventilation.

Using working platforms

WARNING

The use of working platforms is regulated by national law. The use of working platforms is only permitted by virtue of the jurisdiction in the country of use.

- Observe national legislation.
- Before using working platforms, consult the national regulatory authorities.

Information about the documentation

Documentation scope

- Original operating instructions
- Original operating instructions for attachments (variant)
- Spare parts list
- Depending on the truck equipment, "UPA" operating instructions may also be provided

NOTE

Refer to the additional information in the section entitled "Rules for the operating company of industrial trucks".

These operating instructions describe all measures necessary for the safe operation and proper maintenance of the truck in all possible variants available at the time of printing. Special versions to meet customer requirements (UPA) are documented in separate operating instructions. If you have any questions, please contact your authorised service centre.

Enter the production number and year of manufacture from the nameplate in the space provided:

Production number: _____

Year of manufacture: _____

Please quote the production number in all technical enquiries.

Each truck comes with a set of operating instructions. These instructions must be stored carefully and must be available to the driver and operating company at all times. The storage location is specified in the chapter entitled "Overviews".

If the operating instructions are lost, the operating company must obtain a replacement from the manufacturer immediately.

The operating instructions are included in the spare parts list and can be reordered as a spare part.

The personnel responsible for operating and maintaining the equipment must be familiar with these operating instructions.

The operating company must ensure that all users have received, read and understood these operating instructions.

Safely store the complete documentation and pass on to the subsequent operating company when transferring or selling the truck.

NOTE

Please observe the definition of the following responsible persons: "operating company" and "driver".

Thank you for reading and complying with these operating instructions. If you have any questions or suggestions for improvements, or if you have found any errors, please contact the authorised service centre.

Supplementary documentation

This industrial truck can be fitted with a **C**ustomer **O**ption (**CO**) that deviates from the standard equipment and the variants.

This CO may consist of:

- Special sensors
- A special attachment
- A special towing device
- Customised attachments

When fitted with a CO, the industrial truck is provided with additional documentation. This may take the form of an insert or separate operating instructions.

The original operating instructions for this industrial truck are valid for the operation of standard equipment and variants without restriction. The operational and safety information in the original operating instructions continues to be valid in its entirety unless it is countermanded in this additional documentation.

The requirements for the qualification of personnel as well as the time for maintenance may vary. This is defined in the additional documentation.

– If you have any questions, contact your authorised service centre.

Issue date and topicality of the operating instructions

The issue date and the version of these operating instructions can be found on the title page.

STILL is constantly engaged in the further development of trucks. These operating instructions are subject to change, and any claims based on the information and/or illustrations contained in them cannot be asserted.

Please contact your authorised service centre for technical support relating to your truck.

Copyright and trademark rights

These instructions must not be reproduced, translated or made accessible to third parties—including as excerpts—except with the express written approval of the manufacturer.

Explanation of signal terms used

⚠ DANGER

Indicates procedures that must be strictly adhered to in order to prevent the risk of fatalities.

⚠ WARNING

Indicates procedures that must be strictly adhered to in order to prevent the risk of injuries.

⚠ CAUTION

Indicates procedures that must be strictly adhered to in order to prevent material damage and/or destruction.

NOTE

For technical requirements that require special attention.

ENVIRONMENT NOTE

To prevent environmental damage.

List of abbreviations

This list of abbreviations applies to all types of operating instructions. Not all of the abbreviations that are listed here will necessarily appear in these operating instructions.

Abbreviation	Meaning	Explanation
ArbSchG	Arbeitsschutzgesetz	German implementation of EU occupational health and safety directives
BetrSichV	Betriebssicherheitsverordnung	German implementation of the EU working equipment directive
BG	Berufsgenossenschaft	German insurance company for the company and employees
BGG	Berufsgenossenschaftlicher Grundsatz	German principles and test specifications for occupational health and safety
BGR	Berufsgenossenschaftliche Regel	German rules and recommendations for occupational health and safety
DGUV	Berufsgenossenschaftliche Vorschrift	German accident prevention regulations

Abbreviation	Meaning	Explanation
CE	Communauté Européenne	Confirms conformity with product-specific European directives (CE labelling)
CEE	Commission on the Rules for the Approval of the Electrical Equipment	International commission on the rules for the approval of electrical equipment
DC	Direct Current	Direct current
DFÜ	Datenfernübertragung	Remote data transfer
DIN	Deutsches Institut für Normung	German standardisation organisation
EG	European Community	
EN	European standard	
FEM	Fédération Européene de la Manutention	European Federation of Materials Handling and Storage Equipment
F_{max}	maximum Force	Maximum power
GAA	Gewerbeaufsichtsamt	German authority for monitoring/issuing regulations for worker protection, environmental protection, and consumer protection
GPRS	General Packet Radio Service	Transfer of data packets in wireless networks
ID no.	Identification number	
ISO	International Organization for Standardization	International standardisation organisation
K_{pA}	Uncertainty of measurement of sound pressure levels	
LAN	Local Area Network	Local area network
LED	Light Emitting Diode	Light emitting diode
L_p	Sound pressure level at the workplace	
L_{pAZ}	Average continuous sound pressure level in the driver's compartment	
LSP	Load centre of gravity	Distance of the centre of gravity of the load from the front face of the fork backs
MAK	Maximum workplace concentration	Maximum permissible air concentrations of a substance at the workplace
Max.	Maximum	Highest value of an amount
Min.	Minimum	Lowest value of an amount
PIN	Personal Identification Number	Personal identification number
PPE	Personal protective equipment	
SE	Super-Elastic	Superelastic tyres (solid rubber tyres)

Abbreviation	Meaning	Explanation
SIT	Snap-In Tyre	Tyres for simplified assembly, without loose rim parts
StVZO	Straßenverkehrs-Zulassungs-Ordnung	German regulations for approval of vehicles on public roads
TRGS	Technische Regel für Gefahrstoffe	Ordinance on hazardous materials applicable in the Federal Republic of Germany
UKCA	United Kingdom Conformity Assessed	Confirms conformity with the product-specific directives that apply in the United Kingdom (UKCA labelling)
VDE	Verband der Elektrotechnik Elektronik Informationstechnik e. V.	German technical/scientific association
VDI	Verein Deutscher Ingenieure	German technical/scientific association
VDMA	Verband Deutscher Maschinen- und Anlagenbau e. V.	German Mechanical Engineering Industry Association
WLAN	Wireless LAN	Wireless local area network

Definition of directions

The directions "forwards" (1), "backwards" (3), "right" (2) and "left" (4) refer to the installation position of the parts as seen from the driver's compartment; the load is to the front.

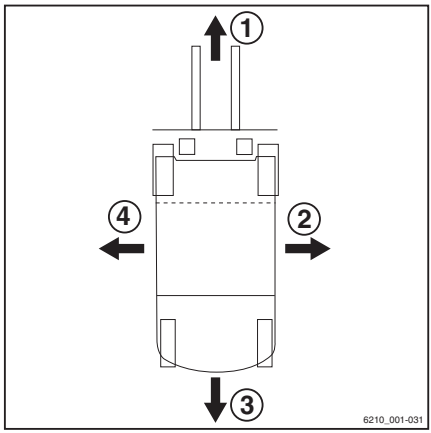

Schematic views

View of functions and operations

This documentation explains the (usually sequential) chain of certain functions or operations. Schematic diagrams of a counterbalance truck are used to illustrate these procedures.

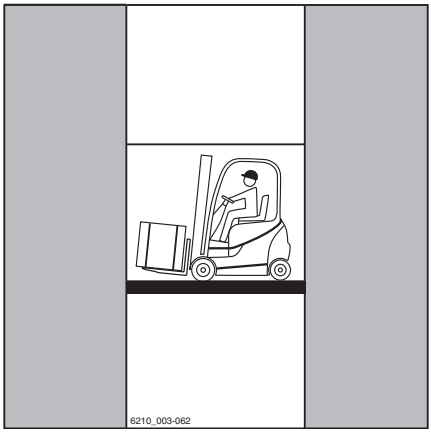

NOTE

These schematic diagrams are not representative of the structural state of the documented truck. The diagrams are used solely for the purpose of clarifying procedures.

View of the display operating unit

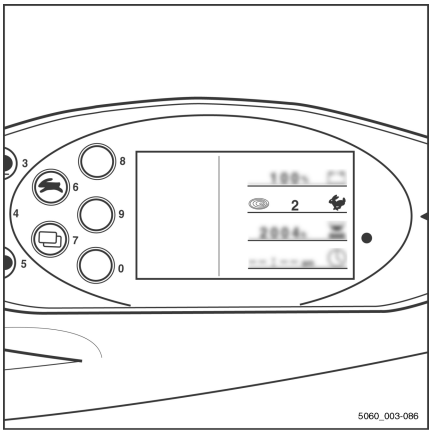

NOTE

Views of operating statuses and values in the display of the display operating unit are examples and partly dependent on the truck equipment. As a result, the displays shown of the actual operating statuses and values can vary. Information that is not relevant for descriptions is not shown.

Environmental considerations

Packaging

During delivery of the truck, certain parts are packaged to provide protection during transport. This packaging must be removed completely prior to initial start-up.

ENVIRONMENT NOTE

The packaging material must be disposed of properly after delivery of the truck.

Disposal of components and batteries

The truck is composed of different materials. If components or batteries need to be replaced and disposed of, they must be:

- disposed of,
- treated or
- recycled in accordance with regional and national regulations.

NOTE

The documentation provided by the battery manufacturer must be observed when disposing of batteries.

ENVIRONMENT NOTE

We recommend working with a waste management company for disposal purposes.

2

Safety

Definition of terms used for responsible persons

Operating company

The operating company is the natural or legal person or group who operates the truck or on whose authority the truck is used.

The operating company must ensure that the truck is only used for its proper purpose and in compliance with the safety regulations set out in these operating instructions.

The operating company must ensure that all users read and understand the safety information.

The operating company is responsible for the scheduling and correct performance of regular safety checks.

We recommend that the national performance specifications are adhered to.

Specialist

A qualified person is defined as a service engineer or a person who fulfils the following requirements:

- A completed vocational qualification that demonstrably proves their professional expertise. This proof should consist of a vocational qualification or a similar document.
- Professional experience indicating that the qualified person has gained practical experience of industrial trucks over a proven period during their career During this time, this person has become familiar with a wide range of symptoms that require checks to be carried out, such as based on the results of a hazard assessment or a daily inspection
- Recent professional involvement in the field of the industrial truck test in question and an appropriate further qualification are essential. The qualified person must have experience of carrying out the test in question or of carrying out similar tests. Moreover, this person must be aware of the latest technological developments regarding the industrial truck to be tested and the risk being assessed

Drivers

This truck may only be driven by suitable persons who are at least 18 years of age, have been trained in driving, have demonstrated their skills in driving and handling loads to the operating company or an authorised representative, and have been specifically instructed to drive the truck. Specific knowledge of the truck to be operated is also required.

The training requirements under §3 of the Health and Safety at Work Act and §9 of the plant safety regulations are deemed to have been satisfied if the driver has been trained in accordance with BGG (General Employers' Liability Insurance Association Act) 925. Observe the national regulations for your country.

Driver rights, duties and rules of behaviour

The driver must be trained in his rights and duties.

The driver must be granted the required rights.

The driver must wear protective equipment (protection suit, safety footwear, safety helmet, industrial goggles and gloves) that is appropriate for the conditions, the job and the load to be lifted. Solid footwear should be worn to ensure safe driving and braking.

The driver must be familiar with the operating instructions and have access to them at all times.

The driver must:

- have read and understood the operating manual
- have familiarised himself with safe operation of the truck
- be physically and mentally able to drive the truck safely

⚠ DANGER

The use of drugs, alcohol or medications that affect reactions impair the ability to drive the truck!

Individuals under the influence of the aforementioned substances are not permitted to perform work of any kind on or with the truck.

Prohibition of use by unauthorised persons

The driver is responsible for the truck during working hours. He must not allow unauthorised persons to operate the truck.

When leaving the truck, the driver must secure it against unauthorised use, e.g. by pulling out the key.

Basic principles for safe operation

Insurance cover on company premises

In many cases, company premises are restricted public traffic areas.

NOTE

The business liability insurance should be reviewed to ensure that, in the event of any damage caused in restricted public traffic areas, there is insurance cover for the truck in respect of third parties.

Modifications and retrofitting

If the truck will be used for work that is not listed in the directives or in these instructions, convert or retrofit the truck for this purpose as required. Any structural modification can impair the handling and stability of the truck, and can result in accidents.

Any modifications that adversely affect the stability, the load capacity or the circumferential view of the truck require written approval from the manufacturer.

The following components may only be modified with prior written approval from the manufacturer:

- Brakes
- Steering
- Operating devices
- Safety systems
- Equipment variants
- Attachments

The truck may only be converted with written approval from the manufacturer. If necessary, obtain approval from the relevant authorities.

– Only the authorised service centre is permitted to perform welding work on the truck.

We warn against installing and using restraint systems that have not been approved by the manufacturer.

– Contact the authorised service centre before converting or retrofitting the truck.

The operating company is only permitted to make modifications to the truck independently if the manufacturer goes into liquidation and the company is not taken over by another legal person.

The operating company must also fulfil the following prerequisites:

- Design documents, test documents and assembly instructions associated with the modification must be permanently archived and remain accessible at all times.
- The capacity rating plate, the decal information, the hazard warnings and the operating instructions must be checked to ensure that they are consistent with the modifications and must be amended if required.
- Modifications must be designed, checked and implemented by a design office that specialises in industrial trucks. The design office must comply with the standards and directives valid at the time that modifications are made.

Decal information with the following data must be permanently affixed to the truck so that it is clearly visible:

- Type of modification
- Date of modification
- Name and address of the company that carried out the modification

Changes to the overhead guard and roof loads

⚠ DANGER

In the event of the overhead guard failing due to a falling load or the truck tipping over, there are potentially fatal consequences for the driver. There is a risk to life!

Welding and drilling on the overhead guard changes the material characteristics and the structural design of the overhead guard. Excessive forces caused by falling loads or the truck tipping over may result in buckling of the modified overhead guard and no protection for the driver.

– Do not perform welding on the overhead guard.

– Do not perform drilling on the overhead guard.

⚠ CAUTION

Heavy roof loads damage the overhead guard!

To ensure the stability of the overhead guard at all times, a roof load may only be mounted on the overhead guard if the structural design has been tested and the manufacturer has given approval.

– Seek advice from the authorised service centre for the mounting of roof loads.

Warning about any manipulation of the internal combustion engine

The internal combustion engine used in this truck possesses an EU type approval, which is required for the legitimate operation of this truck.

Manipulation of the internal combustion engine in any way invalidates this EU type approval. In this case, operation of the truck is also no longer permitted.

Warning regarding non-original parts

Original parts, attachments and accessories are specially designed for this truck. We specifically draw your attention to the fact that parts, attachments and accessories supplied by other companies have not been tested and approved by STILL.

⚠ CAUTION

Installation and/or use of such products may therefore have a negative impact on the design features of the truck and thus impair active and/or passive driving safety.

We recommend that you obtain approval from the manufacturer and, if necessary, from the relevant regulatory authorities before installing such parts. The manufacturer accepts no liability for any damage caused by the use of non-original parts and accessories without approval.

Damage, defects and misuse of safety systems

Damage or other defects on the truck or attachment must be reported to the supervisor or responsible fleet manager immediately so that they can have the defect rectified.

Trucks and attachments that are not functional or safe to drive may not be used until they have been properly repaired.

Do not remove or deactivate safety systems and switches.

Fixed set values may only be changed with the approval of the manufacturer.

Work on the electrical system (e.g. connecting a radio, additional headlights etc.) is only permitted with the manufacturer's written approval. All electrical system interventions must be documented.

Even if they are removable, roof panels may not be removed, as they are designed to protect against small falling objects.

Length of the fork arms

⚠ DANGER

Risk of accident due to the incorrect selection of fork arms!

– The fork arms must match the depth of the load.

If the fork arms are too short, the load may fall off the arms after it has been picked up. In addition, be aware that the load centre of gravity may shift as a result of dynamic forces, such as braking. A load that is otherwise resting safely on the fork arms may move forwards and fall.

If the fork arms are too long, they can catch on loading units behind the load that is to be picked up. These other loading units then fall over when the load is raised.

– For help with selecting the correct fork arms, contact the authorised service centre.

Tyres

⚠ DANGER

Risk to stability!

Failure to observe the following information and instructions can lead to a loss of stability. The truck may tip over, risk of accident!

The following factors can lead to a loss of stability and are therefore **prohibited**:

- Different tyres on the same axle, e.g. pneumatic tyres and superelastic tyres
- Tyres not approved by the manufacturer
- Excessive tyre wear
- Tyres of inferior quality
- Changing rim wheel parts
- Combining rim wheel parts from different manufacturers

The following rules must be observed to ensure stability:

- Only use tyres with equal and permitted levels of wear on the same axle
- Only use wheels and tyres of the same type on the same axle, e.g. only superelastic tyres
- Only use wheels and tyres approved by the manufacturer
- Only use high-quality products

Wheels and tyres approved by the manufacturer can be found on the spare parts list.
If other wheels or tyres are to be used, authorisation from the manufacturer must be obtained beforehand.

– Contact the authorised service centre on this matter.

When changing wheels or tyres, always ensure that this does not cause the truck to tilt to one side (e.g. always replace right-hand and left-hand wheels at the same time). Changes must only be made following consultation with the manufacturer.

If the type of tyre used on an axle is changed, for example from superelastic tyres to pneumatic tyres, the load diagram must be changed accordingly.

– Contact the authorised service centre on this matter.

Medical equipment

⚠ WARNING

Electromagnetic interference may occur on medical devices!

Only use equipment that is sufficiently protected against electromagnetic interference.

Medical equipment, such as pacemakers or hearing aids, may not work properly when the truck is in operation.

– Ask your doctor or the manufacturer of the medical equipment to confirm that the medical equipment is sufficiently protected against electromagnetic interference.

Exercise caution when handling gas springs and accumulators

⚠ WARNING

Gas springs are under high pressure. Improper removal results in an elevated risk of injury.

For ease of operation, various functions on the truck can be supported by gas springs. Gas springs are complex components that are subject to high internal pressures (up to 300 bar). They may under no circumstances be opened unless instructed to do so, and may be installed only when not under pressure. If required, the authorised service centre will depressurise the gas spring in accordance with the regulations before removal. Gas springs must be depressurised before recycling.

– Avoid damage, lateral forces, buckling, temperatures over 80°C and heavy contamination.
– Damaged or defective gas springs must be changed immediately.
– Contact the authorised service centre.

⚠ WARNING

Accumulators are under high pressure. Improper installation of an accumulator results in an elevated risk of injury.

Before starting work on the accumulator it must be depressurised.

– Contact the authorised service centre.

Length of the fork arms

⚠ DANGER

Risk of accident due to the incorrect selection of fork arms!

– The fork arms must match the depth of the load.

If the fork arms are too short, the load may fall off the arms after it has been picked up. In addition, be aware that the load centre of gravity may shift as a result of dynamic forces, such as braking. A load that is otherwise resting safely on the fork arms may move forwards and fall.

If the fork arms are too long, they can catch on loading units behind the load that is to be picked up. These other loading units then fall over when the load is raised.

– For help with selecting the correct fork arms, contact the authorised service centre.

Residual risk

Residual dangers, residual risks

Despite working with care and complying with the standards and regulations, the possibility of other dangers arising when using the truck cannot be ruled out.

The truck and all other system components comply with current safety requirements. Even when the industrial truck is used in accordance with its intended use and all instructions provided are followed, some residual risk cannot be excluded.

A residual risk cannot be excluded even beyond the narrow limits of the danger area that the truck itself represents. In order to be able to react immediately in the event of a malfunction, an incident, a breakdown etc., persons in the danger area must pay increased attention to the truck.

⚠ WARNING

All persons in the danger area of the truck must be aware of the dangers posed by the truck.

In addition, your attention is drawn to the safety regulations given in these operating instructions.

Risks can include:

- Escape of consumables due to leakages, rupture of lines and containers etc.
- Risk of accident when driving over difficult ground such as gradients, very smooth or uneven surfaces, or with poor visibility etc.
- Falling, tripping etc. on the truck, especially in wet weather, with leaking consumables or on icy surfaces
- Risk of fire and explosion from the batteries and electrical voltages
- Human error resulting from failure to observe the safety regulations
- Unrepaired damage or faulty and worn components
- Insufficient maintenance and testing
- Use of incorrect consumables
- Exceeding test intervals

If the operating company negligently or intentionally fails to comply with these require-

ments, this can lead to an accident. In this case, the manufacturer is exempt from liability.

Stability

The stability of the truck has been tested to the latest technological standards. If the truck is used in the proper manner and in accordance with its intended use, the stability of the truck is guaranteed. These standards only take into account the dynamic and static tipping forces that can arise when used in accordance with the specified operating rules and intended use. The danger of exceeding the moment of tilt and losing stability due to improper or incorrect operation can never be ruled out.

The loss of stability can be avoided or minimised by complying with following principles:

- Always secure the load against slipping, e.g. by lashing.
- Always transport unstable loads in suitable containers.
- Always drive slowly when cornering.
- Drive with the load lowered.
- On trucks fitted with a sideshift, align and transport loads such that the load centre of gravity is positioned centrally to the truck.
- Avoid turning and diagonally driving across slopes or gradients.
- Never have the load facing downhill when travelling on slopes or gradients.
- Always take great care when transporting suspended loads.
- Do not drive over ramp edges or steps.

Special risks associated with using the truck and attachments

Approval from the manufacturer and attachment manufacturer must be obtained each time the truck is used in a manner that falls outside the scope of normal use, and in cases where the driver is not certain that he can

use the truck correctly and without the risk of accidents.

Overview of hazards and countermeasures

NOTE

This table is intended to help evaluate the hazards in your facility and applies to all drive types. It does not claim to be complete.

– Observe the national regulations for the country in which the truck is being used.

Hazard	Course of action	Check note √ done - Not applicable	Notes
Truck equipment does not comply with local regulations	Testing	O	If in doubt, consult the responsible factory inspectorate or employers' liability insurance association
Driver's lack of skills or qualifications	Driver training (sit-on and stand-on)	O	DGUV principle 308-001 VDI 3313 driver's licence
Usage by unauthorised persons	Access with key only for authorised persons	O	
Truck not safe for operation	Periodic inspection and rectification of defects	O	German Ordinance on Industrial Safety and Health (BetrSichV)
Risk of falling when using working platforms	Compliance with national regulations (different national laws)	O	German Ordinance on Industrial Safety and Health (BetrSichV) and employer's liability insurance associations
Impaired visibility due to load	Application planning	O	German Ordinance on Industrial Safety and Health (BetrSichV)
Contamination of breathable air	Assessment of diesel exhaust gases	O	Technical Regulations for Hazardous Substances (TRGS) 554 and the German Ordinance on Industrial Safety and Health (BetrSichV)
	Assessment of LPG exhaust gases	O	German threshold limit values list (MAK-Liste) and the German Ordinance on Industrial Safety and Health (BetrSichV)

Hazard	Course of action	Check note √ done - Not applicable	Notes
Impermissible usage (improper usage)	Provide operating instructions	O	German Ordinance on Industrial Safety and Health (BetrSichV) and German Health and labour protection law (ArbSchG)
	Written notice of instruction to driver	O	German Ordinance on Industrial Safety and Health (BetrSichV) and German Health and labour protection law (ArbSchG)
	German Ordinance on Industrial Safety and Health (BetrSichV), observe the operating instructions	O	
When fuelling			
a) Diesel	German Ordinance on Industrial Safety and Health (BetrSichV), observe the operating instructions	O	
b) LPG	DGUV regulation 79, observe the operating instructions	O	
When charging the drive battery	German Ordinance on Industrial Safety and Health (BetrSichV), observe the operating instructions	O	VDE 0510-47 (= DIN EN 62485-3): In particular - Ensure adequate ventilation - Insulation value within the permissible range
When using battery chargers	German Ordinance on Industrial Safety and Health (BetrSichV), DGUV rule 113-001 and observe the operating instructions	O	German Ordinance on Industrial Safety and Health (BetrSichV) and DGUV rule 113-001
When parking LPG trucks	German Ordinance on Industrial Safety and Health (BetrSichV),	O	German Ordinance on Industrial Safety and Health (BetrSichV) and DGUV rule 113-001

Hazard	Course of action	Check note √ done - Not applicable	Notes
	DGUV rule 113-001 and observe the operating instructions		
When operating driverless transport systems			
Roadway quality inadequate	Clean/clear roadways	O	German Ordinance on Industrial Safety and Health (BetrSichV)
Loading equipment incorrect/slipped	Reposition load on pallet	O	German Ordinance on Industrial Safety and Health (BetrSichV)
Unpredictable driving behaviour	Employee training	O	German Ordinance on Industrial Safety and Health (BetrSichV)
Routes blocked	Mark routes Keep roadways clear	O	German Ordinance on Industrial Safety and Health (BetrSichV)
Routes intersect	Announce right-of-way rule	O	German Ordinance on Industrial Safety and Health (BetrSichV)
No person detection when placing goods into stock and removing goods from stock	Employee training	O	German Ordinance on Industrial Safety and Health (BetrSichV)

Danger to employees

According to the German Ordinance on Industrial Safety and Health (BetrSichV) and labour protection law (ArbSchG), the operating company must determine and assess hazards during operation, and establish the labour protection measures required for employees (BetrSichVO). The operating company must therefore draw up appropriate operating instructions (§ 6 ArbSchG) and nominate a person who is responsible for these operating instructions. Drivers must be informed of the operating instructions that apply to them.

NOTE

Please note the definition of the following responsible persons: "operating company" and "driver".

The design and equipment of the truck comply with the standards and directives required for CE conformity. The design and equipment also comply with the standards and directives necessary for the UKCA compliance that is required in the United Kingdom. The design and equipment are therefore not part of the required scope of the hazard assessment. The same applies to attachments with their own CE labelling and UKCA labelling. The operating company must, however, select the type and equipment of the trucks so as to comply with the local provisions for deployment.

The result of the hazard assessment must be documented (§ 6 ArbSchG). In the case of truck applications involving similar hazard situations, the results may be summarised. Refer to the chapter entitled "Overview of hazards and countermeasures", which provides advice on complying with this regulation. The overview specifies the primary hazards that, in the event of non-compliance, are the most frequent causes of accidents. If other major hazards are present as a result of the specific operating conditions, these hazards must also be taken into consideration.

The conditions of use for trucks are broadly similar in many plants, so the hazards can be summarised in one overview. Observe the information provided by the relevant employers' liability insurance association on this subject.

Safety tests

Regular safety inspection of the truck ▷

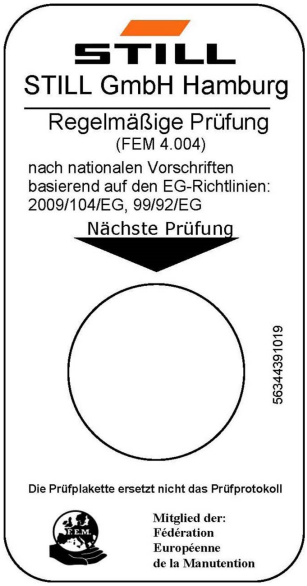

Safety inspection based on time and extraordinary incidents

The operating company must ensure that the truck is checked by a specialist at least once a year or after particular incidents.

As part of this inspection, a complete check of the technical condition of the truck must be performed with regard to accident safety. In addition, the truck must be thoroughly checked for damage that could potentially have been caused by improper use. A test log must be created. The results from the inspection must be retained until a further two inspections have been carried out.

The inspection date is indicated by an adhesive label on the truck.

– Arrange for the service centre to perform periodic safety inspections on the truck.

– Observe guidelines for checks carried out on the truck in accordance with FEM 4.004.

The operator is responsible for ensuring any defects are remedied without delay.

– Contact your service centre.

NOTE

Observe the national regulations for your country!

Checking the diesel engine emissions

– Check the diesel engine emissions yearly in accordance with TRGS 554.

The exhaust-gas check must be carried out by a "competent person" and must be recorded in writing.

– Notify the authorised service centre.

NOTE

Observe the national regulations for the country in which the truck is being used.

Trucks with particle filters

Trucks with particle filters (variant) may be operated in entirely or partially enclosed working areas.

DANGER

Risk to health from exhaust gases! Exhaust gases from internal combustion engines are harmful to your health. In particular, the soot particles contained in the diesel exhaust gas can cause cancer. When the internal combustion engine is left running, there is a risk of poisoning due to the CO, CH and NO_X components present in the exhaust gas.

Modern exhaust gas treatment systems (e.g. catalytic converters, particle filters or comparable systems) can clean exhaust gases in a way that reduces the health hazard and risk of poisoning when operating the truck.

– Observe the national laws and regulations when using trucks fitted with an internal combustion engine in entirely or partially enclosed working areas.

– Always ensure sufficient ventilation.

NOTE

Observe the national regulations of the country in which the truck is being used!

The operating company must ensure that the following requirements are met; see chapter entitled "Definition of terms used for responsible persons":

- Usage must be reported to the responsible occupational health and safety authorities.
- Operating instructions must be displayed in the working areas.
- Danger areas should be confined and indicated by appropriate warning and safety signs.
- Employees must be made aware of dangers and protective measures.
- The particle filter must be changed every 6000 operating hours. The exhaust-gas check must be carried out by a specialist (see chapter entitled "Definition of terms

used for responsible persons") and must be recorded in writing.

NOTE

Observe the TRGS 554 regulations and the national regulations of the country in which the truck is being used.

Insulation testing

The truck insulation must have sufficient insulation resistance. For this reason, insulation testing in accordance with DIN EN 1175 and DIN 43539, VDE 0117 and VDE 0510 must be conducted at least once every year.

NOTE

Contact your service centre to arrange for an insulation test.

Measuring the insulation resistance of the electrical system

NOTE

Nominal battery voltage < test voltage < 500 V.

– Ensure that all voltage sources have been disconnected from the circuit to be tested.

– Measure the insulation resistance with a suitable measuring device.

The insulation resistance can be considered sufficient if it measures at least 1000 Ω/V for nominal battery voltage against ground.

– Contact the authorised service centre.

Safety regulations for handling consumables

Permissible consumables

⚠ WARNING

Consumables can be dangerous!

– Observe general information and safety information regarding the use of consumables.

– Refer to the chapter entitled "Safety regulations for handling consumables".

– Note the safety datasheets provided by the manufacturer of the consumables in question.

– Only use consumables that are approved for use with this truck. The permissible consumables can be found in the maintenance data table.

Oils

⚠ DANGER

Oils are flammable!

– Follow the statutory regulations.

– Do not allow oils to come into contact with hot engine parts.

– No smoking, fires or naked flames!

⚠ DANGER

Oils are toxic!

– Avoid contact and consumption.

– If vapour or fumes are inhaled, move to fresh air immediately.

– In the event of contact with the eyes, rinse thoroughly (for at least 10 minutes) with water and then consult an eye specialist.

– If swallowed, do not induce vomiting. Seek immediate medical attention.

⚠ WARNING

Prolonged intensive contact with the skin can result in dryness and irritate the skin!

– Avoid contact and consumption.
– Wear protective gloves.
– After any contact, wash the skin with soap and water, and then apply a skin care product.
– Immediately change soaked clothing and shoes.

⚠ WARNING

There is a risk of slipping on spilled oil, particularly when combined with water!

– Spilt oil should be removed immediately with oil-binding agents and disposed of according to the regulations.

ENVIRONMENT NOTE

Oil is a water-polluting substance!

- *Always store oil in containers that comply with the applicable regulations.*
- *Avoid spilling oils.*
- *Spilt oil should be removed immediately with oil-binding agents and disposed of according to the regulations.*
- *Dispose of old oils according to the regulations.*

Hydraulic fluid

⚠ WARNING

These fluids are pressurised during operation of the truck and are hazardous to your health.

– Do not spill the fluids.
– Follow the statutory regulations.
– Do not allow the fluids to come into contact with hot engine parts.

⚠ WARNING

These fluids are pressurised during operation of the truck and are hazardous to your health.

– Do not allow the fluids to come into contact with the skin.

– Avoid inhaling spray.

– Penetration of pressurised fluids into the skin is particularly dangerous if these fluids escape at high pressure due to leaks in the hydraulic system. In case of such injury, immediate medical assistance is required.

– To avoid injury, use appropriate personal protective equipment (e.g. protective gloves, industrial goggles, skin protection and skin care products).

ENVIRONMENT NOTE

Hydraulic fluid is a water-polluting substance.

- *Always store hydraulic fluid in containers that comply with regulations*
- *Avoid spills*
- *Spilt hydraulic fluid should be removed immediately with oil-binding agents and disposed of according to the regulations*
- *Dispose of old hydraulic fluid according to the regulations*

Battery acid

⚠ WARNING

Battery acid contains dissolved sulphuric acid. This is toxic.

– Avoid touching or swallowing the battery acid at all costs.

– In case of injury, seek medical advice immediately.

⚠ WARNING

Battery acid contains dissolved sulphuric acid. This is corrosive.

- When working with battery acid, use appropriate PSA (rubber gloves, apron, protection goggles).
- When working with battery acid, never wear a watch or jewellery.
- Do not allow any acid to get onto clothing or skin or into the eyes. If this does happen, rinse immediately with plenty of clean water.
- In case of injury, seek medical advice immediately.
- Immediately rinse away spilt battery acid with plenty of water.
- Follow the statutory regulations.

ENVIRONMENT NOTE

- Dispose of used battery acid in line with the applicable regulations.

Diesel fuel

⚠ WARNING

Diesel fuel is combustible.

- Observe statutory regulations.
- Do not allow diesel fuel to come into contact with hot engine components.

Do not smoke!

⚠ WARNING

Diesel fuel is toxic!

- Avoid contact and swallowing.
- If vapour or fumes are inhaled, administer fresh air immediately.
- After contact with the eyes, rinse thoroughly (for at least 10 minutes) with water and then consult an eye specialist.
- If swallowed, do not induce vomiting. Seek immediate medical attention.

⚠ WARNING

Prolonged intensive contact with the skin can result in loss of skin oils and can irritate the skin!

- Avoid contact and swallowing.
- Wear protective gloves.
- After any contact, wash the skin with soap and water, and then apply a skin care product.
- Immediately change soaked clothing and shoes.

⚠ WARNING

Risk of slipping due to spilled diesel fuel, particularly in combination with water.

- Immediately collect spilled diesel fuel using an oil-binding agent and dispose of it in accordance with regulations.

ENVIRONMENT NOTE

Diesel fuel is a water-polluting substance!

- Always store in regulation containers.
- Avoid spilling diesel fuel.
- Immediately collect spilled diesel fuel using an oil-binding agent and dispose of it in accordance with regulations.

Coolant and cooling fluid

⚠ WARNING

Coolant and cooling fluid can be hazardous to your health and the environment!

Coolants are chemical corrosion inhibitors and cooling system protecting agents such as Glysantin. The cooling fluid is an appropriate mixture of water and coolant. Coolant in both concentrated and dilute form can be hazardous to your health if swallowed, or hazardous to the environment if spilled.

- Store coolant and cooling fluid only in their original containers and do not spill them.
- Never store coolant or cooling fluid in empty food containers, bottles or other containers.
- Observe the national regulations for the country of use.

ENVIRONMENT NOTE

- Soak up any spilt coolant or cooling fluid immediately using an oil binding agent and dispose of it in accordance with the national regulations for the country of use.
- Dispose of old coolant or cooling fluid in accordance with the national regulations for the country of use.

Disposal of consumables

ENVIRONMENT NOTE

Materials that accumulate during repair, maintenance and cleaning must be collected properly and disposed of in accordance with the national regulations for the country in which the truck is being used. Work must only be carried out in areas designated for the purpose. Care must be taken to minimise any environmental pollution.

- Soak up any spilt fluids such as hydraulic oil, brake fluid or gearbox oil using an oil-binding agent.
- Neutralise any spilt battery acid immediately.

– Always observe national regulations concerning the disposal of used oil.

Emissions

The values specified apply to a standard truck (see technical datasheet). Different tyres, lift masts, additional units etc. may produce different values.

Noise emissions

The values were determined on the basis of measuring procedures from the EN 12053 standard (noise measurement for industrial trucks based on EN 12001 and EN ISO 3744 and the requirements of EN ISO 4871).

Continuous sound pressure level in the driver's compartment	
L_{pAZ}[1]	< 75 dB(A)
Uncertainty K_{pA}	4 dB(A)

[1]: higher continuous sound pressure level with cab/without cab.

This truck has a guaranteed sound power level as listed below:

Truck model	L_{waz}
RX70-40	106 dB
RX70-45	106 dB
RX70-50	106 dB
RX70-50/600	106 dB

NOTE

Lower or higher noise levels may occur when using the truck, for instance, due to the method of operation, environmental factors and other sources of noise.

The values were determined in the test cycle on an identical truck from the weighted values for operating statuses and idling.

Time proportions:

- Lifting 18%
- Idling 58%
- Driving 24%

However, the specified noise levels in the truck cannot be used to determine the noise emissions in the workplace in accordance with the most recent version of **Directive 2003/10/EC** (daily personal noise pollution). Observe the applicable national regulations in non-EU countries. If necessary, these noise emissions should be determined directly at the workplace under the actual conditions there (additional noise sources, special application conditions, sound reflections) by the operating company; (see ⇒Chapter "Definition of terms used for responsible persons", Page 24).

Vibrations

The vibrations of the machine have been determined on an identical machine in accordance with the standards DIN EN 13059 "Safety of industrial trucks - Test methods for measuring vibration" and DIN EN 12096 "Mechanical vibration - Declaration and verification of vibration emission values".

Weighted effective value of acceleration to which the body (feet or seat surface) is subjected	< 0.59 m/s^2
Uncertainty K	0.177 m/s^2

Tests have indicated that the amplitude of the hand and arm vibrations on the steering wheel or on the operating devices in the truck is less than 2.5 m/s^2. There are therefore no measurement guidelines for these measurements.

The personal vibration load on the driver over a working day shall be determined in accordance with the **Directive 2002/44/EC** by the operating company (see ⇒Chapter "Definition of terms used for responsible persons", Page 24) at the actual place of use, in order to consider all additional influences, such as driving route, intensity of use etc. Observe the applicable national regulations in non-EU countries.

Exhaust gases

⚠ CAUTION

Risk to health from exhaust gases! Exhaust gases from internal combustion engines are harmful to your health. In particular, the soot particles contained in the diesel exhaust gas can cause cancer. When the internal combustion engine is left running, there is a risk of poisoning due to the CO, CH and NO_x components present in the exhaust gas.

Modern exhaust gas treatment systems (e.g. catalytic converters, particle filters or comparable systems) can clean exhaust gases in a way that reduces the health hazard and risk of poisoning when operating the truck.

- Observe the national laws and regulations when using trucks fitted with an internal combustion engine in entirely or partially enclosed working areas.
- Always ensure sufficient ventilation.

The engine releases exhaust gases into the surrounding environment during operation. The exhaust gases consist mainly of steam, carbon dioxide (CO_2), carbon monoxide (CO), hydrocarbons (CH), aldehydes, nitrogen oxide (NO_X) and soot. The components CO, CH, NO_X and soot are poisonous or are health hazards, and should not be inhaled in high concentrations.

Diesel engine emissions

⚠ DANGER

Health risk as a result of inhaling exhaust gases that have not been filtered!

A particle filter (exhaust gas purifier for diesel engines) can be used to clean exhaust gases so that during truck operation there is no direct health risk or risk of poisoning as a result of the exhaust gas.

- In working areas that are fully or partially enclosed, only operate the truck with the particle filter.

Diesel engine emissions are harmful to your health. The particles contained in the exhaust gases in particular are classified as carcinogenic.

NOTE

Observe the national regulations in the relevant country.

Heat

⚠ DANGER

Risk of burns caused by hot exhaust gases!

Exhaust gases or components that carry exhaust gases (e.g. exhaust pipes) can become so hot that direct body contact can cause burns to the skin and materials that are too close can be burned or singed.

- Do not grasp or touch hot exhaust pipes.
- Keep combustible materials away from the exhaust pipe.
- In the event of burns, seek first aid immediately.
- If materials start to burn, take fire protection measures immediately.

3

Overviews

Truck overview

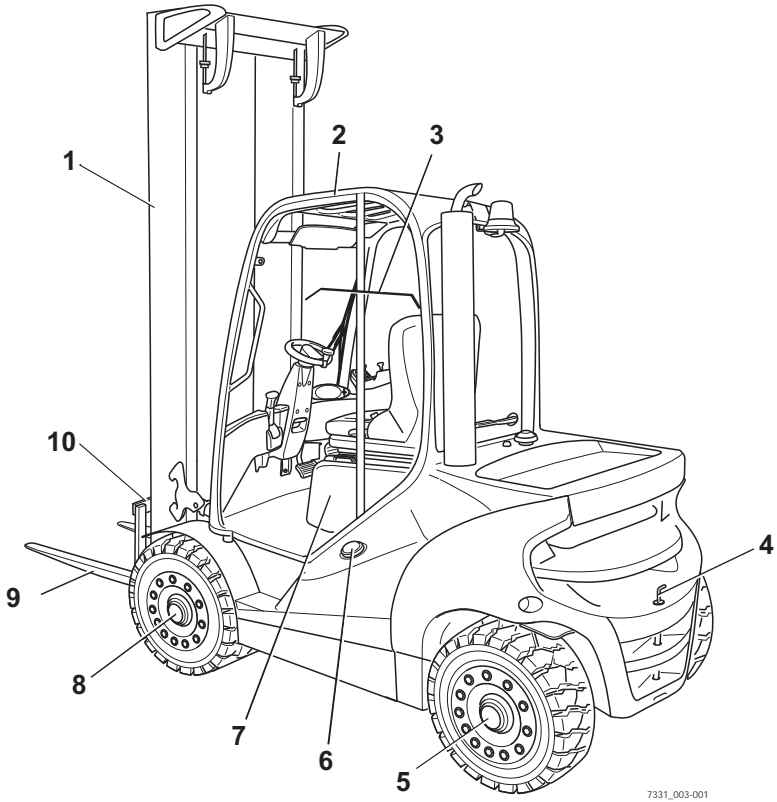

1	Lift mast	6	Fuel tank locking cap
2	Overhead guard	7	Bonnet
3	Driver's compartment	8	Drive axle
4	Towing device	9	Fork arms
5	Steering axle	10	Fork carriage

Overview of driver's compartment

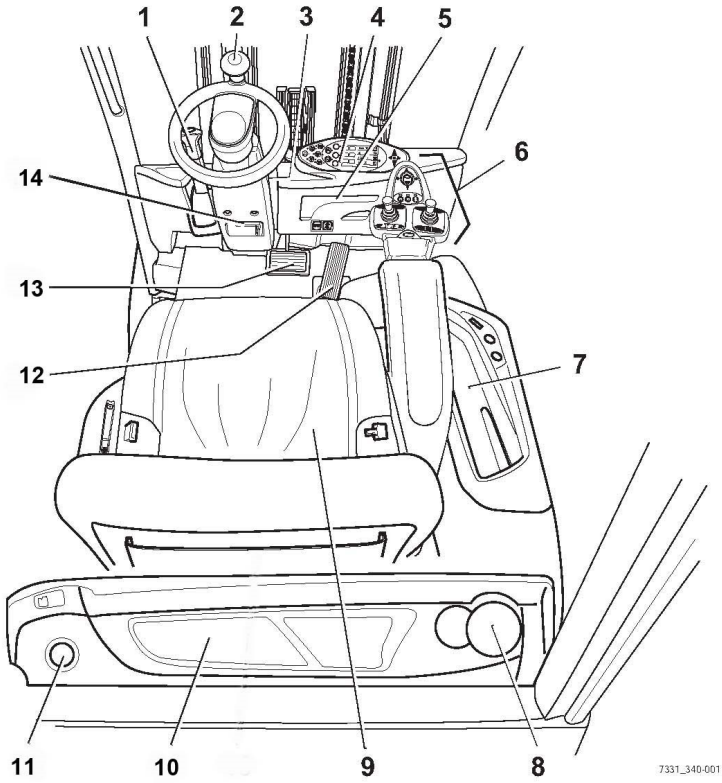

1	Parking brake lever
2	Steering wheel
3	Key switch
4	Display and operating unit
5	Compartment for the operating instructions
6	Operating devices for hydraulic and drive functions
7	Compartment
8	Bottle holder for max. 1.5 l bottles
9	Driver's seat
10	Compartment
11	Filler cap for windscreen washer reservoir
12	Accelerator pedal
13	Brake pedal
14	Steering column adjustment lever

NOTE

The truck equipment may differ from the equipment shown.

Operating devices and display elements

Display and operating unit

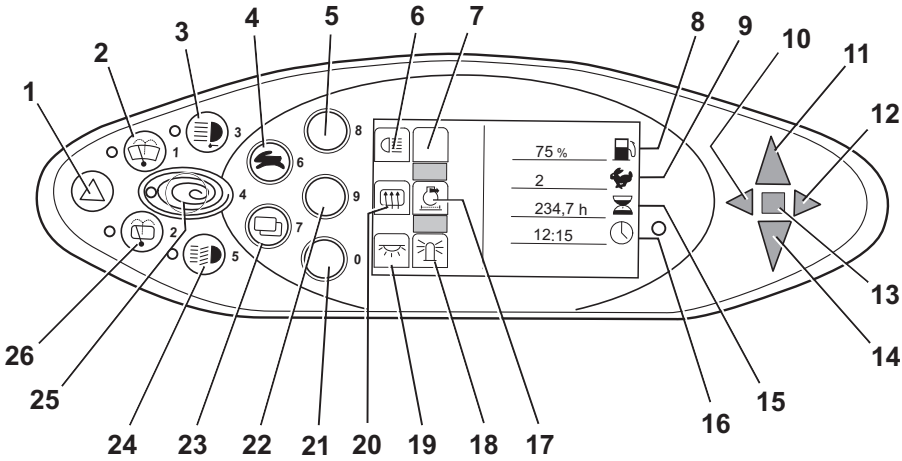

1	Hazard warning system button
2	Front windscreen wiper button
3	Working spotlight button
4	Drive programme selector button
5	Softkey Lighting
6	Lighting symbol
7	Not assigned
8	Fuel level display (percentage)
9	Drive programme display (numerical)
10	Left turn indicator display
11	Forward travel indicator
12	Right turn indicator display
13	Malfunction display
14	Reverse travel indicator
15	Operating hours display
16	Time display (digital)
17	Particle filter display
18	Rotating beacon display
19	Interior lighting display
20	Rear window heating display
21	Softkey Interior light/rotating beacon
22	Softkey Rear window heating/particle filter regeneration
23	Menu change button
24	Lighting button
25	Blue-Q button
26	Rear window wiper button

NOTE

The Softkeys (5, 21, 22) and the accompanying display elements (6, 7, 17, 18, 19, 20) are assigned according to the equipment variants in use.

The assignment shown here is an example and may differ from the assignment actually programmed on the truck. Softkeys can be assigned multiple functions that are called up according to the menu navigation. For further information, see the section entitled "Operating the display-operating unit".

– If you have any questions, please contact your authorised service centre.

Operating devices for hydraulic and driving functions

Different versions of the operating devices are available for operating the truck's hydraulic functions and drive functions.

The truck can be equipped with the following operating devices:

- **Double mini-lever**
- **Triple mini-lever**
- **Quadruple mini-lever**
- **Joystick 4Plus**
- **Fingertip**
- **Mini-console**

Double mini-lever

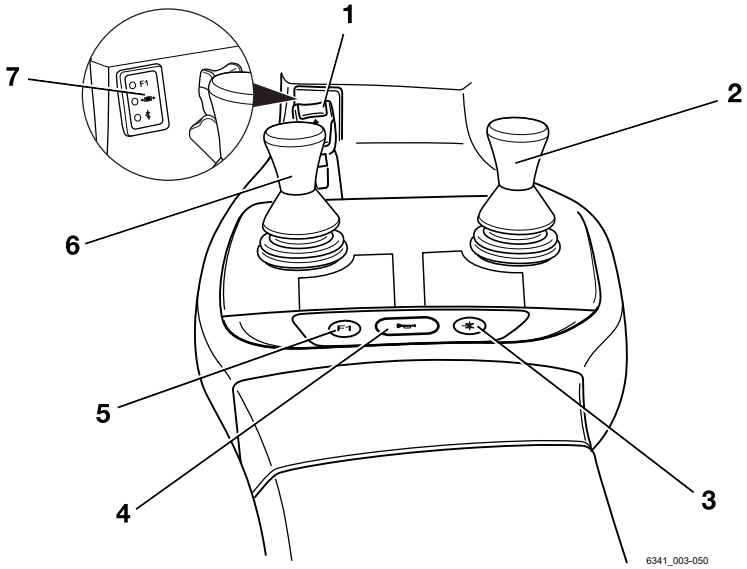

1	Drive direction switch	5	"F1" function key
2	"Attachments" cross lever	6	"Lift mast" 360° lever
3	Function key for the "5th Function"	7	Display field for the hydraulic functions
4	Signal horn button		

NOTE

- *The drive direction switch (1) is inoperable in the dual-pedal version (variant). The drive direction is selected exclusively via the pedals in the dual-pedal version.*
- *The authorised service centre can assign different functions to the "F1" function key (5).*

Triple mini-lever

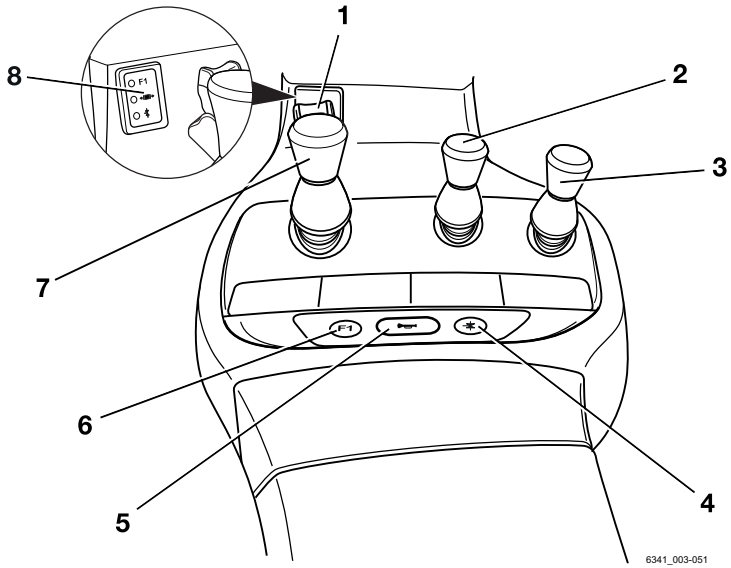

1	Drive direction switch	5	Signal horn button
2	"Auxiliary hydraulics 1" operating lever	6	"F1" function key
3	"Auxiliary hydraulics 2" operating lever	7	"Lift mast" 360° lever
4	Function key for the "5th Function"	8	Display field for the hydraulic functions

NOTE

- *The drive direction switch (1) is inoperable in the dual-pedal version (variant). The drive direction is selected exclusively via the pedals in the dual-pedal version.*
- *The authorised service centre can assign different functions to the "F1" function key (6).*

Quadruple mini-lever

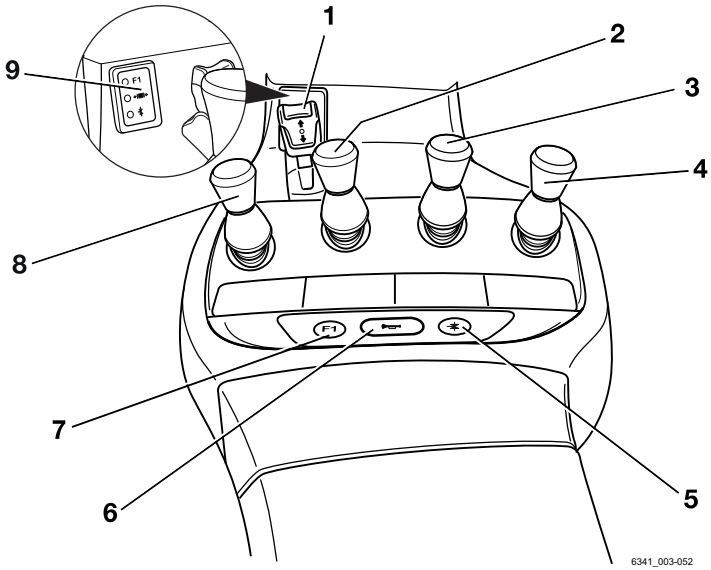

1	Drive direction switch	6	Signal horn button
2	"Tilt" operating lever	7	"F1" function key
3	"Auxiliary hydraulics 1" operating lever	8	"Lift/lower" operating lever
4	"Auxiliary hydraulics 2" operating lever	9	Display field for the hydraulic functions
5	Function key for the "5th Function"		

NOTE

- *The drive direction switch (1) is inoperable in the dual-pedal version (variant). The drive direction is selected exclusively via the pedals in the dual-pedal version.*
- *The authorised service centre can assign different functions to the "F1" function key (7).*

Joystick 4Plus

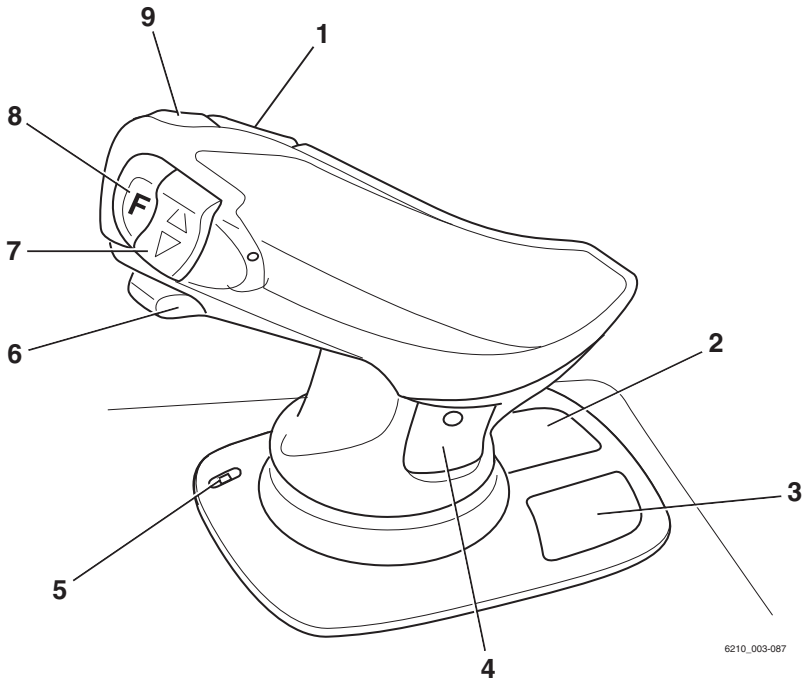

1	Horizontal rocker button for the "3rd hydraulic function", tilting the lift mast	5	LED for the clamp locking mechanism (variant)
2	Symbols for the basic hydraulic functions	6	Slider for the "4th hydraulic function", e.g. side shift frame forwards/backward
3	Pictograms for the 5th hydraulic function and for the clamp locking mechanism (variant)	7	Vertical rocker button for the "drive direction"
4	Pictograms for the 3rd & 4th hydraulic function	8	Shift key "F"
		9	Signal horn button

NOTE

- *The vertical rocker button for the "drive direction" (7) is inoperable in the dual-pedal variant. The drive direction is selected exclusively via the pedals in the dual-pedal version.*

Fingertip

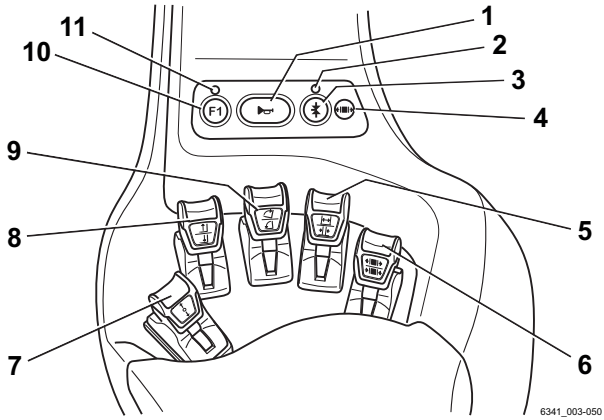

1	Signal horn button	7	Drive direction switch
2	LED for the "5th Function"	8	"Lift/lower" operating lever
3	Function key for the "5th Function"	9	"Tilt" operating lever
4	LED for the "Clamp release"	10	"F1" function key
5	Operating lever for "Auxiliary hydraulics 1"	11	LED for "F1"
6	Operating lever for "Auxiliary hydraulics 2"		

NOTE

- *The drive direction switch (7) is inoperable in the dual-pedal version (variant). The drive direction is selected exclusively via the pedals in the dual-pedal version.*
- *The authorised service centre can assign different functions to the "F1" function key (10).*

Travel direction selector and indicator module (variant) ▷

The travel direction selector and indicator module is located on the steering column below the steering wheel.

NOTE

If the drive direction switch on the operating device is defective and the truck stops in a danger area, the drive direction selection lever on the travel direction selector and indicator module can be used for emergency driving. Refer to the section entitled "Emergency driving via the drive direction switch/drive direction selection lever" in the chapter entitled "Procedure in emergencies".

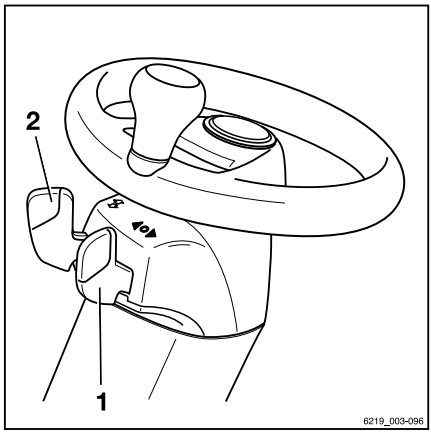

1 Drive direction selection lever
2 Turn indicator switch

4

Operation

Checks and tasks before daily use

Visual inspections and function checking

⚠ WARNING

Risk of injury from falling off the truck!

When climbing onto the truck, there is a risk of getting stuck or slipping and falling. Use suitable equipment to reach higher points on the truck.

- Use only the steps provided for this purpose to climb onto the truck.
- Use equipment such as stepladders or platforms to reach inaccessible areas.

Damage to the truck or the attachment (variant), non-functional switches or safety systems and modification of predefined set values can lead to unpredictable and dangerous situations.
The following checks and tasks enable causes of this type to be identified in good time. It is important to run through all the checks and tasks listed in the following table from top to bottom before daily use of the truck.
If damage or other defects are identified on the truck or the attachment (variant), the truck must not be used until it has been properly repaired.

Ensure that the truck is safe for operation each day before it is used:

Component	Course of action
Fork arms, general lifting accessories	Perform a visual inspection to check for deformation and wear (e.g. to check if they are bent, broken or feature significant wear). Check the condition and function of the fork locking devices for preventing lifting and shifting.
Lift mast roller tracks	Make sure that there is a film of grease.
Load chains	Perform a visual inspection to ensure that the chains are intact and have adequate and even tension.

Component	Course of action
Attachments (variant)	Ensure that the attachments are mounted correctly in accordance with the operating instructions from the manufacturer. Perform a visual inspection to ensure that the attachments are intact and are leak-tight. Perform checks to ensure that the attachments are working correctly.
Underside	Check the area under the truck for leaking consumables.
Overhead guard, guard grille (variant)	Perform a visual inspection for integrity. Check for secure mounting.
Steps	Make sure that they are clean (free of ice, not slippery).
Panes of glass (variant)	Perform a visual inspection for integrity. Make sure that they are clean (also free of ice).
Handholds	Check for secure mounting.
Maintenance lids	Check the close function and close the lid.
Fuel system, fuel tank	Perform a visual inspection for damage and leakages. Have damaged components replaced only by the authorised service centre.
Battery	Perform a visual inspection for integrity and deformation.
Bonnet and side flap	Perform a visual inspection for integrity and deformation. Check that the interlock is in good condition and is working correctly. Check the close function and close the lid.
Coupling pin, tow coupling (variant)	Perform a visual inspection for deformation and wear (for example: bent, torn, broken). Check the securing bush in the counterweight for integrity and to ensure that it is working correctly. Check that the linchpin is present and working correctly (chain, rope, split pin).
Labelling, adhesive labels	Check for presence, integrity and legibility. Replace damaged or missing adhesive labels in accordance with the section entitled "Labelling points".
Driver's seat, seat belt	Check the integrity and function.
Lighting, warning units	Check the integrity and function.

Component	Course of action
Working hydraulics	To activate all available hydraulic functions once, actuate all hydraulic operating devices once. As a general rule: If hydraulic valves have not been operated for a long time, their function may be impaired. This applies regardless of the type and design of the hydraulic valves. This is especially true for hydraulic functions for attachments that are not used frequently. Even if the attachment is not currently mounted, operate these hydraulic functions as well.
Antistatic belt	Perform a visual inspection for integrity. Ensure cleanliness. The antistatic belt must be long enough to touch the ground adequately.
Lift and tilt cylinders, tank, valve block, hoses, pipes, connections	Perform a visual inspection for damage and leakages. Check the area under the truck for leaking consumables. Have damaged components replaced only by the authorised service centre.
Wheels, tyres	Perform a visual inspection for wear and damage. Make sure that only rims of the same type from the same manufacturer are fitted. In the event of uneven tyre wear, replace both tyres. Observe the safety regulations in the section entitled "Tyres".
Axle	Make sure that no consumables are escaping from the axle.
Motor	Check the engine oil level. Top up if necessary. Check the cooling fluid level. Top up if necessary.
Brake system	Check that the truck is working correctly. Refer to the section "Checking the brake system for correct function".

– Do not use the truck if there is any damage or defects.

– Contact the authorised service centre.

Climbing into and out of the truck

⚠ WARNING

Risk of injury when climbing into and out of the truck due to slipping, striking parts of the truck or becoming stuck!

If the footwell cover is very dirty or smeared with oil, there is a risk of slipping. There is a risk of hitting your head on the overhead guard post or of your clothes becoming stuck when climbing out of the truck.

– Ensure that the footwell cover is non-slip.
– Do not jump into or out of the truck.
– Ensure that you have a secure grip on the truck.

⚠ WARNING

Risk of injury when jumping out of the truck!

If your clothing or jewellery (e.g. watch, ring etc.) becomes stuck on a component while you are jumping out of the truck, this can lead to serious injuries (e.g. from falling, loss of fingers etc.). It is forbidden to jump out of the truck.

– Do not jump out of the truck.
– Do not wear jewellery at work.
– Do not wear loose-fitting workwear.

⚠ CAUTION

Components may become damaged through incorrect use!

Truck components, such as the driver's seat, steering wheel, parking brake lever etc., are not designed to be used for climbing in and out of the truck and can be damaged due to misuse.

– Only use the fittings specifically designed for the purpose of climbing into and out of the truck.

To assist with climbing into and out of the truck, the footwell must be used as a step (5) and the handle (1) must be used for support. The post of the overhead guard (2) can also be used for support.

Always climb into the truck forwards:

– Grip the handle (1) with your left hand and hold on.

– Put your left foot on the step (4).

– Climb into the truck with your right foot first and sit down on the driver's seat (3).

Always climb out of the truck backwards:

– Grip the handle (1) with your left hand and hold on.

– Stand up from the driver's seat and place your left foot on the step (4).

– Climb out of the truck right foot first.

▷

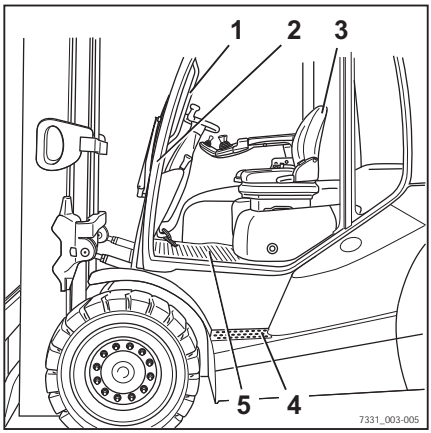

Climbing into and out of a truck with a raised driver's cab

⚠ WARNING

Risk of injury when climbing into and out of the truck due to slipping, striking parts of the truck or becoming stuck!

If the footwell cover is very dirty or smeared with oil, there is a risk of slipping. There is a risk of hitting your head on the overhead guard post or of your clothes becoming stuck when climbing out of the truck.

– Ensure that the footwell cover is not slippery.

– Do not jump into or out of the truck.

– Ensure that you have a secure grip on the truck.

⚠ WARNING

Risk of injury when jumping out of the truck!

If your clothing or jewellery (e.g. watch, ring etc.) becomes stuck on a component while you are jumping out of the truck, this can lead to serious injuries (e.g. from falling, loss of fingers etc.). It is forbidden to jump out of the truck.

– Do not jump out of the truck.

– Do not wear jewellery at work.

– Do not wear loose-fitting workwear.

⚠ CAUTION

Components may become damaged through incorrect use!

Truck components, such as the driver's seat, steering wheel, parking brake lever etc., are not designed to be used for climbing in and out of the truck and may be damaged due to misuse.

– Only use the fittings specifically designed for the purpose of climbing into and out of the truck.

If the truck is equipped with a raised driver's cab, the driver's compartment is significantly higher than that of a standard truck.

For this reason, particular care must be taken when climbing into and out of the truck. The following section describes the best procedure to adopt.

NOTE

The foot that the driver starts with when climbing into and out of the truck is crucial in ensuring this action is carried out safely. This will depend on the number of steps.

To assist when climbing into and out of the truck, use the handles (2) and (4) for support. The post of the overhead guard (1) can also be used for support.

Always **climb into** the truck facing forwards.

– Grip the handle (2) with your left hand and do not let go.

– Grip the handle (4) with your right hand and do not let go.

– Place your right foot on the bottom step (5).

– Place your left foot on the top step (6).

– Place your right foot into the foot well (7).

– Enter the truck and sit down on the driver's seat (3).

Always **climb out of** the truck backwards.

– Grip the handle (2) with your left hand and do not let go.

– Stand up from the driver's seat and place your left foot on the top step (6).

▷

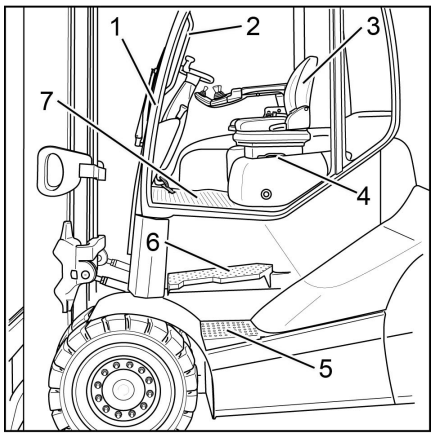

– Grip the handle (4) with your right hand and do not let go.
– Place your right foot on the bottom step (5).
– Place your left foot on the ground and climb down from the truck.

Checking the side cover is locked

– Check whether the side cover is locked, see ⇨Chapter "Closing the side service flap", Page 326 .

Shelves and cup holders

▷

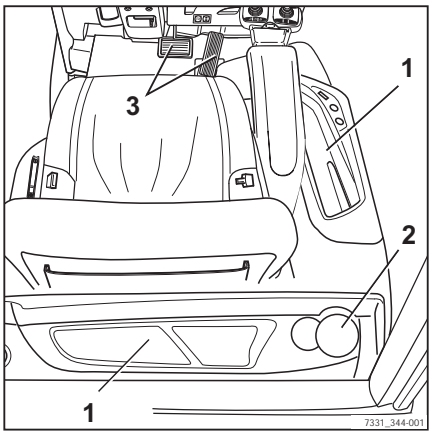

⚠ WARNING

Objects may fall into the footwell and obstruct the pedals, which poses a risk of accident!

Objects to be stored must be of the correct size so that they do not fall from the shelves (1) or out of the cup holder (2). Objects that fall into the footwell during travel as a result of steering or braking may slip between the pedals (3) and prevent them from working correctly. Subsequently, it may not be possible to brake the truck when necessary.

– Bottles of max. 1.5 l may be stored in the cup holder.
– Make sure that stored objects cannot fall from the shelves when the truck is started up, steered or braked.

Adjusting the MSG 65/MSG 75 driver's seat

DANGER

There is a risk of accident if the seat or seat backrest shifts suddenly, which could cause the driver to move in an uncontrolled manner. This may result in unintentional actuation of the steering or operating devices and thus cause the truck or load to move in an uncontrolled fashion.

- Do not adjust the seat or seat backrest while driving.
- Adjust the seat and the seat backrest so that all operating devices can be actuated safely.
- Ensure that the seat and seat backrest are securely engaged.

WARNING

On some equipment variants, the amount of head clearance on the truck may be restricted.

On these specific equipment variants, the distance between the driver's head and the lower edge of the roofing sheet must be at least 40 mm.

NOTE

If there are separate operating instructions for the seat, they must be observed.

WARNING

To obtain optimum seat cushioning, you must adjust the seat suspension to your own body weight. This course of action is better for your back and protects your health.

- To prevent injury, make sure that there are no objects within the swivel area of the seat.

Moving the driver's seat

- Raise the lever (1) and hold it in position.
- Push the driver's seat into the desired position.
- Release the lever.
- Ensure that the driver's seat is securely engaged.

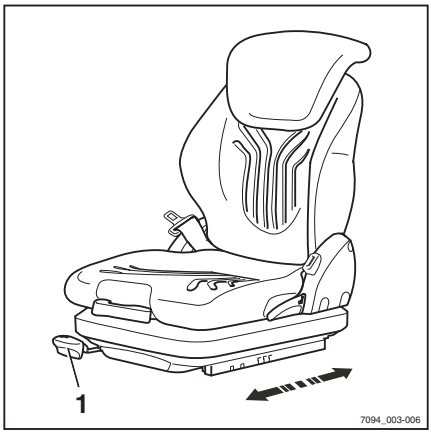

Adjusting the seat backrest

Do not put pressure on the seat backrest while disengaging it.

- Raise the lever (2) and hold it in position.
- Push the seat backrest into the desired position.
- Release the lever.
- Ensure that the seat backrest is securely engaged.

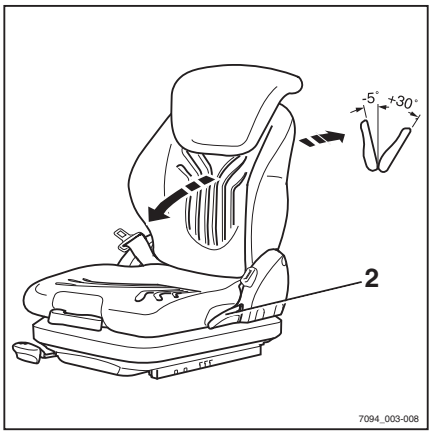

NOTE

The backward tilt angle of the seat backrest can be restricted by the structural condition of the truck.

Adjusting the seat suspension ▷

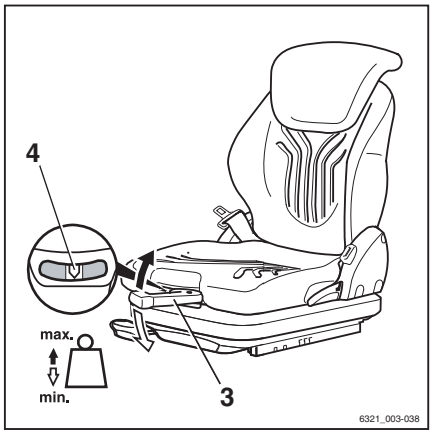

NOTE

The driver's seat can be adjusted to suit the weight of the individual driver. To obtain optimal settings for the seat suspension, the driver must perform the adjustment whilst sitting on the seat.

NOTE

The MSG 65/MSG 75 driver's seat is designed for people weighing between 45 kg and 170 kg.

NOTE

The MSG 75 seat is equipped with electric air suspension that is activated using an electric switch instead of the lever (3).

– Fully fold out the weight adjusting lever (3).

– Pump the lever up or down to set the driver's weight.

– Return the weight adjusting lever to the initial central position before each new lift (a click can be heard).

– Fully fold in the weight adjusting lever once adjustment is complete.

NOTE

The driver's weight has been selected correctly when the arrow (4) is in the centre position of the inspection window. If there is a noticeable empty stroke when you pump the weight-adjusting lever, the minimum or maximum weight setting has been reached.

Adjusting the longitudinal horizontal suspension

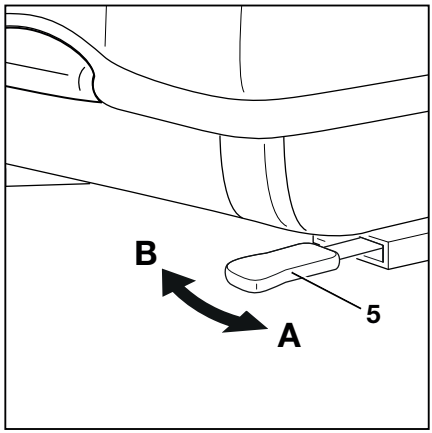

If necessary, the longitudinal horizontal suspension can be blocked using the locking lever (5) on the left-hand side of the driver's seat.

A Longitudinal horizontal suspension activated

B Longitudinal horizontal suspension blocked

– To activate the longitudinal horizontal suspension, push the locking lever (5) to the left (A).

– To block the longitudinal horizontal suspension, push the locking lever (5) to the right (B).

NOTE

If the longitudinal horizontal suspension is blocked, the suspension comfort is significantly lower. Impacts are much more noticeable.

Adjusting the lumbar support (variant)

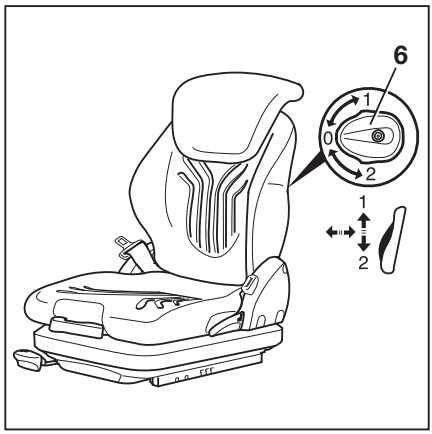

NOTE

The lumbar support can be adjusted to suit the contours of the individual driver's spine. Adjusting the lumbar support moves a convex support cushion into the upper or lower part of the backrest.

– Turn the turning knob (6) up or down until the lumbar support is in the desired position.

Adjusting the backrest extension (variant) ▷

– Adjust the backrest extension (7) by pulling it out or pushing it into the desired position.

To remove the backrest extension, move it past the end stop by firmly pushing it upwards.

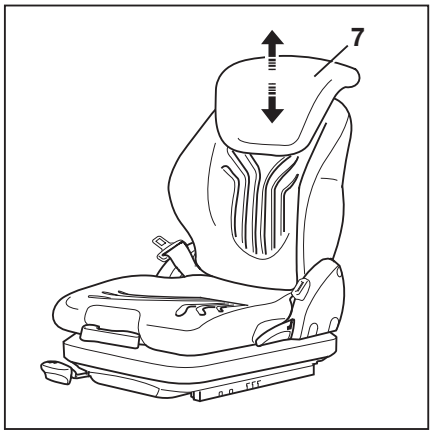

Switching the seat heater (variant) on or off ▷

NOTE

The seat heater only works when the driver is sitting on the driver's seat.

– Switch the seat heater (8) on or off using the switch.

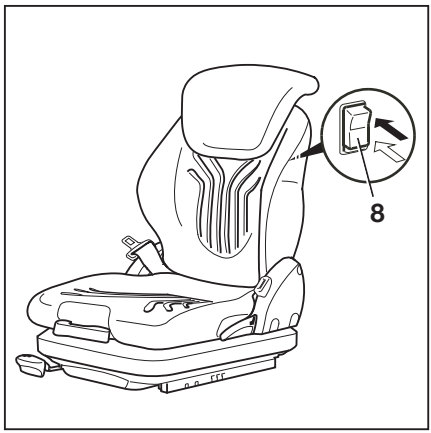

Adjusting the armrest

⚠ DANGER

There is a risk of accident if the armrest lowers suddenly, causing the driver to move in an uncontrolled manner. This can result in unintentional actuation of the steering or the operating devices and thus cause uncontrolled movements of the truck or load.

- Do not adjust the armrest while driving.
- Adjust the armrest so that all operating devices can be actuated safely.
- Ensure that the armrest is securely tightened.

Adjusting the length of the armrest

▷

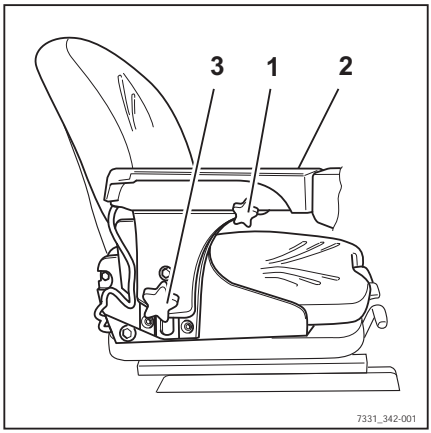

- Release the star-grip handle (1) by turning it anti-clockwise.
- Shift the armrest (2) into the desired position.
- Tighten the star-grip handle by turning it clockwise.
- Check that the armrest is firmly attached.

Adjusting the height of the armrest

- Release hand wheel (3) by turning it anti-clockwise.
- Shift the armrest (2) into the desired position.
- Tighten the hand wheel by turning it clockwise.
- Check that the armrest is firmly attached.

Adjusting the steering column

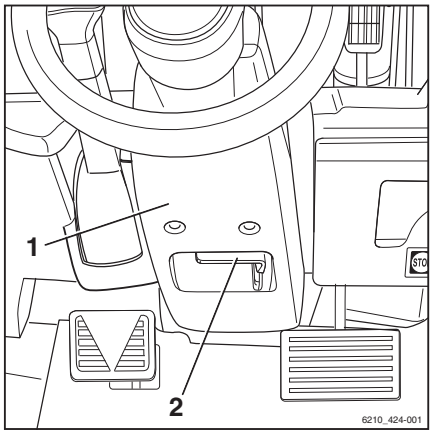

DANGER

Risk of accidents!

Adjusting the steering column during travel may cause the truck to career out of control.

- Adjust the steering column only when the truck is at a standstill.
- Ensure that the steering column is engaged.

- Press down and hold the lever (2) for steering column adjustment.
- Position the steering column (1) and release the lever.

When the steering column engages, the lever snaps back to the initial position.

- Gently push and pull on the steering column to make sure that the steering column is engaged.

Unlocking the emergency off switch

NOTE

Only diesel trucks with a particle filter system (variant) or a joystick 4Plus (variant) have an emergency off switch.

– Pull the emergency off switch (1) until it unlatches. ▷

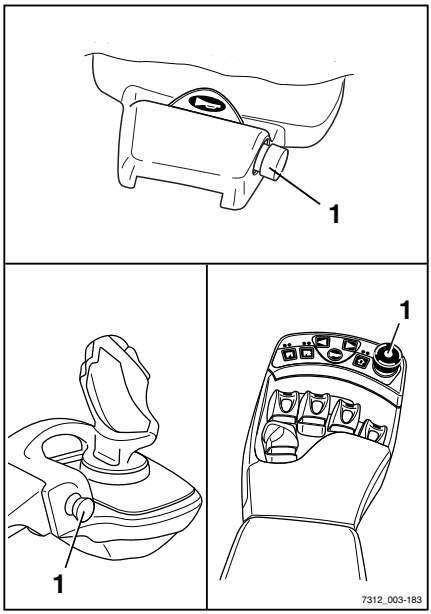

Access authorisation with PIN code (variant)

Description

Trucks equipped with the "Access authorisation with PIN code" variant are protected against unauthorised use by a five-digit driver PIN. Up to fifty different driver PINs can be defined so that the same truck can be used by different drivers, each with their own driver PIN.

NOTE

The driver PINs are defined in a truck control unit menu that can only be accessed by persons with the corresponding access authorisation, e.g. fleet managers.

Once the key switch has been switched on, the input menu for the driver PIN appears on the display and operating unit screen. All of the truck's functions (driving, hydraulics, additional electrical installations and the display

and operating unit displays) are blocked. The function of the hazard warning system (variant) is guaranteed. Enter the five-digit driver PIN (possible entries from 00000 to 99999) to enable the blocked functions. Once the correct driver PIN has been entered, the standard displays are shown. All of the truck functions are available.

The access authorisation can be configured in such a way that the driver PIN has to be re-entered each time the driver steps off the truck, in order for the truck to be operated again.

– Contact the authorised service centre on this matter.

The first driver PIN is preset to "11111" at the factory. All others are preset to "0xFFF" but have no function as the highest valid driver PIN is "99999". Persons with the appropriate access authorisation, e.g. fleet managers, can change the driver PINs in the corresponding menu.

NOTE

When first commissioning the truck, we recommend you change the access authorisation set at the factory. This is the only way to guarantee that the driver PIN is only known to persons with corresponding access authorisation.

The driver PINs are stored in the truck control unit. These are still available if the display and operating unit has been changed. The authorised service centre can use a diagnostic device to read out the driver PIN and, if necessary, restore the factory default driver PIN.

ACCESS CODE input menu

The driver enters the five-digit driver PIN (00000 to 99999) in this input menu.

The driver PIN is entered using the buttons or Softkeys (1). The digits entered for the driver PIN (2) are not visible but are represented by circles instead. If the driver PIN entered is correct, the familiar screen appears with the standard display, and all truck functions are available.

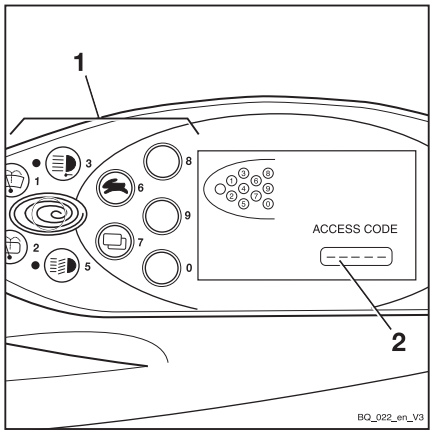

If an incorrect driver PIN is entered, the message `INVALID` appears for a short time. When the message goes out, the driver PIN can be re-entered.

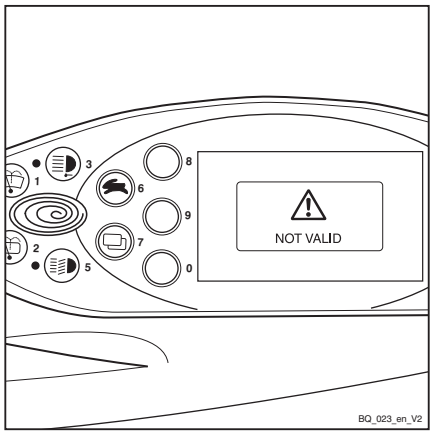

After three invalid entry attempts, the message `CODE DENIED` appears. The input is then locked for five minutes before another attempt can be made.

▷

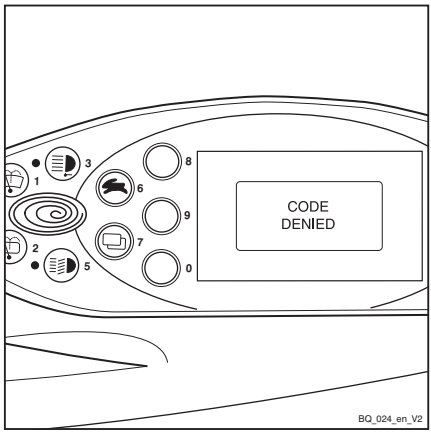

Defining the driver PIN

▷

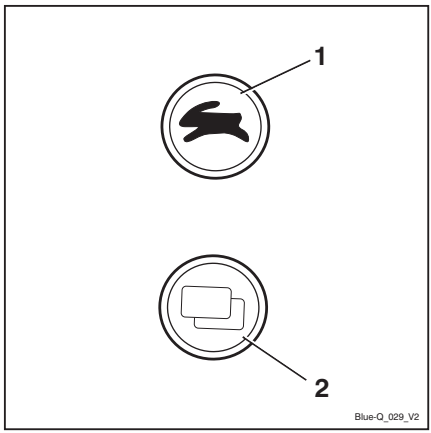

NOTE

The driver PINs can be defined only by persons with the appropriate access authorisation, e.g. fleet managers. To set the driver PIN, the fleet manager must access the configuration menu. The configuration menu is password-protected. After entering the password, the fleet manager can configure general settings for the truck. To change the password, see the chapter entitled "Changing the password".

– Push the drive program selection button (1) and the menu change button (2) at the same time.

PASSWORD appears in the display. ▷

– Enter the four-digit password (factory default: 2777) using the buttons (1).
– Confirm the input using Softkey ↵ (2).

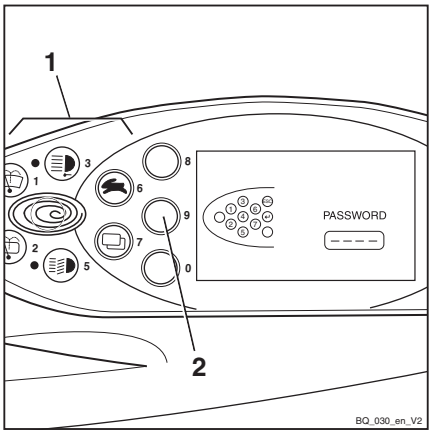

CONFIGURATION appears in the display. ▷

– Use the drive program selection button (1) and the menu change button (3) to select the ACCESS CODE menu.
– Confirm your selection using Softkey ↵ (2).

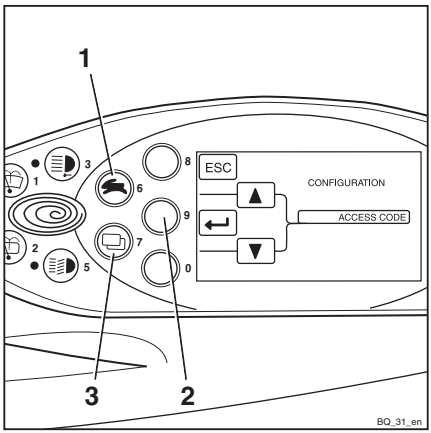

Selecting the driver PIN

In the ACCESS CODE menu, there are fifty possible driver PINs to choose from.

The digit sequences can be set or changed in the NEW CODE submenu.

Once the ACCESS CODE menu has been accessed, the CODE selection field (2) contains the number 1. The first of the fifty driver PINs can now be defined.

– Use the drive program selection button (1) and the menu change button (4) to select the desired driver PIN (1 to 50).

– Confirm your selection using Softkey ↵ (3).

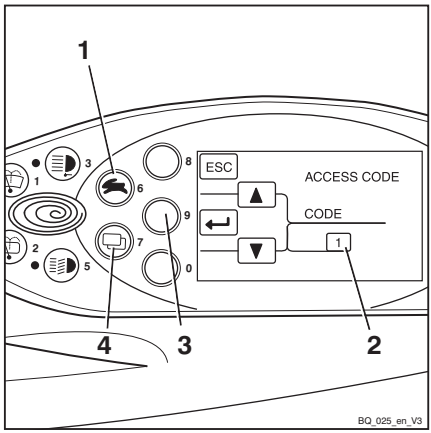

NEW CODE appears in the display.

– Enter the desired driver PIN using the buttons or Softkeys (5).

The digits entered do not appear in the display. Instead they are represented by circles in the NEW CODE field (6).

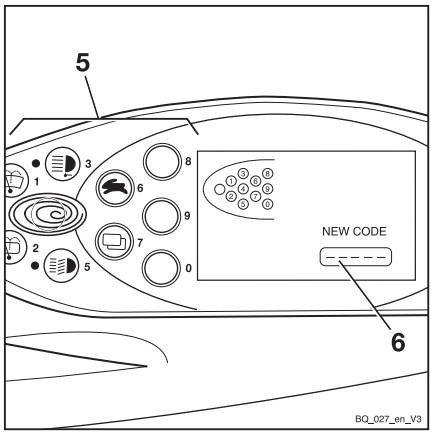

CONFIRM appears in the display. ▷

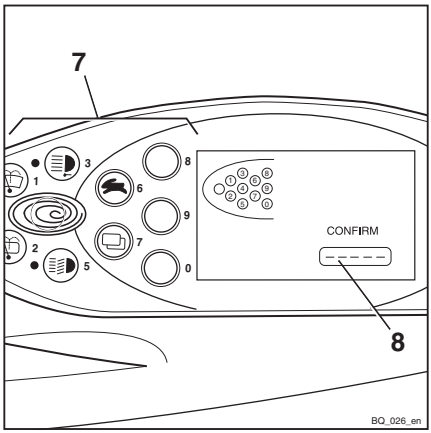

The CONFIRM submenu is used to confirm the new driver PIN.

– Enter the new driver PIN for a second time in the CONFIRM field (8) using the buttons or Softkeys (7).

If the entry matches the new driver PIN previously entered, the system will accept the new driver PIN once the last digit has been entered. The display switches back to the ACCESS CODE menu.

Another driver PIN can be defined here.

If the driver PIN entered in the CONFIRM submenu does not match the driver PIN entered previously in the NEW CODE submenu, the message INVALID will appear. ▷

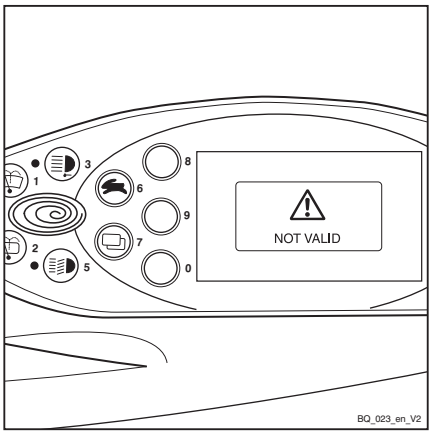

The message will then disappear after a short time. The new driver PIN can be entered in the CONFIRM submenu for further confirmation.

After three incorrect entries, the `CODE DENIED` message appears.

The display switches back to the `ACCESS CODE` menu. The desired driver PIN must be re-defined.

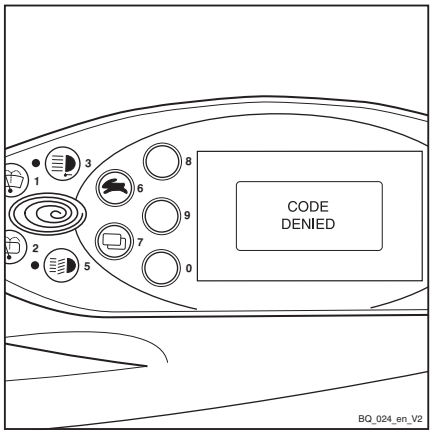

Changing the password

It is recommended that you change the factory default password.

NOTE

The password can only be changed when the parking brake is applied.

– Push the drive program selection button (1) and the menu change button (2) at the same time.

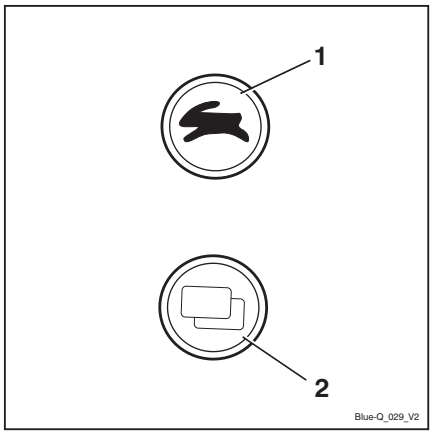

PASSWORD appears in the display. ▷

– Enter the current password using the buttons (1).

– Confirm the input using Softkey ↵ (2).

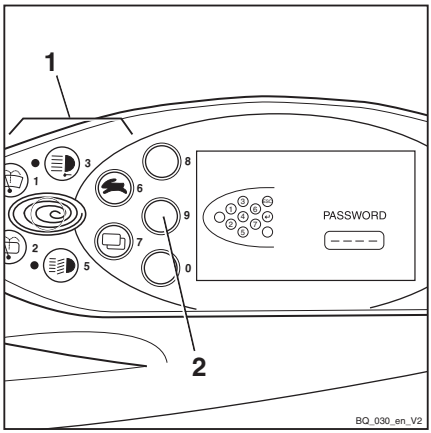

CONFIGURATION appears in the display. ▷

– Use the drive program selection button (1) and the menu change button (3) to select the PASSWORD menu.

– Confirm your selection using Softkey ↵ (2).

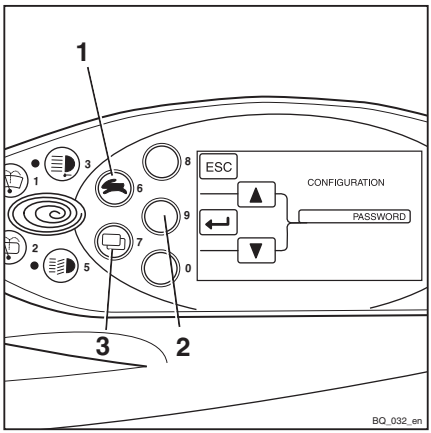

PASSWORD/PASSWORD LEVEL appears in the display. ▷

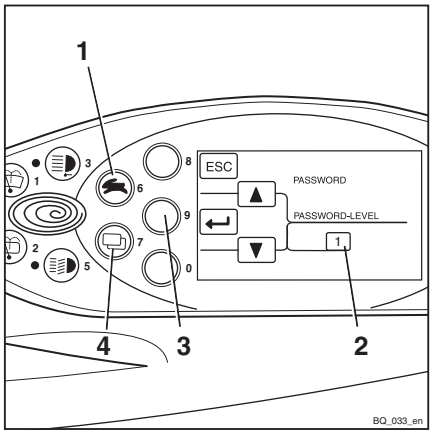

– Use the drive program selection button (1) and the menu change button (4) to select the desired PASSWORD LEVEL (2).
– Confirm your selection using Softkey ↵ (3).

NEW CODE appears in the display. ▷

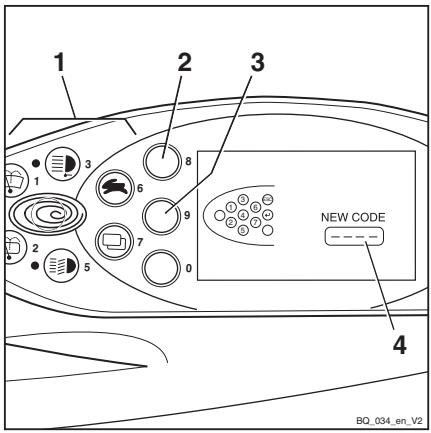

The four-digit password can be entered using the buttons (1).

⚠ CAUTION

Do not enter the password 1777!

If this password is entered, the configuration options for the fleet manager are restricted to driver authorisations and cannot be reset independently.

The authorisations can only be reset by the authorised service centre!

– Enter the new desired password using the buttons (1).

The digits entered are shown in plain text in the NEW CODE field (4).

– Confirm your selection using Softkey ↵ (3).

In the NEW CODE field, -??- appears briefly. The new password is confirmed.

– Press Softkey ESC (2) to correct the new password.

The display switches back to PASSWORD/PASSWORD LEVEL.

– Repeat the process steps from PASSWORD/PASSWORD LEVEL.
– To exit the configuration menu, press Softkey ESC (2) repeatedly until the standard display appears.

Operating the signal horn

NOTE

The signal horn is used to warn people against imminent danger or to announce an overtaking manoeuvre.

– Push the signal horn button (1).

The signal horn sounds.

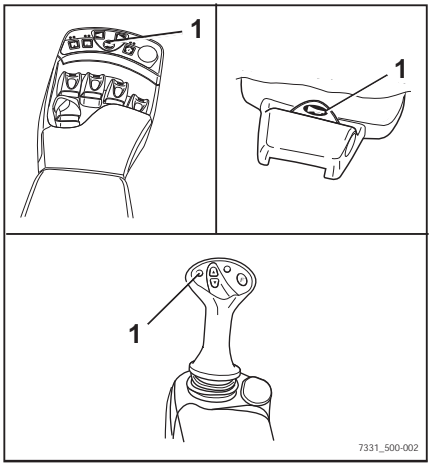

Seat belt

DANGER

Even when using an approved restraint system, there is some residual risk of the driver being injured if the truck tips over.

This risk of injury can be reduced through the combined use of the restraint system and the seat belt.

In addition, the seat belt protects against the consequences of rear-end collisions and falling off a ramp.

– Recommendation: When operating the truck on a ramp, fasten the seat belt in addition to using the driver's cab, the bracket door or the restraining bracket.

⚠ DANGER

Only bracket doors (variant), the restraining bracket (variant) or the driver's cab (variant) with closed, fixed doors constitute a driver restraint system. Plastic doors (weather protection) do not constitute a restraint system!

If the doors are open or have been removed, you must use an alternative suitable restraint system (e.g. a seat belt)!

Fastening the seat belt

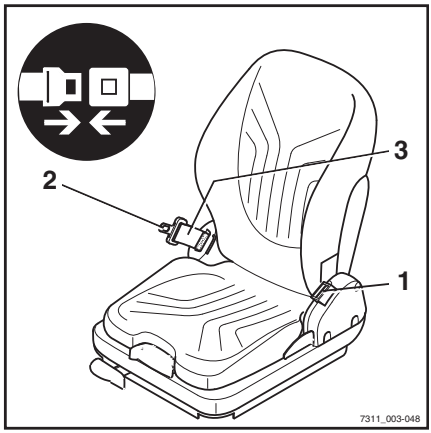

⚠ DANGER

Risk to life when driving without a seat belt!

If the truck tips over or crashes into an obstacle and the driver is not wearing the seat belt, the driver may be thrown from the truck. The driver could slide under the truck or collide with an obstacle.

There is a risk of fatal injury!

- Fasten the seat belt before every trip.
- Do not twist the seat belt when fastening it.
- Only use the seat belt to secure one person.
- Have any malfunctions repaired by the authorised service centre.

NOTE

The buckle has a buckle switch (variant). In the event of an operating error or malfunction, the message `SAFETY BELT` *appears in the display and operating unit, see the chapter entitled "Display messages".*

- Pull the seat belt (3) smoothly out of the belt retractor and fasten closely around the body over the thighs.

NOTE

Sit as far back as possible so that your back is leaning against the seat backrest. The automatic blocking mechanism permits sufficient freedom of movement on the seat.

- Click the belt tongue (2) into the buckle (1).
- Check the tension of the seat belt. The belt should fit closely around your body.

Fastening on a steep slope

The automatic blocking mechanism prevents the belt from being extended whenever the truck is on a steep gradient. It is no longer possible to pull the seat belt out of the belt retractor.

– Move away carefully from the slope.

– Fasten the seat belt.

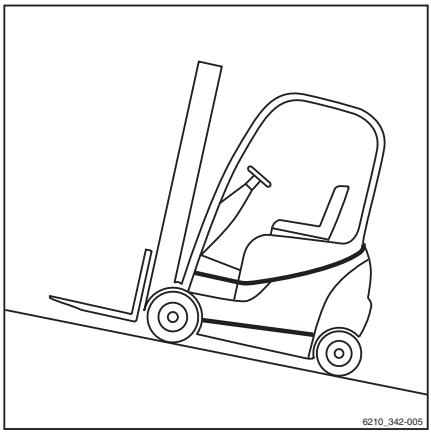

Releasing the seat belt

– Push the red button (4) on the buckle (1).

– Slowly guide the belt tongue back to the retractor by hand.

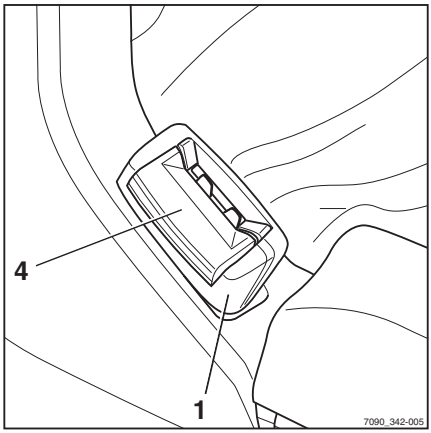

NOTE

Do not allow the seat belt to retract too quickly. The automatic blocking mechanism may be triggered if the belt tongue strikes the housing. It will then no longer be possible to pull the seat belt out with the usual force.

– Using increased force, pull the seat belt around 10-15 mm out of the retractor to disengage the blocking mechanism.

– Slowly allow the seat belt to retract again.

– Protect the seat belt from dirt (for example, by covering it).

Malfunction due to cold weather conditions

– If the buckle or belt retractor is frozen, thaw them out and dry them thoroughly to prevent recurrence.

⚠ CAUTION

The seat belt may be damaged by heat!

Do not subject the buckle or belt retractor to excessive heat when thawing.

– Do not use air warmer than 60°C when thawing.

Using the driver's cab

▷

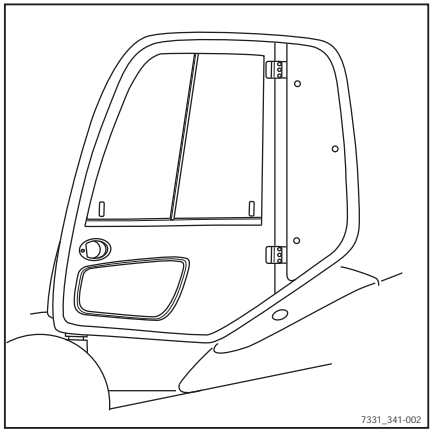

⚠ DANGER

Risk of fatal injury in the event of falling from the truck if it tips over!

In order to prevent the driver from sliding underneath the truck and being crushed if the truck tips over, a restraint system must be in place and must be used. This will prevent the driver from falling out of the truck if it tips over. The driver's cab constitutes a driver restraint system only if the cab door is sturdy and closed. Fabric-covered cabs (variant) with doors made of plastic or canvas do not constitute a driver restraint system and offer no protection from the consequences of the truck tipping over!

– Close the cab door before operation.

– If the door is open or has been removed, use a comparably secure restraint system.

– We recommend that you always use the seat belt.

Checking the brake system for correct function

⚠ DANGER

Risk of accident due to failure of the brake system!

If the brake system fails, the truck will be insufficiently braked or will not be braked at all.

– Do not commission trucks with a defective brake system.

Checking the service brake

▷

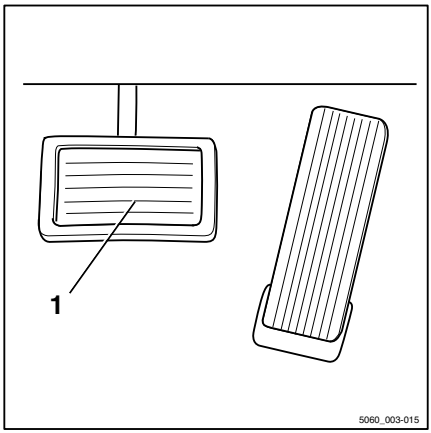

– Release the parking brake.

– Depress the brake pedal (1).

There must be a slight pedal clearance and then a noticeable pressure point at the brake.

– Accelerate the unladen truck in a clear area.

– Press the brake pedal firmly.

The truck must decelerate noticeably.

Checking the parking brake

On a gradient or ramp:

⚠ DANGER

Risk to life if the truck rolls away!

The truck could run people over if the parking brake is not applied.

– Do not exit the truck during the following check.

– Stop the truck on a steep gradient (e.g. a ramp) and actuate the parking brake.

The parking brake must hold the truck on the incline.

If the truck rolls back despite the parking brake being applied:

– Secure the truck using the service brake.

– Secure the truck with wedges so that the truck does not roll away.

– Contact your authorised service centre.

On level ground:

⚠ WARNING

Risk of accident!

The truck may decelerate abruptly.

– Fasten the seat belt.

– Activate the available restraint systems.

⚠ WARNING

There is no electrical braking assistance when the key switch is switched off!

Switching off the key switch will de-energise the entire electrical system. The regenerative brake will not be available.

⚠ CAUTION

There is no power steering when the key switch is switched off!

The truck is equipped with hydraulic power steering. Switching off the key switch shuts down the hydraulics completely. Steering forces are increased by the remaining emergency steering function.

– Steer with a higher level of force.

– Find a sufficiently large, open area in which nobody will be obstructed.
– Accelerate the truck to walking speed.
– Use the key switch to switch off the engine.
– Apply the parking brake.

The truck must decelerate and remain stationary.

If the truck only coasts and does not decelerate or decelerates only slightly:

– Secure the truck using the service brake.
– Secure the truck with wedges so that the truck does not roll away.
– Contact your authorised service centre.

Checking the regenerative brake ▷

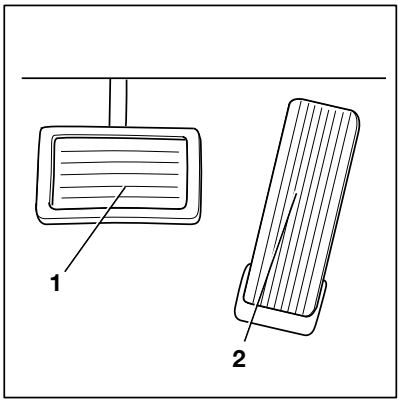

⚠ DANGER

Risk of accident due to reduced braking power!

The regenerative brake may not be sufficient for emergency braking.

– Always actuate the brake pedal (1) for emergency braking.

If the driving speed is restricted or if the opposite drive direction is selected, the truck brakes electrically.

– Release the accelerator pedal (2).

– The truck must brake to a standstill.

Checking the steering system for correct function ▷

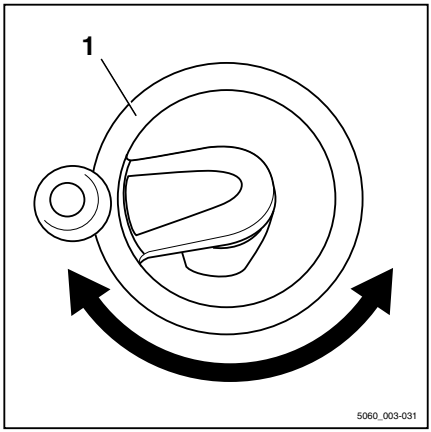

⚠ DANGER

If the hydraulics fail, there is a risk of accident as the steering characteristics have changed.

– Do not operate the truck if it has a defective steering system.

– Operate steering wheel (1). The steering play while stationary must not be more than two finger widths.

NOTE

If the truck is switched on with the steering wheel turned, the maximum driving speed is limited. Travel speed limitation is removed as soon as the steering wheel is moved out of a cornering position into the straight-ahead position. This requires a change in steering angle of about half a revolution.

Checking the emergency off function

NOTE

Only diesel trucks with a particle filter system (variant) or a joystick 4Plus (variant) have an emergency off switch.

⚠ WARNING

No electric braking assistance is available when the emergency off switch is actuated!

Actuating the emergency off switch will de-energise the entire electrical system.

– To brake, actuate the service brake.

– Slowly drive the truck forwards.

– Press the emergency off switch (1). ▷

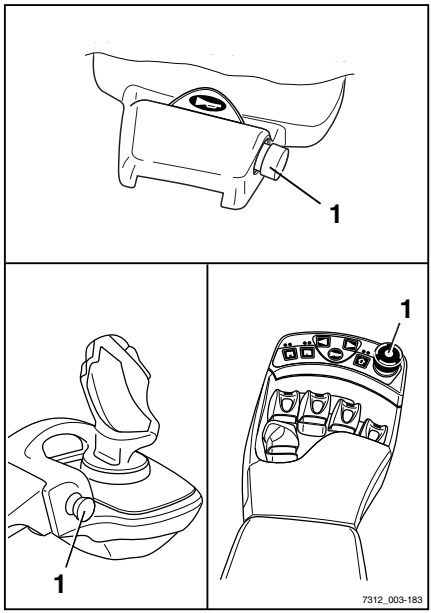

The truck will coast

– Brake the truck to a standstill by actuating the brake pedal.

NOTE

In trucks with an electric parking brake, the electric parking brake will be applied as soon as the truck comes to a stop.

– Pull out the emergency off switch (1).

The knob is unlocked and pops out. The truck performs an internal self-test and is then ready for operation again.

Zero adjustment of the load measurement (variant)

NOTE

A zero adjustment must be carried out in order to guarantee the accuracy of the load measurement (variant) at all times. Zero adjustment is required.

- *Before daily use*
- *After changing the fork arms*
- *After fitting or changing attachments*

NOTE

Accurate zero adjustment is only possible if the fork is not carrying a load. Do not take up a load yet

NOTE

Accurate zero adjustment is only possible within the first lifting stage of the lift mast. When carrying out the zero adjustment, do not raise the fork more than 800 mm above the ground.

NOTE

The way in which the lifting system is operated depends on the operating devices included in the truck's equipment; see the chapter entitled "Lifting system operating devices".

– Set the lift mast to vertical.

– Raise the fork to a height of 300-800 mm.

– Press and hold the Softkey for the "zero adjustment" (1) for at least four seconds. ▷

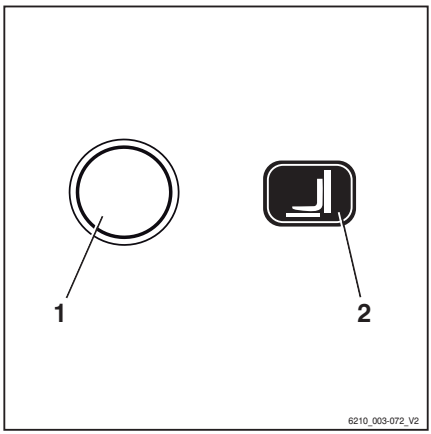

The zero adjustment of the load measurement is switched on. The symbol (2) is displayed.

NOTE

During the following process, the fork carriage must be lowered slightly and then stopped abruptly. While doing so, the fork must not touch the ground; otherwise, the zero adjustment will not be accurate. To stop the lowering procedure quickly and cause the operating device to move to the zero adjustment, release the operating device to lower.

– Lower the fork carriage slightly and release the operating device.

When the zero adjustment has been carried out correctly, the value "0 kg" appears on the display.

– The zero adjustment of the load measurement is completed.

Checking the vertical lift mast position (variant) for correct function

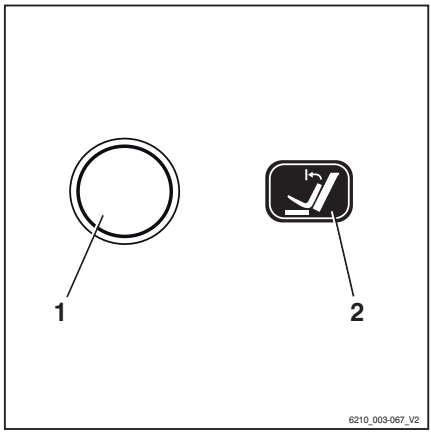

NOTE

The function check of the lift mast vertical position (variant) must be carried out every time a truck is commissioned.

– Press the Softkey (1).

The comfort feature "lift mast vertical position" is switched on. The symbol (2) is displayed.

– Tilt the lift mast backwards.

The lift mast must tilt back fully and move gently as far as the end stop.

– Tilt the lift mast forward.

The lift mast must tilt forwards and stop in the vertical position.

– Release the operating device to tilt and actuate again.

The lift mast must tilt forwards fully and move gently as far as the end stop.

Cleaning the dust valve

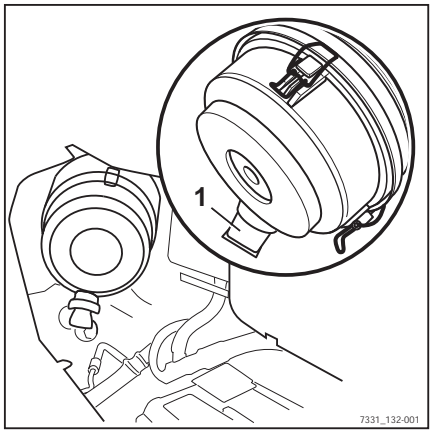

– Open the service flap on the right-hand side under the driver's cab; see ⇒Chapter "Opening the side service flap", Page 325 .

– Press the dust valve (1) on the air filter housing between your fingers until no more dust is emitted.

– Close the service flap on the right-hand side under the driver's cab again; see ⇒Chapter "Closing the side service flap", Page 326 .

Operating the display-operating unit

Displays

Standard display elements

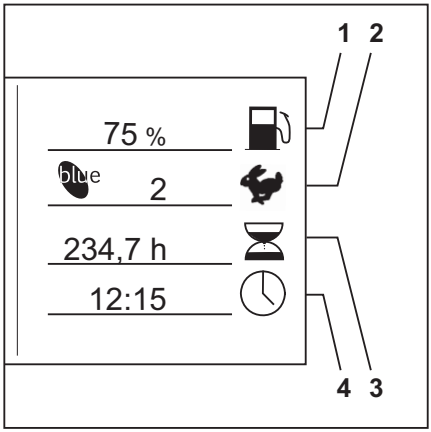

In the factory setting, the following indicators can be seen in the display and operating unit:

1 **Fuel level**
Shows the fuel level in the fuel tank in %.

2 **Drive programme**
Displays the current drive programme numerically (1-5). The drive programme can be changed; see the chapter entitled "Setting the drive programme".

3 **Operating hours**
Displays the total operating hours completed by the truck. The hour meter operates as soon as the engine is started.

4 **Time**
Displays the current time digitally in hours and minutes. The time can be adjusted; see the chapter entitled "Setting the time".

Additional indicators

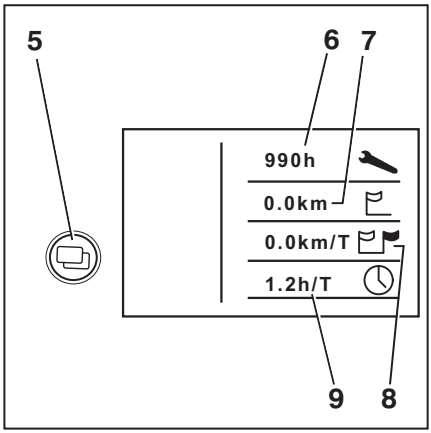

- **Menu change button**
  When the menu change button is pressed, the following additional indicators appear:
- **"Service in" indicator**
  Displays the remaining time in hours until the next service work has to be carried out according to the maintenance schedule in the maintenance instructions. Contact the authorised service centre in good time.
- **Total distance**
  Displays the total distance driven in kilometres.
- **Daily kilometres**
  Displays the kilometres driven for the day.
- **Daily driving time**
  Displays the hours driven for the day.

Adjusting the displays

NOTE

The parking brake must always be engaged when you adjust the displays. The displays cannot be adjusted if the parking brake is not engaged.

NOTE

When adjusting the displays, do not actuate the hydraulic system operating devices. If you do, entry is interrupted and the display returns to the operating display.

The displays are adjusted in the `CONFIGURATION` menu.

– Turn the key switch to position "I".

– Press the drive program button (1) and the menu change button (2) at the same time. ▷

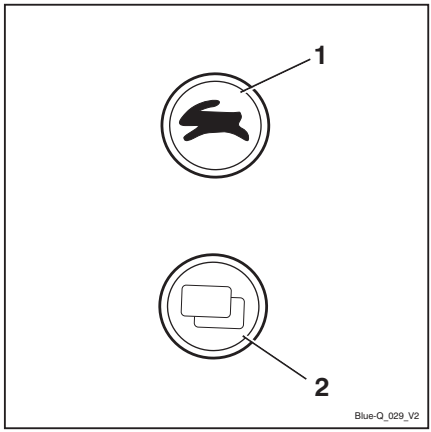

The display changes to the PASSWORD menu. ▷

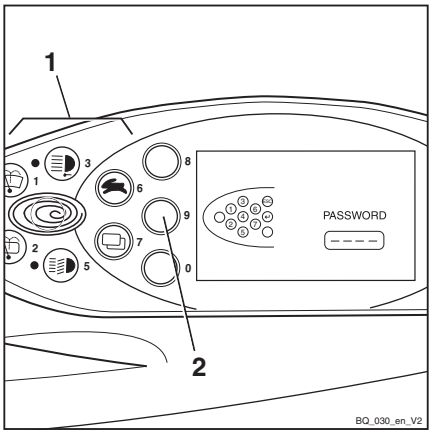

NOTE

It may be necessary to enter a password in order to configure the displays. This depends on the configuration of the display-operating unit.

- *For configuration of the display-operating unit, contact the authorised service centre*

– Press the Softkey ↵ (3). ▷

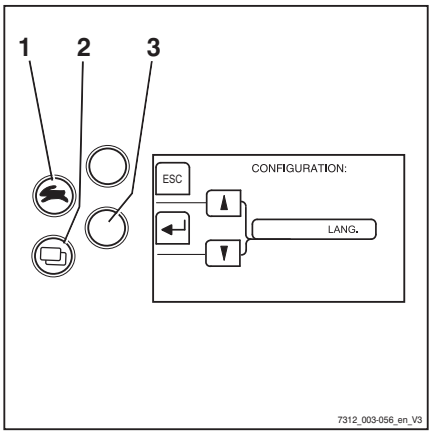

The display changes to the CONFIGURATION menu.

The following settings are possible and can be found in the corresponding chapter:

- Setting the date and time
- Resetting the daily kilometres and daily operating hours
- Setting the language
- Configure Blue-Q

Symbols in the display

Messages

To show operating messages, warning messages or error messages in the display, text messages and symbols are used.

Symbols for operating messages

Description	Symbol
Empty field	No display
Please wait	
Service required	
Lift limitation	
Reference cycle	
Battery charging	
Drive program	
Hour meter	
Odometer	
Daily hour meter	
Daily odometer	
Speed	
Steering angle	
Load	
Time	
Hydraulic system	
Exh.gas purifier	
Coolant temperature	
Fuel level	
Blue-Q	
Power rating (average)	
Power rating (trend)	

Symbols for warning messages

Description	Symbol
Parking brake	
Actuate seat switch	
Safety belt	
Battery acid level	
Neutral warning message	
Are you sure?	?
Oil pressure	

Symbols for error messages

Description	Symbol
Brake system malfunction	
Overheating of the engine	
Overheating	
Malfunction in the electrical system	
General malfunction	

Symbols for softkey functions of auxiliary equipment

The following symbols for softkey functions are used on the left of the display for auxiliary equipment:

Description	Symbol
Empty field	No display
General function OFF	F1 F2 F3
General function **ON**	F1 F2 F3
Rear working spotlight OFF	
Rear working spotlight **ON**	
Front working spotlight OFF	
Front working spotlight **ON**	
Windscreen heating OFF	
Windscreen heating **ON**	
Rear window heating OFF	
Rear window heating **ON**	
Interior lighting OFF	
Interior lighting **ON**	
Roof wiper/washer OFF	
Roof wiper/washer **ON**	
Heater blower OFF	
Heater blower **ON**	
Rotating beacon OFF	
Rotating beacon **ON**	
Seat heater OFF	
Seat heater **ON**	
Signal horn OFF	
Signal horn **ON**	
Cruise control OFF	
Cruise control **ON**	
Automatic mast vertical positioning OFF	

Description	Symbol
Automatic mast vertical positioning **ON**	
Load measurement zero adjustment OFF	
Load measurement zero adjustment **ON**	
Load measurement OFF	
Load measurement **ON**	

Symbols for softkey functions for menu navigation and for acknowledging messages

The following symbols for the softkey functions are used on the left of the display for menu navigation and to acknowledge messages:

Description	Symbol
Empty field	No display
Cancel input	ESC
Confirm input	
Confirm information	
Reset	RES
Back by one menu level	
Back to the previous edit field	
Scroll up	
Scroll down	
Count up	+
Count down	−

Status LEDs of the function keys for additional electrical installations

The current switch status of a button is indicated with LEDs next to the relevant function key for the additional electrical installation.

Description	LED
Function off	LED **OFF**
Function on	LED **ON**

Symbols for numeric keypad

The buttons and Softkeys that can be used to enter numbers and to cancel or confirm input values are shown in the display.

Operating the display-operating unit

Screen for entering the fleet manager password: ▷

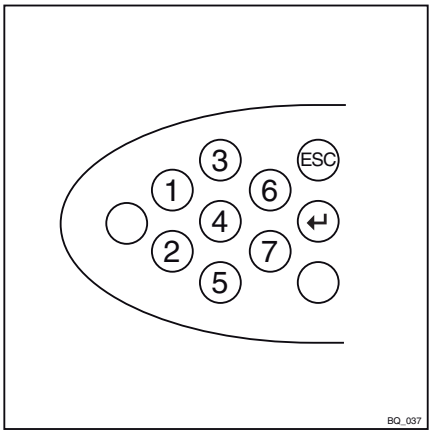

Screen for entering the driver PIN (access code): ▷

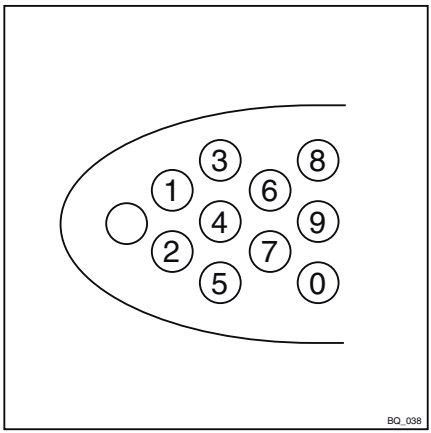

Setting the date or time

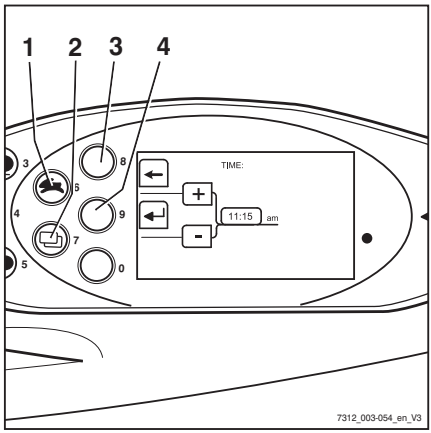

– Switch to the CONFIGURATION menu; see the chapter entitled "Adjusting the displays".

– Press the Drive programme button (1) or the Menu change button (2) repeatedly until the TIME option appears.

– Confirm your selection using the Soft-key ↵ (4).

The TIME menu appears.

– Press and hold down the Drive programme button (1) or Menu change button (2) until the desired time appears on the display.

As the buttons are held down for longer, the scrolling speed increases in three levels.

– Confirm the set time using Softkey ↵ (4).

– Use the Softkey ← (3) to exit the menu and return to the next level up.

NOTE

The date is set in a similar manner.

Resetting the daily kilometres and daily operating hours

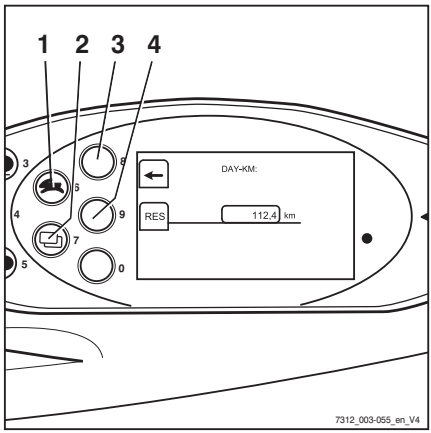

The daily number of kilometres and daily operating hours displays can be reset to zero:

– Switch to the CONFIGURATION menu; see the chapter entitled "Adjusting the displays".

– Press the Drive programme button (1) or the Menu change button (2) repeatedly until the DAY KM option appears.

– Confirm your selection using the Soft-key ↵ (4).

The DAY KM menu appears.

– Reset the displayed mileage using Soft-key RES (4).

– Use the Softkey ← (3) to exit the menu and return to the next level up.

NOTE

The daily operating hours are reset in the same manner.

Setting the language

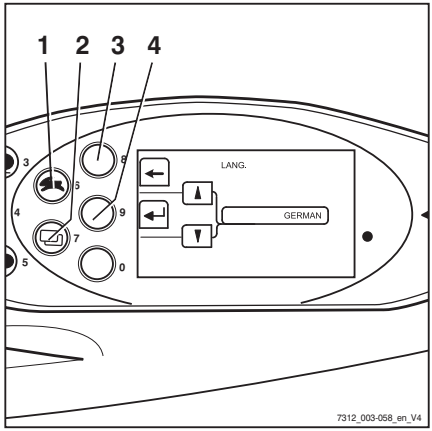

The displays can be shown in additional languages:

– Switch to the CONFIGURATION menu; see the chapter entitled "Adjusting the displays".

– Press the drive programme button (1) or the menu change button (2) repeatedly until the LANGUAGE option appears.

– Confirm your selection using the Softkey ↵ (4).

The LANGUAGE menu appears.

– Press drive program button (1) or menu change button (2) until the desired language appears in the display.

– Confirm your selection using the Softkey ↵ (4).

– Use the Softkey ← (3) to exit the menu and return to the next level up.

Softkeys for operating various equipment variants

Additional functions can be displayed on the display-operating unit. These additional functions, e.g. a rotating beacon, can be switched on and off using Softkeys.

Changing the Softkey functions:

A grey bar (3) highlights the Softkey column. This is the right-hand column in the example shown here. These additional functions can now be switched on and off via the corresponding Softkeys (2). The right-hand column is only populated with additional functions if the truck has more than three equipment variants that can be switched on and off using Softkeys.

In this case, proceed as follows to switch between the two columns:

– Briefly press the Menu change button (1).

The grey bar jumps to the left-hand column. These additional functions can now be switched on and off via the corresponding Softkeys (2).

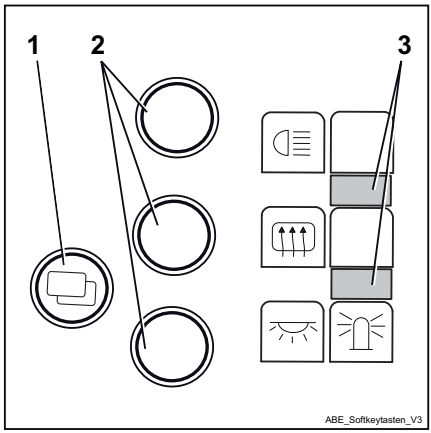

NOTE

Press the Menu change button (1) for approx. 1 second to switch between the individual menus on the display-operating unit.

NOTE

The additional functions depend on the individual equipment of the truck and may vary from those shown here.

Configuring Blue-Q efficiency mode

The following operating modes can be selected to activate the Blue-Q efficiency mode:

STANDARD

- Blue-Q is turned off whenever the truck is commissioned. The driver can use the Blue-Q button to switch efficiency mode on and off at any time while the truck is being operated

FIXED

- Blue-Q is switched on permanently whenever the truck is commissioned and during truck operation. The driver cannot turn efficiency mode off

FIXED-FLEX

- Blue-Q is turned on whenever the truck is commissioned. The driver can use the Blue-Q button to switch efficiency mode on and off at any time while the truck is being operated

– Switch to the CONFIGURATION menu; see ▷ the chapter entitled "Adjusting the displays".

– Keep pressing the drive programme button (1) or the menu change button (2) until option BLUE Q CONFIGURATION appears.

– Confirm your selection with Softkey ↵ (4).

The BLUE-Q CONFIGURATION menu appears.

– Press drive program button (1) or menu change button (2) until the desired efficiency mode appears in the display.

– Confirm the set efficiency mode using Softkey ↵ (4).

– Use the Softkey ← (3) to exit the menu and return to the next level up.

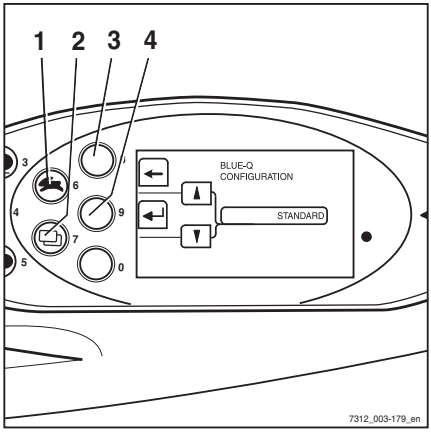

Shock recognition (variant)

The shock recognition is an equipment variant of the FleetManager (variant) in which an acceleration sensor is installed in the truck. The acceleration sensor records data arising from rapid accelerations or decelerations of the truck, e.g. in the event of an accident. This data can be electronically read out and evaluated.

– If you have any questions, please contact your authorised service centre.

Additional settings

By entering a password, it is possible to set or find other values. The values must only be changed by your service centre.

Switching on and starting

Switching on the key switch

⚠ WARNING

Before switching on the key switch, all tests prior to start-up must be performed without detecting any defects.

- Perform the tests prior to commissioning.
- Do not operate the truck if defects have been detected
- Notify the authorised service centre.

- Insert the switch key (1) into the key switch and turn to position "I" ▷

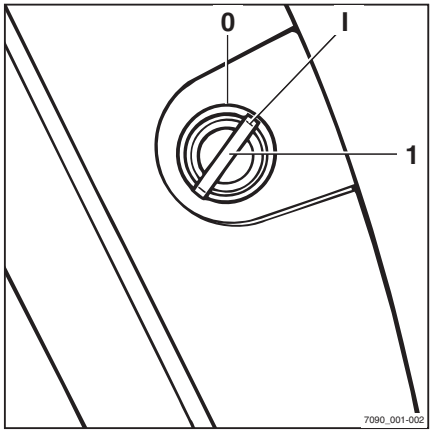

This initiates a self-test. All lamps in the drive direction and turn indicator displays light up briefly. ▷

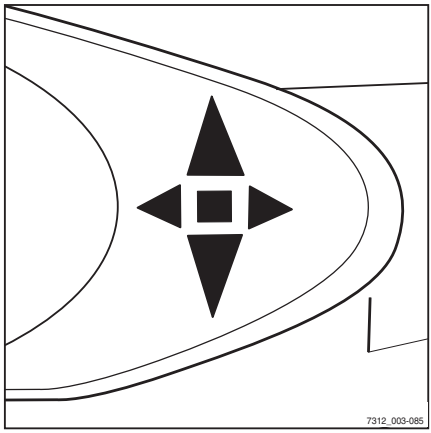

When the key switch is switched on, the display shows the welcome screen in the set language until the truck controls have completely started up.

If the truck has the "access authorisation with PIN code" variant, the display initially changes to the input menu for access authorisation.

If the truck is ready for operation, the standard displays are shown.

Standard display elements

In the factory setting, the following indicators can be seen in the display and operating unit:

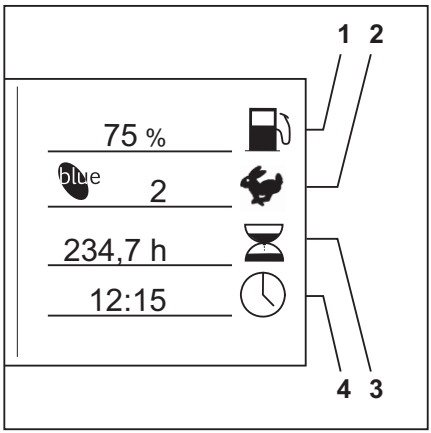

1 **Fuel level**
Shows the fuel level in the fuel tank as a percentage (%).

2 **Drive programme**
Displays the current drive programme numerically (1-5). The drive programme can be changed; see the chapter entitled "Setting the drive programme".

3 **Operating hours**
Displays the total operating hours completed by the truck. The hour meter operates as soon as the engine is started.

4 **Time**
Displays the current time digitally in hours and minutes. The time can be adjusted; see the chapter entitled "Setting the time".

⚠ CAUTION

Lack of fuel can cause malfunctions!

If the fuel tank has been run empty, the fuel injection system can draw in air bubbles. This can lead to malfunctions in the fuel injection system.

– Never run the fuel tank empty.

NOTE

Additional information may appear on the display.

- *Refer to the information in the chapter entitled "Display messages".*

Starting the engine

DANGER

Risk to health from exhaust gases!

Exhaust gases from internal combustion engines are harmful to your health. In particular, the soot particles contained in the diesel exhaust gas can cause cancer.

When the internal combustion engine is running, there is a risk of poisoning from the CO, CH and NOx components contained in the exhaust gas.

Modern exhaust gas treatment systems (e.g. catalytic converters, particle filters or comparable systems) can clean exhaust gases in a way that reduces the health hazard and risk of poisoning when operating the truck.

– Observe the national laws and regulations when using trucks with an internal combustion engine in entirely or partially enclosed working areas.

– Always ensure sufficient ventilation.

– Apply the parking brake.

– Insert the switch key (1) into the key switch and turn to position "I" ▷

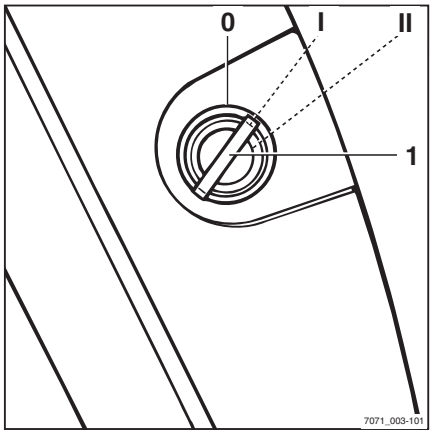

The truck controller starts, see the section entitled "Switching on the key switch".

– Turn the key switch to position "II" and hold there until the engine starts.

– Release the key switch as soon as the engine has started.

If the engine does not start after 20 seconds, stop the starting procedure and repeat after one minute.

⚠ CAUTION

Risk of engine damage!

If the `OIL PRESSURE` message appears on the display after starting the motor, there may be insufficient engine lubrication. Insufficient lubrication may cause engine damage.

- Immediately switch off the engine.
- Check the engine oil level and top up if necessary.
- If the message continues to appear, notify the authorised service centre.

- Refer to the information in the chapter entitled "Display messages".

NOTE

If the engine does not start due to a discharged battery, it can be jump-started.

NOTE

If the truck is left turned off for a lengthy period in ambient temperatures below -5°C, the truck will need to pre-heat at the next start-up. The message `GLOW` *flashes on the display. Preheating can take up to 22 seconds. If the message* `START` *is displayed, start the engine.*

Lighting

Switching the lighting on and off

NOTE

All of the lighting described below can be retrofitted by the authorised service centre.

Drive lighting

– To switch on the parking light, press the button (1).

The front sidelights and the tail lights light up. On the variant with StVZO (German Road Traffic Licensing Regulations) equipment, the licence plate lamp also lights up.

– To switch on the headlights, press the button (1) again.

The headlights light up in addition to the parking light.

– To switch off the driving lights, press the button (1) again.

The driving lights go out.

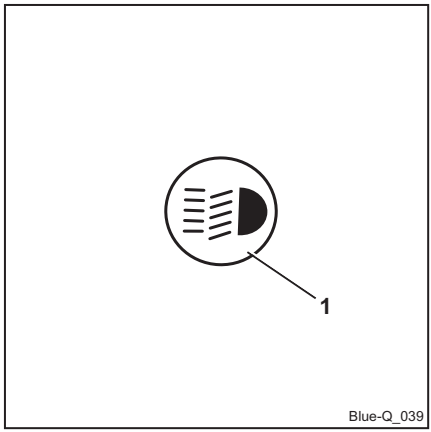

Working spotlight

– To switch on the working spotlights (front and rear), press the button (1).

The working spotlights light up.

– To switch off the working spotlights, press the button (1) again.

The working spotlights go out.

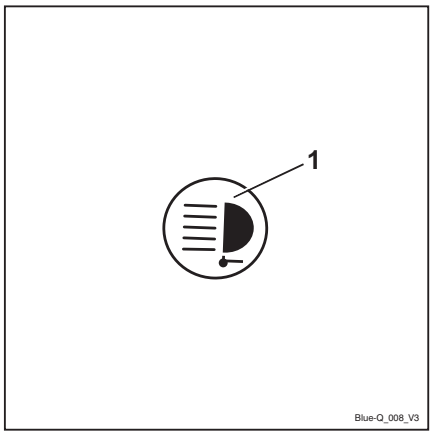

NOTE

In trucks with StVZO (German Road Traffic Licensing Regulations) equipment (variant), the following lighting elements on the truck are also activated when the working spotlights are switched on:

- *Tail lights*
- *Licence plate lamp*
- *Sidelights*

Switching the working spotlight for reverse travel on and off

The working spotlight for reverse travel is attached to the overhead guard at the rear. It provides optimal illumination of the roadway if the truck is travelling in reverse.

– Press the softkey (1).

The symbol (2) is displayed. The rear working spotlight does not yet illuminate.

– Set the drive direction to "Reverse".

The rear working spotlight illuminates.

NOTE

If the drive direction is set to "Forwards", the rear working spotlight goes out.

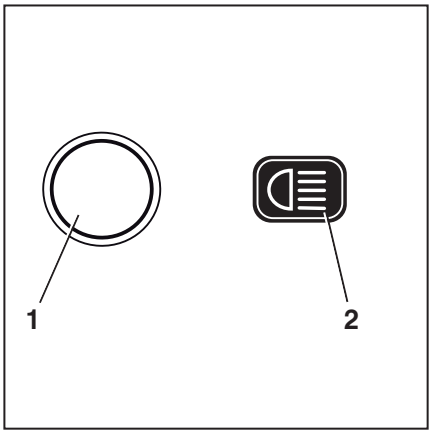

Switching the turn indicators on and off

– To switch on the left or right turn indicator, push the turn indicator switch (1) to the desired direction.

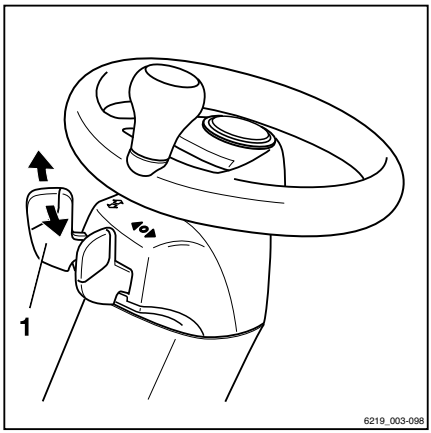

The turn indicators and the turn indicator display (2) or (3) on the display-operating unit flash.

– To switch off, push the turn indicator switch to the centre position.

The turn indicators and the turn indicator displays on the display-operating unit stop flashing.

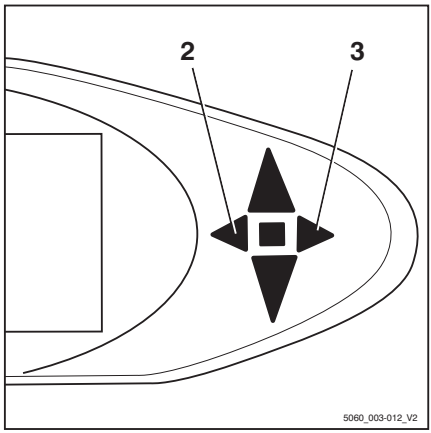

Switching the hazard warning system on and off

– To switch on the hazard warning system, press the button (1).

All turn indicators and indicator lights (2) flash.

– To switch off the hazard warning system, press the button (1) again.

The hazard warning system goes out.

NOTE

To switch on the hazard warning system without the key switch being switched on, press and hold the button for three seconds.

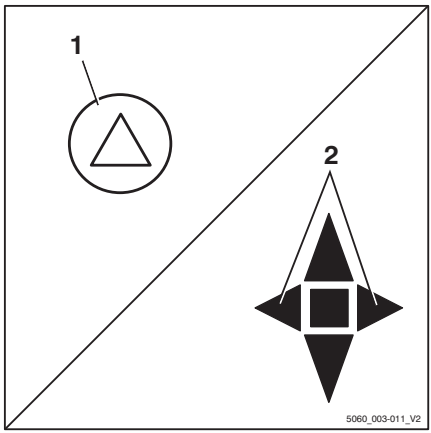

Switching the rotating beacon on and off

– Press the Softkey (1) to switch on the rotating beacon. ▷

The rotating beacon is switched on. The symbol is displayed.

– To switch off the rotating beacon, press the Softkey .

The rotating beacon goes out. The symbol (2) is displayed.

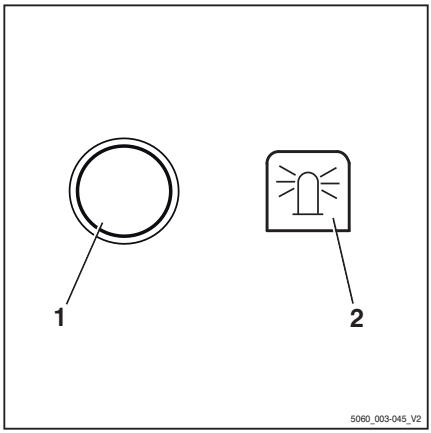

Switching the double working spotlights on and off. ▷

The double working spotlights are fitted up on the front right and left on the overhead guard. Each double working spotlight consists of an upper working spotlight (2) and a lower working spotlight (3). The upper working spotlight illuminates the working area at great lift heights, the lower working spotlight illuminates the working area directly in front of the truck.

Depending on the equipment, the upper working spotlights can be switched on/off automatically or manually.

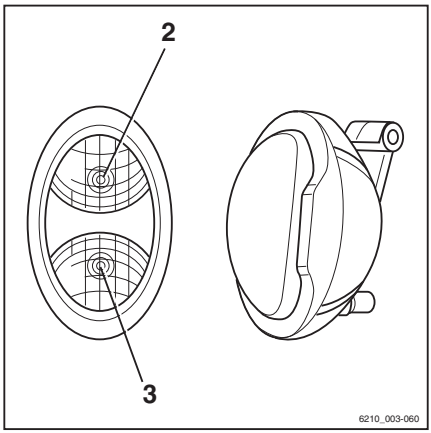

Switching the upper working spotlights on/off manually

NOTE

The upper working spotlights can be switched on/off independently of the lower working spotlights. For information about switching on the lower working spotlights, see the section entitled "Switching the lighting on and off".

NOTE

This function is not available if the truck is equipped with rear window heating.

– Turn the key switch to position "I".

– Press Softkey (1) to switch on the working spotlights. ▷

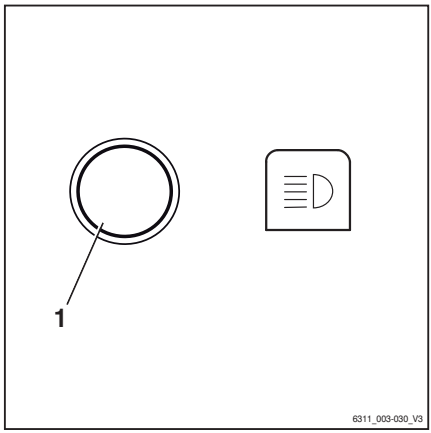

The working spotlights are switched on. The symbol is displayed.

– Press Softkey to switch off the working spotlights.

The working spotlights are switched off. The symbol is displayed.

Switching the upper working spotlights on/off automatically

– Turn the key switch to position "I".

– For information about switching on the working spotlights, see the chapter entitled "Switching the lighting on and off".

The lower working spotlights light up.

The upper working spotlights are switched on automatically when the lift mast is lifted for a period of at least two seconds.

NOTE

During these two seconds, a maximum of two lifts can be executed to prevent the working spotlights from switching on each time a precise adjustment is made. If more lifts are carried out during this time, the upper working spotlights will remain switched off.

NOTE

The upper working spotlights are switched off automatically when the truck is driven for longer than one second at a speed faster than 2.1 km/h.

Lift-height-controlled switching on/off of the upper working spotlights

NOTE

This equipment is available only if a proximity switch is fitted to the lift mast to record a particular lift height of the fork carriage on the lift mast.

– Turn the key switch to position "I".

– Switch on the working spotlights.

The lower working spotlights light up.

The upper working spotlights are switched on by the proximity switch when the fork carriage reaches or exceeds the preset lift height.

The upper working spotlights are switched off by the proximity switch when the fork carriage falls below the preset lift height again.

CAUTION

Possible component damage caused by collision if the proximity switch is set incorrectly.

– The proximity switch may be adjusted by trained personnel.

– If necessary, inform the authorised service centre.

STILL SafetyLight (variant) ▷

WARNING

Danger of damage to eyes from looking into the STILL SafetyLight.

Do not look into the STILL SafetyLight.

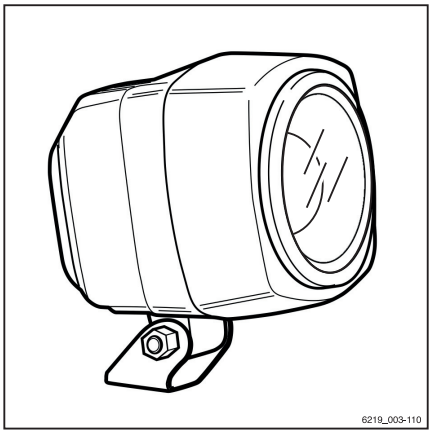

The STILL SafetyLight is a visual warning unit designed to enable early detection of trucks in driving areas with low visibility (such as drive lanes, high racks), as well as at blind junctions. The STILL SafetyLight is mounted on a support on the overhead guard such that it is not affected by jolts and vibrations. The STILL SafetyLight projects one or more light-blue light spots in front of or behind the truck and thus warns others about the approaching truck. Several light spots are projected as a

chase light. The chase light indicates the location of the truck with its direction of travel.

Depending on the configuration of the truck, the STILL SafetyLight automatically switches itself on when the truck is moving. The STILL SafetyLight can also be switched on and off on the display-operating unit.

– To do so, press the corresponding button.

NOTE

If the truck is to be operated on public roads, the STILL SafetyLight must be switched off.

Blue-Q efficiency mode

Functional description

The Blue-Q efficiency mode affects both the drive unit and the activation of the additional consumers, and reduces the truck's energy consumption.

If the efficiency mode has been activated, the acceleration behaviour of the truck changes to make acceleration more moderate.

When travelling at low speeds—normally when manoeuvring—no reduction is noticeable despite the activated efficiency mode. For moderate speeds of at least approx. 7 km/h, acceleration is gentler. Therefore, on distances of up to approx. 40 m, lower speeds are reached than would be the case if the efficiency mode was not activated.

Blue-Q has no influence on:

- Maximum speed
- Climbing capability
- Traction
- Braking characteristics

NOTE

The Blue-Q efficiency mode can be switched on and off in the `STANDARD` *and* `FIXED-FLEX` *operating modes. If the* `FIXED` *operating mode is configured in the display operating unit, the Blue-Q button has no function and the Blue-Q efficiency mode is switched on permanently; see also chapter "Configuring Blue-Q efficiency mode".*

Switching off additional consumers

If the Blue-Q efficiency mode is activated, the controller switches off various additional consumers after a few seconds in certain conditions. The additional consumers available depend on the truck equipment. The following table shows the conditions that cause additional consumers to be switched off. Only one of the conditions listed must be met.

Additional consumers	Condition		
	Seat switch not actuated	Truck stopped	Truck is in motion
Front working spotlights	X	X	Backwards > 3 km/h
Rear working spotlights	X	X	Forwards
Top double working spotlight	X	X	> 3 km/h
Headlights	X	X	-
Front wiper	X	X	Backwards > 3 km/h
Rear wiper	X	X	Forwards
Seat heater	X	-	-
Cab heating	X	-	-

NOTE

On the version with StVZO (German Road Traffic Licensing Regulations) equipment, the Blue-Q efficiency mode does not switch off the lighting devices headlights and working spotlights, side lights, rear lights and license plate lamps.

Switching efficiency mode Blue-Q on and off

NOTE

The Blue-Q efficiency mode can be switched on and off in the `STANDARD` *and* `FIXED-FLEX` *operating modes. If the* `FIXED` *operating mode is configured in the display-operating unit, the Blue-Q button is disabled and the Blue-Q efficiency mode is switched on permanently. For information on configuring the Blue-Q operating modes, see the "Configuring Blue-Q efficiency mode" section.*

– Press the Blue-Q button (2) to switch on Blue-Q. ▷

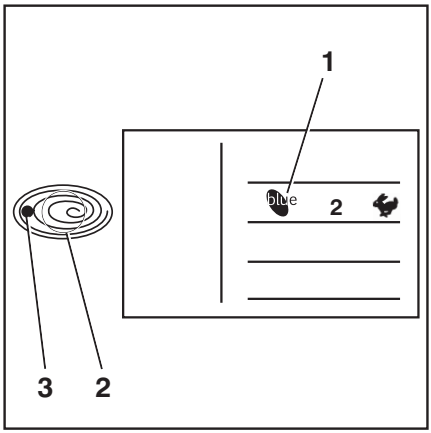

The Blue-Q symbol (1) is displayed. The LED (3) illuminates in blue. Blue-Q efficiency mode is switched on.

– To switch it off, press the Blue-Q button (2) again.

The Blue-Q symbol (1) and the LEDs (3) go out. Blue-Q efficiency mode is switched off.

Driving

Safety regulations when driving

Driving conduct

The driver must follow the public rules of the road when driving in company traffic.

The speed must be appropriate to the local conditions.

For example, the driver must drive slowly around corners, in tight passageways, when driving through swing-doors, at blind spots, or on uneven surfaces.

The driver must always maintain a safe braking distance from vehicles and persons in front, and must always have the truck under control. Stopping suddenly, turning quickly and overtaking at dangerous or blind spots must be avoided.

– Initial driving practice must be carried out in an empty space or on a clear roadway.

The following are forbidden during driving:

- Allowing arms and legs to hang outside the truck
- Leaning the body over the outer contour of the truck
- Climbing out of the truck
- Moving the driver's seat
- Adjusting the steering column
- Releasing the seat belt
- Disabling the restraint system
- Raising the load higher than 300 mm above the ground (with the exception of manoeuvring processes during the placement into stock/removal from stock of loads)
- Using electronic devices, for example radios, mobile phones etc.

⚠ WARNING

The use of multimedia and communication equipment as well as playing these devices at an excessive volume during travel or when handling loads can affect the operator's attention. There is a risk of accident!

– Do not use devices during travel or when handling loads.

– Set the volume so that warning signals can still be heard.

⚠ WARNING

In areas where use of mobile phones is prohibited, use of a mobile phone or radio telephone is not permitted.

– Switch off the devices.

Visibility when driving

The driver must look in the drive direction and have a sufficient view of the driving lane.

Particularly for reverse travel, the driver must be sure that the driving lane is clear.

When transporting goods that impair visibility, the driver must drive the truck in reverse.

If this is not possible, a second person acting as a guide must walk in front of the truck.

In this case the driver must only move at walking pace and with extra care. The truck must be stopped immediately if eye contact with the guide is lost.

Rear-view mirrors are only to be used for observing the road area behind the truck and not for reverse travel. If visual aids (mirror, monitor) are necessary to achieve sufficient visibility, it is necessary to practise using them. For reverse travel using visual aids, extra care should be taken.

When using attachments, special conditions apply; see the chapter entitled "Fitting attachments".

Any glass (variant, e.g. windscreen) and mirrors must always be clean and free of ice.

Roadways

Dimensions of roadways and aisle widths

▷

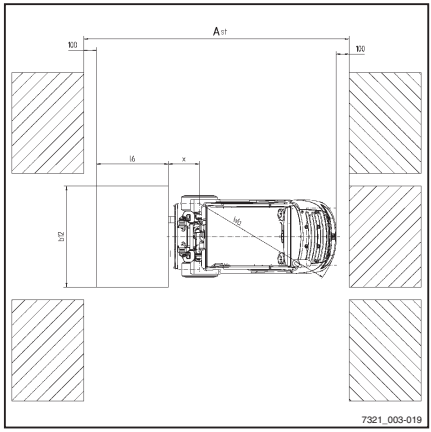

The following dimensions and aisle width requirements apply under the specified conditions to ensure safe manoeuvring. In each case, it must be checked whether a larger aisle width is necessary, e.g. in the case of different load dimensions.

Within the EU, Directive 89/654/EEC (minimum safety and health requirements for the workplace) must be observed. The respective national guidelines apply for areas outside the EU.

The required aisle widths (Ast) depend on the dimensions of the load. For pallets, these are as follows:

Aisle width (mm)	with pallet 1000 x 1200 crosswise	with pallet 800 x 1200 lengthwise
RX70-40	3912	4112
RX70-45	3942	4142
RX70-50	4037	4237

The truck may only be used on roadways that do not have excessively sharp bends, excessively steep gradients or excessively narrow or low entrances.

Driving on gradients

⚠ WARNING

Driving up and down longer gradients may cause the drive unit to overheat and switch off.

Driving up and down longer gradients greater than 15% is not permitted due to the minimum specified braking values. The climbing capability values given below apply only to overcoming obstacles on the roadway and to short differences in level, e.g. ramps.

⚠ CAUTION

To ensure safe use of the truck with or without a load, driving on gradients greater than 15% is not permitted.

If in doubt, contact the authorised service centre.

NOTE

The values specified in the following table must be used only to compare the performance of forklift trucks in the same category. The gradient values in no way represent the normal daily operating conditions.

Max. gradient in %	with load	without load
RX70-40	29	26
RX70-45	29	26
RX70-50	25	23

The ascending and descending gradients must not exceed the gradients listed above and must have a rough surface.

Smooth and gradual transitions should be provided at the top and bottom of the gradient to prevent the load from falling to the ground or the truck being damaged.

Warning in case components project beyond the truck contour

Trucks are often required to drive through very narrow or very low spaces such as aisles or containers. The dimensions of the trucks are designed for this purpose. However, movable parts may project beyond the truck contour and be damaged or torn off. Examples of these components are:

- A folding roof panel in the driver's cab
- Cab doors
- Folding LPG cylinders

Condition of the roadways

Driveways must be made sufficiently firm, and be level and free of dirt and fallen objects.

Drainage channels, level crossings and similar obstacles must be evened out so that trucks can drive over these obstacles with as few bumps as possible. If necessary, ramps must be provided for these obstacles.

Ensure that manhole covers, drain covers etc. offer a sufficient load capacity.

There must be sufficient distance between the highest points of the truck or the load and the fixed elements of the surrounding area. The

height is based on the overall height of the lift mast and the dimensions of the load. Observe the technical data (see ⇒Chapter "Technical data", Page 355).

Rules for roadways and the working area

It is only permitted to drive on routes authorised for traffic by the operating company (see ⇒Chapter "Definition of terms used for responsible persons", Page 24) or its representatives. Traffic routes must be free of obstacles. The load must only be set down and stored in the designated locations. The operating company and its representatives must ensure that unauthorised third parties keep away from the working area.

Hazard areas

Hazardous areas on the roadways must be marked by standard traffic signs or, if necessary, by additional warning signs.

Setting the drive programmes ▷

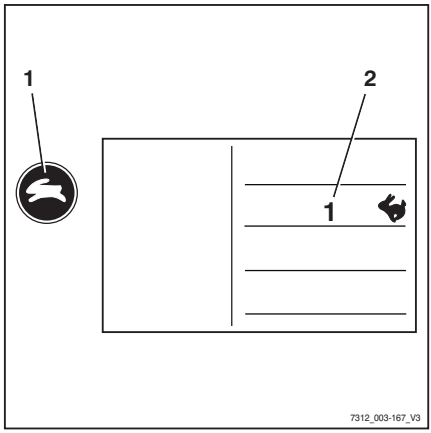

The driving and braking characteristics of the drive can be set on the display and operating unit.

– Push the drive programme button (1) repeatedly until the number of the desired drive programme appears on the display (2).

Drive programs 1–5 are available.

Essentially, the higher the drive program number is, the greater the driving dynamics.

NOTE

On some trucks, the speed (forwards/backwards) is restricted as a variant.

The following settings are possible:

Drive program	1	2	3	4	5
Speed (km/h)	21	21	21	21	21
Acceleration (%) (forwards/backwards)	50	100	120	140	160
Deceleration (%) (forwards/backwards)	50	100	120	140	160
Reversing (%) (forwards/backwards)	50	100	120	140	160
Brake retardation (%) (electric brake booster)	80	90	100	100	100

Actuating the vertical rocker button for the "drive direction", Joystick 4Plus version ▷

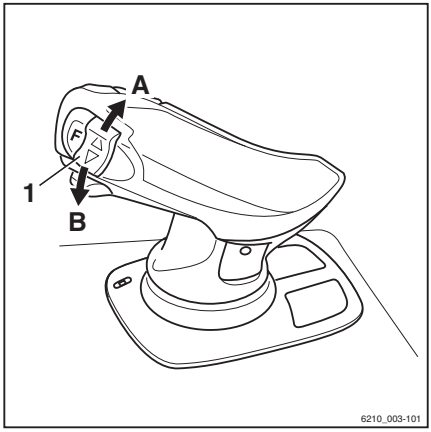

– For the "forward" drive direction, push the vertical rocker button for the "drive direction" (1) upwards (A).

– For the "backward" drive direction, push the vertical rocker button for the "drive direction" (1) downwards (B).

NOTE

If the drive direction switch (1) is defective and the truck stops in a danger area, the drive direction selection lever on the travel direction selector and indicator module (variant) can be used for emergency driving. Refer to the section entitled "Emergency driving via the drive direction switch/drive direction selection lever" in the chapter entitled "Procedure in emergencies".

Actuating the drive direction switch with the mini-lever version

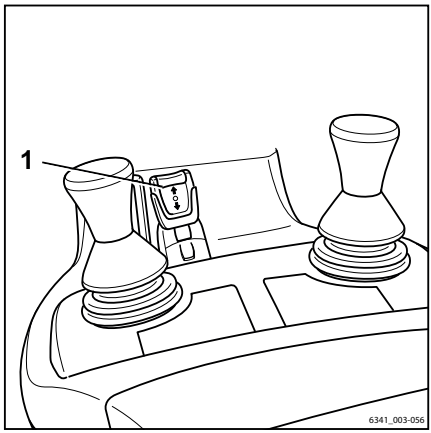

- For the "forwards" drive direction, push the drive direction switch (1) forwards.
- For the "backward" drive direction, pull the drive direction switch (1) backward.

NOTE

If the drive direction switch (1) is defective and the truck stops in a danger area, the drive direction selection lever on the travel direction selector and indicator module (variant) can be used for emergency driving. Refer to the section entitled "Emergency driving via the drive direction switch/drive direction selection lever" in the chapter entitled "Procedure in emergencies".

Actuating the drive direction switch with the Fingertip version

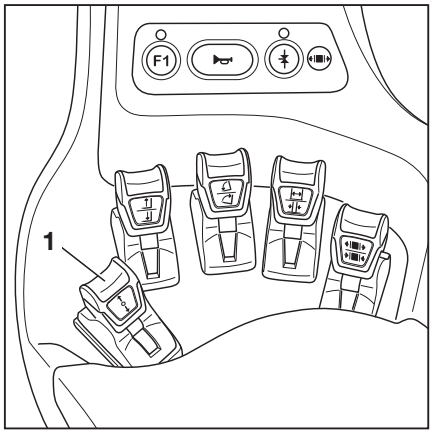

- For the "forwards" drive direction, push the drive direction switch (1) forwards.
- For the "backwards" drive direction, pull the drive direction switch (1) backwards.

NOTE

If the drive direction switch (1) is defective and the truck stops in a danger area, the drive direction selection lever on the travel direction selector and indicator module (variant) can be used for emergency driving. Refer to the section entitled "Emergency driving via the drive direction switch/drive direction selection lever" in the chapter entitled "Procedure in emergencies".

Actuating the drive direction selection lever with the travel direction selector and indicator module version

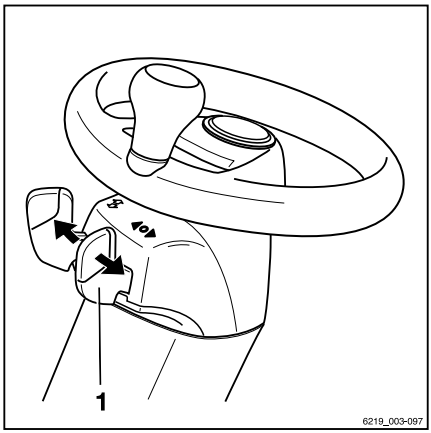

- For the "forwards" drive direction, push the drive direction selection lever (1) forwards.
- For the "backwards" drive direction, push the drive direction selection lever (1) backwards.

Alternatively, the drive direction can also be selected using the drive direction switches on the operating devices for the hydraulic functions.

NOTE

If the drive direction selection lever (1) is defective and the truck stops in a danger area, the drive direction switch on the operating device for the hydraulic functions can be used for emergency driving. Refer to the section entitled "Emergency driving via the drive direction switch/drive direction selection lever" in the chapter entitled "Procedure in emergencies".

Starting to drive

DANGER

Risk to life if the truck rolls away or tips over!

- Sit on the driver's seat.
- Fasten the seat belt.
- Activate the available restraint systems.

Observe the information in the chapter entitled Safety regulations when driving.

The driver's seat has a seat switch that checks whether the driver's seat is occupied. The truck cannot be moved if the driver's seat is not occupied or if the seat switch malfunctions. All lifting functions are disabled. The `SEAT SWITCH` message appears on the display-operating unit.

- Lift the fork carriage until the necessary ground clearance is achieved.
- Tilt the lift mast backwards.

– Release the parking brake.

– Select the desired drive direction.

The indicator for the selected drive direction ("forwards" (1) or "backwards" (2)) lights up on the display and operating unit.

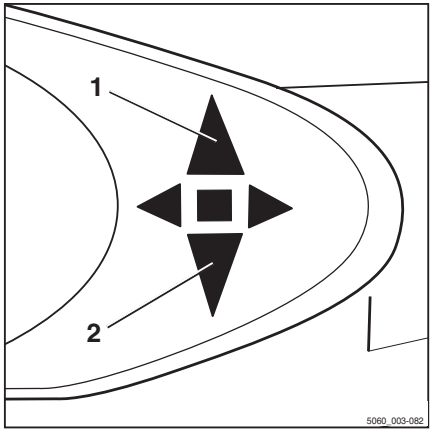

NOTE

Depending on the equipment, an acoustic signal (variant) may sound a warning during reverse travel, the warning light (variant) may light up or the hazard warning system (variant) may flash.

– Press the accelerator pedal (3).

The truck will travel in the selected drive direction. The accelerator pedal position controls the speed. When the accelerator pedal is released, the truck brakes automatically via the regenerative brake.

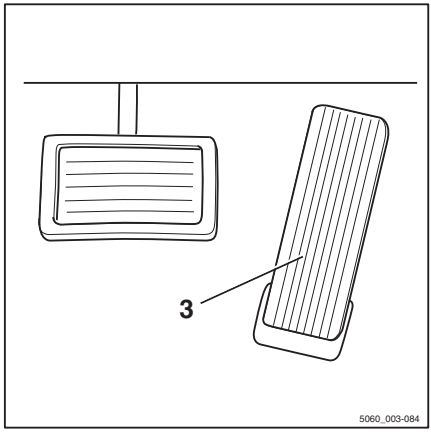

NOTE

The regenerative brake holds the truck briefly, even on ascending or descending gradients, without the parking brake being actuated. The truck will then begin to creep downhill slowly.

DANGER

Risk of accident due to brake failure!

The electric brake only functions while the key switch is switched on, the emergency off switch (variant) has not been actuated and the parking brake is released.

– Use the brake pedal if the electrical brake malfunctions

– Only leave the truck when the parking brake is applied.

Changing the drive direction

– Remove foot from accelerator pedal.

– Select the desired drive direction.

– Press the accelerator pedal.

The truck will travel in the selected drive direction.

NOTE

You can also change the drive direction while the truck is in motion. Your foot can remain on the accelerator pedal while you do so. The truck will brake and then accelerate in the opposite direction (reversing).

NOTE

If an electrical fault occurs in the accelerator, the drive unit switches off. The truck is braked by the regenerative brake. Once the electrical fault has been corrected, it will be possible to drive the truck again by releasing the accelerator pedal and then actuating the accelerator pedal again. If the truck still cannot be operated, park the truck securely and contact your authorised service centre.

Starting drive mode, dual pedal version (variant)

DANGER

Risk to life if the truck rolls away or tips over!

– Sit on the driver's seat.
– Fasten the seat belt.
– Activate the available restraint systems.

Observe the information in the chapter entitled Safety regulations when driving.

The driver's seat has a seat switch that checks whether the driver's seat is occupied. The truck cannot be moved if the driver's seat is not occupied or if the seat switch malfunctions. All lifting functions are disabled. The `SEAT SWITCH` message appears on the display-operating unit.

– Lift the fork carriage until the necessary ground clearance is achieved.
– Tilt the lift mast backwards.
– Release the parking brake.

– Actuate the right-hand accelerator pedal (1) to drive "forward" and actuate the left-hand accelerator pedal (2) to drive "backward".

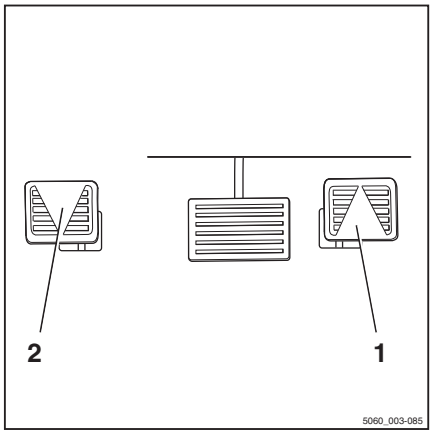

NOTE

In the dual pedal version, the drive direction switches on the operating devices do not function.

The indicator for the selected drive direction ("forwards" (3) or "backwards" (4)) lights up on the display and operating unit.

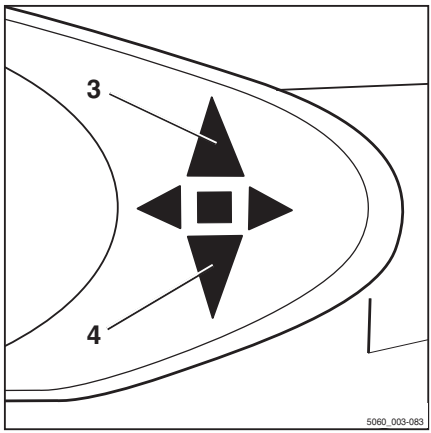

NOTE

Depending on the equipment, an acoustic signal (variant) may sound a warning during reverse travel, the warning light (variant) may light up or the hazard warning system (variant) may flash.

The truck will travel in the selected drive direction. The accelerator pedal position controls the speed. When the accelerator pedal is released, the truck brakes automatically via the regenerative brake.

NOTE

The regenerative brake holds the truck briefly, even on ascending or descending gradients, without the parking brake being actuated. The truck will then begin to creep downhill slowly.

⚠ DANGER

Risk of accident due to brake failure!

The electric brake only functions while the key switch is switched on, the emergency off switch (variant) has not been actuated and the parking brake is released.

– Use the brake pedal if the electric brake malfunctions.
– Only leave the truck when the parking brake is applied.

Changing the drive direction

– Remove your foot from the accelerator pedal.
– Actuate the accelerator pedal for the other direction.

The truck will travel in the selected drive direction.

NOTE

If an electrical fault occurs in the accelerator, the drive unit switches off. The truck is braked by the regenerative brake. Once the electrical fault has been corrected, it will be possible to drive the truck again by releasing the accelerator pedal and then actuating the accelerator pedal again. If the truck still cannot be operated, park the truck securely and contact your authorised service centre.

Operating the service brake

▷

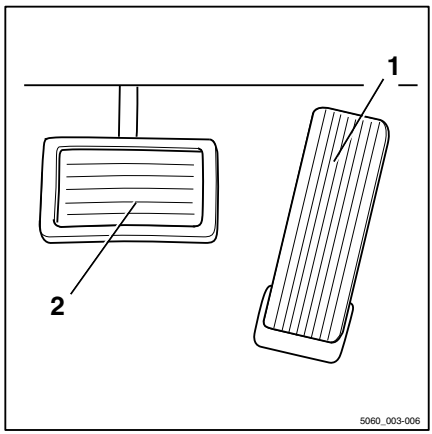

The electric brake converts the acceleration energy of the truck into electrical energy. This causes the truck to decelerate.

In addition, the truck can be braked using the service brake:

– Press the brake pedal (2).

In the first section of the brake pedal's travel, only the regenerative braking takes effect. As the pedal is depressed further, the service brake is also activated and acts on the drive wheels.

⚠ DANGER

Risk of accident!

If the service brake fails, the truck cannot brake sufficiently.

- Bring the truck to a standstill by applying the parking brake.
- Do not operate the truck again until the service brake has been repaired.

⚠ DANGER

Risk of tipping and risk of slipping!

The braking distance of the truck depends on the weather conditions and the level of contamination on the roadway. The braking distance increases with the square of the speed. There is a danger that the truck could slip or overturn.

- Adapt your driving and braking style to suit the weather conditions and the level of contamination on the roadway.
- Always choose a driving speed that will provide a sufficient stopping distance.

- Brake the truck by releasing the accelerator pedal (1).
- If the braking effect is inadequate, brake using the service brake (2) as well.

Zero braking (variant)

⚠ DANGER

Risk of accident!

Trucks with zero braking (variant) are not braked when the accelerator pedal is released.

- Bring the truck to a standstill by actuating the brake pedal.

If your truck features the zero braking equipment variant, the electric brake function is disabled. Taking your foot off the accelerator pedal does not brake the truck.

In this case, the truck can only be slowed by applying the service brake via the brake pedal.

Actuating the mechanical parking brake

DANGER

There is a risk of being run over if the truck rolls away, and therefore a danger to life.

- The truck must not be parked on a slope.
- In emergencies, secure with wedges on the side facing downhill.
- Only leave the truck when the parking brake is applied.

NOTE

Once the parking brake is released, the previously selected drive direction is retained and is shown on the drive direction indicator.

NOTE

If you operate the accelerator pedal while the parking brake is applied and a drive direction is selected, the message `PARKING BRAKE` *appears in the display.*

Apply the parking brake

▷

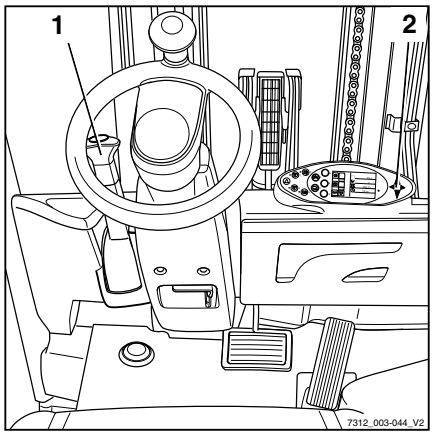

- Pull the parking brake lever (1) down fully and release.

The parking brake lever swivels back half the distance into the middle position automatically.

The parking brake is engaged and the wheels are blocked. Driving is no longer possible. The drive direction indicator (2) on the display and operating unit goes out.

Releasing the parking brake

▷

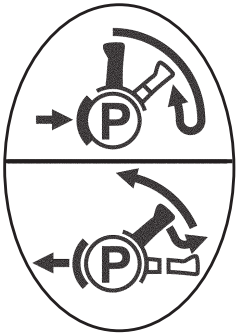

6210_494-002

– Pull the parking brake lever (1) down fully out of the middle position.
– In the lower lever position, pull out the lever knob and then guide the parking brake lever up fully.

NOTE

The parking brake lever swivels to the upper position automatically by means of spring force and should be guided only lightly by hand. If the adjustment is stiff, notify the authorised service centre.

Steering

⚠ DANGER

If the hydraulics fail, there is a risk of accident as the steering characteristics have changed.

– Do not operate the truck if it has a defective steering system.

– Steer the truck by turning the steering wheel (1) accordingly.

Turning the steering wheel in the direction of arrow (A) steers the truck in drive direction (A).

Turning the steering wheel in the direction of arrow (B) steers the truck in drive direction (B).

For turning radius information, see ⇒Chapter "Technical data", Page 355 .

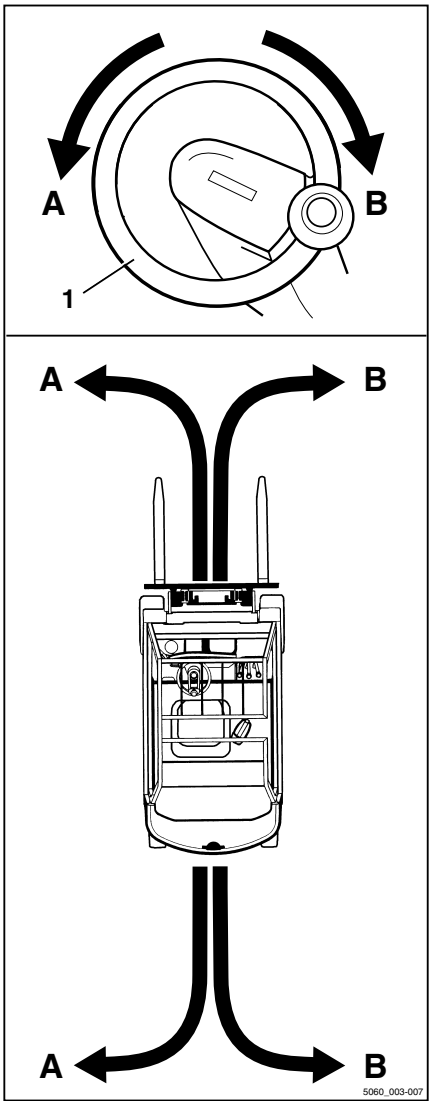

Driving on ascending and descending gradients

DANGER

Danger to life!

Driving on ascending and descending gradients carries special dangers!

– Always follow the instructions below.

– On ascending and descending gradients, the load must be carried facing uphill.

– It is only permitted to drive on ascending and descending gradients that are marked as traffic routes and that can be used safely.

– Ensure that the ground to be traversed is clean and provides a good grip.

– Do not turn on ascending and descending gradients.

– Do not drive onto or along ascending and descending gradients at an angle.

– Do not park the truck on ascending or descending gradients.

– In case of emergency, secure the truck with wedges so that the truck does not roll away.

– Reduce the driving speed on descending gradients.

It is not permitted to drive on long ascending and descending gradients greater than 15% due to the specified minimum braking and stability values.

– Before driving on ascending and descending gradients greater than 15%, consult the authorised service centre.

The process of placing loads into stock and removing loads from stock while on an ascending or descending gradient is not permitted!

– Always place loads into stock and remove loads from stock on a horizontal plane.

Reducing speed with a raised load (variant) ▷

This function (variant) reduces the speed of the truck with a raised load.

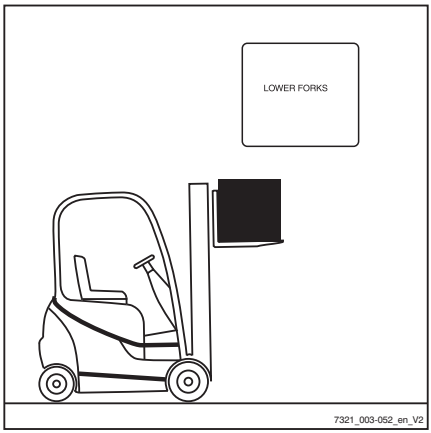

Automatic shut-off of the internal combustion engine (variant) ▷

The truck is equipped with an automatic shut-off function that shuts off the internal combustion engine when certain conditions apply simultaneously after a preset waiting time has elapsed.

The message `CUTOUT MODE` appears in the display.

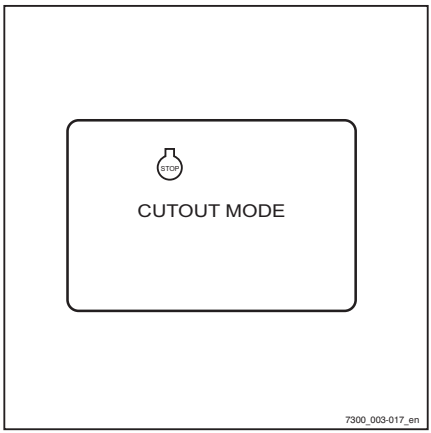

Conditions that apply simultaneously:

- The truck is stationary.
- The parking brake is applied.
- The driver's seat is not occupied.
- Particle filter regeneration is not in progress.
- There are no consumers switched on that require a significant amount of energy, such as the air conditioning.

The waiting time only starts when all conditions apply simultaneously. If one of the conditions is no longer fulfilled, the waiting time stops and is restored to the preset value.

NOTE

The waiting time is set to 120 seconds at the factory, but can be changed at a later date.

- *Contact the authorised service centre.*

Parking

Parking the truck securely and switching it off ▷

⚠ DANGER

Risk of fatal injury from being run over if the truck rolls away!

- The truck must not be parked on a slope.
- In emergencies, secure the truck using wedges on the side facing downhill.
- Only leave the truck when the parking brake has been applied.

⚠ DANGER

There is a risk of fatal injury from a falling load or parts of the truck being lowered!

- Lower the load fully before leaving the truck.

- Apply the parking brake.
- Lower the fork carriage to the ground.
- Tilt the lift mast forwards until the tips of the fork arms rest on the ground.
- If attachments (variant) are fitted, retract the working cylinders; see the chapter entitled "General instructions for controlling attachments".
- Take your foot off the accelerator pedal and allow the engine to continue idling for a short while.
- Turn the switch key to the left and remove it.

NOTE

Switch keys, FleetManager cards (variant), FleetManager transponder chips (variant) and the PIN code for access authorisation (variant) must not be handed over to other persons unless explicit instructions to this effect have been given.

Wheel chock (variant)

The wheel chock (variant) is used to prevent the truck from rolling away on a slope.

– Lift handle (2) on the support mounting.

– Remove wheel chock (1) from the support mounting.

– Push the wheel chock under a front axle wheel on the side facing the downhill slope.

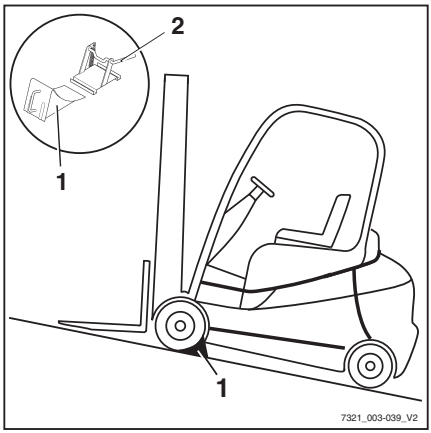

NOTE

After use, return the wheel chock to the support mounting and press the handle (2) down again.

Lifting

Lifting system variants

The movement of the fork carriage and the lift mast heavily depends on the following equipment:

- The lift mast with which the truck is equipped, see ⇒Chapter "Types of lift mast", Page 152
- The operating device with which the hydraulic functions are controlled, see ⇒Chapter "Lifting system operating devices", Page 155

Regardless of the equipment variants of the truck, the basic specifications and procedures must be complied with, see ⇒Chapter "Safety regulations when handing loads", Page 172 .

Automatic lift cut out (variant)

Description:

The automatic lift cut out (variant) means that the load cannot be lifted above a preset height. This function uses a sensor that is welded on at the factory at the required lift mast limit height. Once attached, the height cannot be easily changed.

Application:

- If the ceiling of the building is lower than the maximum lift height of the truck, this variant can prevent the lift mast from accidentally hitting the ceiling, which can result in damage.
- If the truck is frequently used at a particular height, the work is simplified by the automatic lift cut out at this height.

NOTE

If a load is lifted very quickly, the fork carriage and load are moved approximately 15 cm above the position of the sensor due to inertia. This deviation is already taken into consideration at the factory when determining the position of the sensor.

Overriding and reactivating the automatic lift cut out

If a load needs to be lifted to the truck's maximum lift height and the automatic lift cut out function is not required, it is possible to override the lift cut out. It is automatically reactivated when the truck is switched off and back on again.

To override the automatic lift cut out:

– Press Softkey F1 (1). ▷

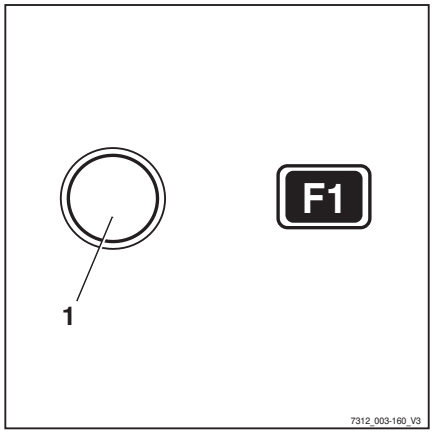

Automatic lift cut out is switched off.
The F1 symbol is displayed. Loads can be lifted to the maximum lift height for the truck.

To switch the automatic lift cut out back on:

– Press Softkey F1 (1).

Automatic lift cut out is switched on.
The F1 symbol is displayed. Loads can be lifted only to the set lift height for the truck.

Automatic mast vertical positioning (variant)

Description

If the truck is equipped with the "automatic mast vertical positioning" comfort feature (variant), the driver can lower goods, such as paper rolls, vertically with precision and therefore avoid damage when unloading. The tilt cylinders run into the end stops gently to prevent hard vibrations and impacts. Oscillating motions of the truck are minimised, thus increasing work safety. The automatic mast vertical positioning reduces wear on various components and therefore reduces repair costs.

⚠ CAUTION

Risk of damage to property due to the lift mast colliding with racks or other objects!

– Before using the "automatic mast vertical positioning" comfort feature, position the truck at a sufficient distance from racks and other objects.

The "automatic mast vertical positioning" comfort feature consists of the following individual functions:

- Display of the "automatic mast vertical positioning"
- Automatic movement into the "automatic mast vertical position"
- End stops are approached gently

The "automatic mast vertical positioning" comfort feature is only available as a variant if the truck is equipped with one of the following operating devices:

- Double mini-lever
- Triple mini-lever
- Quadruple mini-lever
- Fingertip
- Joystick 4Plus

Display of the "automatic mast vertical positioning"

The driver can see the mast tilt on the display-operating unit screen. The bar in the display shows the current mast tilt relative to the "automatic mast vertical position". The arrow above the bar marks the vertical position of the lift mast.

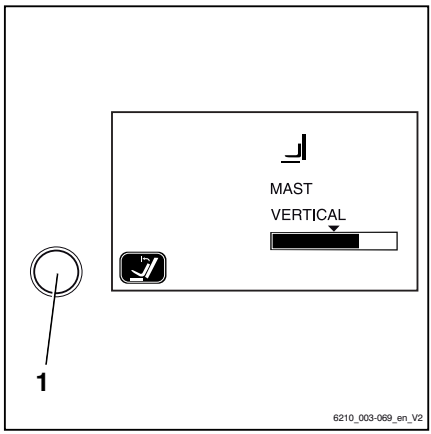

Automatic movement into the "automatic mast vertical position"

– Press the Softkey (1). ▷

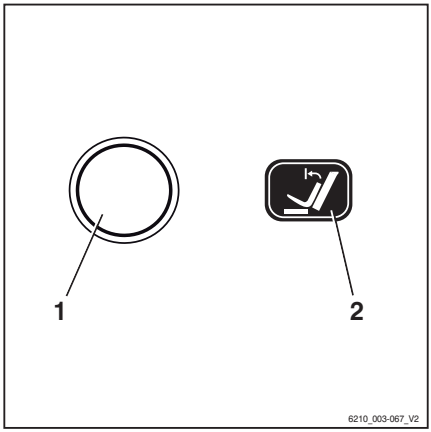

The "automatic mast vertical positioning" comfort feature is switched on. The (2) symbol is displayed.

– Tilt the lift mast forwards.

The lift mast stops automatically as soon as the preselected setting for "automatic mast vertical positioning" is reached.

If the comfort feature is switched off, the lift mast tilts forwards past the "automatic mast vertical positioning" without stopping.

If the lift mast is tilted backwards, it moves past the "automatic mast vertical position" without stopping, regardless of whether the comfort feature is switched on or not.

Gentle approach to the end stops

The lift mast is braked gently at the end of the tilt range. This prevents the lift mast from stopping harshly in the end position and reduces severe oscillating motions of the truck.

Tilting the lift mast forwards with "automatic mast vertical positioning"

– Press the Softkey (1). ▷

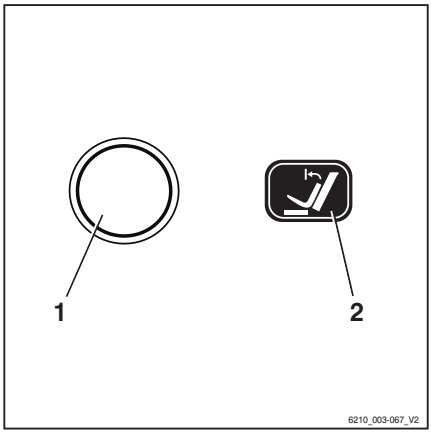

The "automatic mast vertical positioning" comfort feature is switched on. The (2) symbol is displayed.

– Tilt the lift mast forwards.

NOTE

The way in which the lifting system is operated depends on the operating devices included in the truck's equipment; see the chapter entitled "Lifting system operating devices".

The lift mast is tilted forwards and stops as soon as the vertical position is reached. The arrow above the bar shown on the screen of the display and operating unit represents the "automatic mast vertical position".

To tilt the lift mast forwards beyond the vertical position:

– Release the operating device that is used for tilting then actuate the operating device again.

The lift mast is tilted beyond the vertical position up to the end stop. The current lift mast tilt is shown in the display and operating unit.

– To switch off "automatic mast vertical positioning", press the Softkey (1).

The "automatic mast vertical positioning" comfort feature is switched off. The symbol is displayed.

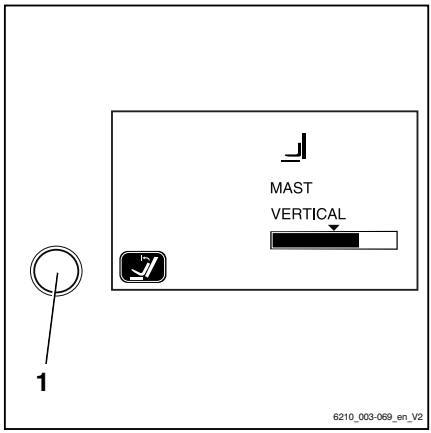

Tilting the lift mast backwards with "automatic mast vertical positioning"

– Tilt the lift mast backwards.

The lift mast is tilted backwards without stopping in the vertical position.

Possible restrictions to the "automatic mast vertical positioning"

In some circumstances, the lift mast cannot move exactly into the preset vertical position. Possible causes include:

- Uneven ground
- Bent fork
- Bent attachment
- Worn tyres
- Severely deformed lift mast

The vertical position can be corrected by tilting the lift mast using the relevant operating device. If the vertical position has to be corrected frequently, the "automatic mast vertical position" should be calibrated.

Calibrating the "automatic mast vertical position"

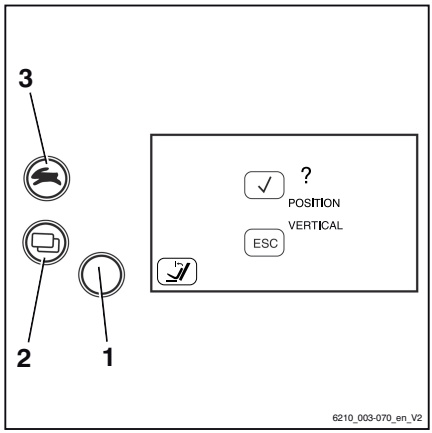

– Set the lift mast to the required position.

– Press and hold down the Softkey (1) for at least five seconds.

The message `? VERTICAL POSITION` appears in the display.

Storing the mast position:

– Press the drive programme selection button (3) to confirm ✓.

The current mast position is stored.

Cancelling calibration:

– Press the menu change button (2) to cancel the input ESC.

The calibration is aborted.

Types of lift mast

One of the following lift masts may be installed in the truck:

Telescopic mast

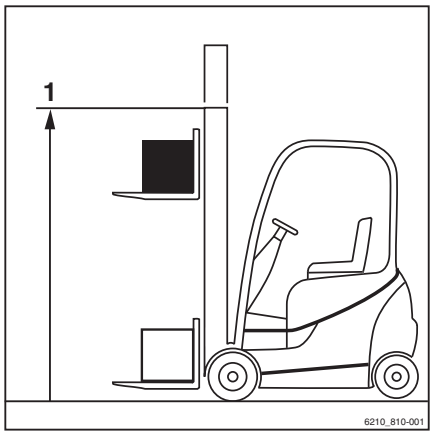

During lifting, the lift mast rises over the outer lift cylinders, bringing the fork carriage with it via the chains (fork carriage rises twice as fast as the inner lift mast). The top edge (1) of the inner lift mast can therefore be higher than the fork carriage.

⚠ DANGER

Risk of accident due to collision of the lift mast or load with low ceilings or entrances.

– Note that the inner lift mast or load may be higher than the fork carriage.

– Note the heights of ceilings and entrances.

Triplex lift mast (variant)

During lifting, the inner lift cylinder moves up to free lift (3), and then the outer lift cylinders raise the inner lift mast up to the max. height (2).

⚠ DANGER

Risk of accident due to collision of the lift mast or load with low ceilings or entrances.

– Note that the inner lift mast or load may be higher than the fork carriage.

– Note the heights of ceilings and entrances.

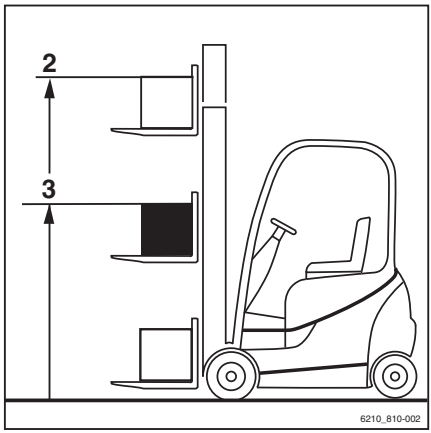

Malfunctions during lifting mode

Incorrect extension sequence

⚠ DANGER

Risk of accidents!

With triple masts (variant), an incorrect extension sequence may occur, i.e. the inner lift mast may extend before the free lift has finished. As a result, the overall height is exceeded and damage may occur in passageways or from low ceilings.

An incorrect extension sequence may, for instance, result from:

- The hydraulic oil temperature being too low.
- The fork carriage becoming blocked in the inner lift mast.
- Blocking of the free lift cylinder.
- The chain roller becoming blocked at the free lift cylinder.

– If the hydraulic oil temperature is too low, slowly actuate the lift mast functions several times in order to raise the oil temperature.

In the event that the fork carriage is blocked in the inner lift mast, or the free lift cylinder or chain roller are blocked, the cause of the blockage must be eliminated before resuming work.

– Notify your service centre

Load chains not under tension

⚠ DANGER

Danger caused by a falling load!

– Make sure that the chain(s) does (do) not become slack when lowering the load.

Slack chains can, for instance, result from:

- Resting the fork carriage or the load on the racking.
- Fork carriage rollers becoming blocked in the lift mast due to contamination.

– If the fork carriage or the load comes to an unexpected stop, lift the fork carriage until the chains are under tension again and lower the load at another suitable location.

– If the fork carriage rollers in the lift mast become blocked due to contamination, lift the fork carriage until the chains are under tension again. Remove the contamination before resuming work.

⚠ WARNING

Risk of injury!

– Observe the safety regulations for working on lift masts; see ⇒Chapter "Working at the front of the truck", Page 310 .

Hydraulic blocking function

The hydraulic blocking function ensures that all hydraulic functions are disabled whenever the seat switch in the driver's seat is unloaded. This is when the driver stands up from the driver's seat or exits the truck. All hydraulic functions are disabled in this case:

- Lifting the load
- Lowering the load
- Tilting the lift mast
- Auxiliary hydraulic functions

As soon as the driver sits down again, all hydraulic functions are available again.

Emergency lowering of the load after the hydraulics blocking function has been triggered

If the truck's hydraulics are disabled by the exhaust valve of the hydraulic blocking function, either permanently or due to a technical fault, it is possible to lower a raised load with emergency lowering at the valve block, see ⇒Chapter "Emergency lowering", Page 288 .

Lifting system operating devices

The method of operating the lifting system depends on the operating devices included in the truck's equipment.

Possible equipment variants include:

- **Double mini-lever**
- **Triple mini-lever**
- **Quadruple mini-lever**
- **Joystick 4Plus**
- **Fingertip**

– The following information must be observed regardless of the equipment variant.

⚠ DANGER

Reaching into or climbing between moving parts of the truck (e.g. lift mast, sideshifts, working equipment, load carrying devices etc.) can lead to serious injury or death and is therefore prohibited.

– Observe the safety regulations for handling loads.

– Only operate the lifting system from the driver's seat.

⚠ WARNING

If several hydraulic functions are used at the same time, these functions can influence each other.

For example, if the fork carriage is raised and an attachment is operated at the same time, this may change the lifting speed or the operating speed of the attachment.

Controlling the lifting system using a double mini-lever ▷

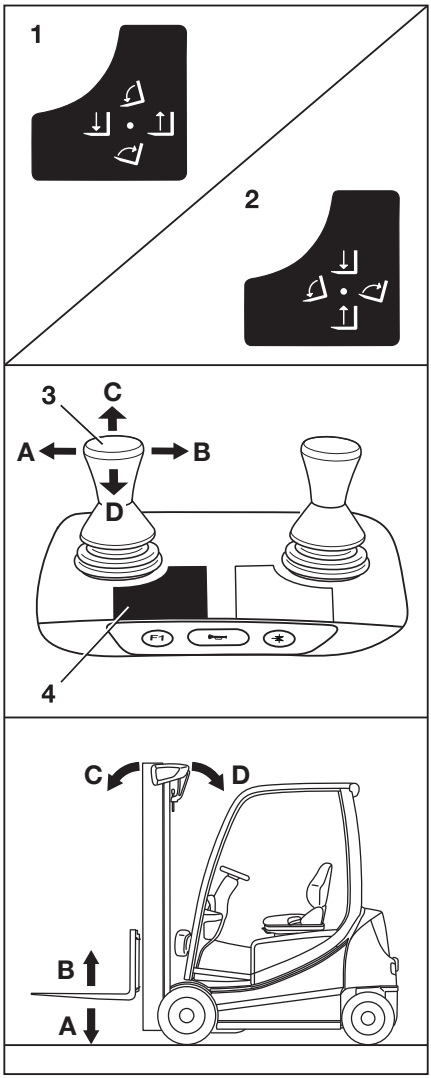

⚠ DANGER

Reaching into or climbing between moving parts of the truck (e.g. lift mast, sideshifts, working equipment, load carrying devices etc.) can lead to serious injury or death and is therefore prohibited.

– Observe the safety regulations for handling loads.
– Operate the lifting system from the driver's seat only.

⚠ WARNING

Risk of accident as a result of an operating error!

These operating instructions describe how to operate the lifting system in the factory configuration.

If the authorised service centre has configured a different configuration, the newly applied pictograms must be observed to ensure safe operation. The operating company must make all drivers aware of the fact that a different configuration has been configured.

– Observe the pictograms on the operating levers.
– Before use, check that the hydraulic functions are working correctly.

The lifting, lowering and tilting movements of the lift mast are controlled using the "lift mast" 360° lever (3). The adhesive label bearing the pictograms for the hydraulic functions (1) or (2) is affixed at the designated point (4).

The pictograms are arranged according to the direction of movement of the "lift mast" 360° lever (3).

NOTE

- *The truck is configured at the factory in accordance with the adhesive label (1). The following steps for moving the fork carriage and lift mast are based on this configuration.*
- *The configuration according to the adhesive label (2) with reversed functional axes can be ordered as a variant.*

Lifting/lowering the fork carriage

To lift the fork carriage:

– Move the "lift mast" 360° lever (3) in the direction of the arrow (B).

To lower the fork carriage:

– Move the "lift mast" 360° lever (3) in the direction of the arrow (A).

Tilting the lift mast

To tilt the lift mast forwards:

– Move the "lift mast" 360° lever (4) in the direction of the arrow (C).

To tilt the lift mast backwards:

– Move the "lift mast" 360° lever (4) in the direction of the arrow (D).

Movements of the lifting system and meanings of the pictograms

A Lowering
B Lifting
C Tilting forwards
D Tilting backwards

Controlling the lifting system using a triple mini-lever ▷

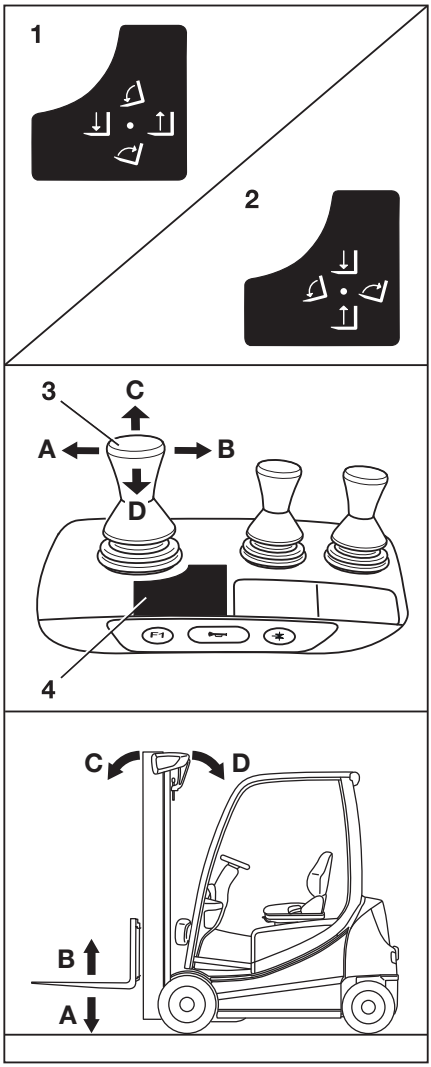

⚠ DANGER

Reaching into or climbing between moving parts of the truck (e.g. lift mast, sideshifts, working equipment, load carrying devices etc.) can lead to serious injury or death and is therefore prohibited.

– Observe the safety regulations for handling loads.
– Operate the lifting system from the driver's seat only.

⚠ WARNING

Risk of accident as a result of an operating error!

These operating instructions describe how to operate the lifting system in the factory configuration.

If the authorised service centre has configured a different configuration, the newly applied pictograms must be observed to ensure safe operation. The operating company must make all drivers aware of the fact that a different configuration has been configured.

– Observe the pictograms on the operating levers.
– Before use, check that the hydraulic functions are working correctly.

The lifting, lowering and tilting movements of the lift mast are controlled using the "lift mast" 360° lever (3). The adhesive label bearing the pictograms for the hydraulic functions (1) or (2) is affixed at the designated point (4).

The pictograms are arranged according to the direction of movement of the "lift mast" 360° lever (3).

NOTE

The truck is configured at the factory in accordance with the adhesive label (1). The following steps for moving the fork carriage and lift mast are based on this configuration.

Lifting/lowering the fork carriage

To lift the fork carriage:

– Move the "lift mast" 360° lever (3) in the direction of the arrow (B).

To lower the fork carriage:

– Move the "lift mast" 360° lever (3) in the direction of the arrow (A).

Tilting the lift mast

To tilt the lift mast forwards:

– Move the "lift mast" 360° lever (4) in the direction of the arrow (C).

To tilt the lift mast backwards:

– Move the "lift mast" 360° lever (4) in the direction of the arrow (D).

Movements of the lifting system and meanings of the pictograms

A Lowering
B Lifting
C Tilting forwards
D Tilting backwards

Controlling the lifting system using a quadruple mini-lever ▷

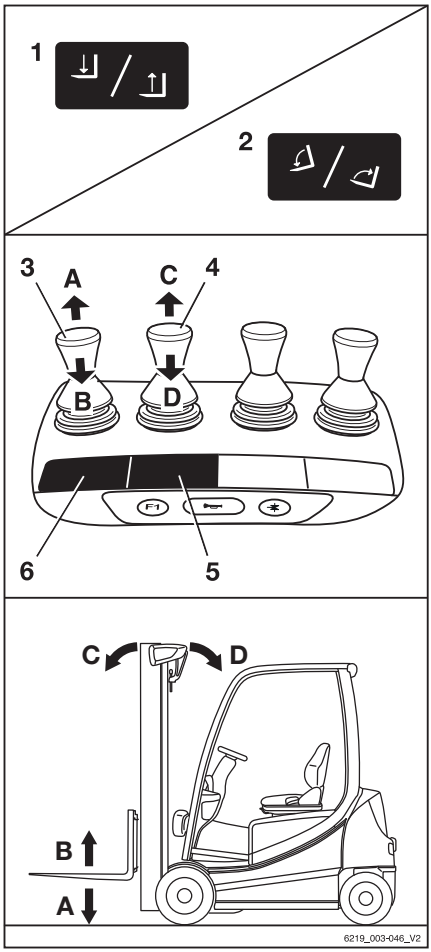

⚠ DANGER

Reaching into or climbing between moving parts of the truck (e.g. lift mast, sideshifts, working equipment, load carrying devices etc.) can lead to serious injury or death and is therefore prohibited.

– Observe the safety regulations for handling loads.
– Operate the lifting system from the driver's seat only.

⚠ WARNING

Risk of accident as a result of an operating error!

These operating instructions describe how to operate the lifting system in the factory configuration.

If the authorised service centre has configured a different configuration, the newly applied pictograms must be observed to ensure safe operation. The operating company must make all drivers aware of the fact that a different configuration has been configured.

– Observe the pictograms on the operating levers.
– Before use, check that the hydraulic functions are working correctly.

The lifting and lowering movements of the lift mast are controlled using the "lift-lower" operating lever (3). The adhesive label bearing the corresponding pictograms (1) is affixed at the designated point (6).

The tilting movement of the lift mast is controlled using the "tilting" operating lever (4). The adhesive label bearing the corresponding pictograms (2) is affixed at the designated point (5).

The pictograms are arranged according to the directions of movement of the operating lever (3) or (4).

Lifting/lowering the fork carriage

To lift the fork carriage:

– Move the "lifting/lowering" operating lever (3) in the direction of the arrow (B).

To lower the fork carriage:

– Move the "lifting/lowering" operating lever (3) in the direction of the arrow (A).

Tilting the lift mast

To tilt the lift mast forwards:

– Move the "lift mast" operating lever (4) in the direction of the arrow (C).

To tilt the lift mast backwards:

– Move the "lift mast" operating lever (4) in the direction of the arrow (D).

Movements of the lifting system and meanings of the pictograms

A Lowering
B Lifting
C Tilting forwards
D Tilting backwards

Controlling the lifting system using the Joystick 4Plus

⚠ DANGER

Reaching into or climbing between moving parts of the truck (e.g. lift mast, sideshifts, working equipment, load carrying devices etc.) can lead to serious injury or death and is therefore prohibited.

– Observe the safety regulations for handling loads.

– Only operate the lifting system from the driver's seat.

Lifting/lowering the fork carriage

To lift the fork carriage:

– Pull the Joystick 4Plus (1) backwards (B).

To lower the fork carriage:

– Push the Joystick 4Plus (1) forwards (A).

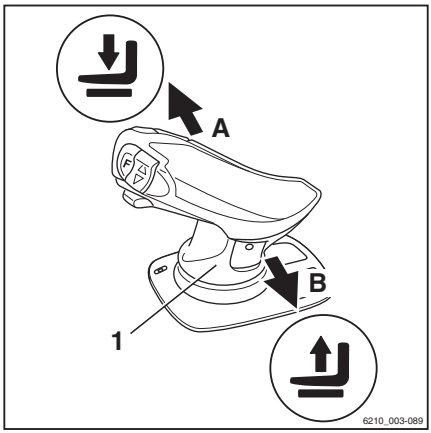

Tilting the lift mast

To tilt the lift mast forwards:

– Tilt the horizontal rocker button (2) to the left (C).

To tilt the lift mast backwards:

– Tilt the horizontal rocker button (2) to the right (D).

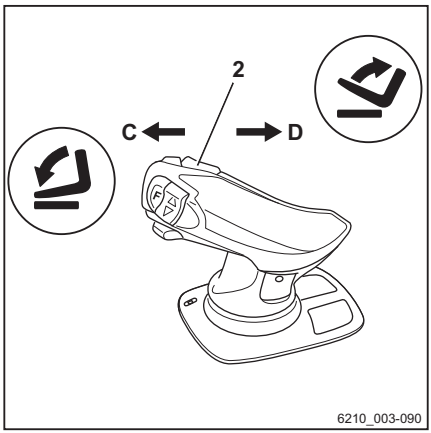

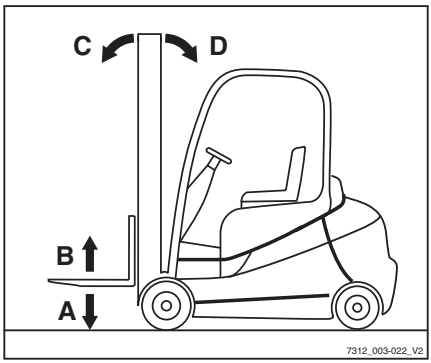

Fork carriage sideshift

To move the fork carriage to the left:

– Push the Joystick 4Plus (1) to the left (E).

To move the fork carriage to the right:

– Push the Joystick 4Plus (1) to the right (F).

NOTE

The symbols on the Joystick 4Plus indicate the direction of movement of the lift mast or fork carriage.

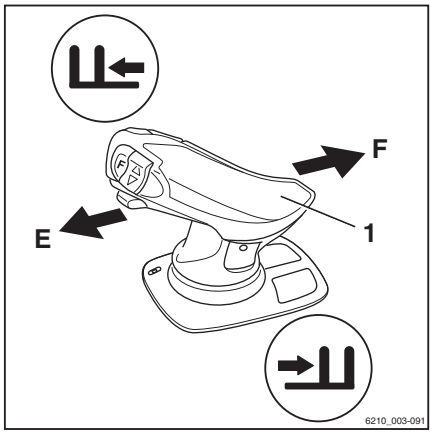

Controlling the lifting system using the Fingertip

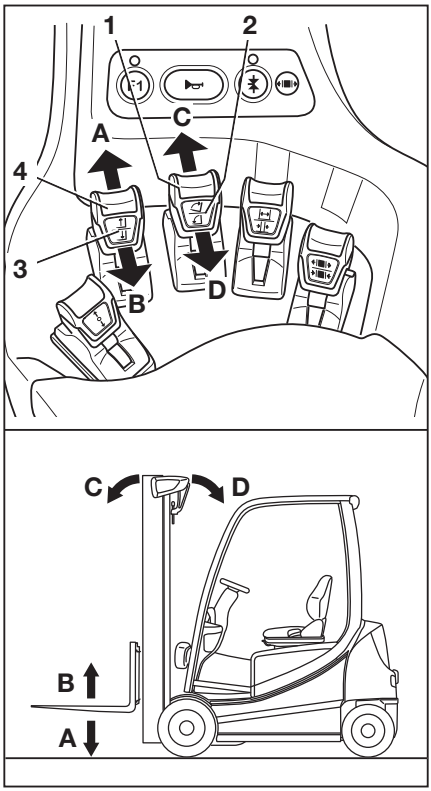

DANGER

Reaching into or climbing between moving parts of the truck (e.g. lift mast, sideshifts, working equipment, load carrying devices etc.) can lead to serious injury or death and is therefore prohibited.

– Observe the safety regulations for handling loads.
– Operate the lifting system from the driver's seat only.

WARNING

Risk of accident as a result of an operating error!

These operating instructions describe how to operate the lifting system in the factory configuration.

If the authorised service centre has configured a different configuration, the newly applied pictograms must be observed to ensure safe operation. The operating company must make all drivers aware of the fact that a different configuration has been configured.

– Observe the pictograms on the operating levers.
– Before use, check that the hydraulic functions are working correctly.

The lifting and lowering movements of the lift mast are controlled using the "lift-lower" operating lever (4). The adhesive label with the corresponding pictogram (3) is located on the operating lever.

The tilting movement of the lift mast is controlled using the "tilting" operating lever (1). The adhesive label with the corresponding pictogram (2) is located on the operating lever.

The pictograms are arranged according to the directions of movement of the operating lever (4) or (1).

Lifting/lowering the fork carriage

To lift the fork carriage:

– Move the "lifting/lowering" operating lever (4) in the direction of the arrow (B).

To lower the fork carriage:

– Move the "lifting/lowering" operating lever (4) in the direction of the arrow (A).

Tilting the lift mast

To tilt the lift mast forwards:

– Move the "tilting" operating lever (1) in the direction of the arrow (C).

To tilt the lift mast backwards:

– Move the "tilting" operating lever (1) in the direction of the arrow (D).

Movements of the lifting system and meanings of the pictograms

A Lowering
B Lifting
C Tilting forwards
D Tilting backwards

Fork wear protection (variant)

The "fork wear protection" variant ensures that the fork arms do not touch the ground. The fork arms are protected against wear and the building floor is protected against damage.

There are two types of fork wear protection:

- Fork wear protection (mechanical)
  This variant is described here.
- Electrical fork wear protection
  The fleet manager can configure this variant. See the section "Electrical fork wear protection (variant)" in the chapter entitled "Lift height-dependent assistance systems".

The lift cylinders have in-built fixed stops to prevent the fork arms from hitting the ground. The lower stop makes inserting the forks into a pallet more comfortable.

The driver cannot adjust the fork wear protection manually. However, the fork wear protection must be continually adjusted as the wear on the front tyres increases.

– Contact the authorised service centre on this matter.

Changing the fork arms

⚠ DANGER

Risk of fatal injury from being run over if the truck rolls away!

– Do not park the truck on a gradient.
– Apply the parking brake.
– Change the fork arms in a separate, safe location on a level surface.

⚠ WARNING

There is a risk of injury when changing the fork arms; the weight of the fork arms could cause them to fall on your legs, feet or knees. The space to the left and right of the fork is a danger area.

– Always wear protective gloves and safety footwear when changing the fork arms.
– Ensure that no one stands in the danger area!
– Do not pull on the fork arms.
– The fork arms must always be carried by two people; if necessary, use a hoist.

NOTE

- *For installation and removal, a transport pallet is recommended for supporting the fork arms. The pallet size depends on the fork arm size used and should be dimensioned such that the fork arms do not protrude after being placed on the pallet. This means the fork arms can be safely placed down and transported.*
- *Both fork arms can be pushed over to the same side. It is possible to choose the side via which the forks are removed*

Removal

- Select a pallet corresponding to the fork arm size.
- Set down the pallet next to the fork carriage on the side chosen for removal.
- Lift the fork carriage until the fork arms are approx. 3 cm above the pallet.
- Apply the parking brake.
- Remove the switch key.
- Unscrew the locking screw (2) on the side chosen for removal.
- Pull up the locking lever (1) and push the fork arms onto the pallet one after the other.

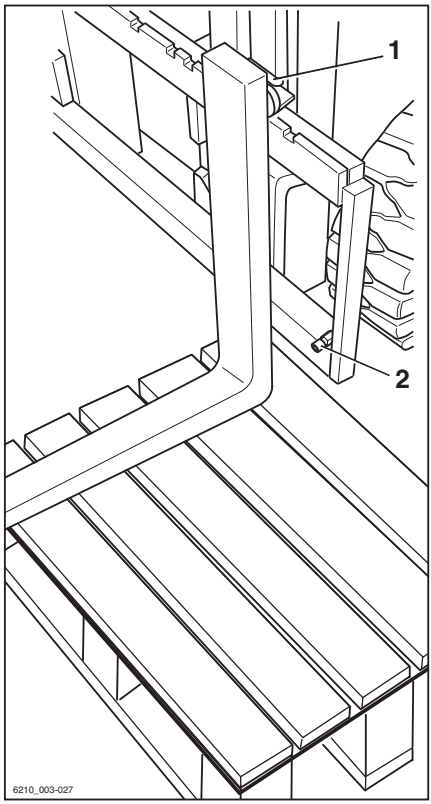

Installation

- Make sure that the locking screw is unscrewed on the side chosen for installation.
- Place the fork arms on a pallet next to the fork carriage on the side chosen for installation.
- Pull up the locking lever (1) and push the fork arms onto the fork carriage one after the other.
- Place the fork arms in the required position and push down the locking lever. Ensure that the locking lever snaps into place.
- Screw in and tighten the locking screw (2).

⚠ DANGER

There is a risk of fatal injury from a falling load or fork!

- Tighten the locking screw each time a fork is changed.
- Driving and moving loads without the locking screw is prohibited.

NOTE

If the truck is equipped with the "load measurement" comfort feature, a "zero adjustment of the load measurement" must always be performed after the fork arms have been changed. Otherwise, correct load measurement cannot be guaranteed.

Fork extension (variant)

⚠ DANGER

There is a risk of fatal injury from being run over if the truck rolls away.

- Do not park the truck on a slope.
- Apply the parking brake.
- Change the fork extension in a cordoned-off, safe location on a level surface.

⚠ WARNING

There is a risk of crushing!

The weight of the fork extension can cause crushing and cuts can be caused by sharp edges or burrs.

- Always wear protective gloves and safety shoes.

⚠ WARNING

There is a risk of tipping!

The weight and dimensions of the fork extension affect the stability of the truck. The permissible weights stated on the capacity rating plate must be reduced in proportion to the actual load distance.

The truck is equipped with a fork extension ex works, the capacity rating plate is already adjusted accordingly.

- Observe the load capacity; see the section entitled "Capacity rating plate" in the chapter entitled "Handling loads".

NOTE

If the truck is equipped with the "load measurement" comfort feature, a "zero adjustment of the load measurement" must always be performed after the fork extensions have been changed. Otherwise, correct load measurement cannot be guaranteed.

Attaching

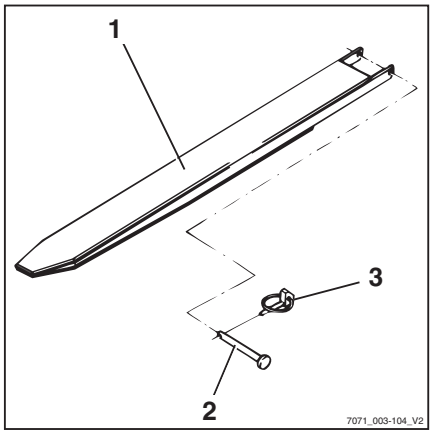

⚠ DANGER

Risk of fatal injury from falling load!

At least 60% of the length of the fork extension must lie on the fork arm. No more than 40% of the length of the fork extension may overhang the end of the fork arm. In addition, the fork extension must be secured against slipping from the fork arm.

If the fork extension (1) is not secured with a securing bolt (2) and linch pin (3), the load may fall along with the fork extension.

- Push the fork extension all the way to the back of the fork.
- Make sure that 60% of the length of the fork extension is on the fork arm.
- Always secure the fork extension with a securing bolt.
- Always secure the securing bolt with a linch pin.

- Remove the linch pin (3) from the securing bolt (2).
- Remove the securing bolt from the fork extension (1).
- Push the fork extension onto the fork arms until it is flush with the fork back.
- Insert the securing bolt located behind the fork back fully into the fork extension.
- Insert the linch pin into the securing bolt and secure.

Removing

- Remove the linch pin (3) from the securing bolt (2).
- Remove the securing bolt from the fork extension (1).
- Pull the fork extension from the fork arms.
- Insert the securing bolt fully into the fork extension.
- Insert the linch pin into the securing bolt and secure.

Operation with reversible fork arms (variant) ▷

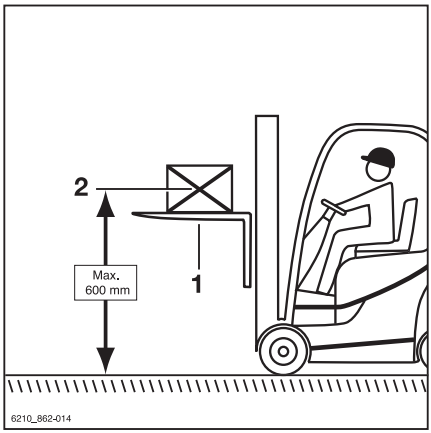

⚠ DANGER

Risk to life from falling load!

Standard fork arms are not structurally designed for reverse operation. If this instruction is not observed, it can lead to material failure and the load falling.

– Only work in reverse operation using reversible fork arms (1)

⚠ WARNING

Risk of accident from slipping load!

Loads may slip on the reversible fork arms if there is no load support. A fork extension (variant) cannot be secured against slipping.

– Do not use a fork extension (variant)

⚠ WARNING

Risk of accident from the truck tipping over.

When driving, the centre of gravity of the load (2) must not be higher than 600 mm above the ground. The truck may tip forwards when driving or braking.

– Only drive with a load centre of gravity up to a max. of 600 mm above the ground

NOTE

If the truck is equipped with the "load measurement" comfort feature, a "zero adjustment of the load measurement" must always be performed after the reversible fork arms have been changed. Otherwise, correct load measurement cannot be guaranteed.

Reversible fork arms (1) can be used to reach an additional lift height. The reversible fork arms are installed on the fork carriage in the same manner as standard fork arms. Loads may be lifted on and beneath the reversible fork arms. The mast is lifted and tilted in the same manner.

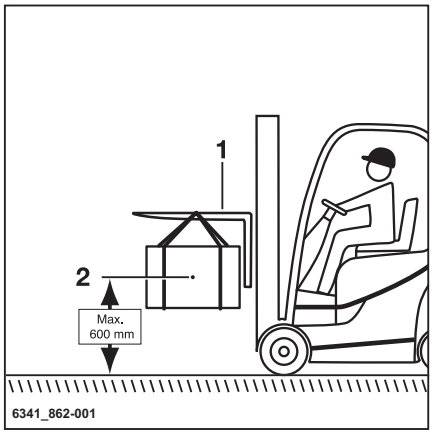

- Only work in reverse operation using reversible fork arms
- Do not use a fork extension (variant)
- If the "load measurement" comfort feature is available, perform a "zero adjustment of the load measurement"
- To drive, raise the load centre of gravity (2) to a max. of 600 mm above the ground
- Observe the information in the section entitled "Transporting suspended loads"

Handling loads

Safety regulations when handing loads ▷

The safety regulations for handling loads are shown in the following sections.

⚠ DANGER

There is a risk to life caused by falling loads or if parts of the truck are being lowered.

– Never walk or stand underneath suspended loads or raised fork arms.

– Never exceed the maximum load indicated on the capacity rating plate. Otherwise stability cannot be guaranteed!

⚠ DANGER

Risk of accident from falling or crushing!

– Do not step onto the forks.

– Do not lift people.

– Never grab or climb on moving parts of the truck.

⚠ DANGER

Risk of accident from a falling load!

– When transporting small items, attach a load safety guard (variant) to prevent the load from falling on the driver.

– Use a closed roof covering (variant) in addition.

Capacity rating plate

The load capacity indicated for the truck on the capacity rating plate must not be exceeded. The load capacity is influenced by the load centre of gravity, the lift height, the attachment or fork arms used and the tyres.

– The position of the capacity rating plate can be taken from the "labelling points".

⚠ DANGER

Risk of fatal injury from the truck losing stability!

Never exceed the load capacity indicated on the capacity rating plate. This applies to compact and homogeneous loads. If these values are exceeded, the stability and rigidity of the fork arms and lift mast cannot be guaranteed.

Improper or incorrect operation or the placement of persons to increase load capacity is prohibited.

The attachment of additional weights to increase the load capacity is prohibited.

⚠ DANGER

Risk of death due to misinterpretation of the capacity rating plate!

Only the capacity rating plates on the truck are valid.

The figures show examples.

– Only observe the capacity rating plate on the truck.

⚠ DANGER

Risk of fatal injury from the truck losing stability!

If the permissible loading of the attachments (variant) and the reduced load capacity of the truck and attachment combination is exceeded, there is a risk of loss of stability.

– The permissible loading of the attachments (variant) and the reduced load capacity of the combination of truck and attachment must not be exceeded.

– Observe the information given on the special capacity rating plates on the truck and attachment.

Basic capacity rating plate

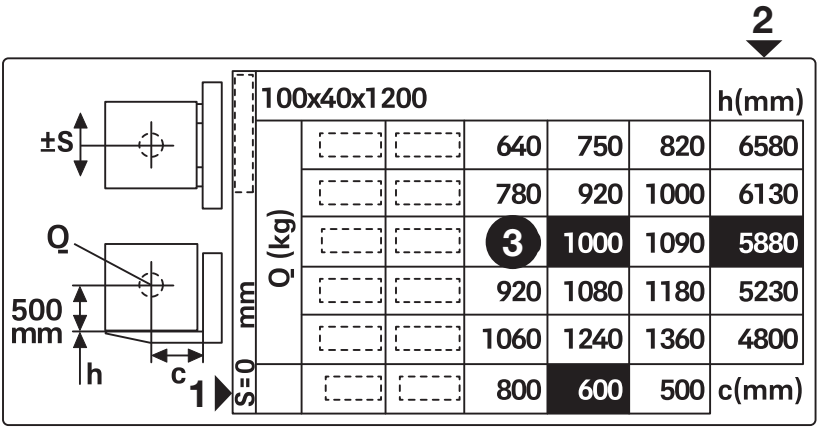

Basic capacity rating plate

1 Distance between the load centre of gravity and the fork back

2 Permissible lift height

3 Weight of load to be lifted

There is always at least one capacity rating plate on the truck: the basic capacity rating plate. It shows the load capacity only for fork arms without the attachment. If an attachment is attached, a second capacity rating plate is fitted: the residual load capacity rating plate. This plate shows the load capacity taking the attachment into account. In the case of integrated attachments, only a basic capacity rating plate is created as the integrated devices cannot be easily removed from the truck.

The **example values** used here are **marked in black**.

– To determine the actual load capacity, observe the basic capacity rating plate on the truck.

Example of reading the capacity rating plate: ▷

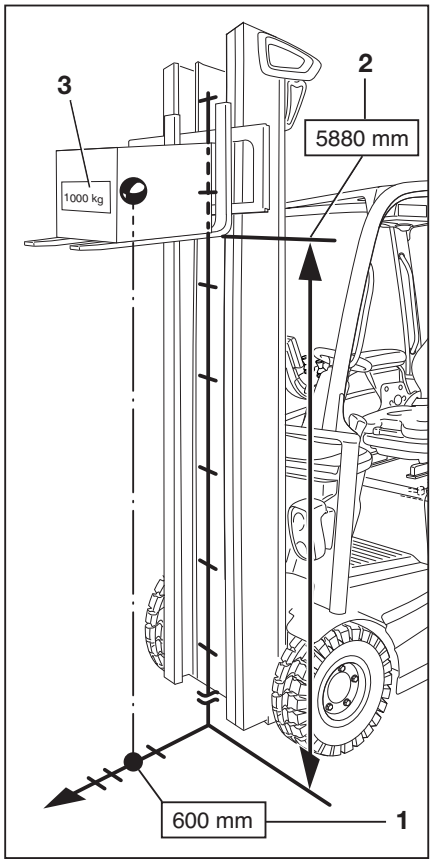

The position numbers in the adjacent graphic correspond to the position numbers on the basic capacity rating plate.

1 Distance between the load centre of gravity and the fork back: 600 mm
2 Permissible lift height: 5880 mm
3 Weight of load to be lifted: 1000 kg

The distance between the load centre of gravity and the fork back is 600 mm (1). The lift height should be 5880 mm (2).

This means that the load must not exceed 1000 kg (3) (load capacity).

By implication, this means that, in this example with the distance between the load centre of gravity and the fork back being 600 mm, a 1000-kg load must not be lifted higher than 5880 mm.

The load capacity specified for certain nominal lifts applies up to this nominal lift. If the lift value of the first line is exceeded, the load capacity from the second line applies up to the lift of the second line.

Residual load capacity rating plate for built-in devices and attachments

NOTE

The residual load capacity rating plate for attachments is read according to the same diagram as in the example for the basic capacity rating plate.

Some attachments have a standard sideshift or a large sideshift. As a rule, the standard sideshift is ±100 mm and the large sideshift is 230 mm.

In contrast to the large sideshift, the standard sideshift offers a higher load capacity, but only within the scope of the specified standard sideshift.

A large sideshift enables a strongly off-centre load position. A large centre offset of the load results in a large reduction in the load capacity of the truck.

Since non-integrated attachments can be replaced, multiple residual load capacity rating plates for attachments on one truck are possible. The residual load capacity rating plate then applies to the attachment fitted. In the case of integrated attachments, only the applicable capacity rating plate is fitted to the truck.

– If there is a built-in device or attachment with a large sideshift on the truck, take into account the maximum possible sideshift on the capacity rating plate.

▷

XZP150+100x40x1200						h(mm)
S=230mm	Q (kg)		220	260	290	6580
			430	510	560	5870
			500	590	650	5230
			570	670	740	4750
			780	920	1000	4100
			800	600	500	c(mm)

Residual load capacity rating plate for large sideshift, S = 230 mm

A second residual load capacity rating plate for the same attachment but with standard sideshift (usually ±100 mm) may also be fitted on the truck. This residual load capacity rating plate offers a higher load capacity, but only within the scope of the specified standard sideshift. If the standard sideshift is exceeded, the residual load capacity rating plate applies to the maximum possible sideshift. The driver is responsible for complying with the

load capacity and sideshift information on the residual load capacity rating plate. If in doubt, use the load capacity for the maximum possible sideshift.

▷

XZP150+100x40x1200						h(mm)
S=100mm	Q (kg)		430	510	560	6580
			570	670	740	6130
			640	750	820	5880
			710	840	880	5230
			850	1000	1090	4800
			800	600	500	c(mm)

Residual load capacity rating plate for standard sideshift, S = 100 mm

Special capacity rating plate for off-centre loads

If unbalanced loads are regularly transported, a special capacity rating plate for off-centre loads is required. If this plate is required at a later date, contact the authorised service centre. This requires information on the type and appearance of the load.

Load measurement (variant)

Description

Knowing the weight of the load to be transported gives the driver greater security. If the truck is equipped with the "load measurement" (variant) comfort feature, the weight of the lifted load can be measured and shown in the display-operating unit.

Load measurement is possible only when the truck is at a standstill. Before performing a load measurement, the load must be raised to a height of 300-800 mm above the ground.

The load measurement has an accuracy of +/-3% of the rated capacity of the truck.

NOTE

In order to ensure accuracy at all times, a zero adjustment of the load measurement must be carried out. Zero adjustment is required.

- *as part of daily commissioning*
- *After changing the fork arms*
- *After fitting or changing attachments*

Performing the load measurement

DANGER

Risk of accident from falling load!

The load may fall if the load centre of gravity has not been taken into account or the load has not been picked up securely.

– Pick up the load securely; see the chapter entitled "Picking up loads".

CAUTION

If the weight determined by a load measurement exceeds the permissible residual load capacity of the truck, the truck cannot be operated safely.

– Set down and reduce load immediately.

– If necessary, use another truck with sufficient load-bearing capacity.

NOTE

Accurate load measurement is only possible under the following conditions:

- *The hydraulic oil is at normal operating temperature*
- *The load is at rest at the beginning of the load measurement*
- *The load corresponds to at least 10% of the nominal load capacity in trucks with a load capacity of up to 2.5 t*
- *The load corresponds to at least 5% of the nominal load capacity in trucks with a load capacity of 3 t and over*
- *The lift mast is in the vertical position*
- *The fork is not raised to more than 800 mm above the ground*

NOTE

The method of operating the lifting system depends on the operating devices included in the truck's equipment.

– Ensure that the truck has been in operation for a period of time before carrying out the load measurement.

– Set the lift mast to vertical.

– Raise the fork to a height of 300-800 mm.

– Ensure that the load is at rest.

– Press the Softkey (1). ▷

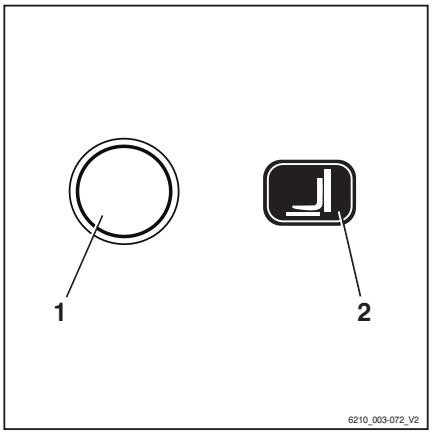

Load measurement is switched on. The (2) symbol is displayed.

NOTE

If the truck is equipped with the operating devices mini-levers or Fingertip operation, then the F1 button can also be pressed as an alternative.

NOTE

During the following process, the fork carriage must be lowered slightly and then stopped abruptly. While doing so, the fork must not touch the ground, otherwise the load measurement will not be accurate. To stop the lowering procedure quickly, release the operating device for lowering so that it jumps into the zero position.

– Lower the fork carriage slightly and release the operating device.

NOTE

When stopping the lowering process the load must be cushioned in order to create a measurable impulse.

When load measurement has been performed correctly, the determined load weight (3) is shown on the display. ▷

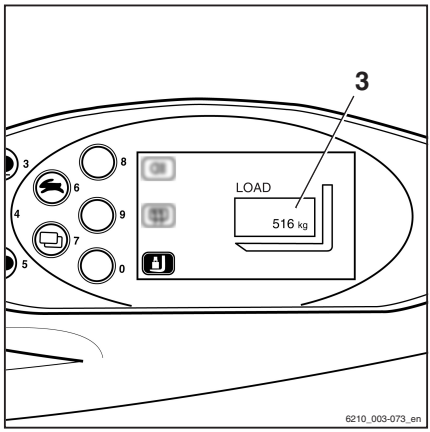

NOTE

If the load measurement is invalid, the value "-9999 kg" is displayed in the display-operating unit.

Picking up loads

To make sure that the load is securely supported, it must be ensured that the fork arms are sufficiently far apart and are positioned as far as possible under the load.

If possible, the load should rest on the back of the fork.

The load must not protrude too far over the fork tips, nor should the fork tips protrude too far out from the load.

Loads are to be picked up and transported as close to the middle as possible.

⚠ DANGER

Risk of accident from a falling load!

When transporting small items, attach a load safety guard (variant) to prevent the load from falling on the driver.

A closed roof covering (variant) should also be used.

Removable roof panels may not be removed.

Adjusting the fork

▷

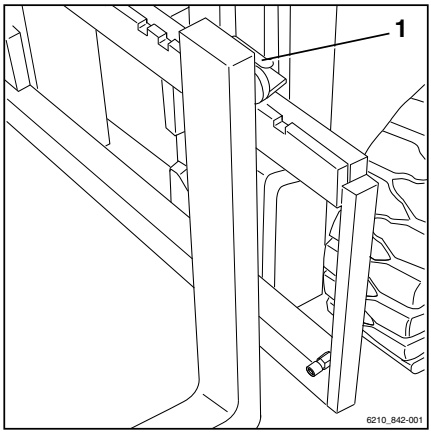

– Lift the locking lever (1) and move the fork arms to the desired position.

– Allow the locking lever to snap back into place.

The load centre of gravity must be midway between the fork arms.

– Only actuate the fork prong positioner (variant) when the fork is not carrying a load.

Danger area

The danger area is the area in which people are at risk due to the movements of the truck, its working equipment, its load-carrying equipment (e.g. attachments) or the load. Also included are the areas where loads could fall or working equipment could fall or be lowered.

⚠ DANGER

Risk of injury!

– Do not step on the fork.

⚠ DANGER

Risk of injury!

– Do not step under the raised forks.

⚠ DANGER

People may be injured in the danger area of the truck!

The danger area of the truck must be completely clear of all personnel, except the driver in his normal operating position. If persons fail to leave the danger area despite warnings:

– Cease work with the truck immediately.

– Secure the truck against use by unauthorised parties.

⚠ DANGER

Danger of death from falling loads!

– Never walk or stand underneath suspended loads.

Transporting pallets

As a rule, loads (e.g. pallets) must be transported individually. Transporting multiple loads at the same time is only permitted:

- when instructed by the supervisor and
- when the technical requirements have been met.

The driver must ensure proper condition of the load. Only safely and carefully positioned loads may be transported.

▷

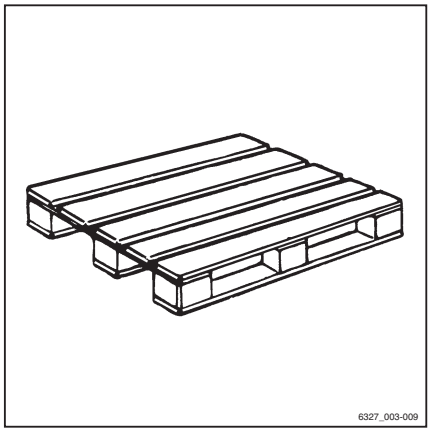

Transporting suspended loads

Before transporting suspended loads, consult the national regulatory authorities (in Germany, the employer's liability insurance associations).

National regulations may place restrictions on these operations, e.g. in Italy. Contact the relevant authorities.

If there are no country-specific regulations for suspended loads in the country of use, the following instructions for safe handling must be observed.

⚠ DANGER

Suspended loads that begin to swing can result in the following risks:

- Impaired braking and steering movement
- Tipping over the load wheels or drive wheels
- Tipping the truck at right angles to the drive direction
- Risk of crushing of guide persons
- Reduced visibility

⚠ DANGER

Loss of stability!

Slipping or swinging suspended loads can lead to a loss of stability and cause the truck to tip over.

– When transporting suspended loads, observe the following instructions.

Instructions for transporting suspended loads:

- Swinging loads must be prevented by using the proper driving speed and driving style (careful steering, braking).
- Hanging loads must be hooked on to the truck in such a way that the harness cannot shift or release unintentionally and cannot be damaged.
- When transporting suspended loads, suitable aids (e.g. guy wires or supporting poles) must be available so that accompanying persons can guide suspended loads and prevent the loads from swinging.

- Take particular care to ensure that there is no one in the drive direction in the driving lane.
- If, despite this, the load begins to swing, ensure that no person is placed at risk.

⚠ DANGER

Risk of accident!

When transporting suspended loads, never perform or end driving and load movements abruptly.

Never drive on slopes with a suspended load.

Transporting containers holding fluids as hanging loads is not permitted.

Load pick up

⚠ DANGER

There is a risk to life caused by a falling load or if parts of the truck are being lowered.

– Never walk or stand underneath suspended loads or raised fork arms.

– Never exceed the maximum load values specified on the capacity rating plate. Otherwise, stability cannot be guaranteed.

– Only store pallets which do not exceed the specified maximum size. Damaged loading equipment and incorrectly formed loads must not be stored.

– Attach or secure the load to the load-carrying equipment so that the load cannot move or fall.

– Store the load so that the specified aisle width is not reduced by protruding parts.

– Approach the racking carefully, brake gently and stop just in front of the racking. ▷

– Position the forks. ▷
– Set lift mast to vertical.
– Lift the fork carriage to the stacking height.

⚠ CAUTION

Component damage possible!

When inserting the fork into the racking, ensure that the racking and load are not damaged.

– Insert the fork as far under the load as possible. Stop the truck as soon as the fork back is resting on the load. The centre of gravity of the load must be positioned between the fork arms in the middle. ▷

– Lift the fork carriage until the load is resting entirely on the forks. ▷

⚠ DANGER

Risk of accidents!

– Beware of any people in the danger area.
– Ensure that the roadway behind you is clear.

⚠ DANGER

Never tilt the lift mast with a raised load due to the risk of tipping!

– Lower the load before tilting the lift mast.

– Move backwards carefully and slowly until the load is clear of the racking. Brake gently.

– Lower the load while maintaining ground clearance. ▷

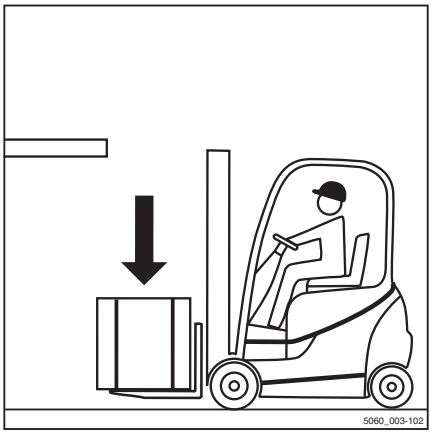

– Tilt the lift mast backwards. ▷

The load can be transported.

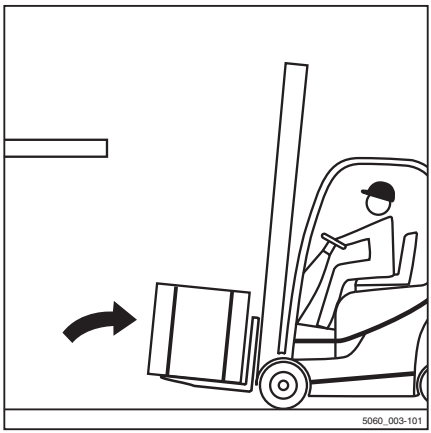

Transporting loads

NOTE

Observe the information in the chapter entitled "Safety regulations when driving".

DANGER

The higher a load is lifted, the less stable it becomes. The truck can tip over or the load can fall, increasing the risk of accident!

Driving with a raised load and the lift mast tilted forward is not permitted.

- Only drive with the load lowered.
- Lower the load until ground clearance is reached (not over 300 mm).
- Only drive with the lift mast tilted backwards.

- Drive slowly and carefully round corners!

NOTE

Observe the information in the chapter entitled "Steering".

- Always accelerate and brake gently!

NOTE

Observe the information in the chapter entitled "Operating the service brake".

– Never drive with a load protruding to the side (e.g. with the sideshift)!

▷

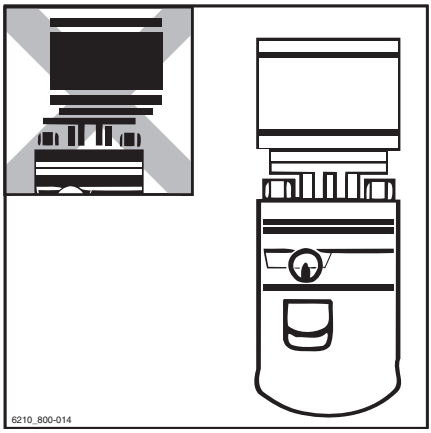

Determining visibility conditions when driving with a load

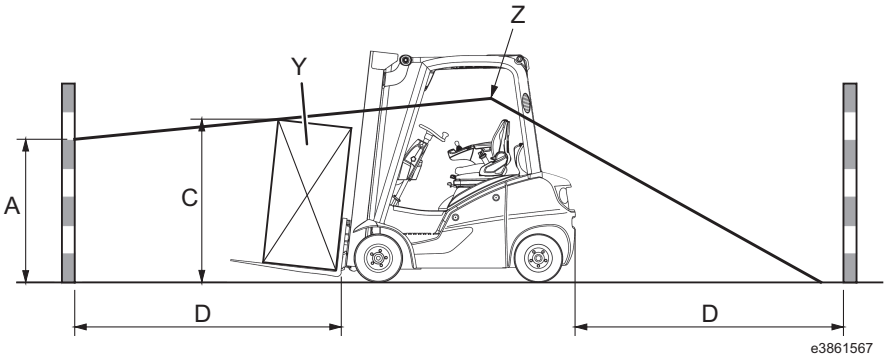

A	Area that is not visible (max. 1085 mm)	Y	Load (varies depending on operator)
C	Load height (in driving position)	Z	Driver's eye level
D	4000 mm (distance to the front from the rear corner of the load when it is positioned on the fork carriage in the driving position)		

The driver's field of vision can be severely limited when driving with a larger load or with attachments fitted. In this case, safe operation is no longer guaranteed.

Visibility conditions can be evaluated by determining the size of the area that is not visible (A).

Procedure:

- The driver moves into position in his seat.
- The area that is not visible (A) is determined based on the load (Y) and the length of the route (D).
- If the area that is not visible exceeds 1085 mm (EN16842-2/A3), the visibility conditions are inadequate.

In the case of inadequate visibility conditions, the following measures are possible:

- Reverse travel (see illustration)
- Splitting the loads
- Optimising the transport routes
- Using support staff, e.g. as a guide

The operating company must complete a risk analysis in order to evaluate visibility obstructions that may be encountered during operation.

The risks of poor visibility due to the load must be weighed against the risk of health-related consequences due to the upper body being twisted during reverse travel.

A rotary seat can be used to assist the driver when reversing.

Contact your service partner.

NOTE

Any applicable national regulations must be observed.

Setting down loads

DANGER

Risk of accident due to changed moment of tilt!

The load centre of gravity and the moment of tilt move due to tilting the lift mast forwards with a raised load or due to the load slipping. The truck may tip forwards.

– Only tilt the lift mast forwards with a raised lifting accessory when it is directly above the stack.
– When the lift mast is tilted forwards, take particular care to ensure that the truck does not tip forwards and that the load does not slip.

⚠ WARNING

Risk of accident from a falling load!

If the fork or the load remains suspended during lowering, the load may fall.

– When removing from stock, move the truck far enough back so that the load and the fork can be lowered freely.

– Drive up to the stack with the load lowered in accordance with regulations. ▷

– Set lift mast to vertical.

– Lift the load to the stacking height.

– Drive the truck towards the rack carefully.

– Lower the load until it rests securely on the rack. ▷

⚠ DANGER

Risk of accident!

– Beware of any people in the danger area.

– Ensure that the roadway behind you is clear.

– Move the truck back until the fork arms can be lowered without touching the stack.

– Lower the fork while maintaining ground clearance.

– Tilt the lift mast backwards and drive away.

Driving on lifts

The driver may only use this truck on lifts with a sufficient rated capacity and for which the operating company has been granted authorisation.

⚠ DANGER

There is a risk to life if you are crushed or run over by the truck.

- There must be no personnel already in the lift when the truck is driven into the lift.
- Personnel are only permitted to enter the lift once the truck is secure, and must exit the lift before the truck is driven out.

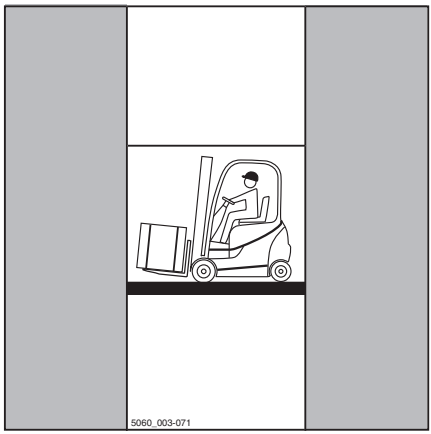

Determining the actual total weight

- Park the truck securely.
- Determine the unit weights by reading the truck nameplate and, if necessary, the attachment (variant) nameplate and, if necessary, by weighing the load to be lifted.
- Add the determined unit weights to obtain the actual total weight of the truck:

  Tare weight (1)

  \+ Ballast weight (variant) (2)

  \+ Attachment net weight (variant)

  \+ Weight of the load to be lifted

  \+ 100 kg allowance for driver

  = Actual total weight

- Drive the truck with the forks forwards into the lift without touching the shaft walls.
- Park the truck securely in the lift to prevent uncontrolled movements of the load or the truck.

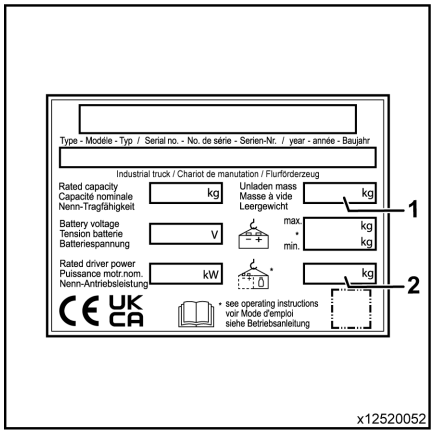

Driving on loading bridges

DANGER

Risk of accident if the truck crashes!

Steering movements can cause the tail end to veer off the loading bridge towards the edge. This may cause the truck to crash.

The lorry driver and the truck driver must agree on the lorry's departure time.

- Before driving across a loading bridge, ensure that it is properly attached and secured and has a sufficient load capacity (lorry, bridge etc.).
- Drive slowly and with care on the loading bridge.
- Ensure that the vehicle onto which you will be driving is secured to prevent it from shifting and that it can support the load of the truck.

Determining the actual total weight

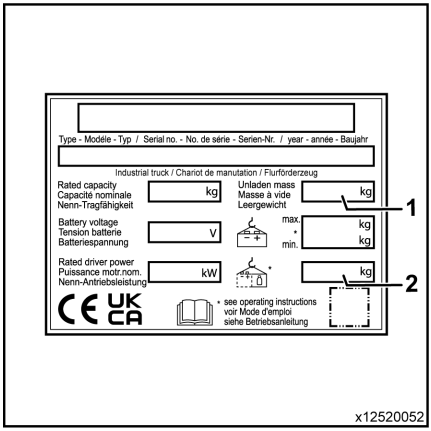

- Park the truck securely.
- Determine the unit weights by reading the truck nameplate and, if necessary, the attachment (variant) nameplate and, if necessary, by weighing the load to be lifted.
- Add the determined unit weights to obtain the actual total weight of the truck:

  Tare weight (1)

  \+ Ballast weight (variant) (2)

  \+ Attachment net weight (variant)

  \+ Weight of the load to be lifted

  \+ 100 kg allowance for driver

  = Actual total weight

Particle filter system

Particle filter - Function

⚠ DANGER

Risk to health from exhaust gases! Exhaust gases from internal combustion engines are harmful to your health. In particular, the soot particles contained in the diesel exhaust gas can cause cancer. Allowing the internal combustion engine to idle represents a risk of poisoning from the CO, CH and NO_x components contained in the exhaust gas.

Modern exhaust gas treatment systems (e.g. catalytic converters, particle filters or comparable systems) can clean exhaust gases in a way that reduces the health hazard and risk of poisoning when operating the truck.

- Observe the national laws and regulations when using trucks with an internal combustion engine in entirely or partially enclosed working areas.
- Always ensure that there is sufficient ventilation available.

This truck is equipped with a closed particle filter system that filters carcinogenic soot particles out of the exhaust gas and collects them in the particle filter.

The use of a particle filter is recommended for applications in closed halls with a low degree of ventilation.

Operating principle during normal operation

The soot particles that are filtered out of the exhaust gas and collected in the filter are removed by means of a continuous regeneration process.

This process requires a sufficiently high exhaust gas temperature, which is also reached during normal operation. The truck is then used to such a degree that it burns off the soot during operation. The driver must not interfere with this process. No other consumables (e.g. additives) are required.

Operating principle during low-load operation

If the truck is used little, a sufficiently high exhaust gas temperature may not be reached. In addition, very low ambient temperatures may

prevent a sufficiently high exhaust gas temperature being reached. This causes the regeneration process to be disrupted. The soot filtered out of the exhaust gas then collects in the particle filter, as it is not burned off during the continuous regeneration process. In this case, a parked regeneration of the particle filter must be performed. This regeneration process, which takes approx. 30 minutes, can only be performed when the truck is stationary, meaning the truck cannot be used during this time. The driver is informed of the need for a parked regeneration in advance by means of corresponding messages on the display and operating unit. Details of these messages are provided in the chapter entitled "Messages regarding parked regeneration on the display and operating unit".

Interrupting parked regeneration

Releasing the parking brake during parked regeneration interrupts the parked regeneration process.

In the display and operating unit, the following message appears: `PARK. REG. ERROR`.

NOTE

If regeneration is interrupted too frequently, additional engine maintenance may be required from the authorised service centre.

– Apply the parking brake.

– Restart parked regeneration.

The restarted parked regeneration requires another 30 minutes to complete, no matter how complete the interrupted parked regeneration was.

If the display message `PARK. REG. ERROR` appears more than twice in succession without the parking brake being released during parked regeneration, there may be a malfunction in the internal combustion engine.

– Notify the authorised service centre.

Particle filter - Performing parked regeneration

⚠ CAUTION

Risk of damage to components! If parked regeneration is not performed when required, the particle filter may become damaged.

A full parked regeneration must be performed in order to completely empty the particle filter.

⚠ CAUTION

During the parked regeneration process, very hot combustion gases escape from the exhaust pipe!

The parked regeneration must not be performed in areas containing hazardous materials or highly flammable materials, or in a hall. In addition, the following instructions must be observed exactly.

Rules of behaviour for parked regeneration

During parked regeneration, the surface temperature of the exhaust system is higher than the usual operating temperature. This can cause adhering dust and oils to ignite.
If the truck is operated with an exhaust gas extraction unit, parked regeneration is not permitted. The operating company must determine whether parked regeneration is permitted where the truck is being used or whether the truck must be moved to a separate area for this purpose.

The parked regeneration must be carried out while the internal combustion engine is running. During the regeneration process, the truck automatically changes the speed of the internal combustion engine. The driver cannot influence this change. If the parked regeneration requested by the truck is not performed and this remains the case for an extended period of time, the particle filter may become damaged. If this happens, it would need to be repaired by your authorised service centre.

⚠ WARNING

There is a risk of fire and burns during parked regeneration due to very hot exhaust gases! During parked regeneration, high temperatures occur in the particle filter, in the exhaust system and in the surrounding area.

- Observe the company directive from the operating company.
- Always thoroughly clean dust, oils and other settling substances from the exhaust gas system
- Remove any connected exhaust gas extraction units
- Perform parked regeneration only under supervision and in a suitable place.
- Do **not** perform parked regeneration in the vicinity of combustible materials.
- The driver's cab must always be accessible so that parked regeneration can be aborted at any time.
- Monitor the truck throughout the entire parked regeneration process.
- If leaks occur in the exhaust system, take the truck out of operation and inform the authorised service centre.

NOTE

Parked regeneration can only be performed if the parking brake is engaged. If the parking brake is not engaged, `APPLY HANDBRAKE!` *appears on the display.*

Performing parked regeneration

As soon as the message `EXH.GAS PURIFIER` appears in the display-operating unit, parked regeneration can be performed. To do this, proceed as follows:

- Park the truck in a place that is suitable for parked regeneration.

– Switch the key switch (1) to position "0" and wait until the display has switched off.

– Turn the key switch back to the "I" position.

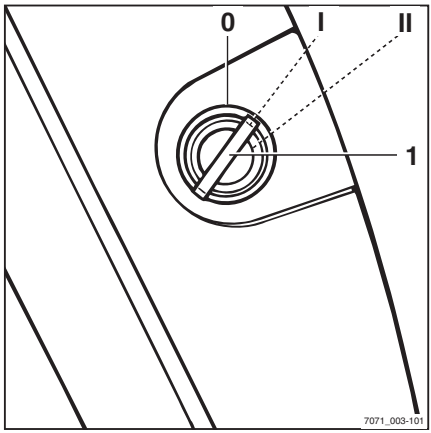

The message `START PARK. REG.?` as well as the softkeys OK (1) and ESC (2) appear on the display.

– To start the parked regeneration process, press the OK button (1).

The message `START IC ENGINE` appears on the display.

– To interrupt the parked regeneration process, press the ESC button (2).

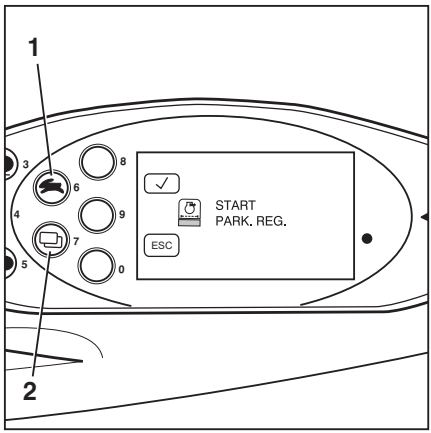

– Start the engine. To do this, turn the switch key (1) to position "II" and hold it there until the engine has started. Then release the switch key. ▷

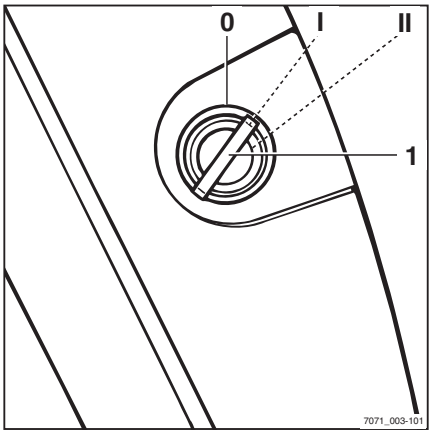

The particle filter regeneration process is started. `EXH.GAS PURIFIER PLEASE WAIT` appears on the display. The status bar (4) below the message indicates the progress of the regeneration process. ▷

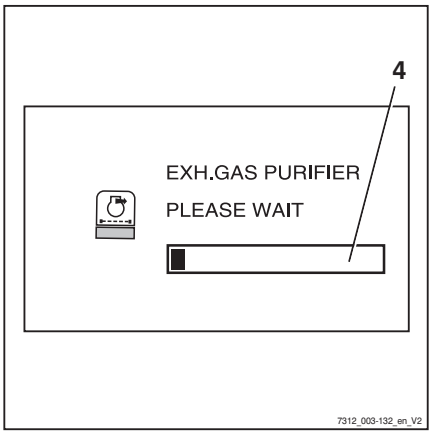

NOTE

During parked regeneration, the engine speed fluctuates and the power of the radiator fan is reduced. The drive unit and the hydraulic controller are switched off and do not respond when the corresponding operating devices are actuated.

If the status bar disappears and `REGENERATION COMPLETED` appears on the display, the parked regeneration process is complete. The truck is ready for operation again.

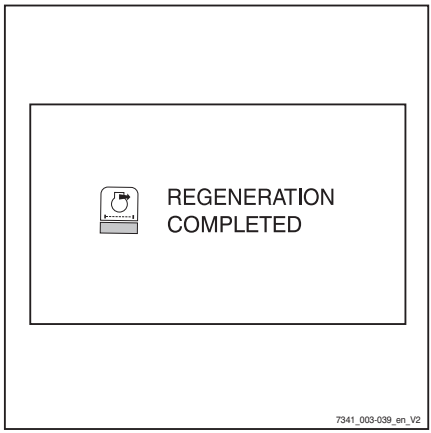

NOTE

The system requests parked regeneration every 500 operating hours at the latest if it has not already been performed due to soot accumulation in the particle filter. The message `EXH.GAS PURIFIER` *appears on the display and parked regeneration must be performed.*

Particle filter - Displays

NOTE

To guarantee economic use of the truck, it is important to follow the specifications in these operating instructions exactly. If notes about particle filter regeneration shown on the screen of the display and operating unit are not observed, this can lead to longer truck downtimes.

The following table describes the messages that appear on the display and operating unit relating to parked regeneration and if parked regeneration is not performed:

Messages	Meaning	Comment
`EXH.GAS PURIFIER`	Carry out parked regeneration of the particle filter.	See the section entitled "Performing parked regeneration"
`START` `PARK. REG.?`	Prompt asking whether parked regeneration of the particle filter should now be performed.	
`START IC ENGINE`	Request to start the engine.	
`EXH.GAS PURIFIER` `PLEASE WAIT`	The particle filter is being regenerated.	A status bar shows the regeneration progress.
`REGENERATION` `COMPLETED`	The parked regeneration process is complete.	The truck is ready for operation again.

PARK. REG. URGENT! ! !	Parked regeneration of the particle filter is urgently required.	Until parked regeneration has been carried out, the maximum speed of the truck is reduced to 2 km/h. The lifting speed is restricted.
PARK. REG. ERROR	Regeneration was interrupted due to an error.	The parking brake was released during parked regeneration. Apply the parking brake and restart regeneration. If the message appears more than twice in succession without the parking brake being released during parked regeneration, there may be a malfunction in the internal combustion engine. In this case, notify your authorised service centre.
ASH LOAD	The particle filter has become clogged with ash. Repair must be performed by the authorised service centre.	
EXH.GAS PURIFIER SERVICE! ! !	Because regeneration has not been performed, the particle filter system must be repaired by the authorised service centre. To avoid further damage, take the truck out of operation until the repair has been performed.	Until the particle filter system has been repaired, the maximum speed of the truck is reduced to 2 km/h. The lifting speed is significantly restricted.

Attachments

Fitting attachments

If the truck is equipped with an integrated attachment (variant) at the factory, the specifications in the STILL operating instructions for integrated attachments must be observed.

If attachments are fitted at the place of use, the specifications in the operating instructions from the attachment manufacturer must be observed.

If an attachment is not delivered together with the truck, the specifications from the manufacturer and the operating instructions from the attachment manufacturer must be observed.

Before initial commissioning, the function of the attachment and the visibility from the driver's position with and without a load must be checked by a competent person. If the visibility is deemed insufficient, visual aids must be used, such as mirrors, a camera/monitor system etc.

Observe the following warning notices.

⚠ DANGER

Risk of fatal injury from falling load!

If attachments that hold the load by clamping it or exerting pressure on it do not have a second method of operating the function (lock), the load can work loose and fall off.

- If such attachments are retrofitted, also retrofit a second operating function (lock) to be actuated.
- Ensure that the second method of operating the function (lock) is available.

⚠ DANGER

Risk of fatal injury from falling load!

If a clamping attachment with integrated sideshift function is installed, the clamp must not open when the sideshift is operated.

- Notify your authorised service centre before installation.
- Never grab or climb on moving parts of the truck.
- Ensure that the clamp does not open when the sideshift is actuated.

⚠ WARNING

Risk of accident due to incorrect labelling!

The use of attachments can cause accidents if the labelling is incorrect or missing. If there is not an attachment-specific residual load capacity rating plate on the truck and not all operating devices are marked with appropriate pictograms, incorrect operation is possible. The truck must not be used with incorrect or missing identification.

- Use only CE-certified attachments that include operating instructions and the required identification.
- When used in the UK, ensure that the attachments are UKCA-certified and have the required identification.
- Have an attachment-specific residual load capacity rating plate and the pictograms for the operating devices attached to the truck.
- Arrange for the authorised service centre to adjust the hydraulic system to the requirements of the attachment (e.g. the pump motor speed).

NOTE

If the required labelling is not provided with the attachment, contact the authorised service centre promptly.

Hydraulic connection

▷

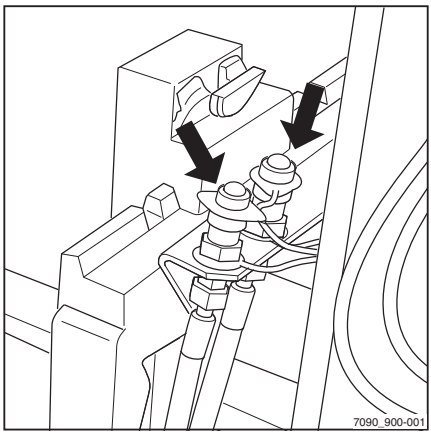

- Before fitting the attachment, release the pressure from the hydraulic system.

⚠ CAUTION

Risk of damage to components!

Open connections of plug connectors can become dirty. The plug connectors can become stiff and dirt can enter the hydraulic system.

- Once the attachment has been disassembled, attach the protective caps to the plug connectors.

⚠ CAUTION

Possible oil loss if attachments are changed frequently!

Hydraulic oil may be lost each time attachments are changed.

- If attachments are changed frequently, check the hydraulic oil level regularly; if necessary, fill up with hydraulic oil.

Mounting attachments

Mounting an attachment and connecting the energy supply for an attachment must only be performed by competent persons in accordance with the information provided by the manufacturer and supplier of the attachment. After each installation, the attachment must be checked for correct function prior to initial commissioning.

NOTE

Please observe the definition of the following responsible person: "competent person".

Load capacity with attachment

The permissible load capacity of the attachment and the allowable load (load capacity and load moment) of the truck must not be exceeded by the combination of attachment and payload. The specifications of the manufacturer and supplier of the attachment must be complied with.

– Observe the residual load capacity rating plate, see the chapter entitled "Picking up a load using attachments".

Releasing the pressure from the hydraulic system ▷

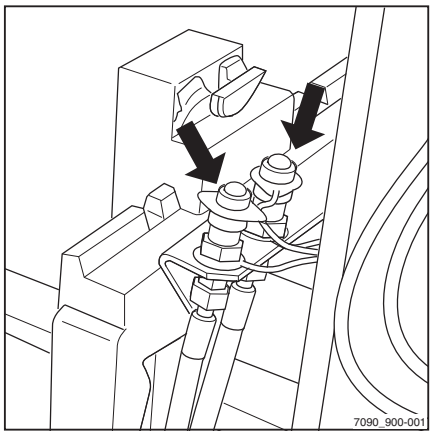

Prior to assembling attachments, the pressure must be released from the plug connectors (arrows).

Attachments may be assembled only by competent persons in accordance with the information provided by the manufacturer and supplier of the attachments. After each installation, the function of the attachments must be checked prior to initial commissioning.

NOTE

The pressure release procedure is dependent on the operating devices for controlling the hydraulic functions; see the chapter entitled "Lifting system operating devices".

Releasing the pressure

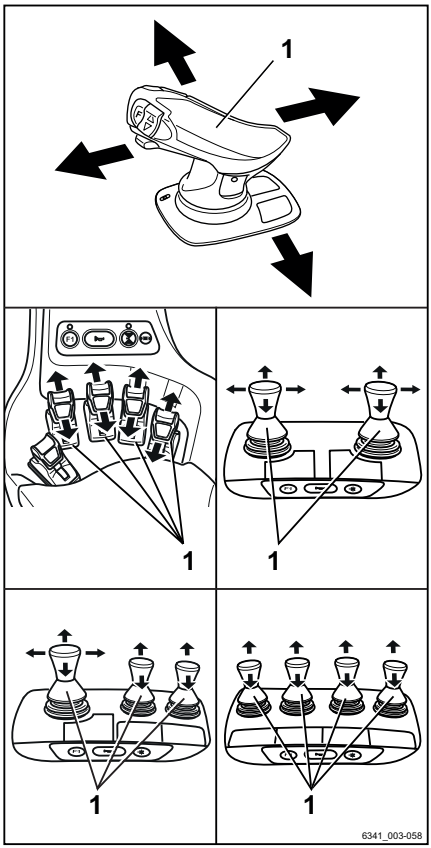

NOTE

In trucks with the "FleetManager" or "access authorisation with PIN code" equipment variants, access authorisation must be enabled.

- Switch on the key switch. Do **not** start the engine.
- Wait two to three seconds.
- Lower the fork carriage fully.
- Tilt the lift mast back to the stop.
- Switch on the hazard warning system (variant).

NOTE

Press the button for switching on the hazard warning system even if the truck is not equipped with a hazard warning system. Switching on the hazard warning system prevents the electrical system from being switched off, even if the key switch is subsequently switched off.

- Repeatedly actuate all the operating levers (1) for controlling the hydraulic functions in the directions of the arrows as far as the end positions.

The valves open and the hydraulic system is depressurised.

- Switch off the key switch.

General instructions for controlling attachments

The way in which attachments (variant) are controlled depends on the operating devices included in the truck's equipment.

Essentially, a distinction is drawn between:

- **Double mini-lever**
- **Double mini-lever and 5th function** (variant)
- **Triple mini-lever**
- **Triple mini-lever with a 5th function** (variant)
- **Quadruple mini-lever**
- **Quadruple mini-lever with a 5th function** (variant)
- **Joystick 4Plus**
- **Joystick 4Plus with a 5th function** (variant)
- **Fingertip**
- **Fingertip with a 5th function** (variant)

– For information on controlling attachments with the respective operating devices, see the relevant sections in this chapter.

⚠ WARNING

Use of attachments can give rise to additional hazards such as a change in the centre of gravity, additional danger areas etc.

Attachments must only be deployed for their intended use as described in the relevant operating instructions. Drivers must be taught how to operate the attachments.

Loads may only be picked up and transported with attachments if the loads are securely grasped and attached. Where necessary, loads must also be secured against slipping, rolling away, falling over, swinging or tipping over. Note that any change to the position of the load centre of gravity will affect the stability of the truck.

– Refer to the capacity rating plate for the attachments being used.

⚠ WARNING

If several hydraulic functions are used at the same time, these functions can influence each other.

For example, if the fork carriage is raised and an attachment is operated at the same time, this may change the lifting speed or the operating speed of the attachment.

NOTE

Further variants and functions are available in addition to the functions described below. The directions of movement can be seen in the pictograms on the operating devices.

NOTE

All the attachments described fall into the category of equipment variants. Please see the respective operating instructions for an exact description of the respective movements/actions of the attachment fitted.

With fleet manager access authorisation (variant), the fleet manager can adjust the speed of the auxiliary hydraulics for attachments.

– See also the section entitled "Adjusting the hydraulic speed for attachments" in this chapter.

Controlling attachments using a double mini-lever ▷

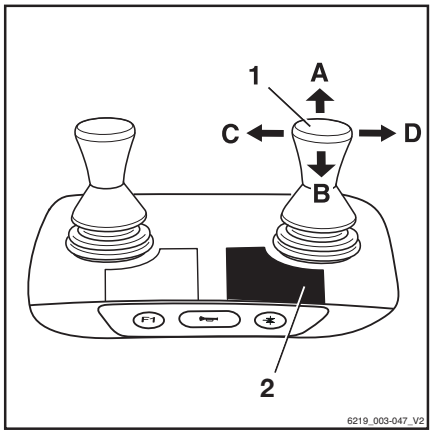

In this version, the attachments (variant) are controlled using the "attachments" cross lever (1). The adhesive label bearing the pictograms for the hydraulic functions (2) is affixed at the designated point.

– If the adhesive label becomes illegible or is not present, please contact your authorised service centre.

– Observe the pictograms for the attachment functions on the adhesive label (2).

The pictograms on the "attachments" cross lever (1) show the respective functions that are activated by this lever.

The pictograms are arranged according to the direction of movement of the "attachments" cross lever (1).

The following applies:

– Move the "attachments" cross lever(1) in the direction of arrow (A), (B), (C) or (D).

The attachment moves accordingly in the directions (A), (B), (C) or (D) as shown in the pictogram.

Pictogram	Attachment function
	Move side shift frame or fork forwards
	Move side shift frame or fork backward
	Move side shift to the left
	Move side shift to the right
	Adjust fork arms: open
	Adjust fork arms: close
	Release load retainer
	Clamp load retainer
	Open clamps
	Close clamps
	Rotate to the left
	Rotate to the right
	Tip shovel over
	Tip shovel back

NOTE

The pictograms are affixed according to the attachment fitted at the factory. If an attachment with different functions is fitted, the authorised service centre must check that the pictograms bear the correct representation and must change them if necessary.

Clamp locking mechanism

▷

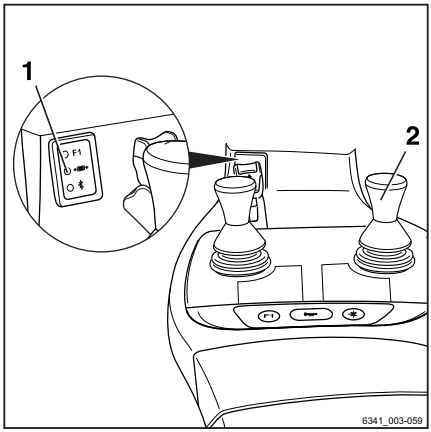

– To release the clamp locking mechanism, push the operating lever (2) forwards.

The clamp locking mechanism is released. The LED for the "clamp release" (1) lights up and remains lit while the clamp locking mechanism is released.

NOTE

The hydraulic function for opening the clamp is available for one second after the clamp locking mechanism is released. After one second, the clamp locking mechanism is automatically reactivated.

– To open the clamp, push the operating lever (2) forwards again.

It is not necessary to release the clamp locking mechanism in order to close the clamp.

– To close the clamp, pull the operating lever (2) backward.

Controlling attachments using the double mini-lever and the 5th function

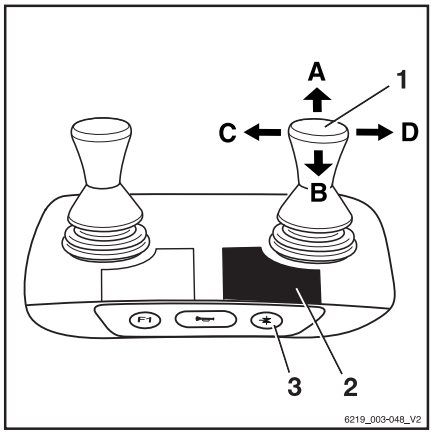

NOTE

For technical reasons, clamping attachments ***must not*** *be controlled via the "5th function".*

The function key for the "5th function" (3) and the cross lever (1) are used to control the "5th function".

The adhesive label bearing the pictograms for the hydraulic functions (2) is affixed at the designated point.

– If the adhesive label becomes illegible or is missing, please contact your authorised service centre.

– Observe the pictograms for the attachment functions on the adhesive label (2).

The pictograms on the "attachments" cross lever show the respective functions that are activated by this lever.

The following applies:

– Actuate the function key for the "5th function" (3).

The LED for the "5th function" ✱ lights up.

– Move the "attachments" cross lever (1) in the direction of the arrow (A), (B), (C) or (D).

The attachment moves accordingly in the directions (A), (B), (C) or (D) as shown in the pictogram.

Example using the pictograms for configuration (1):

If the "attachments" cross lever (1) is moved in the direction of the arrow (A), the fork is extended.

If the function key for the "5th function" (3) is actuated and the "attachments" cross lever (1) is moved in the direction of the arrow (A), the fork arms open.

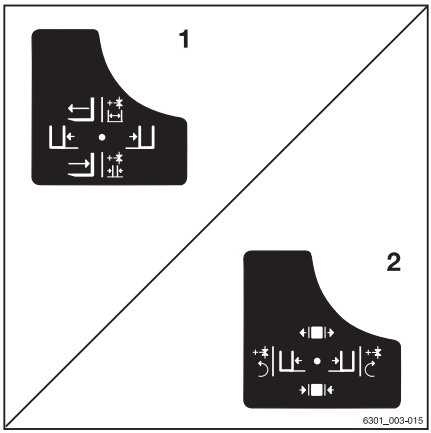

Pictogram	Attachment function
	Auxiliary hydraulics "5th function"
	Move the side shift frame or fork forwards
	Move the side shift frame or fork backwards
	Move the sideshift to the left
	Move sideshift to the right
	Adjust fork arms: open
	Adjust fork arms: close
	Rotate to the left
	Rotate to the right

NOTE

The pictograms are affixed according to the attachment fitted at the factory. If an attachment with different functions is fitted, the authorised service centre must check that the pictograms bear the correct representation and must change them if necessary.

Controlling attachments using a triple mini-lever ▷

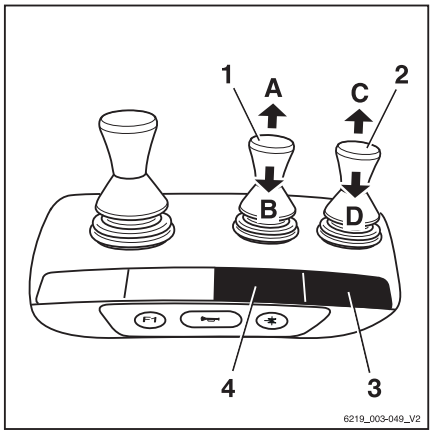

In this version, the attachments (variant) are controlled using the operating levers (1, 2). The adhesive label bearing the pictograms for the hydraulic functions (3) for the operating lever (2) and the adhesive label (4) for the operating lever (1) are affixed at the designated points.

– If the adhesive labels become illegible or are not present, please contact your authorised service centre.

– Observe the pictograms for the attachment functions on the adhesive labels (3, 4).

The pictograms on the operating levers show the respective functions that are activated by these levers.

The following applies:

– Move the operating lever (1) in the direction of the arrow (A) or (B).

The attachment moves accordingly in the directions (A) or (B) as shown in the pictogram.

– Move the operating lever (2) in the direction of the arrow (C) or (D).

The attachment moves accordingly in the directions (C) or (D) as shown in the pictogram.

Pictogram	Attachment function
	Move side shift frame or fork forwards
	Move side shift frame or fork backward
	Move side shift to the left
	Move side shift to the right
	Adjust fork arms: open
	Adjust fork arms: close
	Release load retainer
	Clamp load retainer
	Open clamps
	Close clamps
	Rotate to the left
	Rotate to the right

Picto-gram	Attachment function
	Tip shovel over
	Tip shovel back

NOTE

The pictograms are affixed according to the attachment fitted at the factory. If an attachment with different functions is fitted, the authorised service centre must check that the pictograms bear the correct representation and must change them if necessary.

Clamp locking mechanism

▷

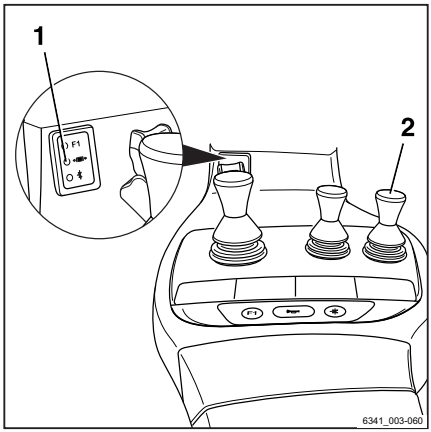

– To release the clamp locking mechanism, push the operating lever (2) forwards.

The clamp locking mechanism is released. The LED for the "clamp release" (1) lights up and remains lit while the clamp locking mechanism is released.

NOTE

The hydraulic function for opening the clamp is available for one second after the clamp locking mechanism is released. After one second, the clamp locking mechanism is automatically reactivated.

– To open the clamp, push the operating lever (2) forwards again.

It is not necessary to release the clamp locking mechanism in order to close the clamp.

– To close the clamp, pull the operating lever (2) backward.

Controlling attachments using the triple mini-lever and the 5th function

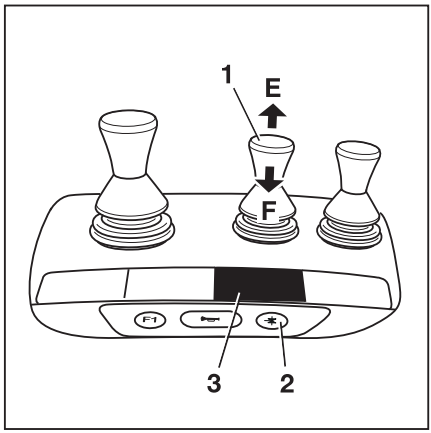

NOTE

For technical reasons, clamping attachments ***must not*** *be controlled via the "5th function".*

The function key for the "5th function" (2) and the operating lever (1) are used to control the "5th function".

The adhesive label bearing the pictograms for the hydraulic functions (3) is affixed at the designated point.

– If the adhesive label becomes illegible or is missing, please contact your authorised service centre.

– Observe the pictograms for the attachment functions on the adhesive label (3).

The pictograms on the operating lever show the respective functions that are activated by this lever.

The following applies:

– Actuate the function key for the "5th function" (2).

The LED for the "5th function" lights up.

– Move the operating lever (1) in the direction (E) or (F).

The attachment moves accordingly in the directions (E) or (F) as shown in the pictogram.

Example using the pictograms for configuration (1):

If the operating lever (1) is moved in the direction of the arrow (E), the sideshift moves to the left.

If the function key for the "5th function" (2) is actuated and the operating lever (1) is moved in the direction of the arrow (E), the fork arms open.

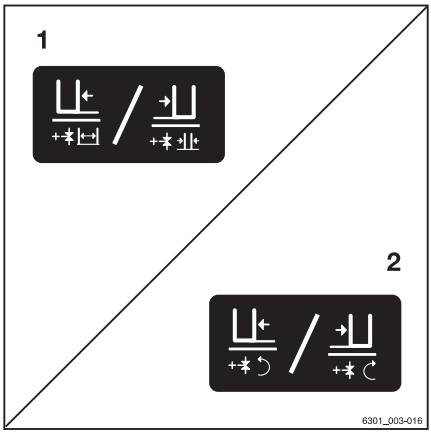

Pictogram	Attachment function
	Auxiliary hydraulics "5th function"
	Move the sideshift to the left
	Move sideshift to the right
	Adjust fork arms: open
	Adjust fork arms: close
	Rotate to the left
	Rotate to the right

NOTE

The pictograms are affixed according to the attachment fitted at the factory. If an attachment with different functions is fitted, the authorised service centre must check that the pictograms bear the correct representation and must change them if necessary.

Controlling attachments using a quadruple mini-lever

In this version, the attachments (variant) are controlled using the operating levers (1, 2). The adhesive label bearing the pictograms for the hydraulic functions (3) for the operating lever (2) and the adhesive label (4) for the operating lever (1) are affixed at the designated points.

– If the adhesive labels become illegible or are not present, please contact your authorised service centre.

– Observe the pictograms for the attachment functions on the adhesive labels (3, 4).

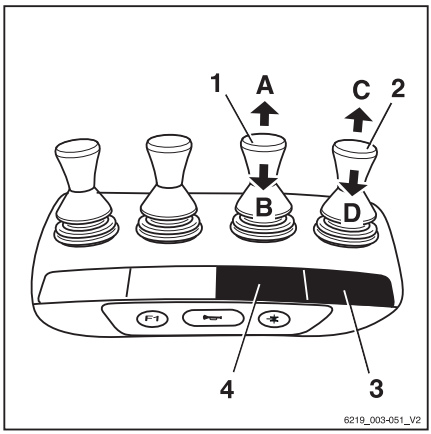

The pictograms on the operating levers show the respective functions that are activated by these levers.

The following applies:

– Move the operating lever (1) in the direction of the arrow (A) or (B).

The attachment moves accordingly in the directions (A) or (B) as shown in the pictogram.

– Move the operating lever (2) in the direction of the arrow (C) or (D).

The attachment moves accordingly in the directions (C) or (D) as shown in the pictogram.

Pictogram	Attachment function
	Move side shift frame or fork forwards
	Move side shift frame or fork backward
	Move side shift to the left
	Move side shift to the right
	Adjust fork arms: open
	Adjust fork arms: close
	Release load retainer
	Clamp load retainer
	Open clamps
	Close clamps
	Rotate to the left
	Rotate to the right
	Tip shovel over
	Tip shovel back

NOTE

The pictograms are affixed according to the attachment fitted at the factory. If an attachment with different functions is fitted, the authorised service centre must check that the pictograms bear the correct representation and must change them if necessary.

Clamp locking mechanism

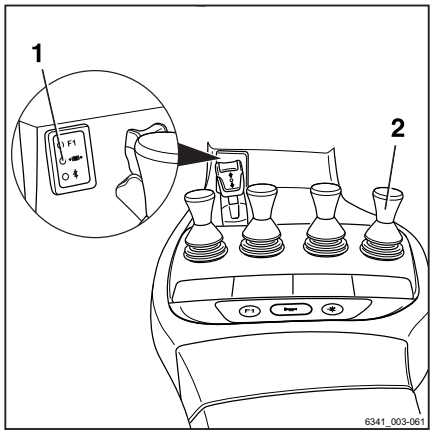

– To release the clamp locking mechanism, push the operating lever (2) forwards.

The clamp locking mechanism is released. The LED for the "clamp release" (1) lights up and remains lit while the clamp locking mechanism is released.

NOTE

The hydraulic function for opening the clamp is available for one second after the clamp locking mechanism is released. After one second, the clamp locking mechanism is automatically reactivated.

– To open the clamp, push the operating lever (2) forwards again.

It is not necessary to release the clamp locking mechanism in order to close the clamp.

– To close the clamp, pull the operating lever (2) backward.

Controlling attachments using the quadruple mini-lever and the 5th function

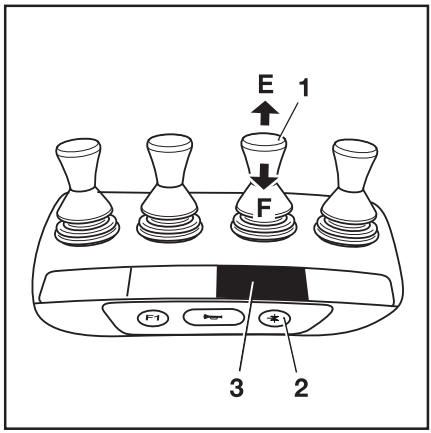

NOTE

For technical reasons, clamping attachments ***must not*** *be controlled via the "5th function".*

The function key for the "5th function" (2) and the operating lever (1) are used to control the "5th function".

The adhesive label bearing the pictograms for the hydraulic functions (3) is affixed at the designated point.

– If the adhesive label becomes illegible or is missing, please contact your authorised service centre.

– Observe the pictograms for the attachment functions on the adhesive label (3).

This essentially involves the following:

– Actuate the function key for the "5th function" (2).

The LED for the "5th function" lights up.

– Move the operating lever (1) in the direction (E) or (F).

The attachment moves accordingly in the directions (E) or (F) as shown in the pictogram.

Example using the pictograms for configuration (1):

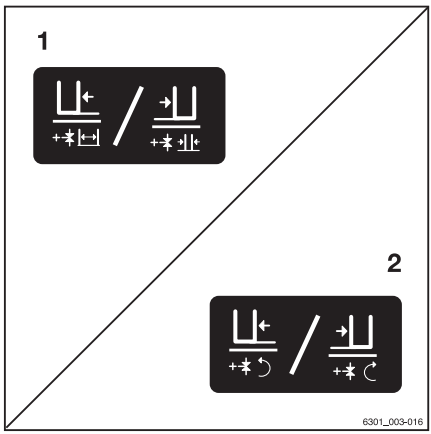

If the operating lever (1) is moved in the direction of the arrow (E), the sideshift moves to the left.

If the function key for the "5th function" (2) is actuated and the operating lever (1) is moved in the direction of the arrow (E), the fork arms open.

Pictogram	Attachment function
	Auxiliary hydraulics "5th function"
	Move the sideshift to the left
	Move sideshift to the right
	Adjust fork arms: open

Picto-gram	Attachment function
	Adjust fork arms: close
	Rotate to the left
	Rotate to the right

NOTE

The pictograms are affixed according to the attachment fitted at the factory. If an attachment with different functions is fitted, the authorised service centre must check that the pictograms bear the correct representation and must change them if necessary.

Controlling attachments using the Joystick 4Plus

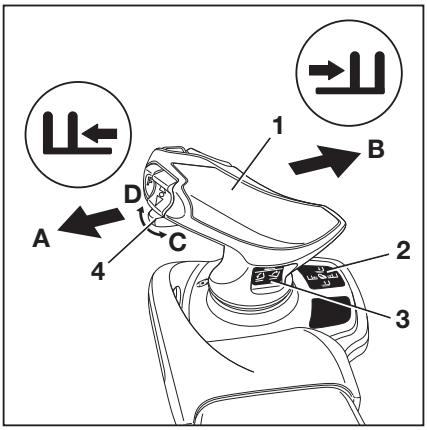

In this version, the attachments (variant) are controlled via the Joystick 4Plus (1) and the slider (4). The adhesive label bearing the pictograms for the hydraulic functions (2) for the Joystick 4Plus (1) and the adhesive label (3) for the slider (4) are affixed at the designated points.

– If the adhesive labels become illegible or are not present, please contact your authorised service centre.

– Observe the pictograms for the attachment functions on the adhesive labels (2, 3).

The pictograms on the adhesive labels regarding operation of the Joystick 4Plus show the respective functions that are activated by the individual operating devices of the Joystick 4Plus.

The following applies:

– Move the Joystick 4Plus (1) in the direction of the arrow (A) or (B).

The attachment moves accordingly in the directions (A) or (B) as shown in the pictogram.

– Move the slider (4) in the direction of the arrow (C) or (D).

The attachment moves accordingly in the directions (C) or (D) as shown in the pictogram.

Pictogram	Attachment function
	Move the side shift frame or fork forwards
	Move the side shift frame or fork backwards
	Move the sideshift to the left
	Move sideshift to the right
	Adjust fork arms: open
	Adjust fork arms: close
	Release load retainer
	Clamp load retainer
	Open clamps
	Close clamps

Picto-gram	Attachment function
	Rotate to the left
	Rotate to the right
	Tip shovel over
	Tip shovel back

NOTE

The pictograms are affixed according to the attachment fitted at the factory. If an attachment with different functions is fitted, the authorised service centre must check that the pictograms bear the correct representation and must change them if necessary.

Clamp locking mechanism

▷

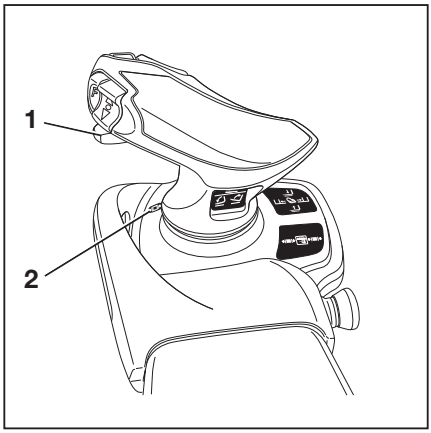

– To release the clamp locking mechanism, push the slider (1) to the left.

The clamp locking mechanism is released. The LED for the "clamp release" (2) lights up and remains lit while the clamp locking mechanism is released.

– To open the clamp, push the slider (1) to the left again.

NOTE

The hydraulic function for opening the clamp is available for one second after the clamp locking mechanism is released. After one second, the clamp locking mechanism is automatically reactivated.

It is not necessary to release the clamp locking mechanism in order to close the clamp.

– To close the clamp, push the slider (1) to the right again.

Controlling attachments using the Joystick 4Plus and the 5th function

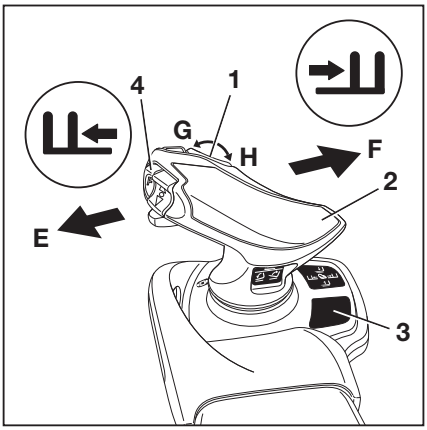

NOTE

For technical reasons, clamping attachments ***must not*** *be controlled via the 5th function.*

Use shift key "F" (4) and the Joystick 4Plus (2) and the horizontal rocker button (1) to control the "5th function".

The adhesive label bearing the pictograms for the hydraulic functions (3) for the Joystick 4Plus (2) and for the horizontal rocker button (1) is affixed at the designated point.

– If the adhesive label becomes illegible or is missing, please contact your authorised service centre.

The pictograms on the adhesive label regarding operation of the Joystick 4Plus show the respective functions that are activated by the individual operating devices of the Joystick 4Plus.

– Note the following attachment functions and pictograms.

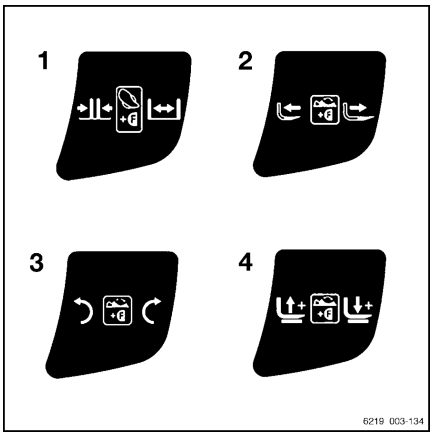

	Operating device	Function of the attachment
1	Shift key "F" and Joystick 4Plus	Adjust fork arms: close/open
2	Shift key "F" and horizontal rocker button	Adjust fork: backwards/forwards
3	Shift key "F" and horizontal rocker button	Swivel lift mast or fork: left/right
4	Shift key "F" and horizontal rocker button	Additional fork carriage: lift/lower

The following applies:

– Press and hold shift key "F" (4).

– Move the Joystick 4Plus (2) in the direction (E) or (F).

The attachment moves accordingly in the directions (E) or (F) as shown in the pictogram.

– Push the horizontal rocker button (1) in the direction (G) or (H).

The attachment moves accordingly in the directions (G) or (H) as shown in the pictogram.

– Release shift key "F" (4).

NOTE

The pictograms are affixed according to the attachment fitted at the factory. If an attachment with different functions is fitted, the authorised service centre must check that the pictograms bear the correct representation and must change them if necessary.

Controlling attachments using the Fingertip

In this version, the attachments (variant) are controlled using the operating levers (1) and (2). The adhesive label bearing the pictograms for the hydraulic functions (3) for the operating lever (2) and the adhesive label (4) for the operating lever (1) are affixed at the designated points.

– If the adhesive labels become illegible or are missing, please contact your authorised service centre.

– Observe the pictograms for the attachment functions on the adhesive labels (3, 4).

The pictograms on the operating levers show the respective functions that are activated by these levers.

The following applies:

– Move the operating lever (1) in the direction of the arrow (A) or (B).

The attachment moves accordingly in the directions (A) or (B) as shown in the pictogram.

– Move the operating lever (2) in the direction of the arrow (C) or (D).

The attachment moves accordingly in the directions (C) or (D) as shown in the pictogram.

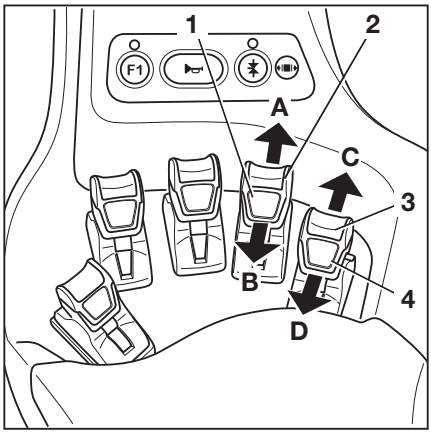

Picto-gram	Attachment function
	Move the side shift frame or fork forwards
	Move the side shift frame or fork backwards
	Move the sideshift to the left
	Move sideshift to the right
	Adjust fork arms: open
	Adjust fork arms: close
	Release load retainer
	Clamp load retainer
	Open clamps
	Close clamps
	Rotate to the left
	Rotate to the right
	Tip shovel over
	Tip shovel back

NOTE

The pictograms are affixed according to the attachment fitted at the factory. If an attachment with different functions is fitted, the authorised service centre must check that the pictograms bear the correct representation and must change them if necessary.

Clamp locking mechanism

▷

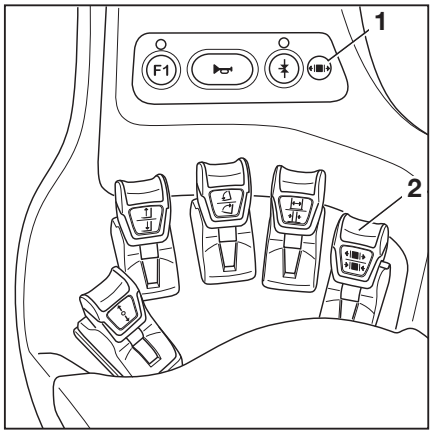

– To release the clamp locking mechanism, push the operating lever (2) forwards.

The clamp locking mechanism is released. The LED for the "clamp release" (1) lights up and remains lit while the clamp locking mechanism is released.

NOTE

The hydraulic function for opening the clamp is available for one second after the clamp locking mechanism is released. After one second, the clamp locking mechanism is automatically reactivated.

– To open the clamp, push the operating lever (2) forwards again.

It is not necessary to release the clamp locking mechanism in order to close the clamp.

– To close the clamp, pull the operating lever (2) backwards.

Controlling attachments using the Fingertip and the 5th function

▷

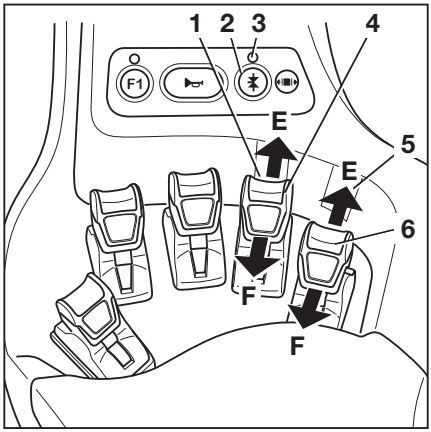

NOTE

For technical reasons, clamping attachments ***must not*** *be controlled via the 5th function.*

The function key for the "5th function" (2) and the operating levers (1, 6) are used to control the "5th function".

The pictograms (1, 5) behind the operating levers show the functions that are activated by the respective levers.

– If the adhesive labels become illegible or are missing, please contact your authorised service centre.

The following applies:

– Actuate the function key for the "5th function" (2).

The LED for the "5th function" (3) lights up.

– Move the operating lever (4) or (6) in the direction of the arrow (E) or (F).

The attachment moves accordingly in the directions (E) or (F) as shown in the pictogram.

NOTE

The place where the adhesive label bearing the pictograms (1) or (5) is affixed shows which operating lever is intended to operate the "5th function". The pictograms show the functions that are activated by switching with the function key (2).

Pictogram	Attachment function
	Auxiliary hydraulics "5th function"
	Move the sideshift to the left

Picto-gram	Attachment function
	Move sideshift to the right
	Adjust fork arms: open
	Adjust fork arms: close
	Rotate to the left
	Rotate to the right

NOTE

The pictograms are affixed according to the attachment fitted at the factory. If an attachment with different functions is fitted, the authorised service centre must check that the pictograms bear the correct representation and must change them if necessary.

Clamp locking mechanism (variant)

This truck can be fitted with a clamp locking mechanism for clamping attachments. The clamp locking mechanism prevents the clamp from opening unintentionally if the operating function is inadvertently triggered.

DANGER

If the correct function of the clamp locking mechanism is not guaranteed, there is a risk to life from a falling load!

If other attachments in addition to the clamp are used on this truck, the clamp locking mechanism must be reassigned to the corresponding operating device every time the clamp is reassembled.

- Make sure that the authorised service centre reassigns the function of the clamp locking mechanism to the corresponding operating device.
- Make sure that the additional clamp locking mechanism function is available.
- Observe the section entitled "Fitting attachments".

NOTE

*For technical reasons, clamping attachments **must not** be controlled via the "5th function".*

The sections entitled "Controlling attachments using ..." describe how the clamp locking mechanism is operated.

– See the section concerning the relevant operating device.

Picking up a load using attachments

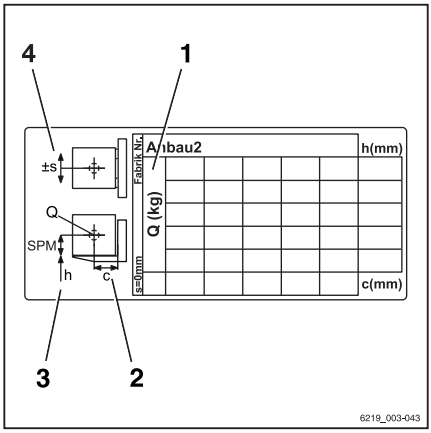

WARNING

Risk of accident!

Attachments must only be deployed for their intended use as described in the relevant operating instructions.

Drivers must be taught how to operate the attachments.

WARNING

Risk of accident!

Loads may only be picked up and transported with attachments if the loads are securely grasped and attached. If necessary, the loads must also be secured against slipping, rolling, falling over, swinging and tipping over. If the load centre of gravity is shifted, the stability changes.

– Observe stability when shifting the load centre of gravity.
– Check the capacity rating plates for the attachments or combination of attachments.

– Read the permissible values on the capacity rating plate.

1 Load capacity "Q" (kg)
2 Load distance "C" (mm)
3 Lift height "h" (mm)
4 Permissible sideshift "s" (mm)

Auxiliary equipment

Operating the windscreen wiper/washer

– Press the button (1) to activate the front wiper/washer (variant) and the roof panel wiper (variant).

– Push button (2) to actuate the rear windscreen wiper/washer (variant).

Repeated pressing of the respective button switches between the operating stages in the sequence shown below.

Button actuation	Operating stage
	Off
1st time	On
2nd time	Interval
3rd time + hold	Washer
4th time	Off

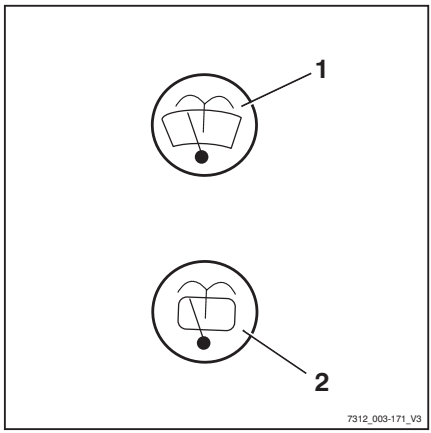

Filling the washer system

⚠ CAUTION

Components may become damaged due to the effects of frost!

Water expands when it freezes. If there is no anti-freeze in the washer system, the system may be damaged due to the build up of ice in freezing conditions.

– Always use washer fluid containing anti-freeze.

The windscreen washer reservoir is under the compartment behind the driver's seat. The sight glass (1) displays the fill level.

– Open filler cap (2) for the windscreen washer reservoir. ▷
– Fill the windscreen washer reservoir with washer fluid and anti-freeze in accordance with the maintenance data table; see ⇒ Chapter "Maintenance data table", Page 322 .
– Close lid.
– Operate washer system until washer fluid is discharged from the spray nozzles.

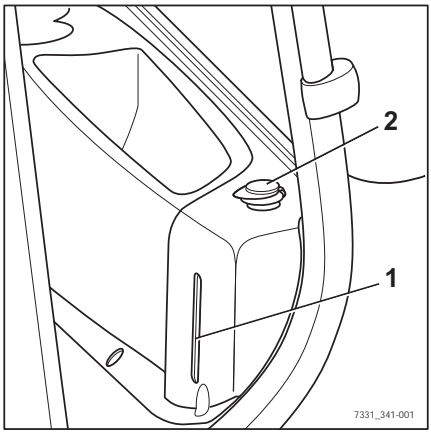

FleetManager (variant)

FleetManager is an equipment variant and can be fitted to the truck in different versions. The description and operation information can be found in the separate operating instructions for the corresponding FleetManager versions.

Shock recognition (variant)

The shock recognition is an equipment variant of the FleetManager (variant) in which an acceleration sensor is installed in the truck. The acceleration sensor records data arising from rapid accelerations or decelerations of the truck, e.g. in the event of an accident. This data can be electronically read out and evaluated.

– If you have any questions, please contact your authorised service centre.

Cruise control (variant)

Using the cruise control function, the driver can save the speed in forwards travel when it is > 6.0 km/h by pressing a button, and continue driving without actuating the accelerator pedal.

NOTE

The cruise control function cannot be used for reverse travel or when travelling at speeds below 6.0 km/h.

Depending on the truck equipment, the cruise control can be switched on and off via the drive direction switch or the display and operating unit.

Switching on and off via the drive direction switch (1). ▷

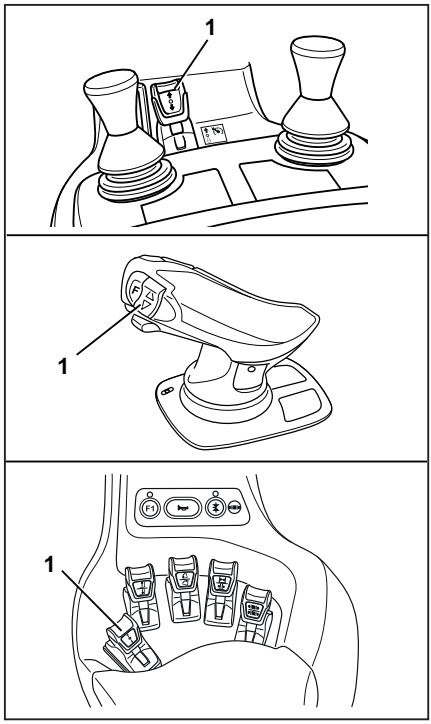

Switching on and off using the Softkeys on the display-operating unit. ▷

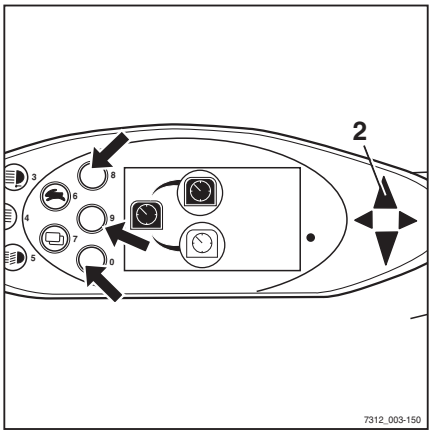

Switching on cruise control

⚠ WARNING

Risk of accident from failing to adjust speed!

Driving at excessive speeds can cause accidents, e.g. the truck could tip over when cornering.

- Adjust speed along the entire distance being travelled
- Pay particular attention to cornering speed
- Observe safety regulations when driving
- Observe the special behaviour of the cruise control function and the dangers associated with it

- Start drive mode.
- Accelerate the truck to the required speed (at least 6.0 km/h)
- Press the drive direction switch (1) for forward travel again for at least one second, or press the corresponding Softkey on the display-operating unit. ▷

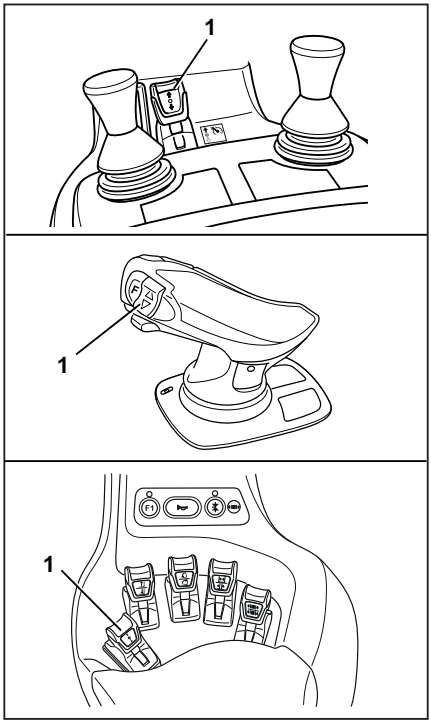

The current speed is saved. The forward travel indicator (2) flashes. ▷

Cruise control is switched on. The symbol is displayed.

– Remove your foot from the accelerator pedal.

The truck continues to drive at the selected speed until the cruise control function is switched off again.

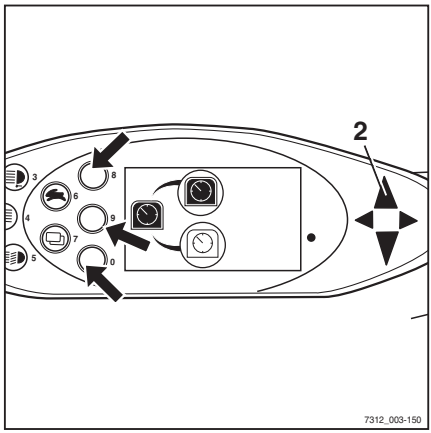

Switching off cruise control ▷

The cruise control function is switched off by means of one of the following actions:

- Actuate the foot brake
- Actuate the parking brake
- Actuate the accelerator pedal
- Move the drive direction switch (1) into the neutral position or reverse
- Actuate the corresponding Softkey (see arrows, previous picture) on the display-operating unit.

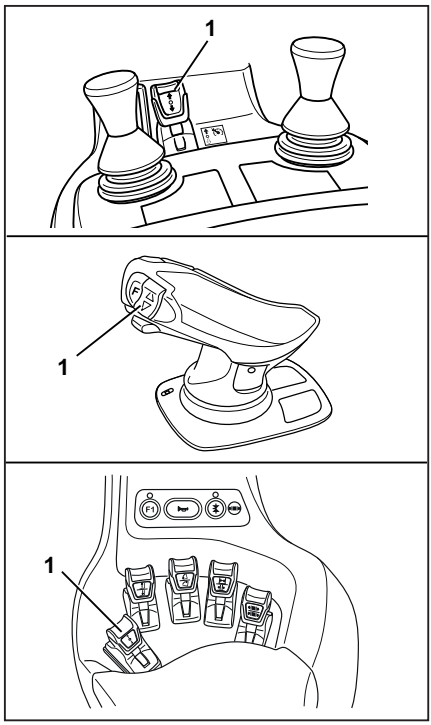

NOTE

If the seat switch is not actuated, the truck's cruise control function and drive function are switched off.

The accelerator pedal can be used to switch off the cruise control function, depending on which function type is programmed:

- Type 1:
  Even slightly depressing the accelerator pedal switches off the cruise control function
- Type 2:
  To switch off the cruise control function, the accelerator pedal must be depressed at least as far as it was when saving the speed

– Switch off cruise control

The forward travel indicator (2) illuminates. ▷

Cruise control is switched off. The symbol is displayed.

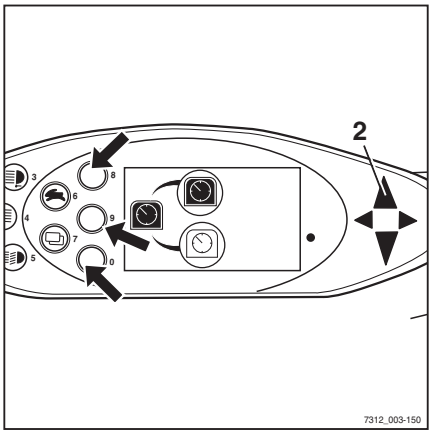

NOTE

If the truck is configured with automatic functions that reduce the driving speed to 6 km/h or less in certain situations, then these functions will also switch the cruise control off automatically.

Driver restraint systems (variants)

Different driver restraint systems are available as variants for this truck. The description and operation for these systems can be found in the separate "Driver restraint systems" operating instructions.

Ceiling sensor (variant)

Description

The ceiling sensor (1) on the overhead guard is an assistance system that automatically reduces the driving speed of the truck within halls. However, this assistance system does not release the driver from the responsibility of observing the speed limits on company premises. ▷

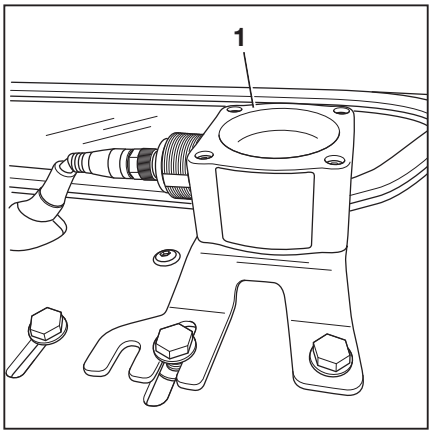

Depending on the system setting, the ceiling sensor can detect overhead structures above the truck at a height of 2 m to 24 m above the sensor.

If the truck is equipped with a ceiling sensor, this assistance system is listed in the "Assistance systems" menu in the display-operating unit.

Operating the ceiling sensor system

The drivers must be instructed on the use of the ceiling sensor system by the operating company.

When the driver enters a hall for the first time after starting work, they must be certain that the ceiling sensor system is working correctly. Despite the ceiling sensor system being installed, the driver must also check the speed indicator on the display-operating unit on a regular basis to ensure that they do not exceed the maximum speed permitted for the environment.

- **Entering a hall**
  The ceiling sensor system automatically detects when the truck enters a hall. The system then automatically slows the truck to the maximum speed that is set for the hall. The "Speed restriction" symbol appears in the display.
- **Leaving a hall**
  If the truck leaves the hall again, the ceiling sensor system enables the maximum speed set for areas outside the hall. Due to the range of the sensor, this may not happen until the truck is a few metres away from the hall exit. Before the truck is able to accelerate to the maximum speed permitted for outdoor areas, the speed limitation must still be unlocked. To do this, release the accelerator briefly and then operate the accelerator again.
- **Switching on the truck in a hall**
  If the truck is switched on inside a hall, the ceiling sensor system detects the hall ceiling and reduces the driving speed to the maximum speed that is set for halls.

Possible limitations for object recognition

- If the truck moves under larger overhead structures outdoors, e.g. a pedestrian bridge, the ceiling sensor system may interpret this overhead structure to be a hall ceiling and reduce the maximum speed.
- In rare cases, it may occur that the ceiling sensor system does not recognize a ceiling and does not then reduce the speed. This can happen if the signals from the ceiling sensor are insufficiently reflected due to the

ceiling geometry; for example, if there are large window areas at a 45° angle.

In these cases, the sensitivity and the range of the ceiling sensor system must be adjusted. See the following section.

Changing the sensor settings

NOTE

The ceiling sensor system is supplied by STILL with the following factory settings:

- *Sensitivity: High*
- *Ceiling height: 24 m*

– Park the truck securely and switch it off.

– Turn the union nut (4) anti-clockwise to loosen it. Disconnect the electrical connection assembly by pulling out the plug.

– On the underside of the assembly baseplate on the overhead guard, hold four nuts (3) in place.

– Unscrew four socket head screws (2).

▷

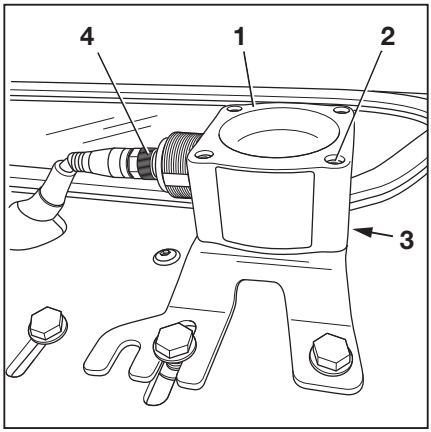

The key (5) is secured with a nut under the assembly baseplate.

– Carefully remove the ceiling sensor (1).

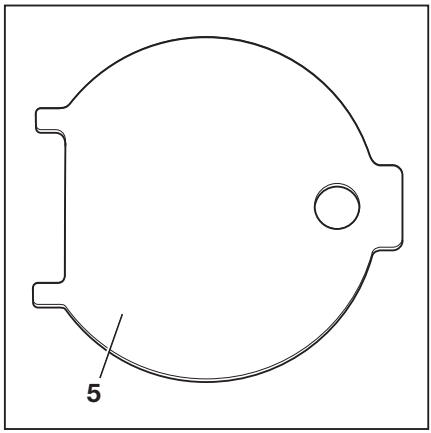

The sensor is adjusted using DIP switches (6).

– To access the DIP switches, open the cover on the underside of the sensor housing with the key (5).

During this process, the two tabs of the key (5) fit into the recesses of the cover.

– Using the DIP switches "1 to 5" (6), adjust the range and the sensitivity of the sensor. The DIP switches can be adjusted using a small screwdriver.

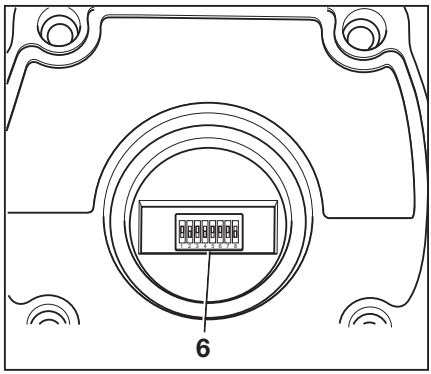

⚠ CAUTION

The settings for DIP switches "6 to 8" are the factory settings of the manufacturer.

Do **not** change the factory settings of the manufacturer!

Factory settings of the manufacturer

DIP switch		
6	7	8
1	1	0

The possible settings for DIP switches "1 to 5" are shown in the following tables:

DIP switch			
1	2	3	Range
0	0	0	2 m
0	0	1	3 m
0	1	0	4 m
0	1	1	6 m
1	0	0	8 m
1	0	1	12 m
1	1	0	16 m
1	1	1	24 m

4	5	Sensitivity
0	0	Very high
0	1	High
1	0	Medium
1	1	Low

Representation of the beam angle depending on the sensitivity of the sensor that has been set, from (1) "low" to (4) "very high". ▷

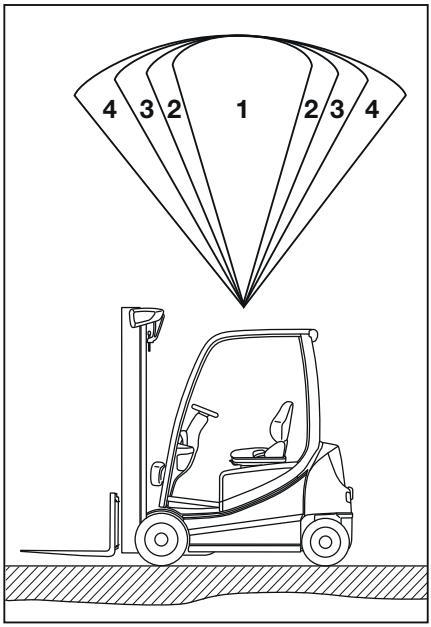

The sensor has different beam angles depending on the combination of range and sensitivity that has been set. See the following table:

Sensitivity	Range	Beam angle
Low (1)	2 m	22.5°
	4 m	22.5°
	8 m	20°
	16 m	15°
	24 m	5°
Medium (2)	2 m	35°
	4 m	30°
	8 m	25°
	16 m	22.5°
	24 m	10°

Sensitivity	Range	Beam angle
High (3)	2 m	42°
	4 m	33°
	8 m	22.5°
	16 m	20°
	24 m	15°
Very high (4)	2 m	45°
	4 m	43°
	8 m	30°
	16 m	22.5°
	24 m	18°

– After the adjustment, refit the cover.
– Refit the ceiling sensor and connect it.
– Check that it is working correctly.

Cab

Opening the cab door

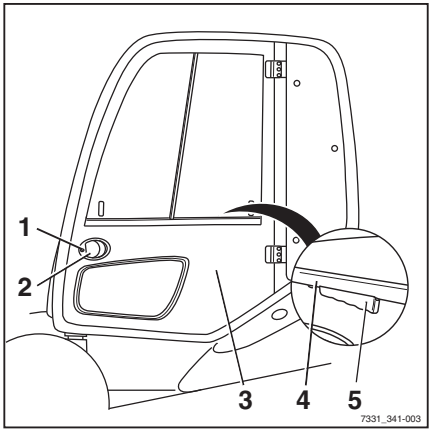

⚠ DANGER

There is a risk of damage caused by collision if the cab door opens while driving.

– The cab door must be latched securely in the engaged position.

Opening the cab door from the outside:

– Insert the key in the door lock (1), unlock and remove the key.

– Pull the door handle (2) and release the door lock.

– Open the cab door (3) by pulling outwards.

Opening the cab door from the inside:

– Take hold of the handlebar (4) and latch (5).

– Press the latch in and push the cab door outwards.

Closing the cab door

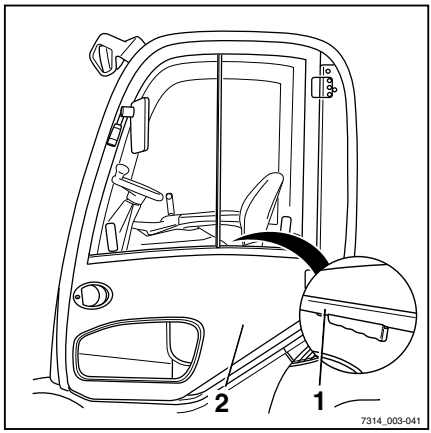

⚠ DANGER

There is risk of damage caused by collision if the cab door opens while driving.

– The cab door must be securely engaged in the detent position.

Closing the cab door from the outside:

– Push the cab door (2) inwards until the door lock engages.

– Make sure that the cab door is fully closed.

Closing the cab door from the inside:

– Take hold of the handlebar (1).

– Pull the cab door inwards until the door lock engages.

– Make sure that the cab door is fully closed.

Opening the side windows

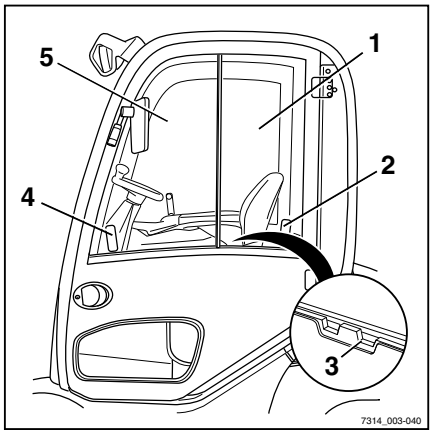

⚠ WARNING

There is risk of crushing between the window frame and side window caused by the side windows slipping inadvertently during travel.

– Make sure that the handle engages securely in the corresponding stop slot.

Opening the rear side window:

– Press the handle (2) together and slide the rear side window (1) forwards.

– Make sure that the handle engages in the stop slot (3).

Opening the front side window:

– Press the handle (4) together and slide the front side window (5) to the rear.

– Make sure that the handle engages in the stop slot (3).

Closing the side windows

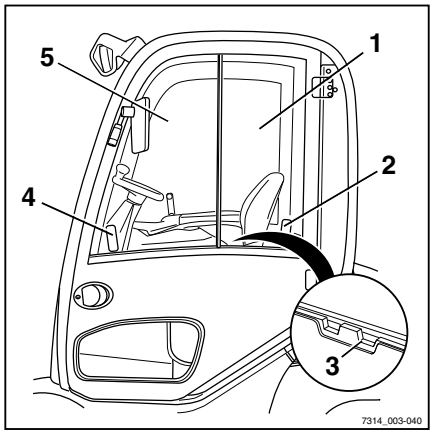

⚠ WARNING

There is risk of crushing between the window frame and side window caused by the side windows slipping inadvertently during travel.

– Make sure that the handle engages securely in the corresponding stop slot.

Closing the rear side window:

– Press the handle (2) together and pull the rear side window (1) to the rear.

– Make sure that the handle engages in the stop slot (3).

Closing the front side window:

– Press the handle (4) together and slide the front side window (5) forwards.

– Make sure that the handle engages in the stop slot (3).

Operating the interior lighting ▷

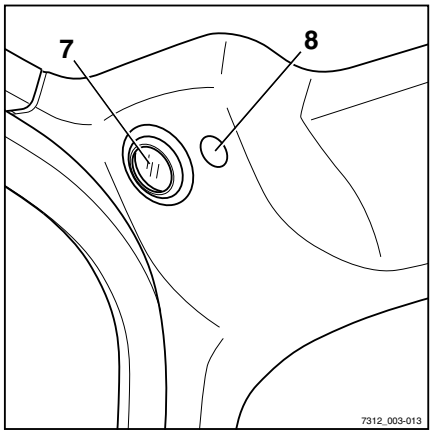

– Switch the interior lighting (7) on or off using the switch (8) or button (1). ▷

The "interior lighting" symbol (2) appears in the display.

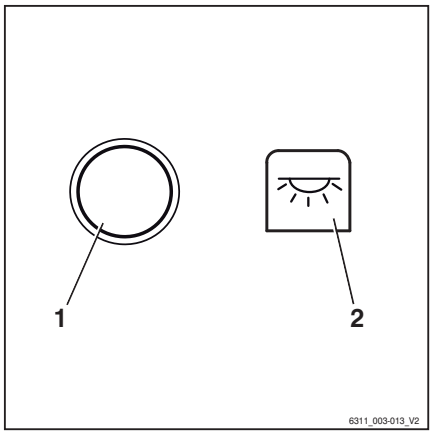

Operating the rear window heating

– Press Softkey (1) to switch on the rear window heating.

Rear window heating is switched on.
The symbol is displayed.

– Press Softkey (1) to switch off the rear window heating.

Rear window heating is switched off.
The (2) symbol is displayed.

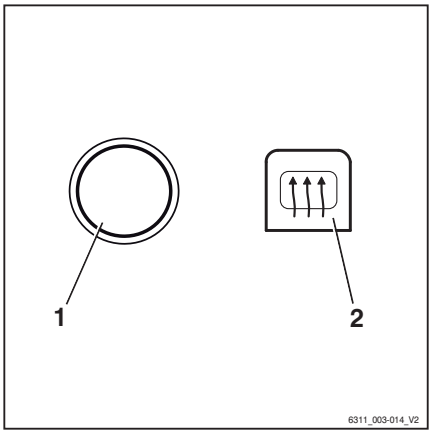

NOTE

Rear window heating will switch off automatically after approximately 10 minutes.

Radio (variant)

The radio (1) and the loudspeakers (2) are an equipment variant. If the truck is equipped with a radio and loudspeakers, they are integrated into the roof lining.

The description and operation can be found in the separate operating instructions for the radio.

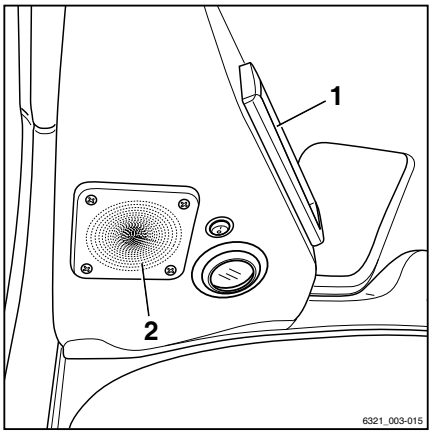

WARNING

The driver's attention is adversely affected by operating the radio or listening to excessive volume while driving or handling loads. There is a risk of accident!

– Do not use the radio when driving or when handling loads.
– Set the radio volume so that you can still hear warning signals.

Heating system (variant)

⚠ DANGER

Risk of explosion!

Do not expose spray cans or gas cartridges to the flow of hot air.

The heater should not be operated near storage rooms or similar facilities where fuel vapours or coal, wood or grain dust could accumulate.

Switching on the blower

– To switch on the blower, turn on the blower switch (1).

The blower runs at the speed level set at the switch.

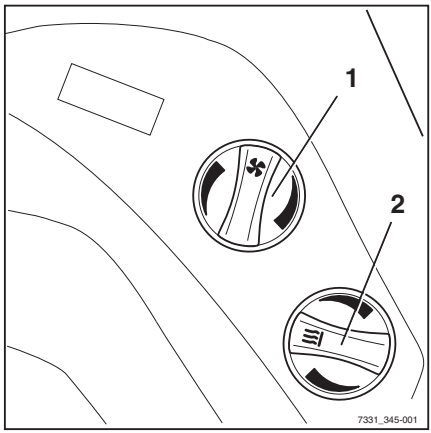

Switching on the heating system

⚠ DANGER

Risk of fire!

Do not cover the heater!

⚠ DANGER

Risk of burns!

Do not touch housing during operation!

NOTE

Only switch on the heating system when the blower is running.

– To switch on the heating system, turn on the heating switch (2).

The heating system is in operation. The air is heated up to the heater power set at the variable heating switch (2).

Adjusting the air flow

– Adjust air flow at the front outlet vents (3) and the outlet vent in the footwell (4).

▷

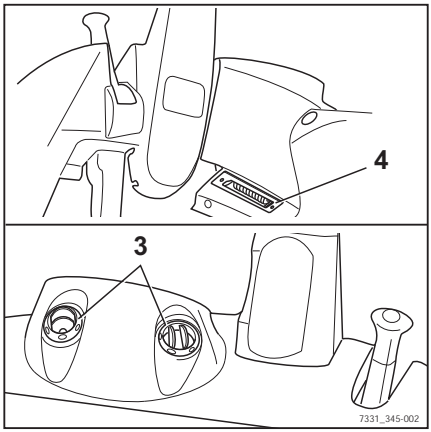

Air conditioning (variant)

Switching on the air conditioning

– Switch the blower switch (1) on.

– Set the cryostat (2) to the desired level.

– Switch on the air conditioning by pressing the switch (3).

▷

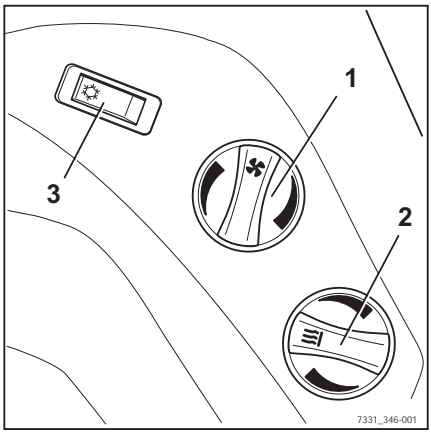

Switching off the air conditioning

– Switch off the air conditioning by pressing the switch (3).

– Switch off the blower switch (1).

Trailer operation

Towed load

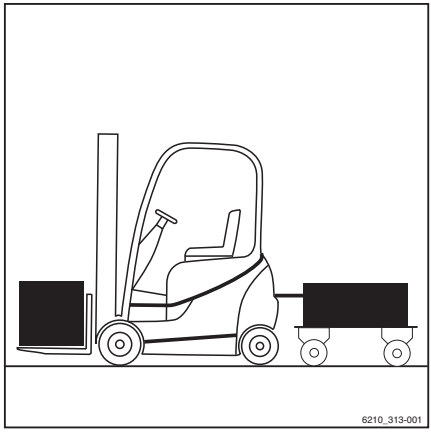

⚠ DANGER

There is an increased risk of accident when using a trailer.

Using a trailer changes the truck handling characteristics. When towing, operate the truck such that the trailer train can be safely driven and braked at all times. The maximum permissible speed when towing is 5 km/h.

- Do not exceed the permissible speed of 5 km/h.
- Do not couple the truck in front of rail vehicles.
- The truck must not be used to push any kind of trolley.
- It must be possible to drive and brake at all times.

⚠ CAUTION

Risk of damage to components!

The maximum towed load for occasional towing is the rated capacity specified on the nameplate. Overloading can lead to component damage on the truck. The sum of the actual towed load and the actual load on the fork must not exceed the rated capacity. If the existing towed load corresponds to the rated capacity of the truck, no load may be transported on the fork at the same time. The load can be distributed between the fork and the trailer.

- Check the load distribution and adjust it to correspond to the rated capacity.
- Observe the permissible rigidity value of the tow coupling.

⚠ CAUTION

Risk of damage to components!

The maximum towed load only applies when towing unbraked trailers on a level surface (maximum deviation +/- 1%) and on firm ground. The towed load must be reduced if towing on gradients. If necessary, notify the authorised service centre of the application conditions. The service centre will provide the required data.

- Inform the authorised service centre.

⚠ CAUTION

Risk of damage to components!

A support load is not permitted.

– Do not use trailers with tillers supported by the tow coupling.

This truck is suitable for the occasional towing of trailers. If the truck is equipped with a towing device, this occasional towing must not exceed 2% of the daily operating time. If the truck is to be used for towing on a more regular basis, the manufacturer should be consulted.

Coupling pin in the counterweight

Coupling the trailer

⚠ DANGER

If you briefly leave the truck to couple or uncouple, there is a risk to life caused by the truck rolling away and running you over.

– Apply the parking brake.
– Lower the fork to the ground.
– Turn off the key switch and remove the key.

– Take measures to prevent the trailer from rolling away, e.g. use wheel chocks (1). ▷

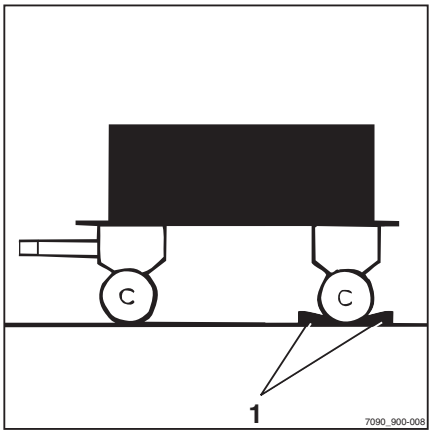

– Push the coupling pin (2) down, turn 90° and pull out.

– Adjust tiller height.

⚠ DANGER

Persons may become trapped between the truck and trailer.

When hooking up, ensure that no one is between the truck and trailer.

– Slowly move the truck back.

– By moving the truck back, introduce the tiller into the gap (3) of the counterweight.

⚠ DANGER

In the event of loss or destruction of the coupling pin or the securing bush during towing, the trailer works loose and becomes uncontrollable, meaning there is a risk of accident!

– Use only original coupling pins that have been checked for good condition.

– Ensure that the coupling pin is correctly inserted and secured.

– Insert the coupling pin into the counterweight, press downwards against the spring pressure and turn 90° (the coupling pin is locked in this position).

– Remove any items used to prevent the trailer from rolling away.

Uncoupling the trailer

– Take measures to prevent the trailer from rolling away, e.g. use wheel chocks.

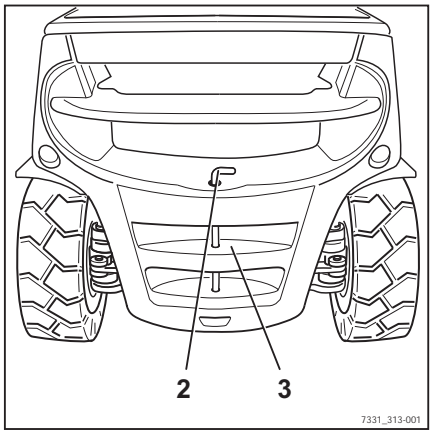

– Push the coupling pin (2) down, turn 90° and pull out.
– Slowly move the truck forwards and guide the tow-bar eye completely out of the counterweight.
– Insert the coupling pin into the counterweight, press downwards against the spring pressure and turn 90° (the coupling pin is locked in this position).

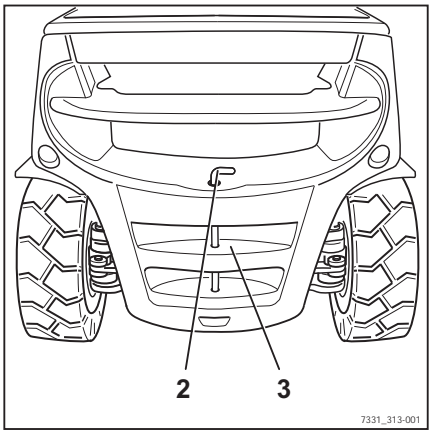

Automatic tow coupling

⚠ DANGER

People may be trapped between the truck and trailer.

When hooking up, ensure that no one is between the truck and trailer.

⚠ DANGER

Never jack up the truck on the tow coupling or use it for crane lifting. The tow coupling is not designed for this and could be deformed or damaged. This could cause the truck to fall, with potentially fatal consequences!

– Use the tow coupling only for towing.
– For jacking up and crane loading, use only the designated lifting points.

⚠ DANGER

The tow coupling is not designed to support loads and could become deformed or destroyed. This could cause the supported load to fall, with potentially fatal consequences!

– The tow coupling should be subjected only to horizontal loads, i.e. the tiller must be horizontal.

⚠ DANGER

If you briefly leave the truck to couple or uncouple the trailer, there is a risk to life caused by the truck rolling away and running you over.

– Apply the parking brake.
– Lower the forks to the ground.
– Switch off the key switch and remove the key.

⚠ WARNING

Never reach between the coupling pins and the towing jaws. If the component moves suddenly there is a risk of injury!

– To release the coupling pin, actuate the corresponding lever or use a suitable device (e.g. assembly lever).
– When not in use, close the automatic tow coupling.

⚠ WARNING

Risk of damage due to component collision.

A truck with tow coupling needs more room for manoeuvring due to its overhang. The tow coupling can damage the racking or the tow coupling itself when manoeuvring. If there is a collision with the tow coupling, test the tow coupling for damage such as cracks. A damaged tow coupling must not be used again.

– Always manoeuvre carefully and with sufficient room.
– In the case of a collision, test the tow coupling for damage.
– Replace tow coupling if damaged, if necessary contact the authorised service centre.

⚠ WARNING

Risk of damage to the tow bar eye or tiller!

Due to the truck's rear wheel steering, the side slewing angle of the tiller may not be adequate. The coupling or the tiller may be damaged! The tow bar eye of the tiller must fit the tow coupling in terms of shape and size.

– Ensure that the tow bar eye and tiller fit correctly.
– Avoid sharp cornering.
– Exercise care when travelling and manoeuvring in reverse.

⚠ WARNING

Risk of component damage if the tiller in the tow coupling is tilted!

The tiller should be kept as horizontal as possible when towing. This ensures that the rotation range is sufficient at the top and bottom. The authorised service centre can adjust the assembly height for the tow coupling to the tiller height if necessary.

– Make sure that the tiller is level.
– To change the coupling height, contact the authorised service centre.

Coupling model RO*243

NOTE

Tow coupling RO 243 is intended for a tow-bar eye in accordance with DIN 74054 (bore diameter: 40 mm).

– Take measures to prevent the trailer from rolling away, e.g. use wheel chocks (1).
– Adjust the tow bar eye of the tiller so that it is at the centre of the towing jaws.

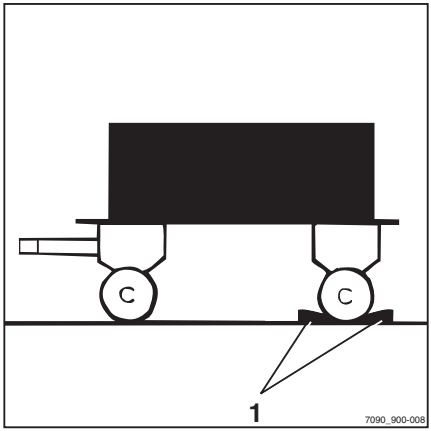

– Pull out the safety handle (3).
– Push the hand lever (2) upwards.

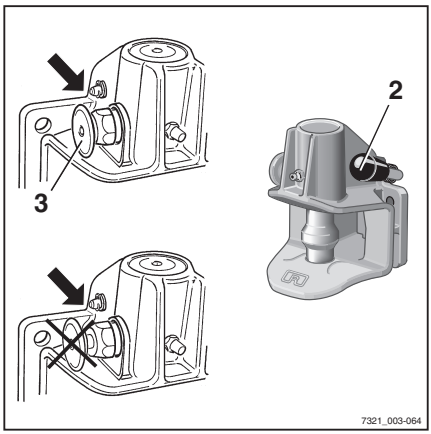

⚠ DANGER

Persons may become trapped between the truck and trailer.

When hooking up, ensure that no one is between the truck and trailer.

⚠ CAUTION

When being coupled, the tow-bar eye must engage in the middle of the coupling jaw. Failure to follow these instructions could result in damage to the coupling jaw or to the tow-bar eye!

– Ensure that the tow-bar eye enters the coupling jaw centrally.

– Slowly move the truck back.

⚠ DANGER

If the coupling pin drops out during towing, the trailer will work loose and can no longer be controlled. There is a risk of accident!

A protruding safety handle means that the tow bar eye has not been coupled correctly. The trailer must not be towed in this condition.

- Ensure that the safety handle is flush with the securing bush.
- If the safety handle protrudes, repeat the coupling process.

- Remove any items used to prevent the trailer from rolling away.
- Tow the trailer.

Closing model RO*243 by hand

⚠ DANGER

Risk of injury from hand becoming trapped!

Do not reach into the coupling pin area. If, for example, a tow rope is to be secured in the tow coupling, use only a suitable device to close the tow coupling (e.g. assembly lever).

- Use a suitable device (e.g. assembly lever) to push the coupling pin up.

The coupling pin is released from the latch and the tow coupling then closes automatically.

Uncoupling model RO*243

- Take measures to prevent the trailer from rolling away, e.g. use wheel chocks.
- Pull out the safety handle (3).
- Push the hand lever (2) upwards.
- Slowly drive the truck forwards until the tow-bar eye and towing jaws are disconnected.
- Close the tow coupling by hand.

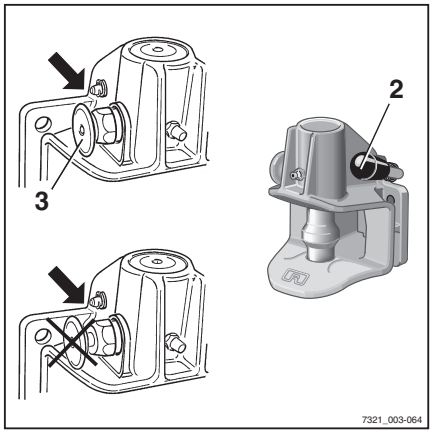

Coupling model RO*244 A

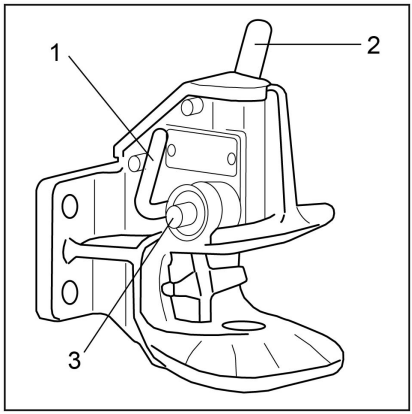

NOTE

Trailer coupling RO 244 is intended for a tow bar eye in accordance with DIN 74054 (bore diameter 40 mm) or DIN 8454 (bore diameter 35 mm).

– Take measures to prevent the trailer from rolling away, e.g. use wheel chocks.

– Adjust the tow bar eye of the tiller so that it is at the centre of the towing jaws.

– Push the hand lever (2) upwards until it snaps into place.

The tow coupling is opened.

DANGER

People can become trapped between the truck and trailer!

When hooking up, ensure that no one is between the truck and trailer.

CAUTION

When being coupled, the tow-bar eye must engage in the middle of the coupling jaw. Failure to follow these instructions could result in damage to the coupling jaw or to the tow-bar eye!

– Ensure that the tow-bar eye enters the coupling jaw centrally.

– Move the truck back slowly until the tow bar eye is inserted centrally into the coupling jaw of the tow coupling and the coupling pin engages.

NOTE

The coupling pin is correctly engaged if the control pin (3) does not protrude out of its guide.

⚠ DANGER

If the coupling pin drops out during towing, the trailer will work loose and can no longer be controlled. There is a risk of accident!

The control pin (3) must not protrude out of its guide.

– Ensure that the coupling pin is engaged correctly.

If the coupling pin is not correctly engaged:

– Remove any items used to prevent the trailer from rolling away.

– Move the truck with the trailer forwards approx. 1 m and then move it back slightly.

– On the coupling pin, check again that the control pin does not protrude out of its guide.

– Remove any items used to prevent the trailer from rolling away.

– Tow the trailer.

Closing model RO*244 A by hand

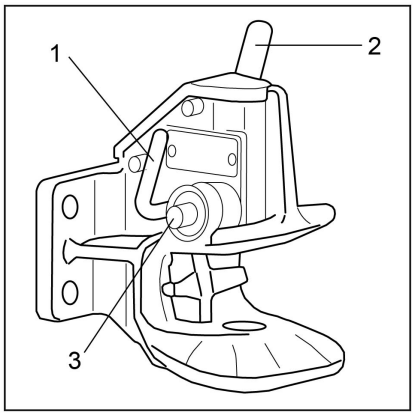

⚠ DANGER

Risk of injury from hand becoming trapped!

Do not reach into the coupling pin area. If, for example, a tow rope is to be secured in the tow coupling, only actuate the tow coupling via the closing lever (1).

– Press the closing lever (1) downwards as far as it will go.

The tow coupling is closed.

Uncoupling model RO*244 A

– Take measures to prevent the trailer from rolling away, e.g. use wheel chocks.

– Push the hand lever (2) upwards until it snaps into place.

The tow coupling is opened.

– Slowly drive the truck forwards until the towbar eye and towing jaws are disconnected.

– Close the tow coupling by actuating the closing lever (1).

NOTE

To protect the lower coupling pin bush against contamination, always keep the tow coupling closed.

Coupling model RO*245

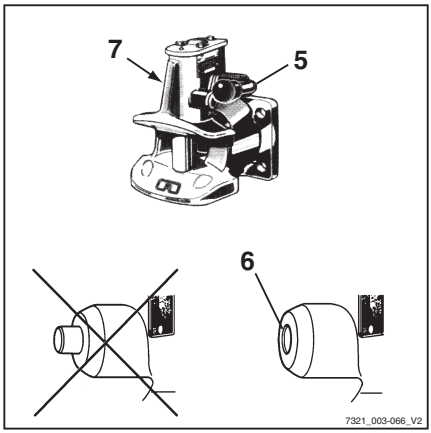

NOTE

Trailer coupling RO 245 is intended for a tow-bar eye in accordance with DIN 74054 (bore diameter 40 mm) or DIN 8454 (bore diameter 35 mm).

– Take measures to prevent the trailer from rolling away, e.g. use wheel chocks.

– Adjust the tow bar eye of the tiller so that it is at the centre of the towing jaws.

– Push the hand lever (5) upwards.

– The tow coupling is opened.

DANGER

People can become trapped between the truck and trailer!

When hooking up, ensure that no one is between the truck and trailer.

– Slowly move the truck back.

DANGER

If the coupling pin drops out during towing, the trailer will work loose and can no longer be controlled. There is a risk of accident!

A protruding safety handle means that the tow bar eye has not been coupled correctly. The trailer must not be towed in this condition.

– Make sure that the control pin does not protrude from the control bush.

– Repeat the coupling process if necessary.

– Remove any items used to prevent the trailer from rolling away.

– Tow the trailer.

Uncoupling model RO*245

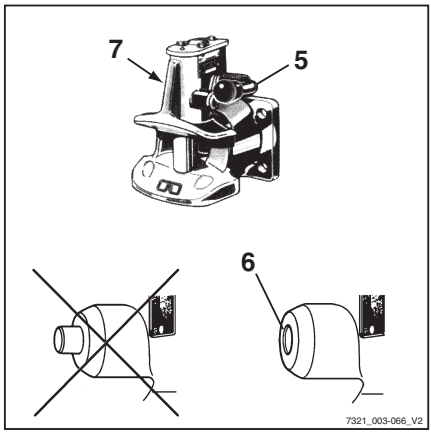

- Take measures to prevent the trailer from rolling away, e.g. use wheel chocks.
- Push the hand lever (5) upwards.
- Slowly drive the truck forwards until the tow-bar eye and towing jaws are disconnected.
- Push the closing lever (7) on the left side of the tow coupling down as far as it will go.

The tow coupling is closed.

Coupling model RO*841

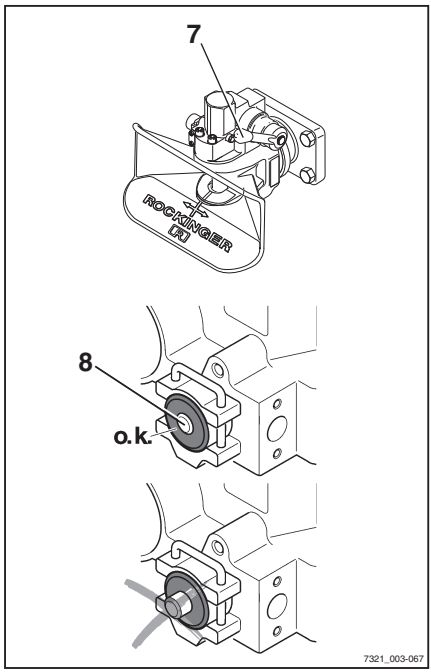

NOTE

Tow coupling RO 841 is intended for a tow-bar eye in accordance with DIN 74054 (bore diameter 40 mm).

- Take measures to prevent the trailer from rolling away, e.g. use wheel chocks.
- Push the hand lever (7) upwards until it snaps into place.

DANGER

People may be trapped between truck and trailer.

When hooking up, ensure that no one is between the truck and trailer.

CAUTION

When being coupled, the tow-bar eye must engage in the middle of the coupling jaw. Failure to follow these instructions could result in damage to the coupling jaw or to the tow-bar eye!

- Ensure that the tow-bar eye enters the coupling jaw centrally.

- Slowly move the truck back.

⚠ DANGER

If the coupling pin drops out during towing, the trailer will work loose and can no longer be controlled. There is a risk of accident!

A protruding safety handle means that the tow bar eye has not been coupled correctly. The trailer must not be towed in this condition.

- Make sure that the control pin does not protrude from the control bush.
- Repeat the coupling process if necessary.

- Remove any items used to prevent the trailer from rolling away.
- Tow the trailer.

Uncoupling model RO*841

- Take measures to prevent the trailer from rolling away, e.g. use wheel chocks.
- Push the hand lever (7) upwards.
- Slowly drive the truck forwards until the tow-bar eye and towing jaws are disconnected.
- Close the tow coupling.

Towing trailers

- Drivers who are towing a trailer for the first time must practise driving with a trailer in a suitable area.
- When passing through narrow road areas (entrances, gates etc.), observe the dimensions of the trailer and load.
- When towing multiple trailers, ensure a sufficient minimum distance to fixed installations when turning and cornering.

The permissible length of the trailer trains depends on the roadways to be driven and may need to be determined during the test drive.

It is the responsibility of the operating company to instruct the drivers regarding the permissible number of trailers and, where required, any additional speed reductions on individual sections of the route.

▷

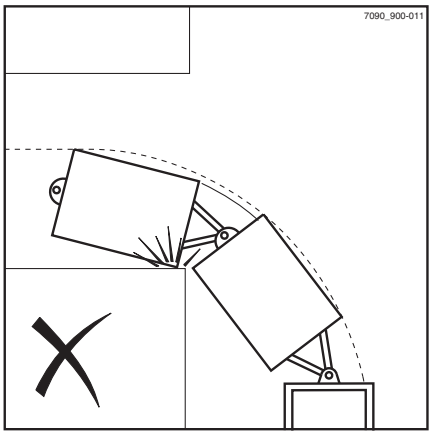

NOTE

Please observe the definition of the following responsible persons: "operating company" and "driver".

Display messages

Display content

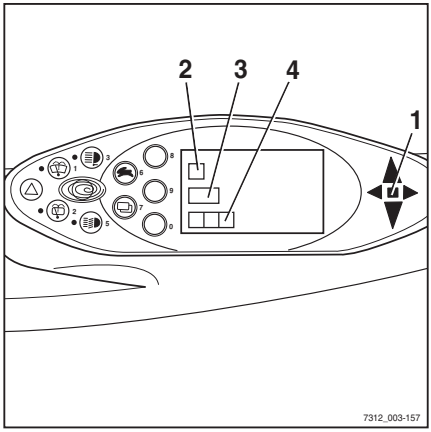

On the display of the display-operating unit, event-related messages may appear due to certain truck conditions.

The following types of message may appear individually or in combination:

- A graphic symbol (2)
- The message (3)
- An error code (4) consisting of a letter and a four-digit number

NOTE

Each time a message appears, the "Malfunction" display (1) also lights up.

Messages are always shown repeatedly and for a certain period of time, according to the event.

In the case of successive events, the respective messages are displayed one after another on the display.

After a few seconds, the display will alternate between the last shown operating display and the message.

The frequency of alternation depends on the type of event.

– If a message appears, follow these operating instructions.

Once the event is remedied, the message will disappear.

If a malfunction continues to occur, the message will continue to appear.

– Park the truck safely.

– Inform the authorised service centre.

Error code table

The table gives an overview of possible displays. In the "Comment" column you will find information on how to proceed should any of these messages be displayed.

Message text/ Error code	Comment
OVERHEATING A5022	Traction motor(s) is/are too hot. 1st phase: regulation of acceleration and speed. 2nd phase: limitation of phase current in converter (emergency driving function is retained). The error automatically disappears as soon as the temperature is below the limit. If the error occurs frequently, notify your authorised service centre.
ACCELERATOR A3002 A3003 A3004 A3005 A3006 A3007 A3505	Sensor fault, truck cannot be driven. Notify your authorised service centre.
ACCELERATOR A3008	Accelerator voltages (for dual pedal) do not match; truck cannot be driven. Notify your authorised service centre.
ACCELERATOR A3811	Accelerator configuration is invalid; truck cannot be driven. Notify your authorised service centre.
BRAKE SENSOR A3016 A3017	Sensor fault; truck can only be driven at emergency mode speed. Notify your authorised service centre.
BRAKE SENSOR A3035	Brake fluid level too low or switch defective; truck can only be driven at the emergency mode speed. Notify your authorised service centre.
CONFIGURATION A2111	Parameterisation error or defective printed circuit board; drive unit and hydraulic drive not functioning. Notify your authorised service centre.
CONFIGURATION A3801	Parameterisation error; drive unit and hydraulic drive not functioning. Notify your authorised service centre.
CONFIGURATION A3812	Drive program parameters are outside the permitted range. The drive program parameters are limited internally. Notify your authorised service centre.

Message text/ Error code	Comment
SEAT SWITCH A3027	Seat switch has not been operated for approx. 8 hours. Truck can possibly still be driven at a reduced speed and with reduced lifting capacity. Stand up briefly and then sit down again. If this does not resolve the problem, contact your authorised service centre.
STEERING A3215	Sensor fault; truck moves at emergency mode speed. Notify your authorised service centre.
DRIVE DIRECTION A3020	Switch error; no or limited drive unit function. Notify your authorised service centre.
LIFTING A3102 A3103	Sensor fault; no or limited hydraulic drive function. Notify your authorised service centre.
TILTING A3107 A3108	Sensor fault; no or limited hydraulic drive function. Notify your authorised service centre.
AUX1 A3112 A3113	Sensor fault; no or limited hydraulic drive function. Notify your authorised service centre.
AUX2 A3117 A3118	Sensor fault; no or limited hydraulic drive function. Notify your authorised service centre.
VERTICAL MAST A3130 A3131 A3132	No hydraulic function. Turn off "vertical lift mast position". Notify your authorised service centre.
VERTICAL MAST ERROR A3135	No hydraulic function. Turn off "vertical lift mast position". Notify your authorised service centre.
SUPPLY A2242 A2257	Transmitter power supply short circuit. Truck cannot be driven. Notify your authorised service centre.
SURVEILLANCE A2801 A2802 A2808 A2809 A2810 A2815	Drive unit not functioning. Release accelerator pedal. If this error occurs sporadically, it can be tolerated. If the operational capacity is impaired, notify your authorised service centre.
SURVEILLANCE A2803 A2806	Drive direction is set to neutral. Reselect the drive direction. If this error occurs sporadically, it can be tolerated. If the operational capacity is impaired, notify your authorised service centre.

Message text/ Error code	Comment
SURVEILLANCE A2817	Truck is not ready for operation. Turn the key switch to the zero position and restart. If this error occurs sporadically, it can be tolerated. If the operational capacity is impaired, notify your authorised service centre.
DRIVE A5041	Temperature sensor fault Notify your authorised service centre.
OIL PRESSURE A5631	Engine faulty (no oil pressure) or sensor faulty. Engine is switched off for protection. Notify your authorised service centre.
COOLANT LEVEL A5611	Fan is not running. Cooling fluid level too low, check the cooling fluid level and top up the cooling fluid if necessary. If this does not resolve the problem, contact your authorised service centre.
AIR FILTER A5651	Depending on the design of the air filter, replace the filter insert or the filter cartridges. If this does not resolve the problem, contact your authorised service centre.
CONTROL UNIT A3305	CIO not functioning. Notify your authorised service centre.
EXHAUST GAS PURIFIER A5791	No regeneration and no intermediate glow. Notify your authorised service centre.
EXHAUST GAS PURIFIER A5792 A5793 A5794 A5796	Regeneration cannot be started. Notify your authorised service centre.
EXHAUST GAS PURIFIER A5795 A5797 A5798	Regeneration has been interrupted. Notify your authorised service centre.
ALTERNATOR A5811	Starter battery is not charged. Notify your authorised service centre.

General messages

NOTE

Some of the following messages are equipment-specific and may not appear on the display-operating unit of every truck. The following messages are therefore intended only as a reference.

SERVICE BRAKE message

If the message `SERVICE BRAKE` appears on the display, notify the authorised service centre.

– Park the truck securely for checking by the authorised service centre.

– If multi-disc brakes in the drive wheel units are blocked, tow the truck.

APPLY HANDBRAKE message

⚠ DANGER

Risk of fatal injury from being run over if the truck rolls away!

Parking the truck without the parking brake applied is dangerous and is not permitted.

– The truck must not be parked on a slope.

– Only leave the truck when the parking brake has been applied.

– In emergencies, secure the truck using wedges on the side facing downhill.

NOTE

The truck is equipped with a negative spring-operated brake. Switching off the truck will block the multi-disc brakes in the drive wheel units after a few minutes. However, the truck can still roll until the drive wheel units are blocked. For this reason, the parking brake must always be applied before you leave the truck!

If you park the truck without applying the parking brake and then vacate the driver's seat, the `APPLY HANDBRAKE` message will appear in the display (variant). An optional signal tone sounds.

– Apply the parking brake.

The `APPLY HANDBRAKE` message disappears.

If the truck moves even though the parking brake is applied:

– Drive the truck onto level ground and park it safely. Secure it with wedges if necessary.

– Notify the authorised service centre.

BRAKE SENSOR message

If the `BRAKE SENSOR` message appears in the display, the maximum driving speed will be reduced. The brake sensor in the brake pedal must be checked.

– Notify the authorised service centre.

CODE DENIED message

If the message `CODE DENIED` appears on the display, the driver PIN has been entered incorrectly three times. The input is then locked for five minutes before another attempt can be made.

– Enter the driver PIN again after five minutes.

ACCELERATOR message

If the `ACCELERATOR` message appears on the display, the truck will remain stationary. The accelerator must be checked.

– Notify the authorised service centre.

SWITCH OFF TRUCK? message

If the `SWITCH OFF THE TRUCK?` message appears on the display, the switching-off of the truck is verified.

– Press the corresponding softkey on the display-operating unit to switch off the truck or cancel the operation.

PARKING BRAKE ACTIVE message

If the electric parking brake is applied, the `PARKING BRAKE ACTIVE` message appears on the display for 5 seconds.

– Release the parking brake to enable driving mode.

RELEASE PARKING BRAKE message

If the message `RELEASE PARKING BRAKE` appears on the display, driving mode cannot be enabled until the parking brake has been released by pressing the button.

– Release the parking brake by pressing the button.

PARKING BRAKE: APPLY HAND-BRAKE! message

If the message `PARKING BRAKE: APPLY HANDBRAKE!` appears on the display, the electric parking brake is faulty.

– Release the parking brake by pressing the button.

LOWER FORKS message

⚠ DANGER

There is a risk of fatal injury from a falling load or parts of the truck being lowered!

Parking the truck with the load lifted is dangerous and is not permitted under any circumstances! The increased safety provided by this function must not be misused in order to take safety risks.

– Lower the load fully before leaving the truck.

The fork is not lowered.

If the fork is above the height sensor, the key switch is turned off and the seat vacated, the `LOWER FORKS` message appears in the display (variant). An optional signal tone sounds.

– Lower the fork to the ground.

The message `LOWER FORKS` disappears.

TILT LEVER, LOWER LEVER, AUXILIARY1 LEVER, AUXILIARY2 LEVER messages

If an operating device is operated continuously for a long period, the `TILT LEVER`, `LOWER LEVER`, `AUXILIARY1 LEVER` or `AUXILIARY2 LEVER` message appears. The message indicates the affected operating device. The message will disappear if the operating device is immediately released.

If operation of the operating device continues, the affected hydraulic function is disabled and another message with the error code A4601 …4604 appears for the affected operating device.

If the operating device is released at this point, the error message disappears and the hydraulic function is enabled again.

STEERING message

If the STEERING message appears in the display, the truck will only move at emergency mode speed. The steering angle sensor must be checked.

– Notify the authorised service centre.

TILTING SPEED message

If the message TILTING SPEED appears on the display after the welcome screen, the tilting speed of the lift mast on this truck is significantly higher than on previous trucks in this series.

EMERGENCY OFF SWITCH message

⚠ WARNING

No electric braking assistance is available when the emergency off switch is actuated!

Actuating the emergency off switch will disconnect the drives from the power supply.

– To brake, actuate the service brake.

The truck is equipped with an emergency off switch. When this switch is actuated, the driving functions and the functions of the working hydraulics are blocked.

The EMERGENCY OFF SWITCH message appears periodically when the following criteria are met:

- The key switch is set to stage "I"
- The emergency off switch is actuated
- An operating device is actuated

DRIVE DIRECTION EMERGENCY OPERATION message

If the message DRIVE DIRECTION EMERGENCY OPERATION appears, the drive direction switch on the hydraulics operating device or the drive direction selection lever on the travel direction selector and indicator module has failed.

Emergency driving is possible. Depending on whether the drive direction switch or the drive direction selection lever has failed, the other operating device can still be used.

– Set the drive direction selection lever that is still functioning on the travel direction selector and indicator module or the drive direction switch on the hydraulics operating device to the desired drive direction and hold it in place.
– Drive the truck to a safe area and park the truck safely.
– Notify the authorised service centre.

Message ? VERTICAL POSITION

If the message `? VERTICAL POSITION` appears on the display, the calibration of the "automatic mast vertical positioning" has been activated.

– Save the mast position or cancel the calibration.

REFERENCE CYCLE message

If the fork was lowered after the truck was switched off, the control electronics do not know the position of the fork when the truck is restarted. The truck will only travel at a reduced driving speed. Depending on the position of the fork, the message `REFERENCE CYCLE` (variant) may appear in the display. To align the position with the control electronics, the fork must be raised.

– Switch on the key switch.

The truck will only travel at a reduced driving speed. The message `REFERENCE CYCLE` may appear in the display.

– Raise the fork.

The message `REFERENCE CYCLE` goes out, or now appears in the display for the first time and then goes out.

– To drive again, lower the fork to a maximum of 300 mm above the ground.

The truck can now be driven again with no speed limitation.

SAFETY BELT message

⚠ DANGER

Risk of fatal injury in the event of falling from the truck if it tips over!

If the truck tips over, the driver is at risk of injury even if a restraint system is used. The risk of injury can be reduced by using a combination of a restraint system and a seat belt. In addition, the seat belt protects against the consequences of rear-end collisions and falling off ramps.

– We recommend that you always use the seat belt.

This device (variant) ensures that if the seat belt is not being used or is being used incorrectly, the truck will only drive slowly or will not drive at all.

Depending on the configuration, the functions of the working hydraulic (lifting, tilting) are possible as follows:

- can be executed normally
- can be executed slowly
- blocked

The `SAFETY BELT` message with the restricted driving and lifting functions is triggered by the following circumstances:

- Seat belt not worn and driver's seat occupied
- The seat belt is constantly fastened but the driver's seat is only occupied afterwards
- The seat belt is not fastened until after the key switch has been switched on
- The seat belt is unfastened while driving

– Sit in the driver's seat and fasten the seat belt.

If the `SAFETY BELT` message appears, the seat belt is not properly fastened. The process must be repeated.

The truck can again be operated without restrictions.

If the seat belt is released while driving, the truck will be limited to low driving speeds or will be braked to a halt.

⚠ DANGER

Risk of accident!

– The speed must be adjusted to suit the driving situation!

The increased safety provided by this function must not be misused in order to take safety risks.

SECURE TRUCK AGAINST ROLLING AWAY message

If the truck control unit detects a movement of the truck without the accelerator pedal being actuated, this message appears.

– Apply the parking brake.

– If necessary, secure the truck with wedges so that it cannot roll away.

The load on the driver's seat is released but the parking brake cannot engage due to a defect.

– Secure the truck with chocks so that the truck does not roll away.

SEAT SWITCH message

The truck is equipped with a seat switch.

If the `SEAT SWITCH` message appears, the driving functions and the working hydraulics are blocked.

The `SEAT SWITCH` message is triggered by the following situations:

- The seat switch is not actuated while the accelerator pedal or steering wheel is actuated
- The seat switch is not actuated while the operating device for the working hydraulics is actuated
- The shift time has been exceeded
- The operating time has been exceeded

The seat switch is not actuated while the accelerator pedal or steering wheel is actuated

The accelerator pedal or the steering wheel is actuated, even though no one is sitting in the driver's seat. The message `SEAT SWITCH` appears on the display. The truck will not move. This function is intended to ensure that no one can operate the hydraulic functions or

the accelerator pedal from outside the truck if no one is seated in the driver's seat.

– Sit in the driver's seat and fasten the seat belt.

The truck can be driven again without restrictions.

The seat switch is not actuated while the operating device for the working hydraulics is actuated

An operating device for the working hydraulics is actuated, even though no one is sitting in the driver's seat. The message `SEAT SWITCH` appears on the display. The working hydraulics functions cannot be executed. This function is intended to ensure that no one can operate the hydraulic functions from outside the truck if no one is seated in the driver's seat.

– Sit in the driver's seat and fasten the seat belt.

The working hydraulics can be operated again.

The shift time has been exceeded

NOTE

The shift time is adjustable.

If the key switch is switched on and the driver does not leave the seat before the set shift time is exceeded, `SEAT SWITCH` appears on the display. This is also the case if an operating device for the working hydraulics or the accelerator pedal is actuated. Depending on the configuration, the working hydraulic functions can be executed normally, only slowly or not at all.

– Stand up briefly from the seat, sit back down again and fasten the seat belt.

The truck can again be operated without restrictions.

The operating time has been exceeded

NOTE

The operating time is adjustable.

If the key switch is switched on, the parking brake is released and the driver does not leave the seat before the set operating time is exceeded, and if neither the operating devices for the working hydraulics nor the accelerator pedal are actuated during this time, `SEAT SWITCH` appears on the display. The truck will not move. Depending on the configuration, the working hydraulic functions can be executed normally, only slowly or not at all.

– Stand up briefly from the seat, sit back down again and fasten the seat belt.

The truck can again be operated without restrictions.

OVERHEATING message

If the message `OVERHEATING` appears in the display, the traction motors have overheated. The acceleration and the speed of the truck are reduced.

– Allow the truck to cool down.

– If the error persists, contact your authorised service centre.

SURVEILLANCE message

If the `SURVEILLANCE` message appears in the display, there is a fault in the process monitoring.

This shuts off the drive unit.

– Switch the key switch to the "0" position and then back to the "I" position.

– Start the engine.

– Release accelerator pedal.

– Select the drive direction again.

NOTE

If this error occurs sporadically, it can be tolerated. If the operational capacity is impaired, notify your authorised service centre.

NOT VALID message

If the message `NOT VALID` appears on the display, an incorrect driver PIN has been entered when entering the access code.

– Once the message goes out, enter the driver PIN again.

Drive-specific messages

NOTE

Some of the following messages are equipment-specific and may not appear on the display and operating unit of every truck. The following messages are therefore intended only as a reference.

EXH.GAS PURIFIER message

If the `EXH.GAS PURIFIER` message appears on the display, the particle filter is full.

– Regenerate the particle filter.

NOTE

If the `EXH.GAS PURIFIER` *message appears during regeneration, a fault has occurred.*

- *Notify the authorised service centre*

EXH.GAS PURIFIER PLEASE WAIT message

If the `EXH.GAS PURIFIER PLEASE WAIT` message appears on the display, the particle filter is being regenerated.

– Wait for particle filter regeneration.

EXH.GAS PURIFIER SERVICE! ! ! message

If the message `EXH.GAS PURIFIER SERVICE! ! !` appears on the display, the particle filter was not regenerated on time. The particle filter system must be repaired by the authorised service centre.

– To avoid damage, take the truck out of operation until it is repaired.

– Notify the authorised service centre.

CUTOUT MODE message

When automatic shut-off is activated, the message `CUTOUT MODE` appears on the display; see the section entitled "Automatic shut-off of the internal combustion engine (variant)".

– Sit on the driver's seat.

The message goes out and the truck is ready for operation again.

ADBLUE URGENT! message

If the AdBlue® filling level drops below 2 litres, the driving speed is limited to 2 km/h.

– Maintain the quality of the AdBlue®; see the section entitled "Maintenance data table".

– Top up the AdBlue®.

ADBLUE FILLING LEVEL message

If the filling level of the AdBlue® tank has fallen significantly, the `ADBLUE FILLING LEVEL` message appears on the display-operating unit.

If an AdBlue® filling level of 2 litres is reached, the driving speed is limited to 5 km/h.

– Maintain the quality of the AdBlue®; see the section entitled "Maintenance data table".

– Top up the AdBlue®.

ADBLUE REFILL 5l message

If the message `ADBLUE REFILL 5l` appears, a maximum of 5 litres of AdBlue® must be added.

– Maintain the quality of the AdBlue®; see the section entitled "Maintenance data table".

– Top up the AdBlue®.

ADBLUE QUALITY message

This truck is equipped with a sensor that measures the quality of the exhaust gas cleaned using AdBlue®.

If the quality of the exhaust gas deteriorates, the `ADBLUE QUALITY` message appears on the display and operating unit.

If the exhaust gas quality deteriorates further, the driving speed is limited to 5 km/h.

– Maintain the quality of the AdBlue®; see the section entitled "Maintenance data table".

– Top up the AdBlue®.

ADBLUE QUALITY URGENT! message

If the quality sensor detects a deterioration in the quality of the exhaust gas cleaned using AdBlue®, the message `ADBLUE QUALITY URGENT!` appears on the display-operating unit.

The driving speed is limited to 2 km/h.

– Maintain the quality of the AdBlue®; see the section entitled "Maintenance data table".

– Top up the AdBlue®.

ASH LOAD message

If the message `ASH LOAD` appears on the display, the particle filter has become clogged with ash. Repair must be performed by the authorised service centre.

– Notify the authorised service centre.

GLOW message

If the `GLOW` message appears in the display, the engine is being preheated.

Preheating can take up to 22 seconds. If the engine is already at operating temperature, preheating is not performed.

– Once the message goes out, start the engine.

HYBRID SYSTEM message

If the message `HYBRID SYSTEM` is shown on the display, the energy storage system has been deactivated because of an error.

The truck remains operational. However, the fuel consumption increases marginally.

– Contact the authorised service centre in order to rectify the error.

HYDRAULIC PUMP message

If the `HYDRAULIC PUMP` message appears on the display, there was an error in the hydraulic-pump volume control.

The engine can be overloaded and stall as a result of the overload. This causes the assisted steering and regenerative braking to malfunction. Further operation of the truck is therefore not permissible. The driving speed is limited to 5 km/h.

– Contact the authorised service centre in order to rectify the error.

FUEL FILTER message

The fuel filter is equipped with a level indicator that reports water aggregation in the fuel filter on the display and operating unit. If the message `FUEL FILTER` appears in the display, the fuel filter is saturated with water. This water must be drained.

– Drain water from the fuel filter.

COOLANT LEVEL message

If the message `COOLANT LEVEL` appears on the display, the cooling fluid level is too low.

– Check the cooling fluid level and add cooling fluid if necessary.

⚠ CAUTION

Risk of engine damage!

If the cooling fluid level is low, this indicates a leak in the cooling system.

– Check the cooling system for leaks; see the chapter entitled "Cleaning the radiator, checking for leaks".

EMPTY message

If the message `EMPTY` flashes on the display, the gas supply is almost exhausted.

– Change the LPG cylinder or fill the LPG tank.

ALTERNATOR message

If the `ALTERNATOR` message appears in the display, this means that the alternator is no longer charging the starter battery.

This may have the following causes:

- Drive belt loose or damaged
- The electrics to or from the alternator are faulty
- The alternator is faulty

NOTE

If the fault is not rectified within a short time, the starter battery will soon run out of charge and it will no longer be possible to operate the truck.

– Notify the authorised service centre.

LPG AUTO. VALVE message

If the message `LPG AUTO. VALVE` appears on the display when the LPG engine is switched off, and the engine does not switch off until after approximately 60 seconds, there is an error.

Initially, the truck can still be operated. The error message is shown on the display and operating unit until the error has been rectified by the authorised service centre.

– Notify the authorised service centre.

AIR FILTER message

If the `AIR FILTER` message appears on the display, the filter insert or the filter cartridge must be replaced.

– Replace the filter insert or the filter cartridge.

OIL PRESSURE message

⚠ CAUTION

Risk of engine damage!

If the `OIL PRESSURE` message appears in the display, the engine's oil pressure is too low.

– Stop the engine immediately.

The message can have different causes:

- The engine has overheated
- Insufficient oil
- The oil is insufficiently viscous
- Engine damage

– Check engine oil level.

– Change the engine oil if necessary.

– Notify the authorised service centre.

REGENERATION COMPLETED message

If the message `REGENERATION COMPLETED` appears on the display, parked regeneration is complete. The truck is ready for operation again.

SCR-SYSTEM SERVICE message

If the message `SCR-SYSTEM SERVICE` appears on the display, there is a fault in the SCR exhaust gas treatment system.

– Notify the authorised service centre.

SCR-SYSTEM MALFUNCTION message

If the message `SCR-SYSTEM MALFUNCTION` appears on the display, there is a fault in the SCR exhaust gas treatment system.

– Notify the authorised service centre.

PARK. REG. URGENT! ! ! message

If the message `PARK. REG. URGENT! ! !` appears on the display, parked regeneration of the particle filter is required urgently.

– Perform parked regeneration.

Until parked regeneration has been carried out, the maximum speed of the truck is reduced to 2 km/h. The lifting speed is restricted.

PARK. REG. ERROR message

If the message `PARK. REG. ERROR` appears on the display, parked regeneration was interrupted by applying the parking brake or by a malfunction in the internal combustion engine.

– Apply the parking brake.

– Restart parked regeneration.

– If the parking brake was not actuated and the message `PARK. REG. ERROR` appears anyway, notify the authorised service centre.

START PARK. REG.? message

If the message `START PARK. REG.?` appears on the display, the truck is ready for parked regeneration.

– Perform parked regeneration.

START IC ENGINE message

If the message `START IC ENGINE` appears on the display, the internal combustion engine of the truck can be started.

– Start the engine.

Refuelling

Diesel fuel - Specifications

⚠ CAUTION

Risk of component damage if non-approved fuels are used!

Use only approved fuels with the following specifications.

If non-approved fuels are used, compliance with the specified emission values and the service life of the engine cannot be guaranteed! This truck is equipped with an engine that fulfils the requirements of Directive 97/68/EC level IIIA. The truck can also be equipped with an exhaust after-treatment system (variant).

The truck may be operated only with sulphur-free diesel fuels as defined by the following standards:

- EN 590
- ASTM D 975 Grade 2-D S15
- ASTM D 975 Grade 1-D S15
- or non-road fuels (light fuel oils) in line with the EN 590 standard

If these fuel types are not used, compliance with the specified emission values and the service life of the engine cannot be guaranteed.

Minimum requirements for fuels in countries in which none of the approved diesel fuels are available can be requested from the authorised service centre. The operating company is obligated to check the permissibility of the fuel used in accordance with national regulations.

The following are not permitted:

- Admixtures of petroleum, kerosene or additional fluidity additives
- Distillate fuels for marine engines
- Jet fuels
- Biodiesel fuels
- US fuels in line with the ASTM D 975 1-D S500 or ASTM D 975 2-D S500 standards

– If necessary, query with the authorised service centre.

Ensure compliance with parameters including the following limit values in accordance with EN 590:

Parameter	Unit	Value
Cetane number[1)]	-	Min. 51
Density at 15 C	kg/m^3	820 - 845
Sulphur content	mg/kg	Max. 10
[1)] The use of diesel fuels with a lower cetane number can lead to the formation of white smoke and misfiring. In winter, the use of diesel fuels with a higher cetane number is recommended.		

Sulphur content in the diesel fuel

⚠ CAUTION

Insufficient lubrication can lead to engine damage!

– Use only sulphur-free diesel fuels in accordance with manufacturer specifications.

Insufficient lubricating properties in diesel fuels with a sulphur content of > 500 mg/kg can lead to serious problems due to wear, especially in common-rail injection systems. In sulphur-free diesel fuels in accordance with EN 590 and ASTM D 975, sufficient lubrication properties are ensured by using the corresponding fuel additives during refining.

Fuels with a sulphur content of > 0.5% (m/m) require a shortened change interval for the lubricating oil and must not be used in engines with a particle filter system. Fuels with a sulphur content of > 1.0% (m/m) are also not permissible due to high corrosion and a significant lifetime reduction of the engine.

Winter operation with diesel fuel

⚠ CAUTION

Adding petrol can lead to malfunctions in the fuel injection system!

- Do not add petrol.
- Do not add petroleum, kerosene or additional fluidity additives.
- If necessary, query with the authorised service centre.

During winter operation, special demands are placed on the low-temperature performance of fuels. Generally, diesel fuels that can be used at temperatures down to -44 C are available on the free market. Therefore, it is not necessary to add additives to improve the fluidity. Adding petrol can lead to the formation of vapour pockets (cavitation) in the fuel system. The formation of these vapour pockets disrupts the function of the fuel injection system and, if continued over a long period of time, can lead to component damage.

Non-road fuels

NOTE

In some European countries, non-road fuels are defined with the same characteristics as light fuel oil. The permissibility of fuels is handled differently in individual countries. Light fuel oils and non-road fuels are suitable for the engine as long as compliance with the limit values of EN 590 is ensured.

- *Use only sulphur-free diesel fuels in accordance with manufacturer specifications.*
- *The operating company is obligated to check the permissibility of the fuel used in accordance with national regulations.*

Filling up with diesel fuel

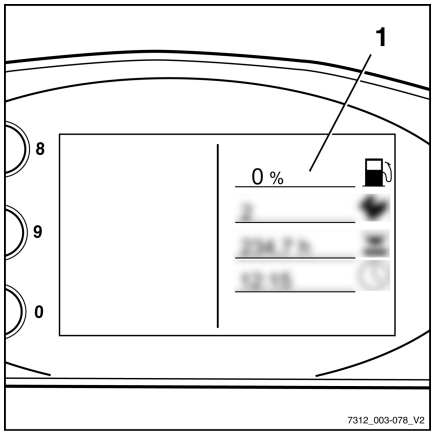

⚠ CAUTION

If the diesel fuel tank has been run empty, the fuel injection system can draw in air bubbles. This can lead to malfunctions in the fuel injection system.

– Never run the diesel fuel tank empty.

The fuel reserve is shown by the fuel level indicator (1) flashing on the display screen of the display operating unit.

⚠ DANGER

There is a risk of fire when filling up with diesel fuel.

– Turn off the engine before filling up.
– When refuelling, smoking or the use of an open flame is strictly forbidden!
– Legal regulations relating to the handling of diesel fuel must be observed.
– Note safety regulations for working with diesel fuel, see ⇒Chapter "Diesel fuel", Page 48 .

⚠ CAUTION

The truck may only be operated with diesel fuel according to DIN EN 590, otherwise there is a risk of engine damage.

– Use of fuel additives supporting soot burn-off is not permitted.
– Starting aids (such as "Startpilot" among others) must not be used.
– At low temperatures, winter diesel must be used, see ⇒Chapter "Diesel fuel - Specifications", Page 278 .

The filler neck of the fuel tank can be found on the driver's entry side near the step.

Refuelling

– Open the locking cap (2) on the fuel tank. ▷

– Fill with clean diesel fuel; for the maximum filling quantity, see ⇒Chapter "Maintenance data table", Page 322 .

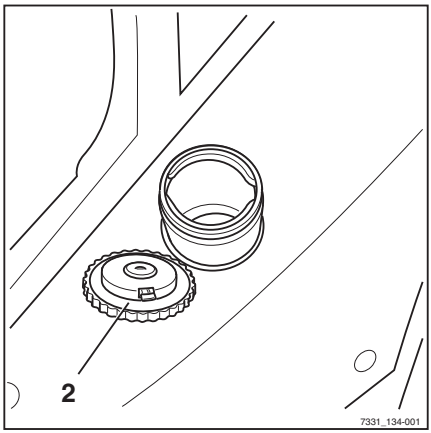

Procedure in emergencies

Emergency shutdown ▷

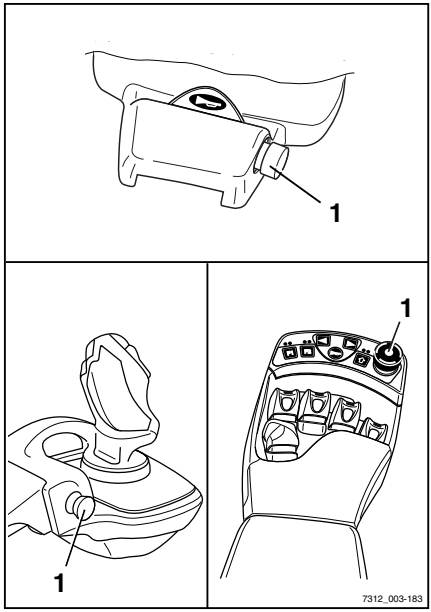

⚠ WARNING

No electric braking assistance is available when the emergency off switch is actuated!

Actuating the emergency off switch will de-energise the drive unit. The truck will not be held on a slope by the electric brake.

– Use the emergency off switch only there is a risk of fire or to carry out a functional test.

– To brake, actuate the service brake.

⚠ WARNING

There is no power steering when the emergency off switch is actuated!

The truck is equipped with a hydraulic power steering system. When the emergency off switch is actuated, the hydraulic system is completely shut down. Steering forces are increased by the remaining emergency steering function.

– Use the emergency off switch only there is a risk of fire or to carry out a functional test.

– Steer with a higher level of force.

The emergency off switch (1) is used to cancel particle filter regeneration (variant) when a fire risk is present. The emergency off switch may also be used to carry out a functional test.

NOTE

Only trucks with a particle filter system (variant) or a joystick 4Plus (variant) have an emergency off switch.

Actuating the emergency off switch in drive mode switches off the electric brake, the hydraulic system and the drive unit. This has the following effect:

- No reduction in truck speed when the accelerator pedal is released, according to the drive program selected. The truck will coast
- The electric brake does not function during the first part of brake pedal travel. To brake the truck using the mechanical brake, the brake pedal must be pushed down further
- The truck can only be held on a slope using the mechanical brake, not the electric brake

- No power steering effect. Steering forces are increased by the remaining emergency steering function.
- No hydraulic functions are available

Use the emergency off switch if there is a risk of fire or to carry out a functional test

– Press the emergency off switch (1). ▷

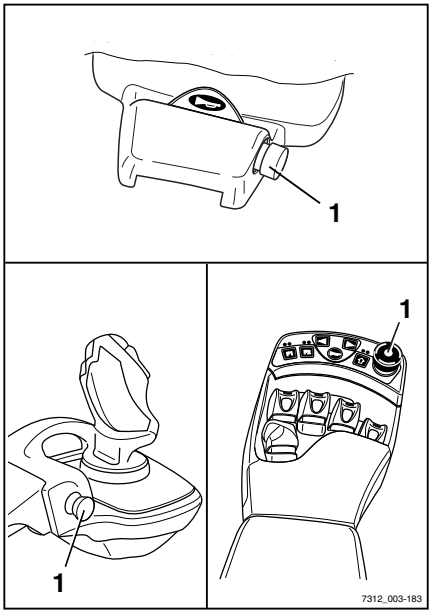

The truck will roll to a stop in drive mode.

– Brake the truck to a standstill by actuating the brake pedal.

⚠ DANGER

There is a risk of fire!

If particle filter regeneration was interrupted because of a fire risk, take the truck out of operation until the defect is remedied.

– Notify your authorised service centre.

Procedure if truck tips over

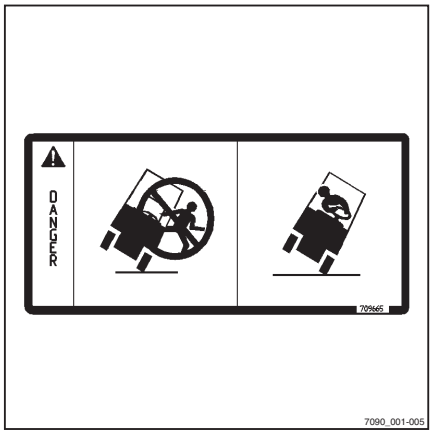

⚠ DANGER

If the truck tips over, the driver could fall out and slide under the truck with potentially fatal consequences. There is a risk to life.

Failure to comply with the limits specified in these operating instructions, e.g. driving on unacceptably steep gradients or failing to adjust speed when cornering, can cause the truck to tip over. If the truck starts to tip over, do not leave the truck under any circumstances. This increases the danger of being hit by the truck.

- Do not release your seat belt.
- Never jump off the truck.
- You must adhere to the rules of behaviour if the truck tips over.

Rules of behaviour if truck tips over:

- Hold onto the steering wheel with your hands.
- Brace your feet in the footwell.
- Bend your upper body over the steering wheel.
- Bend your body against the direction of the fall.

Emergency hammer

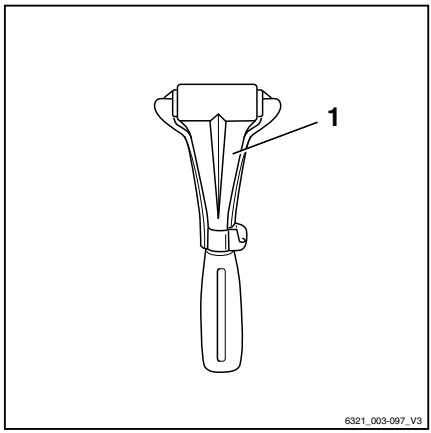

The emergency hammer is used to rescue the driver if he is shut inside the cab in a hazardous situation, for example if the truck has toppled over and the cab door cannot be opened.

Single-pane safety glass can be struck relatively safely using the emergency hammer in order for the driver to escape or be rescued from the danger area.

Using the emergency hammer

⚠ WARNING

When glass is smashed there is a risk of injury caused by glass splinters!

When the cab glass is smashed, splinters of glass can shoot into the face and cause damage to skin and eyes through cuts. When a pane of glass is smashed, the face should be turned away and covered with the crook of the free arm.

– Protect the face when smashing a pane of glass.

– Pull the emergency hammer out of its support mounting at the handle.
– Using one of the two metal tips on the head of the emergency hammer, hit the pane of glass with force until it breaks.

Emergency driving via the drive direction switch/drive direction selection lever

If the truck is equipped with two independent operating devices for the drive direction and one of these operating devices fails, the truck can be emergency driven to leave a hazardous area using the operating device.

As the truck can only be moved to a limited extent, this poses a risk of accident.

These are the possible controls for the drive direction:

- The drive direction switch on the operating device for the hydraulic functions
- The drive direction selection lever on the travel direction selector and indicator module (variant)

This emergency operation is possible in the following situations:

- The drive direction switch on the operating device for the hydraulic functions has failed.

  The message `DRIVE DIRECTION EMERGENCY OPERATION` ⚠ message appears.
- The drive direction selection lever on the travel direction selector and indicator module (variant) has failed.

  The message `DRIVE DIRECTION EMERGENCY OPERATION` ⚠ message appears.

- The display-operating unit has failed.

To perform emergency driving, proceed as follows:

– Sit on the driver's seat.
– Fasten the seat belt.
– Release the parking brake.
– Push the drive direction switch/drive direction selection lever in the desired drive direction.
– Press the accelerator pedal.
– Drive the truck to a safe area and park the truck safely.
– If the error occurs frequently, contact the authorised service centre.

Emergency lowering

If the hydraulic controller fails whilst a load is raised, emergency lowering can be performed. An emergency lowering screw is located on the hydraulics control block for this purpose.

DANGER

There is a risk of fatal injury from falling loads or parts of the truck being lowered.

– Do not walk beneath the raised load.

– Adhere to the steps detailed below.

WARNING

The load is lowered!

The lowering speed is regulated by unscrewing the emergency lowering screw.

– Note the list of points below.

Remember the following:

- Tightening torque:
  Max. 2.5 Nm
- When unscrewed a little:
  The load lowers slowly
- When unscrewed a lot:
  The load lowers quickly

The valve block (1) is located under the bottom plate. A hexagon socket wrench (2) is attached near to the engine control unit. Both of these components can be reached by opening the bonnet. The hexagon socket wrench must remain in the truck at all times.

– Open the bonnet; see "Opening the bonnet".

– Take the hexagon socket wrench (2) out of the support mounting.

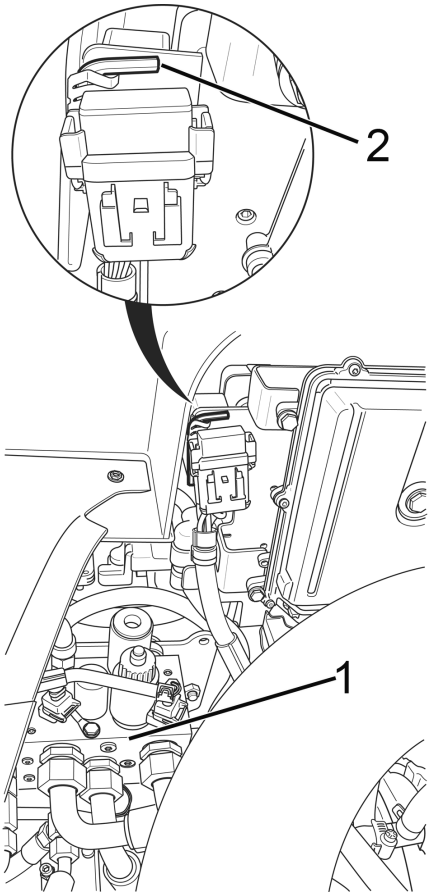

– Using the hexagon socket wrench, turn the emergency lowering screw (3) on the valve block a maximum of 1.5 revolutions to loosen.

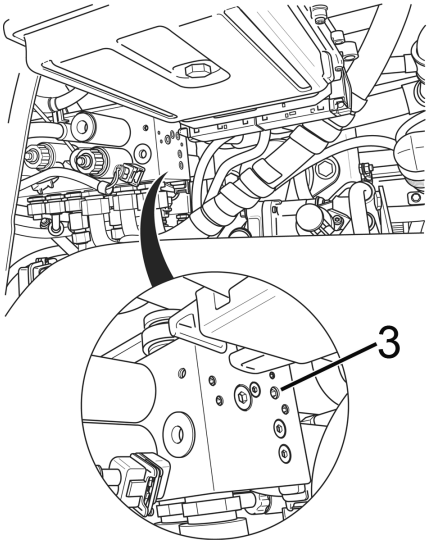

⚠ DANGER

There is a risk to life caused by falling loads or if parts of the truck are being lowered.

The speed can be controlled by the degree to which the screw is unscrewed:

– Unscrewed a little: load is lowered slowly.

– Unscrewed a lot: load is lowered quickly.

– Screw the emergency lowering screw (3) back in after the load is lowered.

Tightening torque: max. 2.5 Nm

– Return the Allen key to the support mounting provided.

– Close the bonnet; see "Closing the bonnet".

⚠ DANGER

If the truck is operated with the hydraulic controller blocked, there is an increased risk of accidents!

– After the emergency lowering procedure has been performed, have the malfunction rectified by your authorised service centre.

Disconnecting the battery

In the event of a dangerous situation (for example cable fire or electrical malfunction), the battery-terminal clip must be removed from the negative terminal.

Proceed as follows to disconnect the battery:

– Open side cover, see ⇒Chapter "Opening the side service flap", Page 325 .

– Release battery-terminal clip from the negative terminal. ▷
– Lift the battery-terminal clip off of the battery negative terminal and place it to the side.

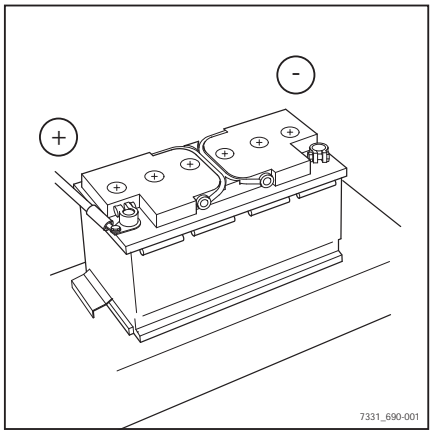

Jump-starting ▷

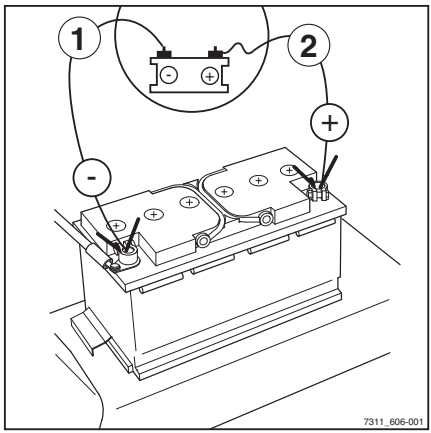

NOTE

A 12V power source (e.g. second truck of the same type) must be available.

– Open side cover, see ⇒Chapter "Opening the side service flap", Page 325 .
– Leave the engine of the current-giving truck to run.
– Connect the positive cable (2) firstly to the positive terminal of the discharged battery, then to the positive terminal of the battery that will provide the charge.
– Connect the negative cable (1) firstly to the negative terminal of the battery providing the charge, then to the negative terminal of the discharged battery.
– Start the engine; see ⇒Chapter "Starting the engine", Page 115 .
– Disconnect the negative cable (1) firstly from the negative terminal of the discharged battery, then from the negative terminal of the battery providing the charge.
– Disconnect the positive cable (2) firstly from the positive terminal of the discharged battery, then from the positive terminal of the battery providing the charge.

– Close side cover, see ⇒Chapter "Closing the side service flap", Page 326 .

Towing

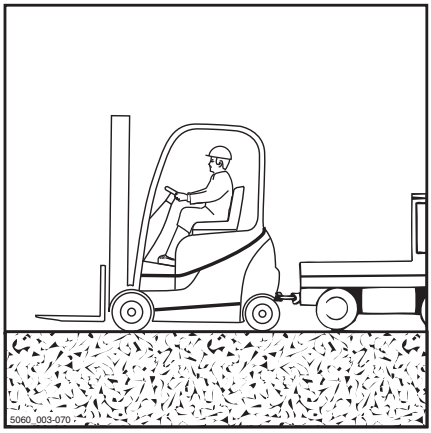

⚠ DANGER

Risk of accident due to failure of the brake system of the towing vehicle!

If the brake system of the towing vehicle is not adequately sized, the vehicle may not brake safely or the brakes may fail. The towing vehicle must be designed such that it is able to absorb the pulling and braking forces from the unbraked towed load (the actual total weight of the truck).

– Check the pulling and braking forces of the towing vehicle.

⚠ DANGER

If the towing vehicle brakes, there is a risk that the truck will drive into the towing vehicle!

If a rigid connection has not been used for power transmission in two directions during towing, the truck may drive into the towing vehicle when the towing vehicle brakes. Use a tested tow bar for safety reasons.

– Use a tested tow bar.

⚠ CAUTION

If the truck drive between the drive motor and the drive axle is not interrupted, the drive may be damaged.

– Place the drive direction switch in the neutral position.

⚠ DANGER

While manoeuvring, there is a risk of fatal injury in the area between the truck and the towing vehicle!

Inform the driver of the towing vehicle and the mechanic attaching the tow bar about the risks. When you fit the tow bar, always use a second person to guide the towing vehicle manoeuvres.

– Manoeuvre with a second person as a guide.

⚠ CAUTION

Steering is stiff! There is no power steering if the hydraulics fail!

– Select a slow towing speed to ensure that the truck and the towing vehicle can be braked and controlled effectively at all times.

⚠ CAUTION

If the truck is not steered while it is being towed, the truck may veer out in an uncontrolled manner!

– The truck being towed must also be steered by a driver.
– The driver of the truck being towed must sit in the driver's seat and fasten the seat belt before towing.
– Where possible, activate the restraint systems provided.

– Set down the load and lower the fork arms so that they are close to the ground.
– Set the drive direction switch to the neutral position.
– Apply the parking brake.
– Switch off the key switch.
– Check the pulling and braking forces of the towing vehicle.
– With a second person as a guide, manoeuvre the towing vehicle to the truck.
– Secure the tow bar to the tow coupling on the towing vehicle and on the truck.
– Sit in the driver's seat of the truck being towed and fasten the seat belt.
– Where possible, activate the restraint systems provided.
– Release the parking brake.
– Select a slow towing speed.
– Tow the truck.
– After towing, secure the truck so that it cannot roll away (e.g. by applying the parking brake or by using wedges).
– Remove the tow bar.

Transporting the truck

Transport

⚠ CAUTION

Risk of material damage from overloading!

If the truck is driven onto a means of transport, the load capacity of the means of transport, the ramps and loading bridges must be greater than the total actual weight of the truck. Components may become permanently deformed or damaged due to overloading.

– Determine the total actual weight of the truck.
– Only load the truck if the load capacity of the means of transport, the ramps and loading bridges is greater than the total actual weight of the truck.

Determining the total actual weight

▷

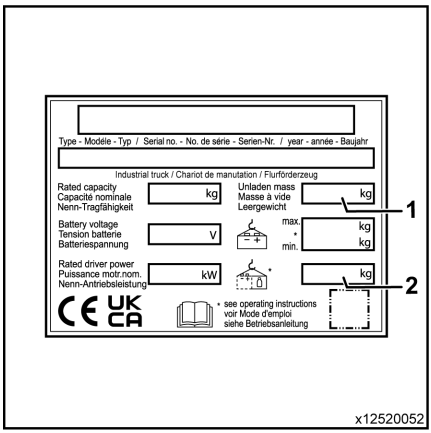

– Park the truck securely; see ⇒Chapter "Parking the truck securely and switching it off", Page 145 .
– Determine the unit weights by reading the truck nameplate and, if necessary, the attachment (variant) nameplate.
– Add the determined unit weights to obtain the total actual weight of the truck:

Tare weight (1)
\+ Ballast weight (variant) (2)
\+ Attachment net weight (variant)
\+ 100 kg allowance for driver
= Total actual weight

⚠ DANGER

Risk of accident from the truck crashing!

Steering movements can cause the tail end to veer off the loading bridge towards the edge. This may cause the truck to crash.

- Before driving over a loading bridge, ensure that it is installed and secured properly.
- Ensure that the transport vehicle onto which the truck is to be driven has been sufficiently secured against moving.
- Maintain a safety distance from the edges, loading bridges, ramps, working platforms etc.
- Drive slowly and carefully onto the transport vehicle.

Inserting wedges

- Use two wedges to secure each of the front and rear wheels against rolling away.

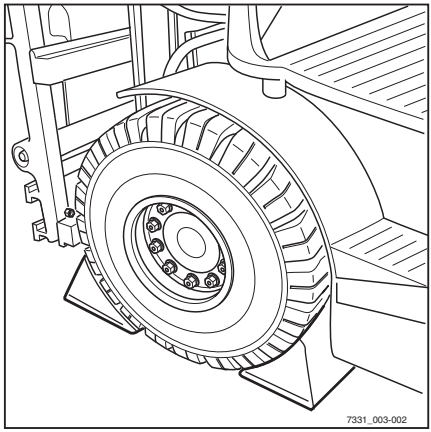

Lashing down

⚠ CAUTION

Abrasive lashing straps can rub against the surface of the truck and cause damage.

- Position slip-resistant pads beneath the lifting points (e.g. rubber mats or foam).

– Attach lashing straps (1) to both sides of the truck and lash the forklift to the rear. ▷

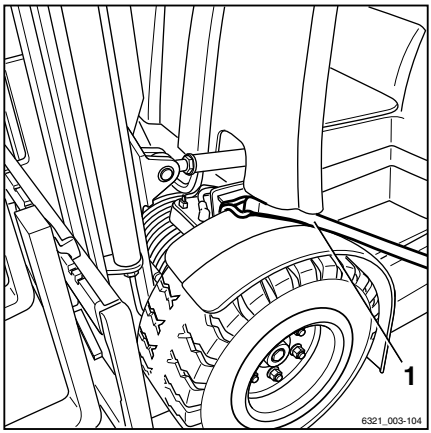

– Attach lashing straps (1) to the towing pin (2) or loop around the towing pin and lash the truck to either side. ▷

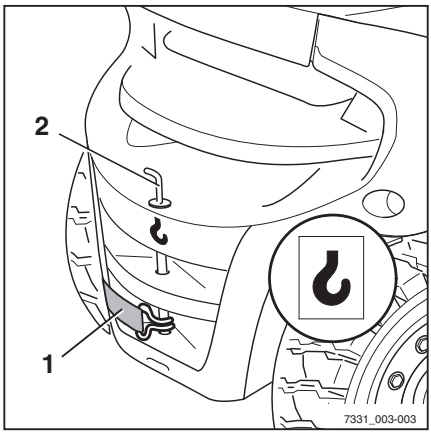

⚠ DANGER

The load may slip if the lashing straps slide off!

The truck must be lashed securely so that it cannot move during transportation.

– Make sure that the lashing straps are tightened securely and that the pads cannot slip off.

Crane loading

Crane loading is only intended for transporting the complete truck, including the lift mast, for its initial commissioning. For application conditions that require frequent loading or that are not dealt with here, please contact the manufacturer with regard to special equipment variants.

Trucks may only be laden by persons with sufficient experience in the suitable harnesses and hoists.

Determining the loading weight

– Park the truck securely; see ⇒Chapter "Parking the truck securely and switching it off", Page 145 .

– Determine the unit weights by reading them off the truck nameplate and, if necessary, the attachment (variant) nameplate.

– Add the determined unit weights to obtain the loading weight of the truck:

Tare weight (1)

\+ Ballast weight (variant) (2)

\+ Attachment net weight (variant)

= Loading weight

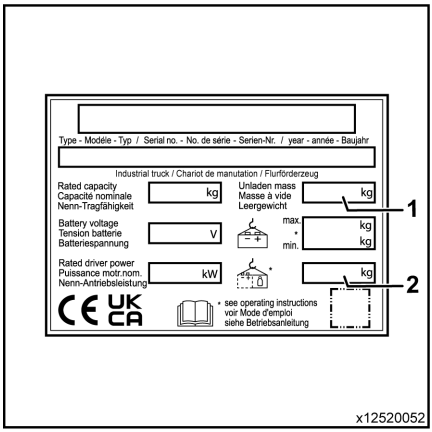

Hooking on the lifting straps

⚠ CAUTION

Harnesses may damage the truck's paintwork!

Harnesses may damage paintwork by rubbing and pressing on the surface of the truck. Particularly hard or sharp-edged harnesses, such as wires or chains, can quickly damage the surface.

– Use textile harnesses, e.g. lifting straps, with edge protectors or similar protective devices if necessary.

⚠ DANGER

There is a risk of being hit if the hoists and harnesses fail and cause the truck to fall, with potentially fatal consequences!

– Use only hoists and harnesses with sufficient load capacity for the determined loading weight.

– Use only the truck's designated lifting points.

– Make sure that harnesses, such as hooks, shackles, belts etc., are only used in the indicated load direction.

– The harnesses must not be damaged by truck parts.

NOTE

The lifting points are indicated by a hook symbol.

– Loop the lifting straps around the main traverse (3) on the outer mast of the lift mast. ▷

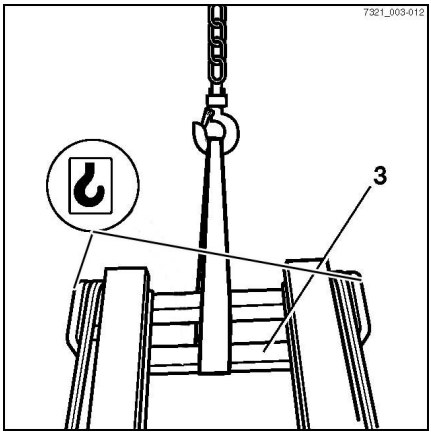

– Hook crane hooks onto the lifting points (4) intended for the truck rear weight. The lifting points are marked with the "crane hook" symbol. ▷

– Secure the tow bolt.

– Locate the truck's centre of gravity.

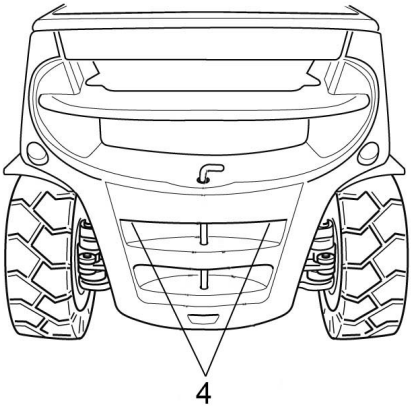

– Adjust the length of the harnesses so that the lifting eye (6) is vertically above the truck's centre of gravity.

This ensures that the truck hangs level when lifted.

– Attach the lifting straps to the lifting eye and insert the safety device (5).

⚠ CAUTION

Incorrectly fitted harnesses may damage attachment parts!

Pressure from the harnesses can damage or destroy attachment parts when the truck is lifted. If attachment parts are in the way (e.g. lighting, rear window, trademark emblem etc.), these must be removed before loading.

– Secure harnesses in such a way that they do not touch any attachment parts.

– Check that harnesses cannot collide with attachment parts.

Loading the truck

⚠ DANGER

If the raised truck swings in an uncontrolled fashion, it may crush people. There is a risk to life!

– Never walk or stand underneath suspended loads.

– Do not allow the truck to bump into anything whilst it is being lifted, or allow it to move in an uncontrolled way.

– If necessary, hold the truck using guide ropes.

– Carefully lift the truck and set it down at the intended location.

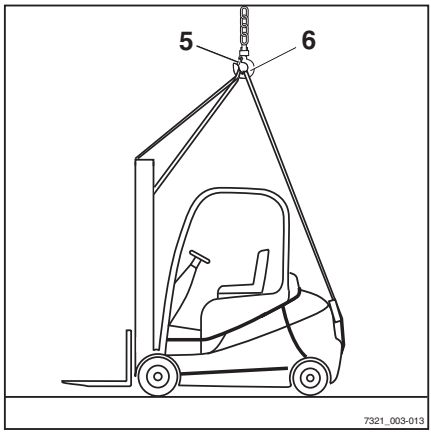

Cleaning

Clean the truck

WARNING

Risk of injury from falling off the truck!

When climbing onto the truck, there is a risk of getting stuck or slipping and falling. Use suitable equipment to reach higher points on the truck.

– Use only the steps provided for this purpose to climb onto the truck.

– Use equipment such as stepladders or platforms to reach inaccessible areas.

WARNING

Risk of fire due to flammable cleaning materials!

Flammable cleaning materials can be ignited by hot components.

– Do not use any flammable cleaning materials.

CAUTION

Risk of fire due to flammable materials!

Deposits and solids can be ignited by hot components, e.g. drive units.

– Remove deposits and solids.

CAUTION

If water penetrates the electrical system, there is a risk of a short circuit occurring!

The engine must be switched off during washing.

Do not use water to clean the area around the central electrical system; instead, only clean with a dry cloth or clean compressed air.

– Strictly adhere to the following steps.

CAUTION

Excessive water pressure or water and steam that are too hot can damage truck components.

– Strictly adhere to the following steps.

⚠ CAUTION

Aggressive cleaning materials can damage the surfaces of components!

Using aggressive cleaning materials that are unsuitable for plastics can cause plastic parts to dissolve or become brittle. The screen on the display-operating unit could become cloudy.

– Strictly adhere to the following steps.

– Park the truck securely.
– Switch off the key switch.
– Do not spray electric motors and other electrical components or their covers directly with water.
– Use only high-pressure cleaners with a maximum output power of up to 60 bar and 85°C.
– If a high-pressure cleaner is used, maintain a distance of at least 1 m between the nozzle and the object being cleaned.
– Do not aim the cleaning jet directly at adhesive labels or decal information.
– Remove all deposits and accumulations of foreign materials in the vicinity of hot components.
– Use only non-flammable fluids for cleaning.
– Observe the manufacturer's guidelines for working with cleaning materials.
– Clean plastics only with cleaning materials intended for plastics.
– Observe the manufacturer's guidelines for working with cleaning materials.
– Clean the truck exterior using water-soluble cleaning materials and water. Cleaning with a water jet, a sponge or a cloth is recommended.
– Clean all accessible areas.
– Before lubrication, clean the oil filling openings and the area around the oil filling openings, as well as the lubricating nipples.

Cleaning the electrical system

⚠ CAUTION

Cleaning electrical system parts with water can damage the electrical system.

- Cleaning electrical system parts with water is forbidden!
- Use dry cleaning materials in accordance with the manufacturer's specifications.
- Do not remove covers etc.

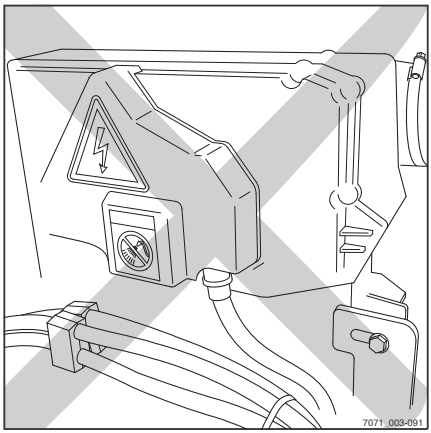

⚠ CAUTION

Possible component damage due to compressed air.

- If components are cleaned with compressed air, the air must have a maximum pressure of 0.15 bar.

This prevents liquids or small solids from being forced through slots or openings inside components and causing damage.

- Clean the electrical system parts with a metal-free brush and blow the dust off with low-pressure compressed air.

Cleaning load chains

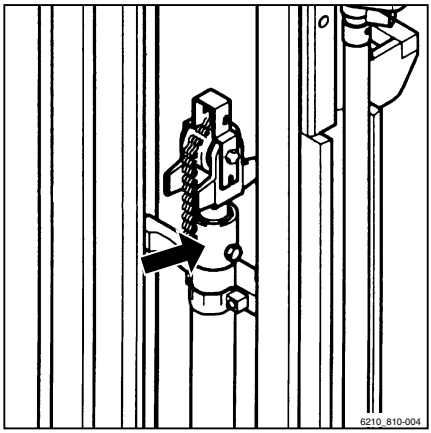

⚠ WARNING

Risk of accident!

Load chains are safety elements.

The use of cold/chemical cleaners or fluids that are corrosive or contain acid or chlorine can damage the chains and is forbidden!

- Observe the manufacturer's guidelines for working with cleaning materials.

- Place a collection vessel under the lift mast.
- Clean with paraffin derivatives, such as benzine.
- When using a steam jet, do not use additional cleaning agents.
- Remove any water in the chain links using compressed air immediately after cleaning. Move the chain several times during this procedure.

– Immediately after drying the chain, spray it with chain spray. Move the chain several times during this procedure.

For chain spray specifications, see the "Maintenance data table" chapter.

ENVIRONMENT NOTE

Dispose of any fluid that has been spilled or collected in the collection vessel in an environmentally friendly manner. Follow the statutory regulations.

Cleaning the windows

Any panes of glass, e.g. cab windows (variant), must always be kept clean and free of ice. This is the only means of guaranteeing good visibility.

CAUTION

Do not damage the rear window heater (inside)!

– Take great care when cleaning the rear window and do not use any objects with sharp edges.

– Clean the windows using a commercially available glass cleaner.

After washing

– Carefully dry the truck (e.g. with compressed air).

– Sit on the driver's seat and start up the truck in accordance with regulations.

CAUTION

Risk of short circuit!

– If any moisture has penetrated into the engine despite the precautionary measures taken, this must first be dried with compressed air.

– The truck must then be started up to prevent possible corrosion damage.

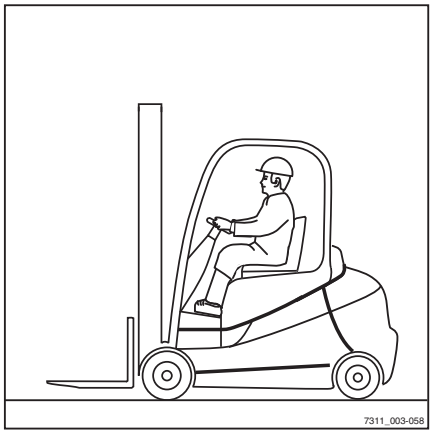

Decommissioning

Shutting down and storing the truck

⚠ CAUTION

Component damage due to incorrect storage!

If the truck is stored or shut down incorrectly for more than two months, it may suffer corrosion damage. If the truck is parked in an ambient temperature of less than -10°C for an extended period, the battery will cool down. The electrolyte may freeze and damage the battery.

– Carry out the following measures before shutdown.

⚠ CAUTION

Tyre deformation as a result of continuous loading on one side!

Have the truck raised and jacked up by the authorised service centre so that all the wheels are clear of the ground. This prevents permanent deformation of the tyres.

⚠ CAUTION

Danger of damage from corrosion due to condensation on the truck!

Many plastic films and synthetic materials are watertight. Condensation water on the truck cannot escape through these covers.

– Do not use plastic film as this facilitates the formation of condensation water.

NOTE

Store only fully charged batteries.

Measures to be implemented before shutdown

– Store the truck in a dry, clean, frost-free and well ventilated environment.

– Clean the truck thoroughly; see chapter "Cleaning".

– Lift the fork carriage to the stop several times.

- Tilt the lift mast forwards and backwards several times and, if fitted, move attachment repeatedly.
- To relieve the strain on the load chains, lower the fork onto a suitable supporting surface, e.g. a pallet.
- Check hydraulic oil level and top up if required.
- Apply a thin layer of oil or grease to all untreated moving parts.
- Grease the forklift truck.
- Lubricate the joints and controls.
- Fill the fuel tank.
- Remove the starter battery and store in a warm and dry location.
- Regularly check the charge status and recharge the starter battery if necessary.
- Spray all exposed electrical contacts with a suitable contact spray.
- Preserve the engine as specified by the manufacturer.
- Cover the truck with vapour permeable materials, such as cotton, in order to protect against dust.
- If the truck is to be shut down for even longer periods, contact your authorised service centre to find out about additional measures.

Recommissioning after decommissioning

If the truck has been decommissioned for longer than six months, the truck must be carefully checked before being recommissioned. As with the yearly safety inspection, this check must also include all safety-related aspects of the truck.

- Thoroughly clean the truck.
- Oil joints and controls.
- Lubricate the lubrication points.

- Check the condition and the acid density of the battery. Charge the battery if necessary.
- Restore engine to normal condition according to regulations of engine manufacturer.
- Check the engine oil for condensation water and replace the oil if necessary.
- Check hydraulic oil for condensation water; change if necessary.
- Have the same checks and tasks carried out by the authorised service centre that were carried out before initial commissioning.
- Carry out the checks and tasks that are to be performed before daily use.
- Recommission the truck.

During recommissioning, the following points in particular must be checked:

- Drive, control, steering
- Brake system (service brake, parking brake, regenerative brake)
- Lifting system (load-carrying equipment, load chains, mounting)

NOTE

For further information, see the workshop manual for the truck and contact the authorised service centre.

5

Maintenance

Safety regulations for maintenance

General information

⚠ DANGER

Risk of fatal poisoning!

It is dangerous to leave the engine running in enclosed spaces. The engine consumes oxygen and emits carbon dioxide, carbon monoxide and other poisonous gases. There is a risk of fatal poisoning!

– Only operate the truck in areas that are well ventilated.

To prevent accidents during maintenance work and repair work, all necessary safety measures must be taken, e.g.:

– Apply the parking brake.

– Switch off the key switch and remove the key.

– Ensure that the truck cannot move unintentionally or start up inadvertently.

– If required, have the truck jacked up by the authorised service centre.

– Have the raised fork carriage or the extended lift mast secured against accidental lowering by the authorised service centre.

– Insert an appropriately sized wooden beam as an abutment between the lift mast and the cab, and secure the lift mast to prevent it tilting backwards unintentionally.

– Observe the maximum lift height of the lift mast, and compare the dimensions from the technical data with the dimensions of the hall into which the truck is to be driven. These steps are taken to prevent a collision with the ceiling of the hall and to avoid any damage caused as a result.

Working on the hydraulic equipment

The hydraulic system must be depressurised prior to all work on the system.

Working on the electrical equipment

Work may only be performed on the electrical equipment of the truck when it is in a voltage-free state. Function checks, inspections and adjustments on energised parts must only be performed by trained and authorised persons, taking the necessary precautions into account. Rings, metal bracelets etc. must be removed before working on electric components.

To prevent damage to electronic systems with electronic components, such as an electronic driving regulator or lift control, these components must be removed from the truck prior to the start of electric welding.

Work on the electrical system (e.g. connecting a radio, additional headlights etc.) is only permitted with approval from the authorised service centre.

Working on the ignition system

To prevent personal injury and/or destruction of the ignition system, please observe the following:

- Only connect and disconnect ignition system lines, including high-voltage lines and measuring device lines, with the ignition switched off.
- If the engine is to be operated at starting speed but not actually started (e.g. for a compression pressure test), disconnect the connection assembly from the ignition coil.
- Use of a quick charger to jump start the engine is only permitted for a period of up to 1 minute at max. 16.5 volts.
- The engine may only be washed when the ignition is switched off.
- When performing electric or point welding, completely disconnect the battery.
- Trucks that have a fault in the ignition system, or a suspected fault, may only be towed if the plug is disconnected from the ignition coil.

Safety devices

After maintenance and repair work, all safety devices must be reinstalled and tested for operational reliability.

Set values

The device-dependent set values must be observed when making repairs and when changing hydraulic and electrical components. These are listed in the appropriate sections.

Lifting and jacking up

⚠ DANGER

There is a risk to life if the truck tips over!

If not raised and jacked up properly, the truck may tip over and fall off. Only the hoists specified in the workshop manual for this truck are allowed and are tested for the necessary safety and load capacity.

- Only have the truck raised and jacked up by the authorised service centre.
- Only jack the truck up at the points specified in the workshop manual.

The truck must be raised and jacked up for various types of maintenance work. The authorised service centre must be informed that this is to take place. Safe handling of the truck and the corresponding hoists is described in the truck's workshop manual.

Working at the front of the truck

⚠ DANGER

Risk of accident!

If the lift mast or fork carriage is raised, no work may be performed on the lift mast or at the front of the truck unless the following safety measures are observed.

- When securing, only use chains with sufficient load-bearing capacity.
- Contact the authorised service centre.

⚠ CAUTION

Possibility of damage to the ceiling!

– Note the maximum lift height of the lift mast.

Securing the lift mast against tilting backwards

A hardwood beam with a cross-section of 120 x 120 mm is required. The length of the hardwood beam must approximately correspond to the width of the fork carriage (b3). To avoid impact injuries, the hardwood beam must not protrude beyond the outer contour of the truck. A maximum length matching the total width (b1) of the truck is recommended.

– Obtain the dimensions (b1) and (b3) from the corresponding VDI datasheet.

– Clamp the hardwood beam (1) between the driver protection structure (2) and the lift mast (3). ▷

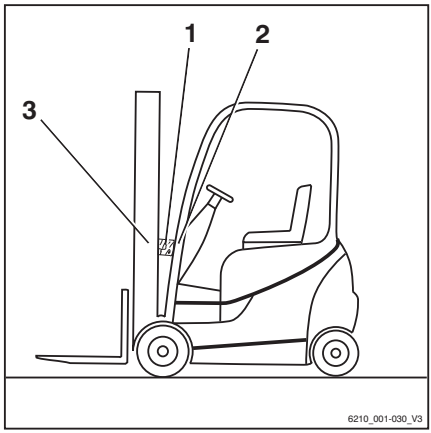

Removing the lift mast

⚠ DANGER

Risk of accident!

This work must only be performed by an authorised service technician.

– Arrange for an authorised service technician to remove the lift mast.

Securing the lift mast against falling off

⚠ DANGER

Risk of accident!

This work must only be performed by an authorised service technician.

– Arrange for an authorised service technician to secure the lift mast.

General maintenance information

Personnel qualifications

Only qualified and authorised personnel are allowed to perform maintenance work. Regular safety checks and checks after unusual incidents must be performed by a competent person. The competent person must conduct their evaluation and assessment from a safety standpoint, unaffected by operational and economic conditions. The competent person must have sufficient knowledge and experience to be able to assess the condition of a truck and the effectiveness of the protective devices in accordance with technical conventions and the principles for testing trucks.

Maintenance work without special qualifications

Simple maintenance work, such as checking the hydraulic oil level, may be carried out by untrained personnel. A qualification such as those held by a competent person is not required to carry out this work. The required tasks are described in the chapter entitled "Remaining ready for operation".

Information for carrying out maintenance

This section contains all information required to determine when the truck needs maintenance. Carry out maintenance work within the time limits according to the hour meter and using the following maintenance check lists. This is the only way to ensure that the truck remains ready for operation and provides optimal performance and service life. It is also a precondition for any warranty claims.

Maintenance timeframe

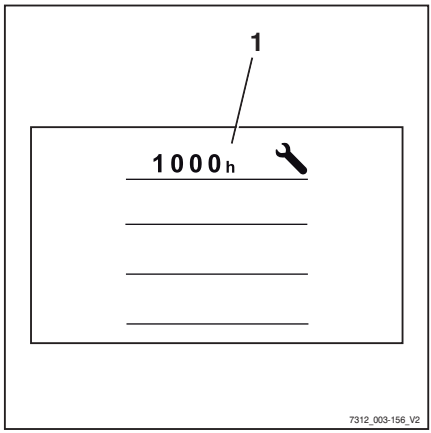

– Carry out maintenance work on the truck in accordance with the "Service in" display (1).

– The maintenance check lists indicate the maintenance work that is due.

The intervals are defined for standard use. Shorter maintenance intervals can be defined in consultation with the operating company, depending on the application conditions of the truck.

The following factors may necessitate shorter maintenance intervals:

- Contaminated, poor quality roads
- Dusty or salty air
- High levels of air humidity
- Extremely high or low ambient temperatures, or extreme changes in temperature
- Multi-shift operation with a high duty cycle
- Specific national regulations for the truck or individual components

⚠ CAUTION

Risk of component damage!

Any deviating technical information in these operating instructions takes precedence over the information in the original engine operating instructions.

– If you have any questions, please contact your authorised service centre.

Maintenance — 1000 hours/annually

At operating hours										Carried out	
1000		2000		4000		5000		7000			
8000		10000		11000		13000		14000		✓	✗
Chassis, bodywork and fittings											
Check chassis for cracks											
Check overhead guard/cab and panes of glass for damage											
Check controls, switches and joints for damage, and apply grease and oil											
Check driver's seat for correct function and for damage											
Check driver restraint system for correct function and for damage, and clean.											
Check the signal horn											
Variant: Check the dual pedal for damage and correct function, and lubricate											
Tyres and wheels											
Check the tyres for wear and check the air pressure if necessary											
Check wheels for damage and check the tightening torques											
Power unit											
Check the screw joints and for leaks on the drive axle and clean the cooling fins											
Check the oil level in the drive wheel unit and multi-disc brake											
Internal combustion engine											
Check the condition of the internal combustion engine (visual inspection)											
Change the engine oil and replace the oil filter											
Check the toothed belt, spur gears and V-belt											
Replace the air filter (main cartridge)											
Check the cooling system for leaks and correct function											
Check coolant; top up if necessary											
Check exhaust system											
DEUTZ: Check the intercoolers, and remove lubricating oil and condensation water											
VW: Replace the spark plugs											
Maintain the particle filter											
Fuel system											
Check the fuel system for leaks and correct function											
Check the fuel pre-filter (water trap) and drain water if necessary											
Replace the fuel pre-filter (yearly)											
Replace the fuel filter (main filter)											

At operating hours										Carried out	
1000		2000		4000		5000		7000			
8000		10000		11000		13000		14000		✓	✖
LPG system											
Check the LPG system for damage											
Check the solenoid shut-off valve, and if necessary check the high-pressure relief valve (1.7 bar)											
Check the gas cylinder valve for cleanliness and correct function, check over-pressure safety device (30 bar)											
Change the LPG filter											
Overhaul the evaporator (MD/Cobra) Replace the sticker											
Check the screw joints for secure attachment and perform a leak test											
Check CO content in the exhaust gas											
Check that the duration of engine run-on before the engine stops is acceptable											
Steering											
Check the steering system for correct function and leaks											
Check that the steering wheel is firmly seated and check the turning handle for damage											
Steering axle: Check that it is firmly attached, check for leaks, and apply grease											
Check the steering stop											
Brake											
Check all mechanical brake parts for condition and correct function											
Service brake function check											
Parking brake function check											
Electrical system											
Check all power cable connections											
Check the switches, transmitters and sensors for correct function											
Check the lighting and indicator lights											
Starter battery											
Measure the cold-start current; recharge or replace the battery if necessary											
Hydraulics											
Check the hydraulic system for condition, correct function and leaks											
Check the hydraulics blocking function (ISO valve)											
Check the oil level											
Lift mast											

At operating hours										Carried out	
1000		2000		4000		5000		7000			
8000		10000		11000		13000		14000		✓	✗
Check the mast bearings for damage and lubricate. Check the tightening torque											
Check the mast profiles for damage and wear, and lubricate											
Check the guide in the lower (load reversal) mast profile for damage and for wear											
Check the load chains for damage and wear, adjust and lubricate											
Check the lift cylinders and connections for damage and leaks											
Check the guide pulleys for damage and wear											
Check the support rollers and chain rollers for damage and wear											
Check the play between the fork carriage stop and run-out barrier											
Check the tilt cylinders and connections for damage and leaks											
Check the fork carriage for damage and wear											
Check the fork arm interlock for damage and correct function											
Check the fork arms for wear and deformation											
Check that there is a safety screw on the fork carriage or on the attachment											
Special equipment variant											
Check the fresh-air filter in the heating system and beat out the filter if necessary											
Heating system: Check for damage and observe the manufacturer's maintenance instructions											
Check the fresh-air filter and recirculated air filter in the air conditioning and beat out the filters if necessary											
Air conditioning: function check											
Check the attachments for wear and damage; observe the manufacturer's maintenance instructions											
Check the trailer coupling for wear and damage; observe the manufacturer's maintenance instructions											
General											
Read out error numbers and delete list											
Reset maintenance interval											
Check labelling for completeness											
Test drive the truck											

Maintenance - 3000 hours/every two years

At operating hours											Carried out	
3000		6000		9000		12000		15000			✓	✗
Note												
Perform all 1000-hour maintenance work												
Power unit												
Gearbox oil and multi-disc brake: Change gearbox oil												
Replace the bleeder screws on the drive wheel units												
Internal combustion engine												
Replace the toothed belt, spur gears and V-belt												
Replace the water pump (recommendation: consult the operating company)												
Replace the safety cartridge in the air filter												
Replace the coolant. DEUTZ: every 6000 hours or 4 years; VW: every 9000 hours or every 5 years												
DEUTZ: Replace the filter element in the diesel particle filter (every 6000 hours)												
LPG system												
Change all the hoses on the LPG system												
Hydraulics												
Change the hydraulic oil												
Replace the return line filter and the breather filter												
Replace the high-pressure filter												
For RX70-50/600 (7334, 7338) only: Replace the accumulator												
Special equipment												
Replace the fresh-air filter and the recirculated air filter in the air conditioning system												
Replace the accumulator dryer in the air conditioning system and refill with new refrigerant												

Ordering spare parts and wearing parts

Spare parts are provided by our spare parts service department. The information required for ordering parts can be found in the spare parts list.

Only use spare parts as per the manufacturer's instructions. The use of unapproved spare

parts can result in an increased risk of accidents due to insufficient quality or incorrect assignment. Anyone using unapproved spare parts shall assume unlimited liability in the event of damage or harm.

Quality and quantity of the required operating materials

Only the operating materials specified in the maintenance data table may be used.

– The required consumables and lubricants can be found in the maintenance data table.

Oil and grease types of a different quality must not be mixed. This negatively affects the lubricity. If a change between different manufacturers cannot be avoided, drain the old oil thoroughly.

Before carrying out lubricating work, filter changes or any work on the hydraulic system, carefully clean the area around the part involved.

When topping up working materials, use only clean containers!

Lubrication plan

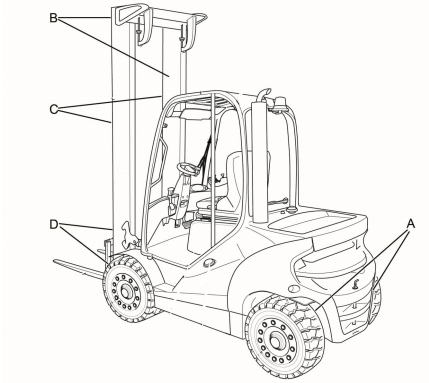

Code[1]	Lubrication point
(A)	Four lubricating nipples on each side of the steering axle for the axle stub bearing and track rod arm
(B)	Sliding surfaces on the lift mast
(C)	Load chains
(D)	One lubricating nipple each on both lift mast bearings

[1]See the following chapter, "Maintenance data table", under this Code.
for the respective lubricant specificationThis lubrication plan describes the series-production truck with standard equipment. For maintenance points on variant trucks, see the relevant chapter and/or instructions provided by the manufacturer.

Maintenance data table

General lubrication points

Code	Unit	Operating material	Specifications	Amount
	Lubrication	High-pressure grease	ID no. 0147873	As required

Battery

Code	Unit	Operating material	Specifications	Amount
	System filling	Distilled water		As required
	Insulation resistance		DIN 43539 VDE 0510	Min. 1000 Ω/V against earth

Actuators/joints

Code	Unit	Operating material	Specifications	Amount
	Lubrication	High-pressure grease	ID no. 0147873	As required
		Oil	SAE 80 MIL-L2105 API GL-4	As required

Electrical system

Code	Unit	Operating material	Specifications	Amount
	Insulation resistance		DIN EN 1175 VDE 0117	Min. 1000 Ω/V against earth

Hydraulic system

Code	Unit	Operating material	Specifications	Amount
	System filling	Hydraulic oil	HVLP 68 DIN 51524, Part 3	Max. 48 l
		Hydraulic oil for the food industry (variant)	USDA H1 DIN 51524	

Tyres

Code	Unit	Operating material	Specifications	Amount
	Superelastic tyres	Wear limit		To wear mark
	Solid rubber tyres	Wear limit		To wear mark

Code	Unit	Operating material	Specifications	Amount
	Pneumatic tyres	Minimum tread depth		1.6 mm
		Air pressure		See information on truck

Steering axle

Code	Unit	Operating material	Specifications	Amount
(A)	Axle stub bearing, spherical bearing	Multi-purpose grease	DIN 51825 KPF2	As required
	Wheel nuts on steering axle	Torque wrench		For further information, refer to the workshop manual for the truck in question

Drive axle

Code	Unit	Operating material	Specifications	Amount
	Wheel nuts on drive axle	Torque wrench		For further information, refer to the workshop manual for the truck in question
	Wheel gear	Mineral oil	FUCHS TITAN GEAR HYP LD SAE 80W-90	For further information, refer to the workshop manual for the truck in question

Lift mast

Code	Unit	Operating material	Specifications	Amount
(B)	Lubrication	High-pressure grease	ID no. 0147873	As required
	Stop	Play		Min. 2 mm
(D)	Lift-mast bearing	Grease	Aralub 4320 DIN 51825-KPF2N20 ID no. 0148659	Fill with grease until a small amount of fresh grease escapes

Load chains

Code	Unit	Operating material	Specifications	Amount
(C)	Lubrication	High-load chain spray	Fully synthetic Temperature range: -35 °C to +250 °C ID no. 0156428	As required

Cooling system

Code	Unit	Operating material	Specifications	Amount
	System filling	Corrosion inhibitor and cooling system protecting agent/water	G12 plus (violet) TL-VW 774 F	Approx. 12 l 40% cooling system protecting agent/60% water for frost protection down to -25 C

Air conditioning

Code	Unit	Operating material	Specifications	Amount
	System filling	Refrigerant	ID no. 7449600005	Standard cab: 1400 g
				Beverage cab: 1485 g

Fuel tank

Code	Unit	Operating material	Specifications	Amount
	Fuel tank	Diesel fuel	EN 590, DIN 51628, ASTM D975, NATO F-54 non-road fuels (light fuel oils, EN 590 quality)	Approx. 58 l

Engine

Code	Unit	Operating material	Specifications	Amount
	System filling	Engine oil	DQC III-10 LA, DQC IV-10 LA	With filter change 8.5 l
	Air filter	Filter cartridge and safety cartridge		

Washer system

Code	Unit	Operating material	Specifications	Amount
	System filling	Screen wash	Winter, ID no. 172566	As required

Providing access to maintenance points

Opening the side service flap

▷

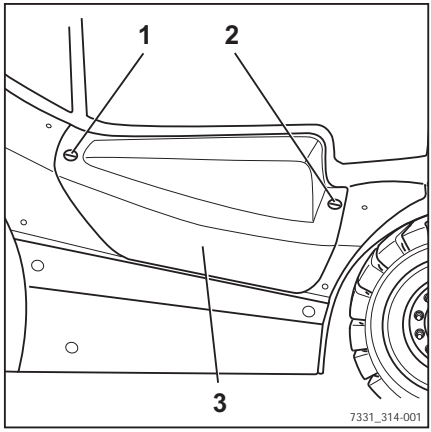

– Turn the left-hand quick release clamp (1) clockwise.

– Turn the right-hand quick release clamp (2) anticlockwise.

NOTE

The side service flap (3) is secured to the chassis by a lock washer (4).

– Carefully fold down the side service flap.

▷

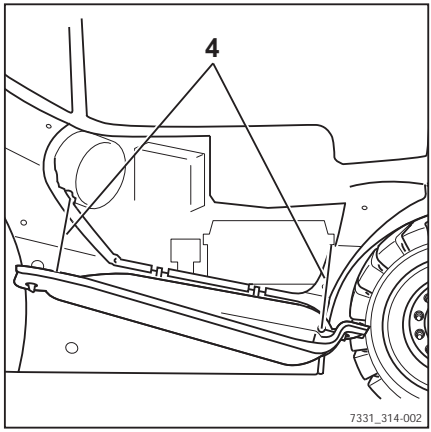

– Lift the side service flap out of the truck contour and let it hang from the truck.

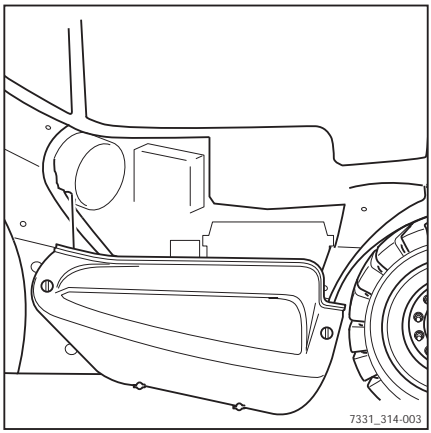

Closing the side service flap

– Carefully place the side service flap (1) on the recess in the chassis.

– Turn the left-hand quick release clamp (2) anticlockwise.

– Turn the right-hand quick release clamp (3) clockwise.

– Ensure that the side cover is within the truck contour and is securely locked.

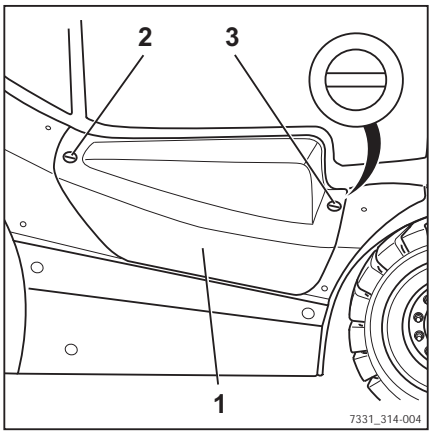

Opening the bonnet

⚠ WARNING

Risk of injury!

– Switch off the engine before opening the bonnet!

⚠ CAUTION

When opening the bonnet, the driver's seat may be damaged if it is not positioned all the way forward.

– Slide the driver's seat all the way forwards.

⚠ CAUTION

If the right-hand window of the cab (variant) is open, there is a chance that the window handle may be damaged when the bonnet is opened.

– Make sure that the right-hand cab window is closed.

– On trucks equipped with a cab (variant), close the right-hand cab window.

– Remove all loose objects from the right-hand shelf.

– Move the steering column (1) as far forwards as possible and secure; see section entitled "Adjusting the steering column".

– Slide the driver's seat (2) all the way forward; see section entitled "Adjusting the MSG 65/MSG 75 driver's seat".

– On trucks equipped with a rear window (variant), push the seat backrest forwards; see section entitled "Adjusting the MSG 65/MSG 75 driver's seat".

▷

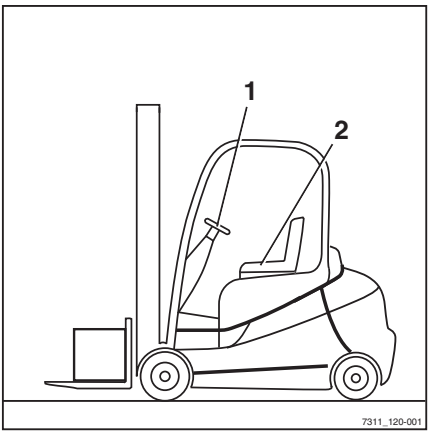

– Firmly insert a narrow screwdriver into the slot (4) of the bonnet release until the interlock opens.

– Use the handle to open the bonnet fully.

▷

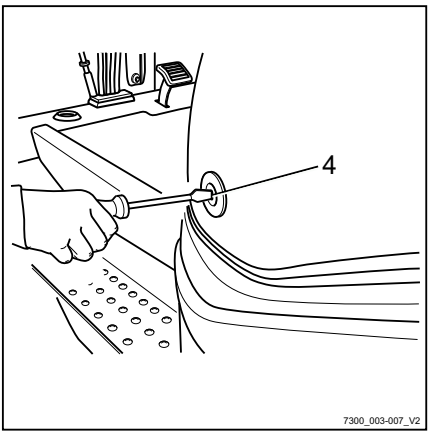

– If the gas spring is equipped with a position lock (variant), open the bonnet until the latch (1) of the gas spring (2) snaps into place.

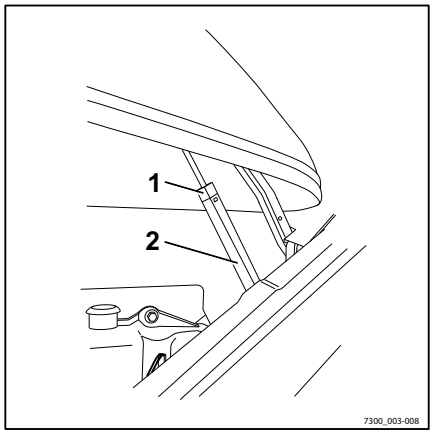

⚠ WARNING

Risk of injury from the bonnet lowering!

The bonnet is fitted with a gas spring that holds the bonnet in the open position. When additional load is present, for example heavy objects, strong wind or other persons, the bonnet can lower suddenly. Cold weather and ageing can also reduce the performance of the gas spring and cause the bonnet to lower.

– If the force of the gas spring is deteriorating, replace the gas spring.
– If the gas spring has a position lock (variant), make sure that the latch is engaged.
– To replace the gas spring, contact the authorised service centre.

Closing the bonnet

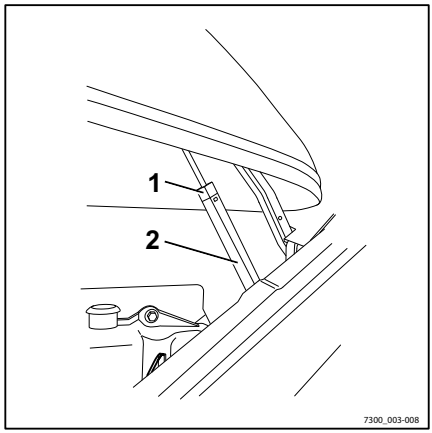

⚠ WARNING

When closing the bonnet, there is a risk of crushing!

When closing the bonnet, nothing must come between the bonnet and the edge of the chassis.

– Do not grasp any edges. Always close the bonnet by placing both hands on the handles.

⚠ CAUTION

Risk of damage!

The bonnet can be equipped with a gas spring (2) with a position lock (variant). This prevents the gas spring from being compressed. Exerting force when closing the bonnet will damage the gas spring or bonnet suspension.

– Before closing the bonnet, check whether the gas spring is equipped with a position lock (variant).
– If the gas spring is equipped with a position lock (variant), release the latch (1) before closing the bonnet.

Releasing the position lock (variant)

- Press the latch (1) at the PRESS mark and lower the bonnet slightly.
- Release the latch.

Closing the bonnet

- Holding it by the handle, pull down the bonnet until the lock audibly engages.

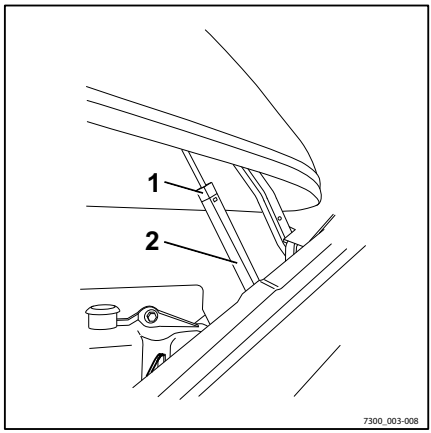

- Adjust the seat (2); see the section on "Adjusting the MSG 65/MSG 75 driver's seat".
- Adjust the steering column (1); see the section on "Adjusting the steering column".

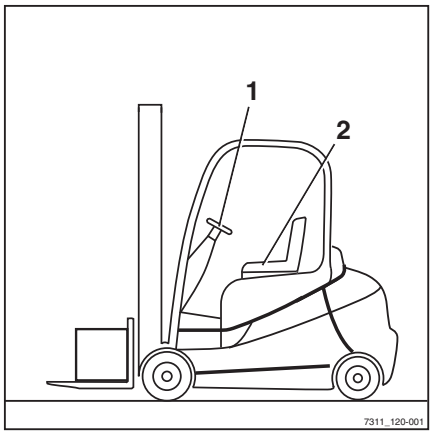

Installing and removing the bottom plate

Removing the bottom plate

⚠ CAUTION

Risk of short circuit if cables are damaged!

- Check the connection cables for damage.
- When removing and reinstalling the bottom plate, make sure that the connecting cables are not damaged.

NOTE

The bottom plate has a recess into which the operator can insert their fingers in order to lift it. The recess is beneath the rubber mat.

NOTE

The accelerator pedal is attached to the bottom plate and is removed with the bottom plate. The connecting plug for the accelerator is located underneath the bottom plate.

– Open the bonnet.

– Remove the rubber mat.

– Grasp the recess in the bottom plate (1).

– Raise the bottom plate slightly.

– Pull out the bottom plate under the brake pedal and set it down upright.

▷

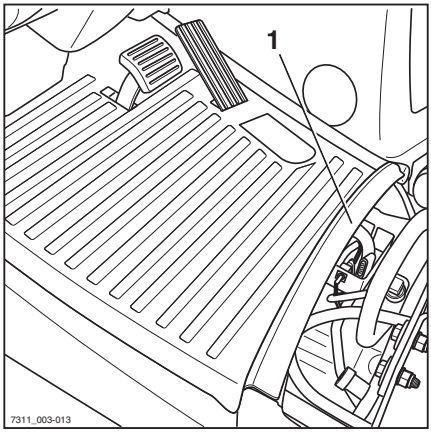

– Disconnect the plug connection from the accelerator pedal (2). ▷

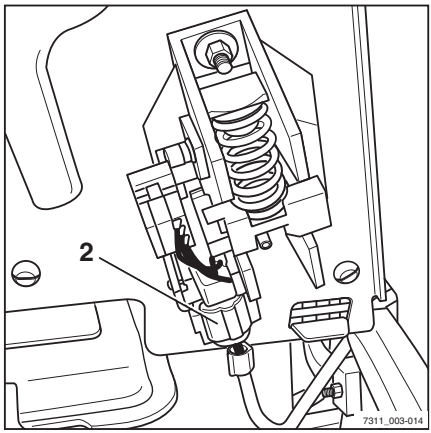

– Remove the floor plate and place it in a secure location.

Installing the bottom plate

⚠ WARNING

Risk of crushing between the bottom plate and the frame edge!

If limbs or objects are between the bottom plate and frame edge when the bottom plate is closed, they can be crushed.

– Make sure that, when you close the bottom plate, there is nothing between the bottom plate and the frame edge.

– Set down the bottom plate upright in the footwell.

– Connect the connection assembly to the accelerator pedal.

– Position the bottom plate at the front.

– Carefully guide the bottom plate down and close.

– Insert the rubber mat.

– Close the bonnet.

Preserving operational readiness

Checking the engine oil level

NOTE

The truck must be positioned on level ground for this check.

– Open the bonnet; see the chapter entitled "Opening the bonnet".

– Pull out the oil dipstick (1) and wipe it.

– Insert the oil dipstick to the stop and pull out again.

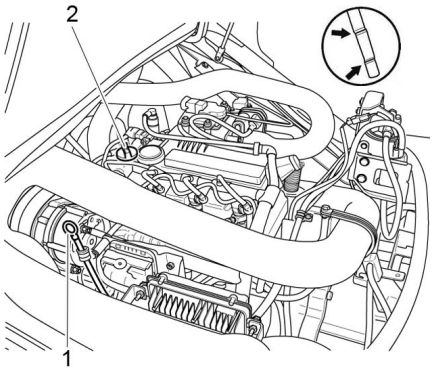

The oil level must be between the marks (arrows).

– If the oil level only reaches up to the lower mark, unscrew the filler cap (2) and top up the oil. When doing so, observe the information regarding the quantity and specification in the chapter entitled "Maintenance data table".

– Then screw the filler cap (2) back on tightly.

– Insert the oil dipstick to the stop.

– Close the bonnet; see the chapter entitled "Closing the bonnet".

Topping up the coolant and checking the concentration of the coolant additive

CAUTION

Risk of engine damage!

If the cooling-fluid level is low, this indicates leakage in the cooling system.

– Check the leak tightness of the cooling system; see ⇒Chapter "Cleaning the radiator, checking for leaks", Page 335 .

WARNING

Coolant and coolant additives are hazardous to your health.

Observe the safety regulations for handling coolant; see ⇒Chapter "Coolant and cooling fluid", Page 50 .

The filler cap (1) of the coolant reservoir is located on the top of the counterweight.

A sensor monitors the coolant level. As soon as the "COOLANT LEVEL" message appears on the display-operating unit, proceed as follows:

⚠ WARNING

Risk of scalding!

Only open the radiator filler cap when the engine has cooled down.

- Slowly open the filler cap (1) and release the over pressure.
- Unscrew further and remove the radiator filler cap.
- If necessary, top up the coolant up to the marking plate in the coolant reservoir. For information about the filling quantity in the cooling system, see the "maintenance data table".
- For information about the correct concentration of coolant, refer to the following chapter.
- Screw the filler cap (1) of the coolant reservoir back on tightly.

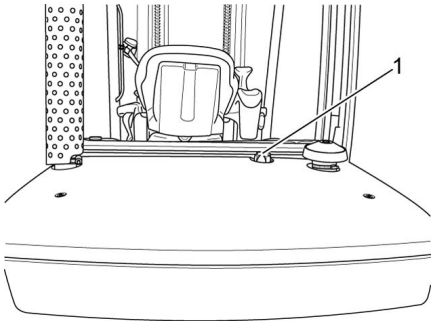

Concentration of the coolant additive

⚠ CAUTION

Risk of corrosion!

The percentage of coolant additive must always be at least 40%, even if frost protection is not needed in warmer climates.

If an increased level of frost protection is required for climatic reasons, the percentage of coolant additive can be increased to up to 60%.

The percentage of coolant additive must not exceed 60%, as otherwise the frost protection is reduced. In addition, the cooling effect is also reduced.

Only use clean, softened water for the water percentage.

Frost protection up to °C	Water percentage %	Percentage of coolant additive %
-25	60	40
-30	55	45
-35	50	50
-40	40	60

Filling quantity in the cooling system; see ⇒Chapter "Maintenance data table", Page 322 .

⚠ CAUTION

Coolant additive with a different specification must not be added!

– Top up using coolant additive and corrosion inhibitor in accordance with the maintenance data table; see ⇒Chapter "Maintenance data table", Page 322 .

Only use coolant additive according to the manufacturer's guidelines.

Cleaning the radiator, checking for leaks ▷

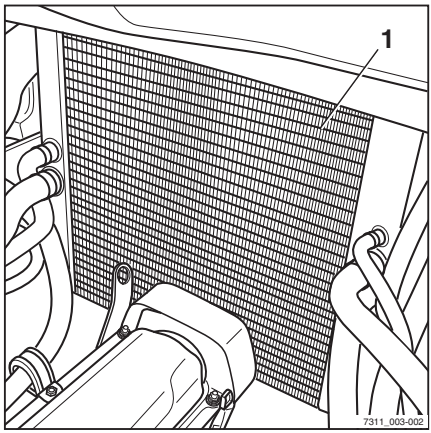

- Park the truck securely.
- Open the bonnet.
- Clean the radiator (1).
- Clean the radiator fins using a suitable brush and blow them out using compressed air (max. 2 bar).
- Check the radiator and coolant hoses for leaks and tighten the clips if necessary.

⚠ CAUTION

Risk of engine damage!

If the cooling fluid level is low, this indicates a leak in the cooling system.

- Check whether the leakage has been eliminated.
- If not, notify the authorised service centre.

- Close the bonnet.

Replacing the air filter cartridges ▷

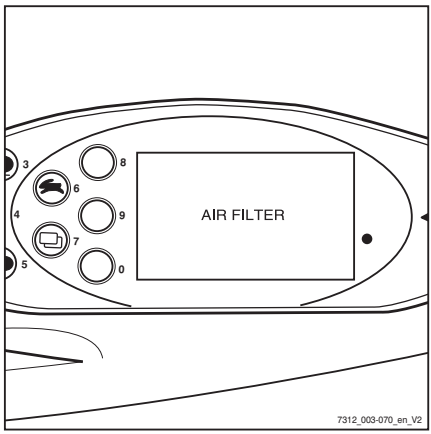

NOTE

The filter cartridge must be replaced when the `AIR FILTER` *message appears on the display and operating unit, or every two years.*

- Open the side service flap; see the chapter entitled "Opening the side service flap"

– Release the three clamps (1) on the air filter and remove the air filter cover (2). ▷

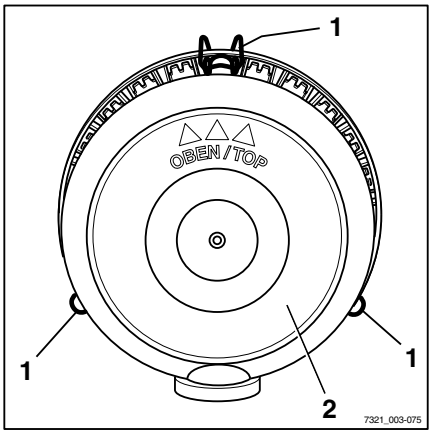

– Remove the main cartridge (3). ▷

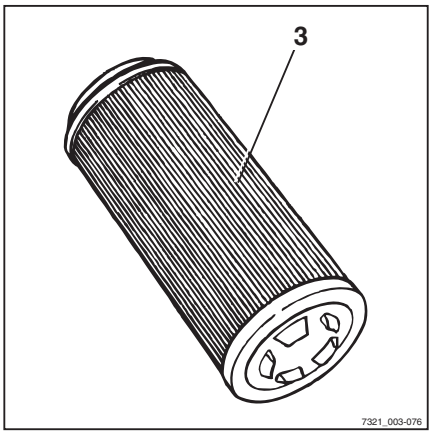

⚠ CAUTION

Risk of engine damage!

The safety cartridge must remain in the air filter housing until all residual dirt has been removed from the housing so that no dirt enters the intake system!

– Wipe out the air filter housing using a damp cloth.

– Remove the safety cartridge (4), check for contamination, and change it if necessary. ▷
– Refit the safety cartridge.
– Insert a new main cartridge (3).

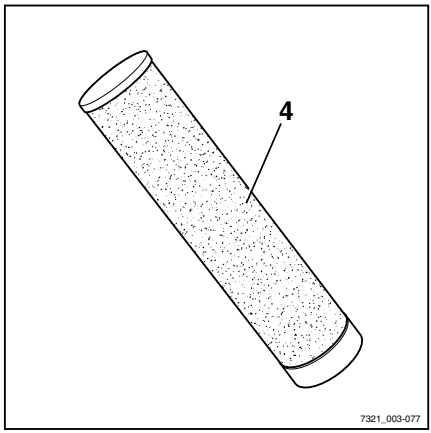

– Fit the air filter cover (5) with the mark (6) facing upwards. ▷
– Engage the three clamps (7) on the air filter.
– Close the side service flap.

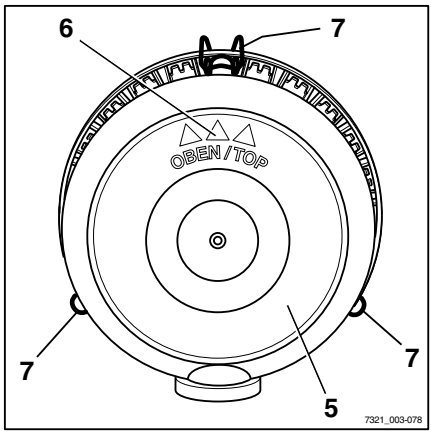

Draining water from the fuel filter

⚠ WARNING

Consumables are toxic!

Observe the safety regulations when handling diesel fuel.

NOTE

It is particularly important to drain the water when operating in tropical climates and depending on the quality of fuel used.

A sensor in the fuel filter monitors the water level in the filter. When the water level exceeds a certain level, the message "FUEL FILTER" appears in the display-operating unit. This message means that the water that has collected in the fuel filter needs to be drained. To do this, proceed as follows:

– Open the bonnet. The fuel filter (1) is located in the front left of the engine compartment (when viewed in the drive direction), directly adjacent to the locking eye (2) on the bonnet lock.
– Place a suitable collection container (approx. 100 cm³) below the cap (3) on the underside of the fuel filter.
– Carefully unscrew the cap (3).
– Drain off the water that has collected in the filter until clean fuel escapes.
– Screw the cap (3) back on tightly.

▷

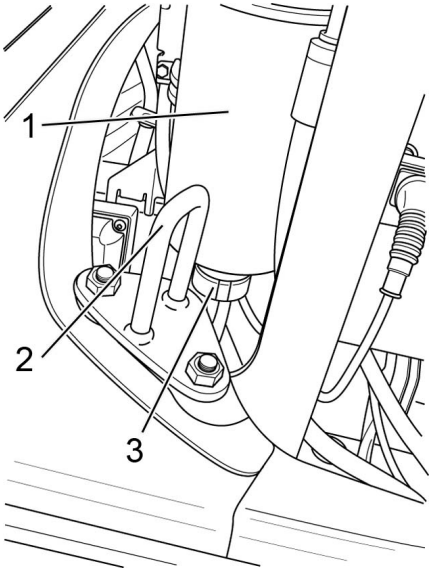

Lubricating the joints and controls

– Oil or grease other bearing points and joints according to the maintenance data table; see ⇒ Chapter "Maintenance data table", Page 322 .

- Driver's seat guide
- Lubricate bonnet hinges at the lubricating nipple
- Control linkage for valves
- In the cab, lubricate door hinges at the lubricating nipple (variant)
- Lubricate shafts and joints in dual-pedal operation (variant)

Checking the door latch

- Inspect the condition of the catch bolt and check for wear.
- Check the lock mechanism for easy operation.

Maintaining the seat belt

⚠ DANGER

There is a risk to life if the seat belt fails during an accident!

If the seat belt is faulty, it may tear or open during an accident and no longer keep the driver in the driver's seat. The driver may therefore be hurled against the truck components or out of the truck.

- Ensure operational reliability by continually testing.
- Do not use a truck with a defective seat belt.
- Have any defective seat belts replaced by your authorised service centre.
- Only use genuine spare parts.
- Do not make any changes to the seat belt.

NOTE

The checks below must be carried out on a regular basis (monthly). In the case of significant strain, a daily check is necessary.

Checking the seat belt

– Pull out the seat belt (3) completely and check for fraying. ▷

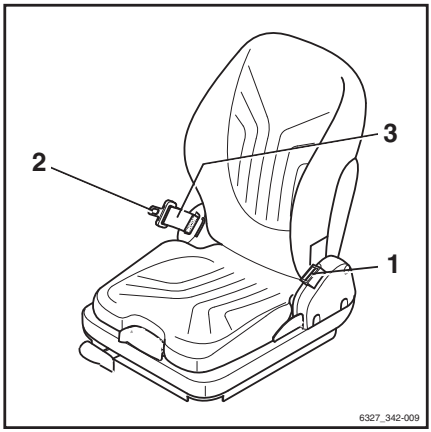

The seat belt must not be frayed or cut. The stitching must not be loose.

– Check that the seat belt is not dirty.

– Check whether parts are worn or damaged (including the fixing points).

– Check that the buckle (1) locks properly. ▷

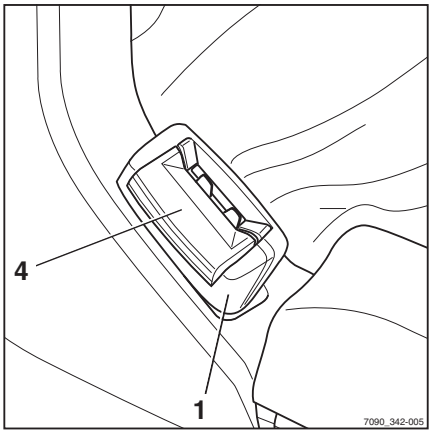

When the belt tongue (2) is inserted, the seat belt must be held securely. The belt tongue (2) must release when the red button (4) is pressed.

– The automatic blocking mechanism must be tested at least once a year:

– Park the truck on level ground.

– Pull out the seat belt using a jerking movement.

The automatic blocking mechanism must block the extension of the belt.

– Tilt the seat at least 30° (if necessary, remove the seat).

– Slowly pull out the seat belt.

The automatic blocking mechanism must block the extension of the belt.

Cleaning the seat belt

– Clean the seat belt if it is dirty but without using chemical cleaning materials (a brush will suffice).

Replacing after an accident

The seat belt must always be replaced by the authorised service centre after an accident.

Checking the driver's seat

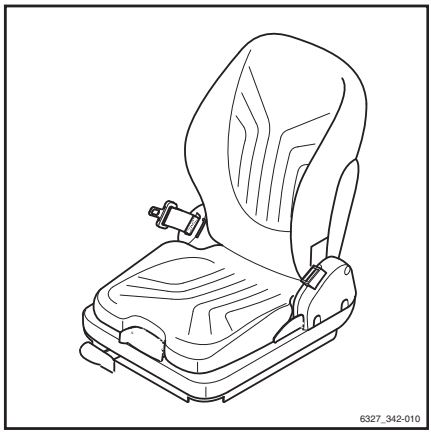

⚠ WARNING

Risk of injury!

– After an accident, check the driver's seat with attached restraining belt and fastening.

– Check the controls for correct operation.

– Check the condition of the seat (e.g. wear on the upholstery) and secure fastening to the hood.

⚠ WARNING

Risk of injury!

– Have the seat repaired by the service centre if you identify any damage during the checks.

Greasing the automatic tow coupling

NOTE

Wear to moving parts can be significantly reduced by appropriate servicing and regular lubrication of the coupling.

– Avoid over-greasing!

NOTE

Close the coupling before cleaning with a high-pressure cleaner. After cleaning, lubricate the coupling pin, tow bar eye and its supporting surface again.

Model RO*243

- Pull out the safety handle (3).
- Push the hand lever (2) upwards.
- Grease using the lubricating nipple(1) in accordance with the maintenance data table; see ⇒ Chapter "Maintenance data table", Page 322 .
- Close the coupling by raising the coupling pin with a suitable tool.
- For journeys with a rigid drawbar trailer, lubricate the underside of the tow bar eye and the supporting surface on the coupling.

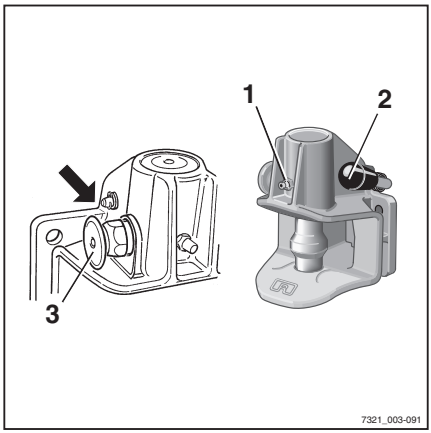

- Determine the wear on the coupling pin.

The diameter of the spherical part must not be less than 36.5 mm.

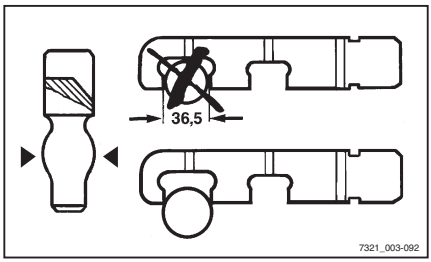

Model RO*244 A

- Open coupling.

- Grease using the lubricating nipple(1) in accordance with the maintenance data table; see ⇒ Chapter "Maintenance data table", Page 322 .
- Grease coupling pin, tow bar eye and its supporting surface.

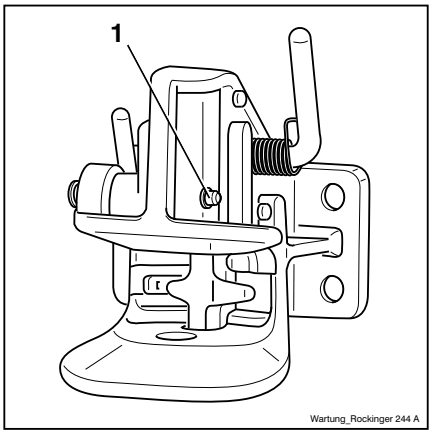

Model RO*245

- Lubricate via the points provided for this purpose (lubricating nipple, opened coupling) in accordance with the maintenance data table; see ⇒Chapter "Maintenance data table", Page 322 .
- Grease the supporting surface for the towbar eye.

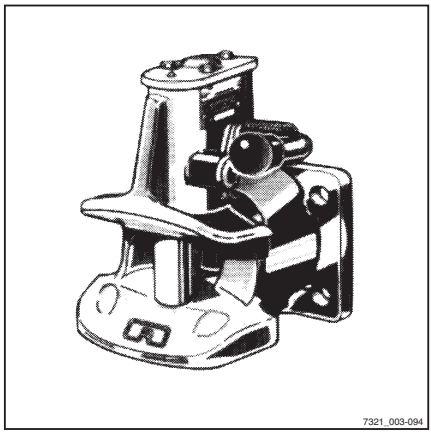

Model RO*841

- Lubricate via the points provided for this purpose (lubricating nipple, opened coupling) in accordance with the maintenance data table; see ⇒Chapter "Maintenance data table", Page 322 .
- Grease the supporting surface for the towbar eye.

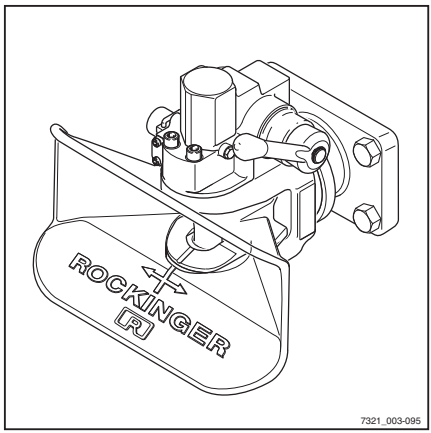

Servicing wheels and tyres

⚠ WARNING

Risk of accident!

Uneven wear reduces the stability of the truck and increases the braking distance. The level of wear exhibited by tyres on the same axle must be approximately the same.

- Worn or damaged tyres (left or right) must be replaced immediately.
- When changing wheels or tyres, ensure that this does not cause the truck to tilt to one side (e.g. always replace right-hand and left-hand wheels at the same time).
- Changes must only be made following consultation with the manufacturer.

⚠ WARNING

Risk to stability!

Tyre quality affects the stability of the truck. There is a risk of tipping!

When using pneumatic tyres or solid rubber tyres, rim wheel parts must never be changed and rim wheel parts from different manufacturers must not be mixed.

- Obtain approval from the truck manufacturer before using a different type of tyre or a different tyre manufacturer.

Checking condition and wear of the tyres

Superelastic tyres (variant)

▷

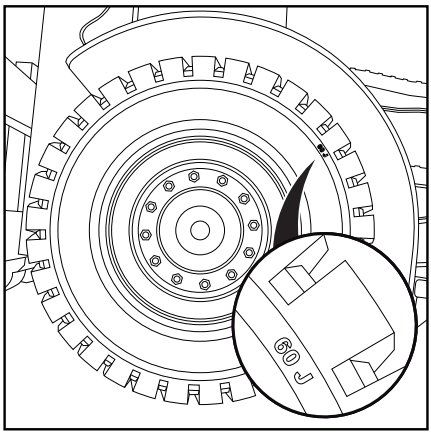

- Check the remaining distance between the tyre tread and the (60 J) wear mark.

Super-elastic tyres (variant) can be worn down to the (60 J) wear mark.

- Remove any foreign bodies embedded in the tyre.

Pneumatic tyres (variant)

▷

– Check the tread depth on all four tyres.

The tread depth for pneumatic tyres (variant) must be **at least 1.6 mm** at every point on the tread. If the tread is worn down to the wear mark (2) at any point on the tyre, replace the tyres on one axle.

– Remove any foreign bodies embedded in the tyre.

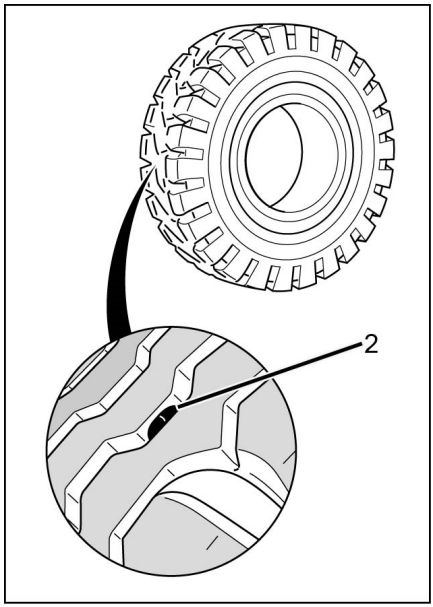

Checking the air pressure

▷

NOTE

The correct air pressure for pneumatic tyres (variant) is determined by the type of tyre used. The air pressure measured must correspond to the manufacturer's information.

– Observe the air pressure value indicated on the adhesive label (1) on the truck.

– Check the air pressure of all four tyres and compare with the air pressure values stated on the adhesive labels.

– Add or release air as required if the air pressure deviates from the values stated.

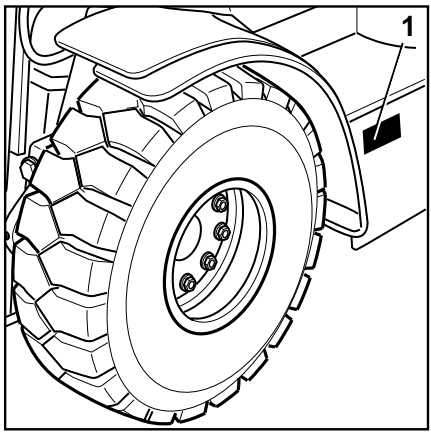

Checking wheel fastenings

▷

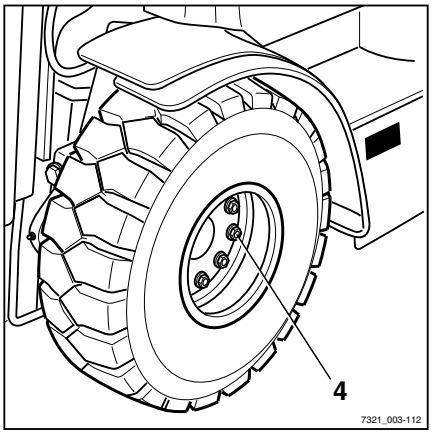

- Check that all wheel fastenings (4) are securely fastened and retighten as necessary.
- Observe the relevant torques; see section entitled "Maintenance data table".

Servicing the battery

NOTE

Battery maintenance is carried out in accordance with the battery manufacturer's operating instructions.

WARNING

There is a risk of damage, short circuiting and explosion.

Do not place any metallic objects or tools on the battery. Keep away from naked flames and fire. Smoking is forbidden.

Checking the battery charge status

- Remove the side cover.

– For maintenance-free batteries, check the charge status at the inspection window (1):

- **Green:** The battery is optimally charged.
- **Black:** The battery charge status is no longer optimal. The battery must be recharged. After recharging, the indicator changes back to green
- **Transparent (light-coloured):** The charge status is no longer adequate for the truck to start reliably. The battery must be replaced.

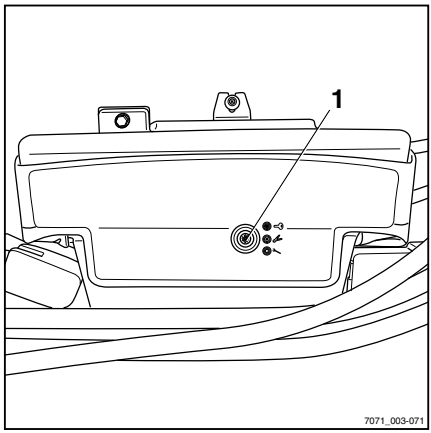

Charging the battery

– For batteries that are not maintenance-free, check the level of the battery acid.

⚠ WARNING

The electrolyte (dilute sulphuric acid) is poisonous and caustic.

– Observe the safety regulations for handling battery acid ⇒Chapter "Battery acid", Page 47 .

– Check the battery acid level.

The battery acid must come up to the lower edge of the insert in the battery housing or 5 mm above the upper edge of the plates. Observe the manufacturer's specifications!

⚠ CAUTION

The battery can be damaged!

– Top up the missing fluid with distilled water only.

– Unscrew the battery cell cover and check the acid density using an acid siphon.

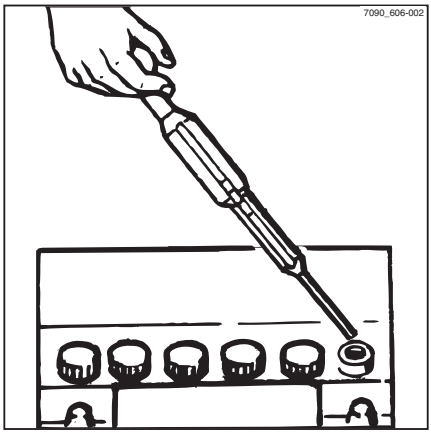

The acid density must reach the values in the table. The listed acid densities refer to an acid temperature of 27°C.

Acid density	Empty	Full
Normal	1.13	1.28
Tropic	1.08	1.23

⚠ WARNING

Risk of explosion! Charging releases gases that are explosive.

During the charging process, the surface of the battery cells must be clear to ensure sufficient ventilation.

The charging area must be properly ventilated.

Keep the bonnet open during charging; avoid spark formation near the battery.

– Charge discharged batteries immediately until they are fully charged again.

The charging current must not exceed 1/10 of the capacity.

The battery cell covers must be kept dry and clean.

Any spilled battery acid must be neutralised immediately.

Terminals and cable shoes must be clean, lightly coated with battery grease and screwed on tightly.

– Once the charging process is complete, screw the battery cell covers back on.

– Refit the cover at the back.

Replacing fuses

⚠ DANGER

Risk of fire!

Using the wrong fuses can result in short circuits.

– Use only fuses with the prescribed nominal current, see the section entitled "Fuse assignment".

– Remove the cover at the back.

– Open the cover fastenings (1) and remove the cover.
– Replace the defective fuse with one that is rated for the nominal current according to "Fuse assignment".
– Close the cover to secure the fuse box.
– Install the back covers.
– Perform a function check. If the error persists or if the fuse is still defective, notify your authorised service centre.

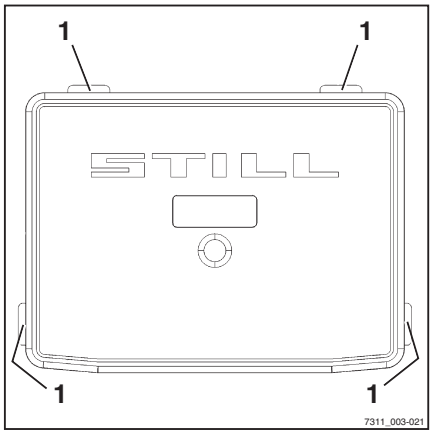

Lubricating the lift mast and roller track

– Remove dirt and lubricant residue from the roller track.
– Lubricate the roller tracks (1) of the outside, middle, and inside mast with a super-pressure adhesion lubricant to reduce wear. See ⇒Chapter "Maintenance data table", Page 322 .

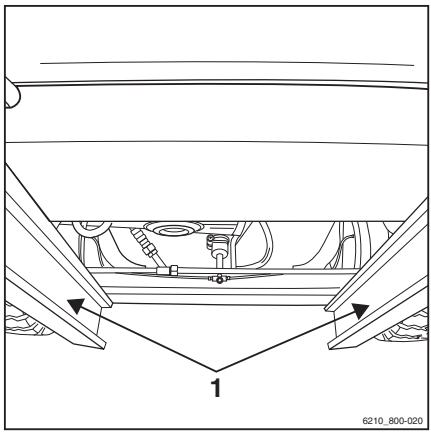

NOTE

Spray the roller track evenly from a distance of approx. 15-20 cm. Wait approx. 15 minutes until the equipment is ready to use again.

1000-hour maintenance/annual maintenance

Other work that must be carried out

– Perform all tasks required to maintain full operability; see the chapter entitled "Remaining ready for operation".

Checking the hydraulic oil level

⚠ CAUTION

Hydraulic oils are hazardous to your health and are under pressure during operation.

– Observe the safety regulations for working with hydraulic oils; see ⇒Chapter "Hydraulic fluid", Page 46 .

– Park the truck securely; see ⇒Chapter "Parking the truck securely and switching it off", Page 145 .

– Open the side cover. See chapter entitled "Opening the side cover".

– Unscrew and remove the breather filter with oil dipstick (1) from the filler neck. ▷

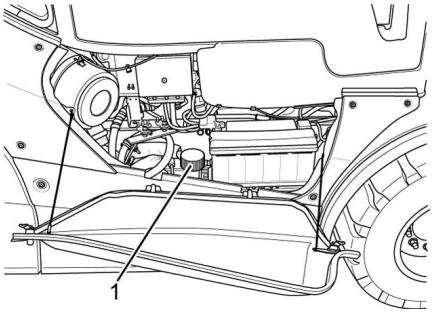

– Check the oil level. The oil level must be at least up to the mark (2) on the dipstick.

– If the oil level does not reach the specified fill level, pour hydraulic oil of the corresponding specification (see ⇒Chapter "Maintenance data table", Page 322) into the filler neck until it reaches the upper mark as a maximum.

▷

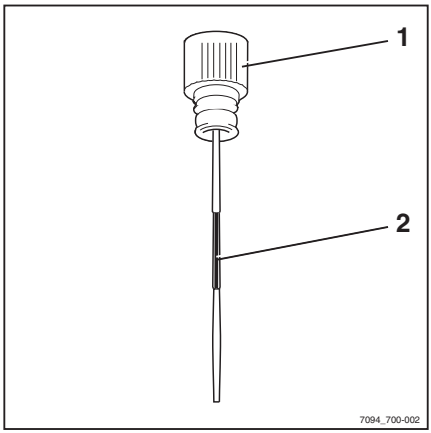

NOTE

Use a funnel.

– Insert the breather filter with oil dipstick back into the filler neck and screw it in tightly.

– Close the side cover again; see chapter entitled "Closing the side cover".

ENVIRONMENT NOTE

Carefully collect any spilled oil and dispose of it in an environmentally friendly manner.

Checking the hydraulic system for leak tightness

WARNING

Risk of injury from hydraulic oil under pressure!

Hydraulic oil under pressure can escape from leaking pipes and lines and cause injuries.

– Before checking, release the pressure from the hydraulic system.

– Wear suitable protective gloves, protection goggles etc.

⚠ CAUTION

Hydraulic hoses become brittle over time!

– Do not store hydraulic hoses for more than two years.
– Do not use hydraulic hoses for more than two years if they are subject to a high level of wear.
– Comply with the specifications of "DGUV Rule 113-020" within Germany.
– Outside of Germany, observe the national regulations for the country of use.

– Check pipe and hose connection screw joints for leaks (traces of oil).

Replace hose lines if they display the following abnormalities:

- Outer layer has been damaged, or is brittle or cracked
- Leakages
- Deformation (e.g. with blisters or kinks)
- A fitting has come loose
- A fitting is badly damaged or corroded

Replace pipes if they display the following abnormalities:

- Abrasion
- Deformation and bending
- Leakages

Checking the lift cylinders and connections for leaks

▷

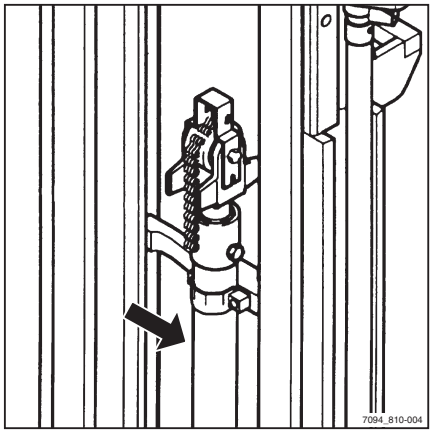

⚠ WARNING

Risk of injury

Observe safety regulations for working on the lift mast, see the "Working at the front of the truck" chapter.

– Check hydraulic connections and lift cylinders for leaks (visual inspection).
– Have leaking screw joints or leaking hydraulic cylinders repaired by the authorised service centre.

Checking the fork arms

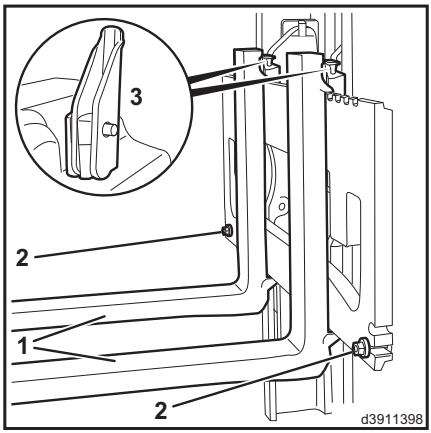

⚠ CAUTION

Fork arms must not be uneven!

– Always replace both fork arms.

– Check the fork arms (1) for visible deformation and excessive wear.

No cracks or deformations must be visible on the fork arms in the area around the fork bend. Wear must not amount to more than 10% of the original thickness.

– Check that the locking screws (2) are present and securely attached.

– Replace any worn or deformed fork arms.

Check the condition and correct operation of the fork latch:

– Move the locking lever (3) into a vertical position.

It must be possible to move the fork arm.

– Move the locking lever into a horizontal position.

The latch must engage in a recess on the fork carriage. It must not be possible to move the fork arm.

– Replace faulty fork latches.

Checking the reversible fork arms

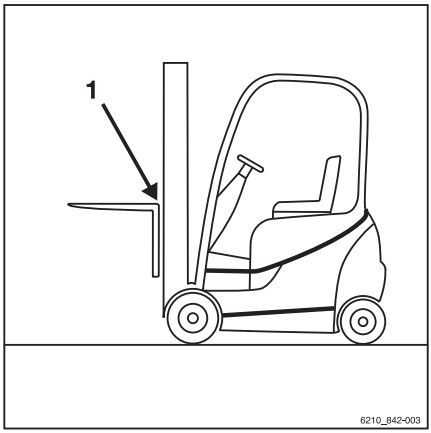

NOTE

This check is only required for reversible fork arms (variant).

– Check the outside of the fork bend (1) for cracks. Contact your service centre.

6

Technical data

Dimensions

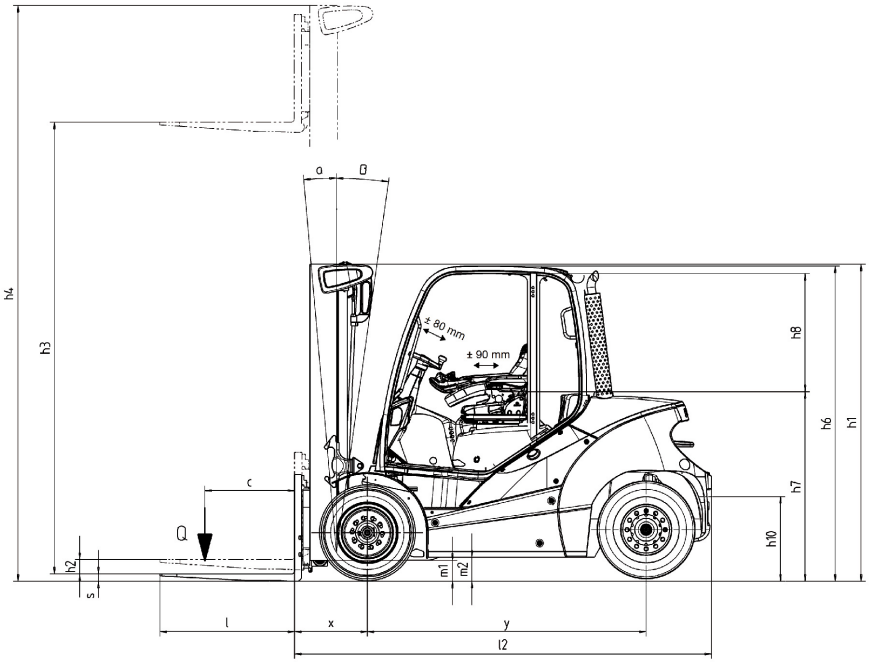

7331_003-009

- Steering column is adjustable ± 80 mm
- Seat is adjustable ± 90 mm
- Fork spacing is adjustable

NOTE

Measurements h_1, h_3, h_4, h_6 and b_1 are customised and can be found on the order confirmation.

Centre of gravity "S" (distance measured from the front axle)

NOTE

The centre of gravity "S" depends on the truck's individual equipment, e.g. the type of lift mast, any attachments or the driver protection structure. This can vary from one truck to another. If necessary, the centre of gravity "S" must be determined individually for each truck. Please contact the qualified service centre in relation to this matter.

VDI datasheet

NOTE

This VDI datasheet specifies only the technical values for trucks with standard equipment. Different tyres, lift masts, additional units etc. can produce different values.

Key data

		RX70-40	RX70-45	RX70-50	RX70 50/600
Manufacturer		STILL	STILL	STILL	STILL
Drive:		Diesel-electric	Diesel-electric	Diesel-electric	Diesel-electric
Operation:		Seat	Seat	Seat	Seat
Load capacity/load	Q (kg)	4000	4500	4999	5000
Load centre of gravity	c (mm)	500	500	500	600
Load distance	x (mm)	540	540	540	550
Wheelbase	y (mm)	2005	2005	2070	2125

Weight

		RX70-40	RX70-45	RX70-50	RX70 50/600
Net weight	kg	6075	6279	6590	7174
Front/rear axle load with load	kg	8896/1180	9632/1146	10468/1122	11014/1160
Front/rear axle load without load	kg	2821/3255	2798/3480	2956/3635	3308/3866

Wheels, chassis frame

		RX70-40	RX70-45	RX70-50	RX70 50/600
Tyres: superelastic (SE), solid rubber (V), pneumatic (L)		SE	SE	SE	SE
Front wheel size		250-15	355/45-15	355/45-15	355/45-15
Rear wheel size		250-15	250-15	250-15	250-15
Number of front/rear wheels (x = driven)		2x/2	2x/2	2x/2	2x/2
Track width: front single tyre	b 10 (mm)	1136	1210	1210	-

		RX70-40	RX70-45	RX70-50	RX70 50/600
Track width: front twin tyre	b 10 (mm)	1364	1364	1364	1364
Track width: rear	b 11 (mm)	1120	1120	1120	1120

Basic dimensions

		RX70-40	RX70-45	RX70-50	RX70 50/600
Lift mast/fork carriage tilt, forwards/backwards	Degrees	3/7	3/7	3/7	3/7
Height with lift mast retracted	h1 (mm)	2400	2400	2400	2400
Free lift	h2 (mm)	160	160	160	160
Lift height	h3 (mm)	3180	3180	3180	2980
Height with lift mast extended	h4 (mm)	4187	4187	4187	4137
Height above overhead guard	h6 (mm)	2300	2300	2300	2300
Seat height	h7 (mm)	1298	1298	1298	1298
Coupling height	h10 (mm)	496	496	496	496
Overall length	l1 (mm)	4027	4071	4198	4368
Length from Fork back	l2 (mm)	3027	3071	3098	3168
Overall width	b1	1380	1506	1506	1506
Fork arm dimensions	s/e/l (mm)	50/120/1000	50/120/1000	50/120/1000	50/150/1200
Fork carriage according to ISO 2328 class/form A, B		Category III / Form A	Category III / Form A	Category III / Form A	Category III / Form A
Fork carriage width	b3 (mm)	1310	1310	1410	1310
Ground clearance with load below lift mast	m1 (mm)	140	140	140	140
Ground clearance at the middle of the wheelbase	m2 (mm)	165	165	165	165
Aisle width for pallets 1000 x 1200 crosswise	Ast (mm)	4401	4441	4470	4539
Aisle width for pallets 800 x 1200 lengthwise	Ast (mm)	4601	4641	4670	4739

		RX70-40	RX70-45	RX70-50	RX70 50/600
Turning radius	Wa (mm)	2661	2701	2730	2789
Smallest pivot point distance	b13 (mm)	737	737	746	754

Performance data

		RX70-40	RX70-45	RX70-50	RX70 50/600
Driving speed with/without load	km/h	21/21	21/21	20/20	20/20
Lifting speed with/without load, min. fan speed	m/s	0.59/0.59	0.50/0.53	0.50/0.53	0.50/0.53
Lowering speed with/without load	m/s	0.50/0.50	0.50/0.50	0.50/0.50	0.50/0.50
Pulling force with/without load	N	22110/20010	22160/20130	22100/21830	22060/22150
Climbing capability with/without load	%	/>30	/>30	/>30	/>30
Acceleration time with/without load	s	5.2/4.7	5.5/4.8	5.9/4.9	6.2/5.0
Service brake		Mechanical	Mechanical	Mechanical	Mechanical

Motor

		RX70-40	RX70-45	RX70-50	RX70 50/600
Engine manufacturer/model		Deutz/ TCD 2.9 l	Deutz/ TCD 2.9 l	Deutz/ TCD 2.9 l	Deutz/ TCD 2.9 l
Engine power rating in accordance with ISO 1585	kW	54	54	54	54
Nominal speed	rpm	2200	2200	2200	2200
Maximum torque	Nm	260	260	260	260
Number of cylinders/displacement	cm^3	4/2900	4/2900	4/2900	4/2900
Fuel consumption in accordance with the VDI cycle	l/h	4.1	4.3	4.6	4.8

Other

		RX70-40	RX70-45	RX70-50	RX70 50/600
Type of traction controller		Still-tronic	Still-tronic	Still-tronic	Stilltronic
Working pressure for attachments	bar	250	250	250	250
Oil volume for attachments	l/min	30	30	30	30
Sound pressure level in driver's compartment[1]	dB(A)	< 75	< 75	< 75	< 75
Sound power level L_{WA} (working cycle)	dB(A)	106	106	106	106
Tow coupling, type/model		Bolt	Bolt	Bolt	Bolt

Wheels and tyres

Permissible tyres

⚠ DANGER

The use of non-permissible tyres affects the stability of the truck. Risk of accident!

- Only use the types of tyre listed below.
- Observe the basic principles of safe operation; see the chapter entitled "Tyres".

⚠ WARNING

Risk of tipping!

Tyre quality affects the stability of the truck.

If you wish to use a different type of tyre on the truck from the tyres approved by the truck manufacturer, or tyres from a different manufacturer, you must first obtain approval from the truck manufacturer.

⚠ WARNING

Risk to stability!

When using pneumatic tyres or solid rubber tyres, rim parts must never be changed and rim parts from different manufacturers must not be mixed.

- Consultation with the authorised service centre is recommended before changing over to wheels and tyres other than those specified here.

1 Without cab. Values are different with a cab.

RX70-40 tyres

Type of tyre	Tyre size		Track width (mm)		Lift mast (Overall height in mm)	
	Front	Rear	Front	Rear	Telescopic	Triple
Superelastic SIT tyres						
SIT	250-15	250-15	1136	1120	Up to 3250	Up to 3200
SIT	7.00-15	250-15	1369	1120	Up to 3250	Up to 3200
SIT	7.00-15	250-15	1369	1120	Up to 3250	Up to 3200
SIT	250-15	250-15	1136	1120	Up to 3250	Up to 3200
SIT	355/50-15	250-15	1210	1120	Up to 3250	Up to 3200
SIT	28x12.5–15	250-15	1210	1120	Up to 3250	Up to 3200
SIT	355/50-15	250-15	1210	1120	Up to 3250	Up to 3200
SITn	250-15	250-15	1136	1120	Up to 3250	Up to 3200
SITn	355/50-15	250-15	1210	1120	Up to 3250	Up to 3200
SITa	250-15	250-15	1136	1120	Up to 3250	Up to 3200
SITa	28x12.5–15	250-15	1210	1120	Up to 3250	Up to 3200
SITa	7.00-15/5.5	250-15	1364	1120	Up to 3250	Up to 3200
Pneumatic tyres						
Pneumatic 1136	250-15/18PR	250-15	1136	1120	Up to 3250	Up to 3200
Pneumatic 153 A5 XZM TL	250/70R15	250-15	1136	1120	Up to 3250	Up to 3200
Pneumatic 1364, twin tyres	7.00-15	250-15	1364	1120	Up to 3250	Up to 3200

RX70-45 tyres

Type of tyre	Tyre size		Track width (mm)		Lift mast (Overall height in mm)	
	Front	Rear	Front	Rear	Telescopic	Triple
Superelastic SIT tyres						
SIT	7.00-15	250-15	1369	1120	Up to 3250	Up to 3200
SIT	7.00-15	250-15	1369	1120	Up to 3250	Up to 3200
SIT	355/50-15	250-15	1210	1120	Up to 3250	Up to 3200
SIT	355/50-15	250-15	1210	1120	Up to 3250	Up to 3200
SIT	355/50-15	250-15	1210	1120	Up to 3250	Up to 3200
SITn	355/50-15	250-15	1210	1120	Up to 3250	Up to 3200
SITa	28x12.5–15	250-15	1210	1120	Up to 3250	Up to 3200

Type of tyre	Tyre size		Track width (mm)		Lift mast (Overall height in mm)	
	Front	Rear	Front	Rear	Telescopic	Triple
SITa	7.00-15/5.5	250-15	1364	1120	Up to 3250	Up to 3200
Pneumatic tyres						
Pneumatic 1364, twin tyres	7.00-15	250-15	1364	1120	Up to 3250	Up to 3200

RX70-50 tyres

Type of tyre	Tyre size		Track width (mm)		Lift mast (Overall height in mm)	
	Front	Rear	Front	Rear	Telescopic	Triple
Superelastic SIT tyres						
SIT	7.00-15	250-15	1369	1120	Up to 3250	Up to 3200
SIT	7.00-15	250-15	1369	1120	Up to 3250	Up to 3200
SIT	355/50-15	250-15	1210	1120	Up to 3250	Up to 3200
SIT	355/50-15	250-15	1210	1120	Up to 3250	Up to 3000
SIT	355/50-15	250-15	1210	1120	Up to 3250	Up to 3200
SITn	355/50-15	250-15	1210	1120	Up to 3250	Up to 3200
SITa	28x12.5–15	250-15	1210	1120	Up to 3250	Up to 3000
SITa	7.00-15/5.5	250-15	1364	1120	Up to 3250	Up to 3200
Pneumatic tyres						
Pneumatic 1364, twin tyres	7.00-15	250-15	1364	1120	Up to 3250	Up to 3200

RX70-50 tyres (LSP 600)

Type of tyre	Tyre size		Track width (mm)		Lift mast (Overall height in mm)	
	Front	Rear	Front	Rear	Telescopic	Triple
Superelastic SIT tyres						
SIT	7.00-15	250-15	1369	1120	Up to 3250	Up to 3200
SIT	7.00-15	250-15	1369	1120	Up to 3250	Up to 3200
SIT	355/50-15	250-15	1210	1120	Up to 3250	Up to 3200
SIT	355/50-15	250-15	1210	1120	Up to 3250	-
SIT	355/50-15	250-15	1210	1120	Up to 3250	Up to 3200
SITn	355/50-15	250-15	1210	1120	Up to 3250	Up to 3200
SITa	28x12.5–15	250-15	1210	1120	Up to 3250	-

Type of tyre	Tyre size		Track width (mm)		Lift mast (Overall height in mm)	
	Front	Rear	Front	Rear	Telescopic	Triple
SITa	7.00-15/5.5	250-15	1364	1120	Up to 3250	Up to 3200
Pneumatic tyres						
Pneumatic 1364, twin tyres	7.00-15	250-15	1364	1120	Up to 3250	Up to 3200

Fuse assignment

▷

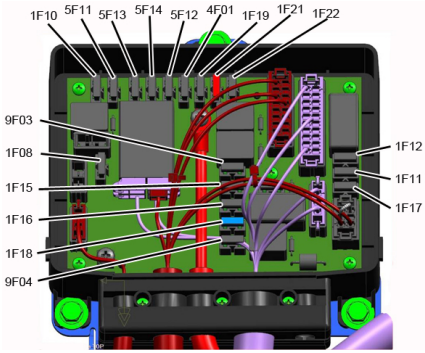

Fuse		Connection	Comment
1F08	10 A	12-volt battery (constant positive terminal)	Reserve
1F09	10 A	Switch lock, terminal 30	
1F10	10 A	Coolant pump	RX70-40-50 (LPG)
1F11	10 A	Converter	
1F12	15 A		Reserve
1F15	10 A	12 volts for TCU, display and operating unit	
1F16	10 A	12 volts for servo hydraulics	
1F17	10 A	Time-delay relay, terminal 15	
1F18	15 A	Converter coolant pump, axle/converter	
1F19	10 A	12 volts for ECU	VW ECU
	10 A	Exhaust gas volume controller	RX70-40-50 (DOC, DPF)
1F21	10 A	Burner air pump, preheating control unit, exhaust gas recirculation	RX70-60-80
	15 A	Lambda probe, ignition module 1-3 pulse valve	RX70-40-50 (LPG)
	10 A	Exhaust gas controller butterfly valve	RX70-40-50 (DOC)
1F22	15 A	Spark ignition control unit	RX70-60-80
	15 A	Pulse valve, ignition module 4-6	RX70-40-50 (LPG)

Fuse		Connection	Comment
4F01	10 A	Signal horn	
5F11	30 A	CPP1 (roof)	
5F12	20 A	CPP2b (lighting)	
5F13	30 A	CPP3 (seat)	
5F14	20 A	12 volts for ECU	Deutz ECU
9F03	10 A	12 volts for Option Board	
9F04	20 A	Starter terminal 50	RX70-40-50 (LPG)
	30 A	Fuel pump	RX70-40-50 (DOC, DPF)

NOTE

Depending on the equipment, not all fuses will be present in the truck.

A

Access authorisation
- Changing the password. 89
- Defining the driver PIN. 85
- Entering the access code. 84
- Selecting the driver PIN. 87

Access authorisation with PIN code. 82
Accessories
- Overview. 7

Actuating the drive direction switch
- Fingertip version. 133
- Joystick 4Plus version. 132
- Mini-lever version. 133
- Travel direction selector and indicator module version. 134

Address of manufacturer. I
Adjusting the armrest. 80
Adjusting the fork. 180
Adjusting the steering column. 81
After washing. 303
Aisle widths. 129
Attachments
- Assembling. 201
- Controlling using a double mini-lever. 207
- Controlling using a quadruple mini-lever. 214
- Controlling using a triple mini-lever. . 211
- Controlling using the double mini-lever and the 5th function. 209
- Controlling using the joystick 4Plus. . 219
- Controlling using the quadruple mini-lever and the 5th function. 217
- Controlling using the triple mini-lever and the 5th function. 213
- Controlling with the fingertip. 222
- Controlling with the fingertip and the 5th function. 224
- General controlling. 205
- Load pick up. 226
- Mounting. 203
- Releasing the pressure from the connections. 203
- Special risks. 35

Automatic lift cut out. 147
Automatic mast vertical positioning. 148
- Approach to the end stops. 150
- Automatic movement. 150
- Calibrate. 152
- Description. 148
- Display. 149
- Possible restrictions. 151
- Tilting the lift mast backwards. 151
- Tilting the lift mast forwards. 150

Automatic tow coupling. 248
- Coupling RO*243. 250
- Coupling RO*244 A. 252
- Coupling RO*245. 254
- Coupling RO*841. 255
- Uncoupling RO*243. 251
- Uncoupling RO*244 A. 253
- Uncoupling RO*245. 255
- Uncoupling RO*841. 256

B

Basic principles for safe operation. 27
Battery
- Charging. 347
- Checking the charge status. 346
- Disposal. 21
- Servicing. 346

Battery acid. 47
Before picking up a load
- Capacity rating plate. 172

Blue-Q
- Configure. 111
- Functional description. 124
- Switching off. 126
- Switching off additional consumers. . 125
- Switching on. 126

Blue-Q efficiency mode. 124
Bottom plate
- Installing. 331
- Removing. 329

C

Cab
- Operating the interior lighting. 241
- Operating the rear window heating. . . 242

Capacity rating plate. 172
Ceiling sensor. 232
Changes to the truck. 27
Changing the drive direction. 135
- Dual pedal version. 138

Changing the fork arms. 166

Changing the password. 89
Checking the coolant concentration. 332
Checking the door latch. 339
Checking the driver's seat. 341
Checking the emergency off function. . . . 98
Checking the engine oil level. 332
Checking the fork arms. 354
Checking the lift cylinders and connections for leaks. 353
Checking the side cover is locked. 74
Checking wheel fastenings. 346
Clamp locking mechanism. 225
Releasing the mechanism with a double mini-lever. 208
Releasing the mechanism with a quadruple mini-lever. 216
Releasing the mechanism with a triple mini-lever. 212
Releasing the mechanism with the fingertip. 223
Releasing the mechanism with the joystick 4Plus. 220
Cleaning the dust valve. 101
Cleaning the electrical system. 302
Cleaning the windows. 303
Climbing into the truck. 71
Climbing out of the truck. 71
Closing the bonnet. 328
Closing the cab door. 239
Closing the side windows. 240
Conformity marking. 5
Consumables. 45
Coolant and cooling fluid safety information. 50
Disposal. 50
Safety information for diesel fuel. 48
Safety information for handling battery acid. 47
Safety information for handling oils. . . 45
Safety information for hydraulic fluid. . 46
Contact details. I
Coolant. 332
Topping up. 332
Coolant and cooling fluid. 50
Copyright and trademark rights. 16
Coupling pin in the counterweight. 246
Coupling. 246
Uncoupling. 247
Crane loading. 296
Determining the loading weight. 297
Hooking on the lifting straps. 297
Cruise control. 228

D

Damage. 30
Danger area. 180
Danger to employees. 40
Declaration of conformity. 6
Decommissioning
Recommissioning. 305
Defects. 30
Defining the driver PIN. 85
Definition of directions. 19
Definition of terms used for responsible persons. 24
Determining visibility conditions when driving with a load. 188
Diesel engine emissions
Checking. 42
Diesel fuel. 48
Filling up. 281
Non-road fuels. 280
Specifications. 278
Sulphur content. 279
Winter operation. 280
Dimensions. 356
Display and operating unit. 58
Additional indicators. 102
Adjusting the displays. 103
Configure Blue Q. 111
Standard display elements. 102, 114
Display messages
Display content. 258
Drive-specific. 271
General. 261
Display operating unit
Additional settings. 112
Resetting the daily kilometres. 109
Setting the date. 109
Setting the language. 110
Setting the time. 109

Display symbols. 104
Auxiliary equipment softkey functions. 106
Error messages. 106
Menu navigation softkey functions. . . 107
Numeric keypad. 107
Operating messages. 105
Status LEDs. 107
Warning messages. 105
Disposal
Battery. 21
Components. 21
Documentation scope. 14
Double mini-lever
Lifting/lowering the fork carriage. 157, 158
Tilting the lift mast. 157, 159
Drive lighting
Switching on and off. 117
Driver rights, duties and rules of behaviour. 25
Drivers. 25
Driver's cab
Use. 95
Driving. 127
Ascending gradients. 143
Descending gradients. 143
Driving on gradients. 129
Driving on lifts. 191
Driving on loading bridges. 192

E

EC declaration of conformity in accordance with the Machinery Directive. 6
Emergencies
Disconnecting the battery. 290
Truck tipping over. 285
Using the emergency hammer. 285
Emergency drive direction. 286
Emergency driving. 286
Emergency hammer. 285
Emergency lowering. 288
Emergency shutdown. 283
Emissions. 52
Diesel engine emissions. 53
Exhaust gases. 53
Heat. 53
Noise emissions. 52
Vibrations. 52
Entering the access code. 84
Environmental considerations. 21
Error code table. 259

F

Filling the washer system. 227
Fingertip
Lifting/lowering the fork carriage. 164
Tilting the lift mast. 165
Fitting attachments. 201
FleetManager. 228
Shock recognition. 112, 228
Foreword. 0
Fork arms
Length. 30, 33
Fork extension. 168
Fork wear protection. 165
Fuel filter
Draining water from. 337
Function checking. 68

G

Gas spring with position lock (variant)
Releasing the latch. 329
General. 4

H

Handling gas springs and accumulators. . 32
Handling loads. 172
Hazards and countermeasures. 38
Hazard warning system. 119
Heating system. 243
Adjusting the air flow. 244
Switching on the blower. 243
Hydraulic blocking function. 154
Hydraulic fluid. 46
Hydraulic system
Checking for leak tightness. 352
Checking the oil level. 351

I

Improper use. 11
Information about the documentation. . . . 14
Information for carrying out maintenance. 312
Maintenance timeframe. 313
Inserting wedges. 295
Insulation testing. 44
Insurance cover on company premises. . . 27
Intended use. 11

Interior lighting. 241

J

Jacking up. 310
Joystick 4Plus. 63
Fork carriage sideshift. 163
Lifting/lowering the fork carriage. 162
Tilting the lift mast. 162
Jump-starting. 291

L

Labelling points
Overview. 8
Lashing down. 295
Lift cut out
Automatic. 147
Lifting. 147, 310
Lifting system
Controlling using a double mini-lever. 156
Controlling using a quadruple mini-lev-er. 160
Controlling using a triple mini-lever. . 158
Controlling using the joystick 4Plus. . 161
Controlling with the fingertip. 164
Operating devices. 155
Lift mast
Lubricating the roller track. 349
Removing. 311
Securing against falling off. 311
Securing against tilting backwards. . . 311
Lift mast versions
Triplex lift mast. 153
Lighting
STILL SafetyLight. 122
Switching on and off. 117
List of abbreviations. 17
Load
Picking up. 183
Setting down. 189
Transporting. 187
Load chains
Cleaning. 302
Load measurement. 177
Description. 177
Procedure. 177
Zero adjustment. 99
Lubricating the joints and controls. 338

M

Maintenance. 0
General information. 312
Safety regulations. 308
Maintenance data table
Actuators/joints. 322
Air conditioning. 324
Battery. 322
Cooling system. 324
Drive axle. 323
Electrical system. 322
Engine. 324
Fuel tank. 324
General lubrication points. 322
Hydraulic system. 322
Lift mast. 323
Load chains. 323
Steering axle. 323
Tyres. 322
Washer system. 324
Maintenance work without special qualifi-cations. 312
Malfunctions during lifting mode. 153
Measuring the insulation resistance of the electrical system. 44
Medical equipment. 32
Message
ACCELERATOR. 263
ADBLUE FILLING LEVEL. 272
ADBLUE QUALITY. 272
ADBLUE QUALITY URGENT!. 273
ADBLUE REFILL 5l. 272
ADBLUE URGENT!. 272
AIR FILTER. 275
ALTERNATOR. 275
APPLY HANDBRAKE. 262
ASH LOAD. 273
AUXILIARY1 LEVER. 264
AUXILIARY2 LEVER. 264
BRAKE SENSOR. 263
CODE DENIED. 263
COOLANT LEVEL. 274
CUTOUT MODE. 272
DRIVE DIRECTION EMERGENCY OP-ERATION. 265
EMERGENCY OFF SWITCH. 265
EMPTY. 274

EXH.GAS PURIFIER. 271
EXH.GAS PURIFIER PLEASE WAIT. 271
EXH.GAS PURIFIER SERVICE! ! !. . 271
FUEL FILTER. 274
GLOW. 273
HYBRID SYSTEM. 273
HYDRAULIC PUMP. 274
LOWER FORKS. 264
LOWER LEVER. 264
LPG AUTO. VALVE. 275
NOT VALID. 271
OIL PRESSURE. 276
OVERHEATING. 270
PARKING BRAKE ACTIVE. 263
PARKING BRAKE: APPLY HAND-BRAKE!. 264
PARK. REG. ERROR. 277
PARK. REG. URGENT! ! !. 276
REFERENCE CYCLE. 266
REGENERATION COMPLETED. . . . 276
RELEASE PARKING BRAKE. 263
SAFETY BELT. 267
SCR-SYSTEM MALFUNCTION. 276
SCR-SYSTEM SERVICE. 276
SEAT SWITCH. 268
SECURE TRUCK AGAINST ROLLING AWAY. 268
SERVICE BRAKE. 262
START IC ENGINE. 277
START PARK. REG.?. 277
STEERING. 265
SURVEILLANCE. 270
SWITCH OFF TRUCK?. 263
TILTING SPEED. 265
TILT LEVER. 264
? VERTICAL POSITION. 266
Messages
Drive-specific. 271
General. 261
Misuse of safety systems. 30
MSG 65/MSG 75 driver's seat
Adjusting. 75
Adjusting the backrest extension. 79
Adjusting the lumbar support. 78
Adjusting the seat backrest. 76
Adjusting the seat suspension. 77
Moving. 76
Switching the seat heater on or off. . . . 79

N

Nameplate. 9

O

Oils. 45
Opening the bonnet. 326
Opening the cab door. 238
Opening the side windows. 239
Operating company. 24
Operating devices and display elements. . 58
Operating devices for hydraulic and driving functions. 59
Double mini-lever. 60
Fingertip. 64
Quadruple mini-lever. 62
Triple mini-lever. 61
Operating instructions
Issue date. 16
Operating material
Maintenance data table. 322
Operating materials
Quality and quantity. 320
Operating procedures. 20
Operating the display-operating unit. . . . 102
Operating the service brake. 138
Operating the signal horn. 92
Operation. 0
Ordering spare parts and wearing parts. 319
Overhead guard
Drilling. 28
Roof loads. 28
Welding. 28
Overview
Driver's compartment. 57
Truck. 56
Overviews. 0

P

Packaging. 21
Parked regeneration
Interruption. 194
Performing. 195
Parking brake
Mechanical parking brake. 140
Parking the truck securely. 145

Particle filter
Displays. 199
Function. 193
Low-load operation. 193
Normal operation. 193
Operational requirements. 43
Standstill regeneration. 195
Personnel qualifications. 312
Picking up loads. 179
Place of use. 12
Procedure if truck tips over. 285
Procedure in emergencies. 283
Prohibition of use by unauthorised persons. 26

Q

Quadruple mini-lever
Lifting/lowering the fork carriage. 160
Tilting the lift mast. 161

R

Radiator
Checking for leaks. 335
Cleaning. 335
Radio. 242
Rear window heating. 242
Recommissioning after decommissioning. 305
Reducing speed with a raised load. 144
Refuelling. 278
Replacing fuses. 348
Resetting the daily kilometres. 109
Resetting the daily operating hours. 109
Residual dangers. 34
Residual risk. 34
Residual risks. 34
Retrofitting. 27
Reversible fork arm
Checking. 354
Reversible fork arms. 170
Roadways. 129
Condition. 130
Dimensions of aisle widths. 129
Dimensions of roadways. 129
Driving on gradients. 129
Hazard areas. 131
Rules for roadways and the working area. 131
Rotating beacon. 120

S

Safety. 0
Safety devices. 310
Safety inspection. 42
Safety regulations
Consumables. 45
Safety regulations for maintenance
General information. 308
Safety devices. 310
Set values. 310
Working on the electrical equipment. 309
Working on the hydraulic equipment. 308
Working on the ignition system. 309
Safety regulations for working on the lift mast. 310
Safety regulations when driving. 127
Safety regulations when handing loads. . 172
Safety tests. 42
Schematic views. 20
Scope of the documentation
CO solutions. 15
Seat belt. 92
Checking. 340
Cleaning. 340
Fastening. 93
Fastening on a steep slope. 94
Maintaining. 339
Malfunction due to cold weather conditions. 94
Releasing. 94
Replacing after an accident. 340
Selecting the driver PIN. 87
Serial number. 9
Setting the date. 109
Setting the drive programmes. 131
Setting the language. 110
Setting the time. 109
Set values. 310
Shock recognition. 112, 228
Shutting down the truck. 304
Side service flap
Closing. 326
Opening. 325
Signal terms. 17
Spare parts list. I
Special risks. 35
Stability. 35

Starting drive mode
Dual pedal version. 136
Starting the engine. 115
Starting to drive. 134
Status LEDs. 107
Steering. 142
Steering system
Checking for correct function. 98
Storing the truck. 304
StVZO (Road Traffic Licensing Regulations) information. 10
Switching off the
air conditioning. 244
Switching off the truck. 145
Switching on the
air conditioning. 244
heating system. 243
Switching on the key switch. 113

T

Technical data. 0
Dimensions. 356
Towed load. 245
Towing. 292
Proper use. 11
Trailer operation. 245
Trailers
Towing. 256
Transport. 294
Transporting pallets. 181
Transporting suspended loads. 182
Travel direction selector and indicator module. 65
Turn indicators. 118
Types of lift mast. 152
Telescopic mast. 152
Tyres
Safety principles. 31

U

Unlocking the emergency off switch. 81
Using the truck. 11
Using working platforms. 13

V

Variant
Ceiling sensor. 232
Variants
Access authorisation with PIN code. . . 82
Automatic lift cut out. 147
Automatic mast vertical positioning. . 148
Automatic shut-off of the internal combustion engine. 144
Clamp locking mechanism. 225
Cruise control. 228
Emergency off switch. 81
FleetManager. 228
Fork extension. 168
Fork wear protection. 165
Gas spring with position lock. 329
Lifting systems. 147
Load measurement. 177
Radio. 242
Reducing speed with a raised load. . . 144
Reversible fork arms. 170
Shock recognition. 112, 228
Travel direction selector and indicator module. 65
Triplex lift mast. 153
Wheel chock. 146
Windscreen wiper/washer. 227
Zero braking. 139
Vertical lift mast position
Checking for correct function. 101
View of functions and operations. 20
View of operating procedures. 20
Views of the display operating unit. 20
Visual inspections. 68

W

Warning regarding non-original parts. . . . 29
Wheel chock. 146
Wheels and tyres
Checking condition and wear of the tyres. 344
Checking the air pressure. 345
Checking wheel fastenings. 346
Servicing. 344
Technical data. 361
Windscreen wiper/washer. 227
Working at the front of the truck. 310
Working on the electrical equipment. . . . 309
Working on the hydraulic equipment. . . . 308
Working on the ignition system. 309

Working spotlight
Switching on and off. 117
Working spotlight for reverse travel
Switching on and off. 118
Working spotlights
Automatically switching on/off. 121
Lift-height-controlled switching on/off. 122
Manually switching on/off. 120
Switching on and off. 120

Y

Your truck. 2

Z

Zero adjustment of the load measurement. 99