Original instructions

LPG forklift truck

RCG15
RCG18
RCG20

4214 4215 4216

first in intralogistics

60048011601 EN - 04/2023 - 08

Address of manufacturer and contact details ▷

STILL GmbH
Berzeliusstraße 10
22113 Hamburg, Germany
Tel. +49 (0) 40 7339-0
Fax: +49 (0) 40 7339-1622
Email: info@still.de
Website: http://www.still.de
Produced in China for STILL

Rules for the operating company of industrial trucks

In addition to these operating instructions, a code of practice containing additional information for the operating companies of industrial trucks is also available.

This guide provides information for handling industrial trucks:

- Information on how to select suitable industrial trucks for a particular area of application
- Prerequisites for the safe operation of industrial trucks
- Information on the use of industrial trucks
- Information on transport, initial commissioning and storage of industrial trucks

Internet address and QR code ▷

The information can be accessed at any time by pasting the address **https://m.still.de/vdma** in a web browser or by scanning the QR code.

1 Introduction

General information 2
Truck data 2
Intended use 3
Improper use 4
Description of use and climatic conditions 5
Modifications to the truck 5
Symbols used 5
Conformity marking 6
EMC – Electromagnetic compatibility 7
Declaration that reflects the content of the declaration of conformity 8

2 Safety

Regulations 12
Safety regulations 13
Safety guidelines 13
Exhaust gases 15
Definition of terms used for responsible persons 16
Operating company 16
Specialist 16
Competent person 16
Drivers 17
Ground condition for using the truck 17
Safety Regulations Relative to Forklift Use 18
Carrying out regular inspections on the truck 19
Improper use 19
Hazard assessment 21
Residual risks 22
Stability 22
In the case of tip-over 23
Safety regulations when driving 24
Safety regulations in case of accidental lateral tipping 25
Commissioning of LPG-fuelled trucks 25

General safety rules for liquid gas 26

Exercise caution when handling gas springs and accumulators 28

Safety regulations for handling consumables 29
Permissible consumables 29
Oils 30
Hydraulic fluid 31
Battery acid 31
Disposal of consumables. 32

Environmental considerations 33
Handling consumables 33
Disposing of components and batteries 33
Packaging 34

Safety instructions for the LPG system 34

Safety information on the LPG system 35

Emissions 35

Fitting attachments 36

The emergency exit of the cab 38

Manually lowering the fork arms with ISO 38

Safety tests 39
Carrying out regular safety inspections on the LPG system 39

3 Information about the truck

General forklift view 42
General front view 42
General rear view 43

Instrumentation and controls 44
Overview of the driver's compartment 44
Display unit 45

Truck identification 46
Chassis number. 46
Serial number 46
Nameplate 46
UK-Importer 47
Engine plate. 48
Three-way catalytic converter plate 49

Location of the decals 50

4 Use and Operation

Truck transport and lifting 54
Removing the mast 54
Use a truck or flatbed trailer to carry the forklift truck 54
Environmental conditions for transport and storage 55
Loading and unloading the truck 55
Commissioning the truck 57

Remaining ready for operation 58
Pre-shift checks 58
Checking the cap on the high-pressure relief valve on the outside of the LPG system . 59
Daily checks before use 59
Seat belt status and performance checks 61
Checking the condition of the tyres 62
Check the wheel nuts for correct condition 63
Check the condition and operation of chain 64
Check the coolant level 65
Check the engine oil level 67
Check the brake fluid level 68
Transmission oil level inspection procedure 69
Checking the drive axle gearbox oil. 69
Checking the hydraulic oil level 70

Change the LP-gas tank 70

Fill the LPG tank* 73

Fuel- LPG(liquefied gases) 75

Engine coolant specifications 75

Using the truck 77
Opening the tap of the gas bottle or gas tank 77
Opening the gas cylinder or LPG tank* shutoff valve 77
Climbing on/off the forklift 78
Seat belt and performance checks 78
Adjusting the seat and seat belt 79
Fastening the seat belt 80
Seat belt monitoring and alarm function 83
Adjusting the steering column 83
Ignition device 84
Lighting and turn indicator switch 84
Warning horn; 86
Direction selection lever 86
Start the engine 86
Driving 87

Changing direction of travel . . . 90
Driving brake pedal and inching pedal . . . 91
Operating the service brake . . . 91
Parking brake . . . 92
Closing the gas cylinder or LPG tank* shutoff valve . . . 93

Lifting system and attachments . . . 94
Operating the lifting device . . . 94
Operating attachments . . . 95

Handling loads . . . 97
Safety regulations when handing loads . . . 97
Load centre distance and load capacity . . . 97
Capacity Chart . . . 98
Before lifting a load . . . 99
Transporting pallets . . . 99
Danger area . . . 99
Transporting suspended loads . . . 100
Adjusting the fork arm distance . . . 102
Picking up a load . . . 103
Transporting loads . . . 107
Driving on ascending and descending gradients . . . 110
Driving on lifts . . . 111
Transport of swinging loads . . . 112
Driving on loading bridges . . . 113
Setting down loads . . . 114

Towed load . . . 116

Forklift towing . . . 117

Leaving the truck temporarily . . . 117

Leaving the truck . . . 118

Truck storage . . . 120
Truck Storage . . . 120
Disposal of old trucks . . . 122

Cleaning . . . 123
Cleaning the truck . . . 123
Cleaning the electrical system . . . 125
Lubricate the lift mast and chains with chain spray . . . 126
After washing . . . 127

Decommissioning . . . 128
General information . . . 128
Measures to be implemented when decommissioning . . . 128

Recommissioning after storage . . . 129
Permanent decommissioning (scrapping) . . . 130

5 Maintenance

General information . . . 132

Personnel qualifications . . . 133

Preliminary maintenance operations . . . 133

Scheduled truck maintenance . . . 135
Maintenance — 500 hours . . . 135
Maintenance — 1000 hours/annually . . . 137
Maintenance - 3000 hours . . . 140
Supply table . . . 143

Providing access to maintenance points . . . 144
Opening the bonnet . . . 144
Closing the bonnet . . . 145
Installing and removing the bottom plate . . . 146

Maintenance service . . . 148
Changing the engine oil . . . 148
Replacing the engine oil filter . . . 150
Replacement of Coolant . . . 151
Cleaning the radiator, checking for leaks . . . 153
Clean the air filter . . . 154
Change the air filter . . . 155
Check the belt and replace the belt . . . 157
Changing the hydraulic transmission crude oil filter . . . 158
Replacing the fine hydraulic transmission oil filter . . . 159
Changing the oil of the hydraulic transmission . . . 160
Changing the drive axle gearbox oil . . . 161
Wheel replacement procedure . . . 162
Change brake system liquid . . . 164
Fill up the hydraulic oil . . . 164
Checking the hydraulic oil level . . . 164
Changing the suction filter . . . 165
Replacing the breather filter . . . 166
Removing the forks . . . 167
Fitting the forks . . . 167
Checking the fork arms for wear and deformation . . . 168
Checking the operation and installation of the lift mast, lifting chain and limit block . . . 169
Lubricate the lift mast and chains with chain spray . . . 169
Lubricating the lift mast and tilt cylinder bearings . . . 170

Adjusting the length of the lift chains, and lubricating using chain spray. 172
Checking the structure of the overhead guard 173

6 Technical datasheet

Dimensions 176
VDI Datasheet for RCG15 177
VDI Datasheet for RCG18 180
VDI Datasheet for RCG20 182
Mast specifications 184

Annex

7 Diagrams

Electric schematic diagram for DEUTZ G2.2 engine—with ISO3691 function 194
Hydraulic diagram 195
Brake diagrams 196

1

Introduction

General information

The truck described in these operating instructions corresponds to the applicable standards and safety regulations.

The truck has been fitted with advanced technology. Following these operating instructions will allow the truck to be handled safely. By complying with the specifications in these operating instructions, the functionality and the approved features of the truck will be retained.

These operating instructions provide the necessary information and help to avoid accidents and to keep the truck ready for operation beyond the warranty period.

Therefore:

- Read the operating instructions before commissioning the truck and follow the instructions during operation.
- Follow all of the safety information contained in the operating instructions and on the truck.

Operating on public roads

If the truck is to be operated on public roads, the truck must conform to the national regulations for the country in which it is being used. The required operating permit must be obtained from the relevant authorities.

Insurance cover on company premises

In many cases, company premises are restricted public traffic areas.

NOTE

It is advisable to review the company liability insurance to ensure that insurance covers the industrial truck with respect to third parties in the event of damage caused in restricted public traffic areas.

Truck data

We recommend that you record all basic forklift truck data in the following table so that it is available if required by the sales network or authorised service centre.

Type	
Serial number	
Date of delivery	

Intended use

The industrial truck may be used only for its intended purpose.

The industrial truck is intended for moving and lifting the loads specified on the capacity rating plate while observing the instructions given in these operating instructions.

Damage and faults

Damage or other faults on the industrial truck or the attachment must be immediately reported to supervisory personnel. Industrial trucks and attachments that are not operationally safe must not be used until they are properly repaired.

Do not remove or deactivate safety systems and switches. Fixed set values may only be changed with the approval of the manufacturer.

Danger area

The danger area is the area within which people may be at risk due to the movements of the industrial truck, its working equipment, its lifting accessories (e.g. attachments) or the goods that are carried. This also includes the area that can be affected by falling cargo or by lowering or falling working equipment.

People must not stand in the danger area of an industrial truck.

Working area

It is only permitted to drive on routes authorised for traffic by the operating company or its representatives. Traffic routes must be free from obstacles. Loads may only be set down and stored in the relevant areas provided for this purpose.

Roadways

Roadways must be sufficiently firm, level and free from objects. Drainage channels, level crossings and similar obstacles must be evened out and, if necessary, ramps must be provided so that trucks can drive over these obstacles with as few bumps as possible.

Industrial trucks may only be used on roadways that do not have curves that are too sharp, gradients that are too steep or entrances that are too narrow or low.

Gradients may not exceed the values given in the operating instructions and must have a sufficiently rough surface. The top and bottom of the gradient must feature smooth and gradual transitions to prevent the load from scraping the ground and the undercarriage from being damaged.

The permitted area load and point load of the roadways must not be exceeded. There must be sufficient distance between the highest points of the industrial truck or the load and the fixed points of the surroundings.

Within the EU, the applicable version of directive 89/654/EEC (minimum safety and health requirements for the workplace) must be observed. The respective national guidelines apply for areas outside the EU.

Hazardous areas on roadways must be safeguarded or indicated by the standard road traffic signs and, if applicable, by additional warning signs.

When driving on public roads, the national regulations pertaining to drivers and industrial trucks must be observed. Observe country-specific restrictions for winter road conditions.

Fire protection

The operating company must ensure that suitable fire protection is available for the relevant application in the surroundings of the industrial truck. Depending on the application, additional fire protection on the industrial truck may be necessary. If in doubt, the responsible fire brigade can be contacted.

Attachments

Attachments may only be used for their intended purpose. Drivers must be taught how to operate the attachments.

Attachment operating instructions are enclosed for industrial trucks that are delivered from the factory with an attachment. Before commissioning an industrial truck with an attachment, check that loads are handled safely. Depending on the type of attachment, it may be necessary to make adjustments, e.g. pressure settings or adjusting stops and operating speeds. Corresponding instructions can be found in the operating instructions for the attachment.

If attachments are not supplied with the industrial truck, the specifications of the industrial truck manufacturer and the attachment manufacturer must be observed.

Mounting the attachment and connecting the energy supply for power-driven attachments must only be performed by authorised personnel in accordance with the information provided by the manufacturers. After each assembly process, the function of the attachment must be checked prior to initial commissioning.

The permissible load capacity of the attachment and the permissible load (load capacity and load moment) of the industrial truck must not be exceeded by the combination of attachment and payload; see additional capacity rating plate.

Modifications, in particular attachments or conversions, are not permitted to be made to the industrial truck without the manufacturer's approval.

Improper use

The operating company or driver, and not the manufacturer, is liable for any hazards caused by improper use.

NOTE

Please note the definition of the following responsible persons: "operating company" and "driver".

Use for purposes other than those described in these operating instructions is prohibited.

DANGER

There is a risk of fatal injury from falling off the truck while it is moving!

– It is prohibited to carry passengers on the truck.

The truck may not be operated in areas where there is a risk of explosion, in areas that cause corrosion or in areas that are particularly dusty.

Stacking or unstacking on inclined surfaces or ramps is not permitted.

Description of use and climatic conditions

- Indoor and outdoor use
- Ambient temperature of -20°C ~ +40°C
- Use at up to 2000 metres above sea level
- Standardised degrees of protection provided by the enclosure of the electrical equipment: IP20.

Modifications to the truck

Unauthorised truck modification is not permitted.

Only in the event that the truck manufacturer is no longer in business and there is no successor in the interest to the business, may the user arrange for a modification or alteration to a powered industrial truck, provided, however, that the user

– arranges for the modification or alteration to be designed, tested and implemented by an engineer(s) expert in industrial trucks and their safety,

– maintains a permanent record of the design, test(s) and implementation of the modification or alteration,

– approves and makes appropriate changes to the capacity plate(s), decals, tags and instruction handbook, and

– affixes a permanent and readily visible label to the truck stating the manner in which the truck has been modified or altered, together with the date of the modification or alteration and the name and address of the organization that accomplished those tasks.

Symbols used

The terms DANGER, WARNING, CAUTION, NOTE and ENVIRONMENT NOTE are used in these operating instructions. They are intended to draw attention to specific dangers or unusual information that needs to be highlighted:

⚠ DANGER

Means that failure to comply can risk the lives of others and/or cause major damage to equipment.

⚠ WARNING

Means that failure to comply can result in the risk of serious physical injury and/or major damage to equipment.

⚠ CAUTION

Means that failure to comply can result in the risk of major damage to equipment or destruction.

NOTE

This means that particular attention must be paid to the specific technical meaning because this may not be obvious, even to a specialist.

ENVIRONMENT NOTE

The instructions listed here must be complied with otherwise environmental damage may result.

⚠ CAUTION

This label is found on the truck in the areas where particular care and attention are required from the operator.

Refer to the appropriate section in these operating instructions.

For your safety, additional symbols are also used. Please take these different symbols into consideration.

Conformity marking

The manufacturer uses the conformity marking to document the conformity of the industrial truck with the relevant directives at the time of placing on the market:

- CE: in the European Union (EU)
- UKCA: in the United Kingdom (UK)
- EAC: in the Eurasian Economic Union

The conformity marking is applied to the nameplate. A declaration of conformity is issued for the EU and UK markets.

An unauthorised structural change or addition to the industrial truck can compromise safety, thus invalidating the declaration of conformity.

▷

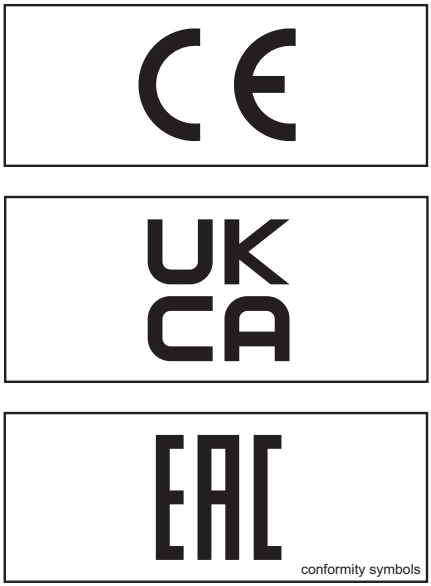

conformity symbols

EMC – Electromagnetic compatibility

Electromagnetic compatibility (EMC) is a key quality feature of the truck.

EMC involves

- limiting the emission of electromagnetic interference to a level that ensures the troublefree operation of other equipment in the environment.
- ensuring sufficient resistance to external electromagnetic interference so as to guarantee proper operation at the planned usage location under the electromagnetic interference conditions to be expected there .

An EMC test thus firstly measures the electromagnetic interference emitted by the truck and secondly checks it for sufficient resistance to electromagnetic interference with reference to the planned usage location . A number of electrical measures are taken to ensure the electromagnetic compatibility of the truck .

⚠ CAUTION

The EMC regulations for the truck must be observed.

When replacing truck components the protective EMC components must be installed and connected again.

Declaration that reflects the content of the declaration of conformity

Declaration

STILL GmbH
Berzeliusstraße 10
22113 Hamburg Germany

We declare that the specified machine conforms to the most recent valid version of the directives specified below:

Industrial truck type	**corresponding to these operating instructions**
Model	**corresponding to these operating instructions**

– "Machinery Directive 2006/42/EC" [1]
– "Supply of Machinery Safety Regulations 2008, 2008 No. 1597" [2]

Personnel authorised to compile the technical documents:

See declaration of conformity

STILL GmbH

The declaration of conformity document is supplied with the industrial truck. The declaration shown explains the conformity with the provisions of the EC Machinery Directive and the Supply of Machinery Safety Regulation 2008, 2008 No. 1597.

An unauthorised structural change or addition to the industrial truck can compromise safety, thus invalidating the declaration of conformity.

The declaration of conformity must be carefully stored and made available to the responsible authorities if necessary. It must also be

1 For the markets of the European Union, the EU candidate countries, the EFTA States and Switzerland

2 For the United Kingdom market

handed over to the new owner if the industrial truck is sold on.

Declaration that reflects the content of the declaration of conformity

2

Safety

Regulations

Regular safety inspection

Periodic safety inspections are essential to keep your truck safe and in good working order.

Europe: National laws based on Directives 95/63/EC, 99/92/EC and 2001/45/EC require that the truck is checked regularly by a competent person to ensure that it is in good condition.

Germany: Ordinance on Industrial Safety and Health (BetrSichV).

China: National Standard GB 10827.1-2014 of the People's Republic of China.

NOTE

Observe the national regulations for your country!

Safety regulations

Safety guidelines

The operating company or the person it has commissioned must ensure that the driver understands all safety information and that all directives and safety regulations are observed.

During training, drivers must familiarise themselves with the following:

- The operating conditions of the working area
- The specific technical characteristics of the industrial truck
- The operation of attachments

Driving, control and steering operations must be practised with an unloaded industrial truck until they are completely mastered. Only then may a loaded industrial truck be used for practice.

Operating safely

⚠ DANGER

The industrial truck must not be used by unauthorised persons.

Only persons who are trained, authorised and commissioned to operate the industrial truck may have access to the industrial truck.

Controlled access is possible via the switch key or an input unit with a keypad or with a transponder.

⚠ DANGER

Safety systems (e.g. the seat switch) are in place to ensure safety.

Under no circumstances may any safety systems be disabled.

⚠ DANGER

Risk of fire due to hot exhaust gases!

Exhaust gases become so hot that materials in the immediate vicinity may smoulder or burn.

Deposits of combustible materials may ignite in the vicinity of hot components, e.g. exhaust pipes.

– Observe the following measures!

– Maintain an appropriate safety distance between combustible materials and the exhaust gas outlet.

– If materials start to burn, take appropriate fire extinguishing measures immediately.

– Remove deposits on hot components.

– Keep away from flammable liquids.

⚠ WARNING

Risk of burns due to hot exhaust gases.

Exhaust gases and exhaust-gas-routing components become so hot that direct body contact can cause burns.

– Do not touch hot components.

⚠ WARNING

Risk of accident if the work area is insufficiently lit!

Ensure that there is sufficient light in the working area or use working spotlights.

⚠ CAUTION

Various pieces of special equipment are connected to the "speed reduction" special function. This is purely an assistance function, and the driver must not rely solely on this function during operation.

The driver is always responsible for safe operation.

NOTE

If the truck is equipped with a fire extinguisher, make sure that you familiarise yourself with how to use it in the event of an emergency. Instructions for use are provided on the fire extinguisher.

Working on the truck

⚠ DANGER

Any additional bores or welding on the overhead guard will compromise its rigidity.

It is therefore strictly prohibited to drill holes in the overhead guard or to perform welding work on it.

⚠ WARNING

Depending on the duration of use and operating time, components carrying exhaust gases and exhaust air may become hot.

Protective equipment must therefore be worn.

⚠ WARNING

In trucks with an accumulator, serious injuries may occur if the accumulator is handled incorrectly.

Before starting work on the accumulator, it must be depressurised.

Contact your authorized dealer.

⚠ CAUTION

Welding operations on other parts of the truck can cause damage to the electronics.

Therefore, always disconnect the battery and all connections to the electronic controls before performing any welding work.

⚠ CAUTION

Various functions are supported by gas springs. Gas springs are subjected to a high internal pressure of up to 300 bar.

Gas springs may be removed only when they are not under pressure, and must never be opened without prior instruction. Any kind of damage, lateral forces, buckling, temperatures in excess of 80°C and heavy contamination must be avoided under all circumstances.

Damaged or defective gas springs must be replaced immediately.

Contact your authorized dealer.

Safety information for electromagnetic compatibility

⚠ WARNING

In operating areas with magnetic fields that have a magnetic flux density greater than 5 mT, unintentional truck and lift mast movements cannot be entirely excluded in unfavourable circumstances.

For magnetic fields with magnetic flux densities greater than 5 mT, components developed especially for this purpose must be used.

Contact your authorized dealer.

Magnetic flux densities greater than 5 mT can occur in induction furnaces for metal smelting (e.g. aluminium), with resistance welders for seam or spot welding, or on strong demagnetisation coils. However, as the flux densities reduce to a fraction as the distance increases by e.g. 50 cm, actual influences are not known to occur in practice.

Electromagnetic radiation emitted by the industrial truck is far below the permissible limit values in Europe. The immunity to electromagnetic radiation is above the minimum legal values.

⚠ WARNING

If a driver has active medical equipment such as a pace makers, defibrillator, cochlear implant, insulin pump or hearing aid, there is a possibility that the capabilities of the driver could be impaired.

The operating company must take drivers whose capabilities are restricted due to implanted or body-worn medical equipment into account in the hazard assessment. The instructions of the physician and of the manufacturer of the medical equipment must be followed.

⚠ WARNING

Risk from non-ionising radiation from retrofitted devices (e.g. radio transmitter).

Persons with active or non-active implanted medical equipment must not be exposed to excessive non-ionising radiation from the electromagnetic fields of retrofitted devices.

The guidelines from the respective device manufacturer must be followed. If necessary, fit a notice warning about non-ionising radiation within the field of vision of the driver.

Exhaust gases

⚠ CAUTION

Risk to health from exhaust gases! Exhaust gases from internal combustion engines are harmful to your health. In particular, the soot particles contained in the diesel exhaust gas can cause cancer. Letting the combustion engine idle runs a risk of poisoning from the CO, CH and NO_x components contained in the exhaust gas

Modern exhaust gas treatment systems (e.g. catalytic converters, particle filters or comparable systems) can clean exhaust gases in a way that reduces the health hazard and risk of poisoning when operating the truck.

– Observe the national laws and regulations when using trucks with an internal combustion engine in entirely or partially enclosed working areas.

– Always ensure sufficient ventilation.

Definition of terms used for responsible persons

Operating company

The operating company is the natural or legal person who operates the truck or on whose authority the truck is used.

The operating company must ensure that the truck is only used for its proper purpose and in compliance with the safety regulations set out in these operating instructions.

The operating company must ensure that all users read and understand the safety information.

The operating company is responsible for the scheduling and correct performance of regular safety checks.

We recommend that the national specifications for the performance of safety checks are observed.

Specialist

A qualified person is defined as a service engineer or a person who fulfils the following requirements:

- A completed vocational qualification that demonstrably proves their professional expertise. This proof should consist of a vocational qualification or a similar document.
- Professional experience indicating that the qualified person has gained practical experience of industrial trucks over a proven period during their career During this time, this person has become familiar with a wide range of symptoms that require checks to be carried out, such as based on the results of a hazard assessment or a daily inspection
- Recent professional involvement in the field of the industrial truck test in question and an appropriate further qualification are essential. The qualified person must have experience of carrying out the test in question or of carrying out similar tests. Moreover, this person must be aware of the latest technological developments regarding the industrial truck to be tested and the risk being assessed

Competent person

A competent person is a specialist in the field of industrial trucks who has:

- Successfully completed training, as at least a service engineer for industrial trucks
- Many years of professional experience with industrial trucks
- Knowledge of the accident prevention regulations
- Knowledge of the relevant national technical regulations

The competent person is able to assess the condition of industrial trucks in terms of health and safety.

Drivers

Trucks must be driven only by persons who:

- Are at least 18 years of age
- Have been trained in performing this task
- Have demonstrated their ability to perform this task, e.g. driver's licence

Specific knowledge of the truck to be operated is also required.

The contract for driving a truck must be provided in writing. Observe the national regulations for your country.

NOTE

A driver's licence for public roads is required in order to drive industrial trucks on public roads. Observe the national regulations for your country.

Rights, duties and rules of behaviour for the driver

The driver must:

- Be informed of his rights and duties
- Wear sturdy footwear to ensure safe driving and braking
- Wear protective equipment appropriate to the application conditions (protection suit, safety shoes, safety helmet, protection goggles, gloves)
- Have read and understood the operating instructions
- Have familiarised themselves with safe operation of the truck
- Be physically and mentally able to drive the truck safely

DANGER

Risk of fatal injury due to impaired reactions!

Do not perform any work on or with the truck while under the influence of drugs, alcohol or medication that impair your reactions.

Prohibition of use by unauthorised persons

The driver is responsible for the truck during working hours. He must not allow unauthorised persons to operate the truck.

When leaving the truck, the driver must secure it against unauthorised use, e.g. by removing the key.

Ground condition for using the truck

In order for the truck to be used, suitable ground must have the following characteristics:

- Even and level
- Hard
- Sturdy
- Free of obstacles
- Properly prepared for the purpose

Safety Regulations Relative to Forklift Use

- The operator must familiarize himself with the forklift to be able to better describe any defects and assist maintenance personnel. The operator, trained and authorized to use the forklift, must be familiar with the controls and performances of the forklift.
- Any defect (squeaking, leaks, etc.) must be promptly reported because, if neglected, it could cause more serious failures/defects.
- Carry out the inspections indicated in the chapter on "Daily Inspections".

ENVIRONMENT NOTE

Report any oil and/or battery fluid leaks: they are dangerous and highly polluting.

⚠ CAUTION

If you notice a burning smell, stop the forklift and turn off the engine, then disconnect the battery.

Carrying out regular inspections on the truck

The operating company must ensure that the truck is checked by a specialist at least once a year or after particular incidents.

As part of this inspection, the technical condition of the truck must be completely tested with regard to accident safety. In addition, the truck must be thoroughly checked for damage that may have been caused by improper use. A test log must be created. The results of the inspection must be retained at least until a further two inspections have been carried out.

The inspection date is indicated by an adhesive label on the truck.

– Arrange for the authorised service centre to perform regular testing on the truck.

– Observe the guidelines for tests carried out on the truck in accordance with FEM 4.004.

The operating company is responsible for ensuring that any defects are remedied without delay.

– Notify your authorised service centre.

NOTE

In addition, observe the national regulations for the country of use.

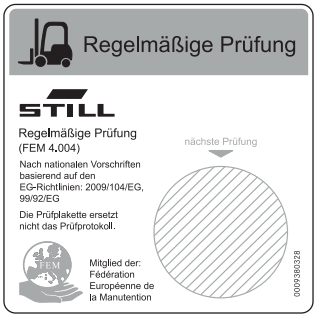

6219_003-020

Improper use

The operating company or driver, and not the manufacturer, is liable if the truck is used in a manner that is not permitted.

WARNING

One of the main causes of accidents is the driver ignoring or being unaware of the basic safe operating practices of the truck.

The following basic safe operating practices must be observed to ensure the safety of operators and others.

DANGER

High risk of injury, death and property damage.

Avoid the use of prohibited substances.

The list below is merely illustrative and not exhaustive.

Never operate the truck in environments with a potentially explosive atmosphere.

Do not carry another passenger (unless a "two-person seat" is installed).

Do not overload the truck (by exceeding the rated load indicated on the load designation

plate). Overloading can affect braking distances, truck stability and the strength of the lift mast.

Do not pick up an off-centre load.

Do not stand on the fork arms when they are lifting.

Do not increase the load capacity of the truck, by adding extra weight, for example.

Do not stack loads or turn when driving on a ramp.

Do not operate the truck on loose or greasy surfaces.

Do not drive on uneven or obstructed surfaces.

Never park the truck in a place that may obstruct fire extinguishers, fire escapes or aisles.

Do not dismount from the truck while it is moving.

Do not leave the truck unattended when the load is raised.

Never leave the vehicle unattended on a ramp.

When driving, do not place any part of your body outside the confines of the truck, lean on the edge of the truck or attempt to jump onto another truck or object.

Do not use the forks or any other part of the truck to push, pull or support items, unless the design permits this.

Operating steps

Adjust your driving style based on the conditions of the route, especially in hazardous work areas and when transferring loads.

Always look in the direction of travel.

Look out for pedestrians, to prevent the possibility of them becoming trapped between the truck and fixed obstacles.

Always sound the horn when approaching blind spots.

The truck and attachments must only be used for authorised applications.

Follow the instructions in the user manual when transporting loads.

On a ramp: Ensure that the truck has sufficient ground clearance to avoid striking the surface of the ramp. • Fully raise the load to avoid striking the surface of the ramp.

Drive a loaded truck forward when going uphill.

Drive a loaded truck in reverse when going downhill.

When raising a spreader, ensure that there is enough clearance.

When working near overhead power lines, observe the safety distances set by the competent authorities.

Only travel on surfaces that can withstand the combined weight of the truck and load.

Before leaving the operator's driving position, turn off the ignition and make sure you have applied the parking brake.

When driving, maintain a safe stopping distance from any vehicle or pedestrians in front of you.

Drivers should move off, brake, turn and reverse smoothly. Avoid sudden stops, sharp turns and overtaking at dangerous or blind spots.

Ensure that there is adequate ventilation when using the truck in enclosed or partially enclosed areas.

Summary

A safe, competent operator is one who takes pride in the way they operate their truck, respects the goods they handle and follows the correct operating procedures. **They never take risks**.

Hazard assessment

In accordance with health and safety regulations, the employer is responsible for the safety and health of employees at work.

In Europe, Directive 89/391/EEC and the individual directives based thereon stipulate the minimum level of health and safety requirements. The directives are transposed into national law in the EU Member States. These can be expanded on a country-specific basis.

Countries outside the European Union also have regulations governing occupational health and safety. It is therefore essential to also observe national laws for health and safety.

For companies that operate industrial trucks, the hazard assessment is a key element in defining measures to eliminate or minimise the dangers connected with the operation of industrial trucks.

If the application conditions or the equipment on industrial trucks change, the hazard assessment must be adjusted.

Important points for the hazard assessment include:

- Roadways
- Poor visibility for the driver when the industrial truck is laden
- Working areas with hazardous materials
- Danger areas
- Fire protection
- Physical strain on the driver
- Attachments used with the industrial truck

Detailed information is also available in the VDMA (Verband Deutscher Machinen- und Anlagenbau — German Mechanical Engineering Industry Association) guideline "Employer's Guide for the Safe Use of Industrial Trucks", see the chapter entitled "Foreword".

Residual risks

Despite careful work and compliance with all applicable standards and regulations, the possibility of other dangers when using the industrial truck cannot be entirely excluded.

The industrial truck and its possible attachments comply with current safety regulations. Nevertheless, even when the truck is used for its proper purpose and all instructions are followed, some residual risk cannot be excluded.

Even beyond the narrow danger areas of the industrial truck itself, a residual risk cannot be excluded. Persons in the area around the industrial truck must exercise a heightened degree of awareness, so that they can react immediately in the event of any malfunction, incident or breakdown.

⚠ DANGER

Persons in the vicinity of the industrial truck must be instructed with regard to the dangers that arise through use of the truck.

These operating instructions also contain additional safety regulations.

Residual dangers can include:

- Escape of consumables due to leakages or the rupture of lines, hoses or containers,
- Risk of accident when driving over difficult ground such as gradients, smooth or irregular surfaces, or with poor visibility,
- Risk of falling, tripping, slipping etc. during movement of the industrial truck, especially in the wet, with leaking consumables or on icy surfaces,
- Risk of fire and explosion due to the battery and electrical voltages,
- Human error,
- Disregarding the safety regulations,
- Risk caused by unrepaired damage,
- Risk caused by insufficient maintenance or testing,
- Risk caused by using the wrong consumables.

Stability

Stability is guaranteed if your industrial truck is used according to its intended use.

The following actions may jeopardise stability:

- Driving with a raised load
- Cornering at excessive speeds
- Driving with a load that is protruding to the side (e.g. sideshift)
- Turning on and driving diagonally across descents or ascents
- Driving on descents or ascents with the load on the downhill side
- Loads that are too wide
- Driving with a swinging load
- Driving over ramp edges or steps

If the industrial truck tips due to improper or incorrect operation:

- Do not release your seat belt
- Do not jump out
- Hold on tight
- Brace yourself with your feet
- Lean in the opposite direction to which the truck is tipping

▷

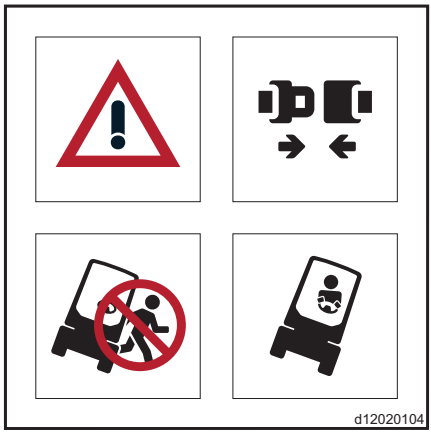

In the case of tip-over

d3921101

- Stay buckled up
- Don't jump
- Hold on tight
- Brace feet
- Lean away

The stability of your industrial truck is ensured if used properly and as intended. Should the industrial truck tip over during an unapproved application or due to incorrect operation, always follow the instructions depicted above.

Safety regulations when driving

Driving conduct

The driver must follow the public rules of the road when driving in company traffic.

The speed must be appropriate to the local conditions.

For example, the driver must drive slowly around corners, in tight passageways, when driving through swing-doors, at blind spots, or on uneven surfaces.

The driver must always maintain a safe braking distance from vehicles and persons in front, and must always have the truck under control. Stopping suddenly, turning quickly and overtaking at dangerous or blind spots must be avoided.

– Initial driving practice must be carried out in an empty space or on a clear roadway.

The following are forbidden during driving:

- Allowing arms and legs to hang outside the truck
- Leaning the body over the outer contour of the truck
- Climbing out of the truck
- Moving the driver's seat
- Adjusting the steering column
- Releasing the seat belt
- Disabling the restraint system
- Raising the load higher than 300 mm above the ground (with the exception of manoeuvring processes during the placement into stock/removal from stock of loads)
- Using electronic devices, for example radios, mobile phones etc.

⚠ WARNING

The use of multimedia and communication equipment as well as playing these devices at an excessive volume during travel or when handling loads can affect the operator's attention. There is a risk of accident!

– Do not use devices during travel or when handling loads.

– Set the volume so that warning signals can still be heard.

⚠ WARNING

In areas where use of mobile phones is prohibited, use of a mobile phone or radio telephone is not permitted.

– Switch off the devices.

Visibility when driving

The driver must look in the drive direction and have a sufficient view of the driving lane.

Particularly for reverse travel, the driver must be sure that the driving lane is clear.

When transporting goods that impair visibility, the driver must drive the truck in reverse.

If this is not possible, a second person acting as a guide must walk in front of the truck.

In this case the driver must only move at walking pace and with extra care. The truck must be stopped immediately if eye contact with the guide is lost.

Rear-view mirrors are only to be used for observing the road area behind the truck and not for reverse travel. If visual aids (mirror, monitor) are necessary to achieve sufficient visibility, it is necessary to practise using them. For reverse travel using visual aids, extra care should be taken.

When using attachments, special conditions apply; see the chapter entitled "Fitting attachments".

Any glass (variant, e.g. windscreen) and mirrors must always be clean and free of ice.

Safety regulations in case of accidental lateral tipping

If as a result of incorrect manoeuvring the truck appears to be tipping over sideways, carefully follow the instructions below:

a) Do not leave the forklift truck.

b) Tilt your head forward and move your body in the opposite direction to which the forklift is tipping.

c) Remain firmly seated, grip the steering wheel and dig your heels in. Wait until the truck has reached a stable position before leaving the truck.

Commissioning of LPG-fuelled trucks

A - For use with "fixed bottle" that can be filled by the user

In order to comply the safety requirements of the ISO 3691 standard, the bottle must be equipped with at least the following:

- Manual shut-off tap;
- Valve (2) as indicated in the previous point;
- Overpressure valve;
- Device for indicating the maximum level;

and it must be subjected to the tests provided for by the regulations in force in the country in which the truck is used.

This specific variant must be requested from the manufacturer at the time the truck is ordered; if the set-up occurs at a later time, however, it is essential to use the original kit and carry out the assembly as provided for by the manufacturer.

B - For use with a “removable bottle”

The bottle must be:

- Compliant with the requirements of ISO 3691 (valve (2) as indicated previously, manual shut-off cock);
- Suitable for safe use on vehicles designed as indicated above;
- Compliant with the requirements regarding containers under pressure currently in force in the country in which the truck is used;
- Subjected to any tests provided for by the requirements referred to above;
- Accompanied by an appropriate card certifying its origin.

When making the connection, check the compatibility of the pipe/bottle fittings and use appropriate adapters if necessary.

NOTE

The person commissioning the truck is completely responsible for complying with the requirements stated in points A and B above. In this regard, it is advisable to always consult specialists in the sector for the validation of the equipment. It is advisable to use a removable bottle equipped with overpressure valve.

The manufacturer assumes no responsibility for:

- Use of non-compliant tanks;
- Incorrect installation of the same;
- Commissioning of the truck without having satisfied the safety regulations and laws in force in the country in which the truck is used.

DANGER

The leakage of liquid gas may cause freeze burns and/or explosions. This can occur particularly in the case of gas leaks from the system or when the engine doesn't start or is difficult to start. Thus if these anomalies should occur, it is strictly prohibited to perform work on the gas system and it is strictly prohibited to use the truck.

⚠ DANGER

LPG is highly flammable due to its volatility. Furthermore, since it has a specific weight higher than that of air (approximately twice the value), if the gas leaks it remains suspended near the ground, thus increasing the resulting hazard. It is prohibited to park or leave the truck in closed and/or underground environments.

General safety rules for liquid gas

The term "liquid gas" refers to BUTANE or PROPANE or mixtures of BUTANE/PROPANE supplied in bottles or particular tanks and used for the propulsion of internal-combustion engines.

The LPG quality must comply with the requirements of **DIN 51622** as a minimum. The quality is optimum when the LPG complies with the requirements of **EN 589** (automotive gas).

⚠ DANGER

Risk of explosion! LPG is heavier than air; it diffuses on the ground and spreads over large areas.

- Trucks with LPG systems must only be parked in sufficiently well-ventilated areas above ground level.
- They must not be parked near entrances to rooms below ground level.
- Sufficient space must be left around trucks that have been parked; such areas must not include cellar openings or cellar access points, pits or similar cavities, drains without liquid seals, ventilation shafts and light wells or combustible material.

⚠ DANGER

Risk of fire! Whenever LPG escapes, it immediately becomes gaseous and therefore produces a potentially explosive atmosphere. The vapours are heavier than air and diffuse on the ground. Vapours spread over large areas and can cause fires and reignition.

LPG trucks and LPG cylinders must only be operated and parked or stored in well-ventilated areas.

⚠ DANGER

Risk of explosion!

- Do not smoke during maintenance work on LPG systems, and make sure that there are no open flames, stoves, lanterns or similar items located in the vicinity.
- Use only anti-static-treated tools that do not produce sparks.
- Anti-static clothing and footwear are recommended.

Condition of the LPG cylinders

⚠ DANGER

LPG cylinders must not protrude beyond the edges of the truck body because collisions with objects or other trucks could cause them to be damaged. There is a risk of explosion!

- Only use LPG cylinders that have been approved for operation of the LPG system.

Duties of the employer and the worker

The employer or the manager of the plant where the liquid gas-powered industrial trucks are used must ensure that these trucks are used and maintained by suitably trained personnel only. The liquid gas-powered truck can be put into service only after having checked that it is in good condition.

The employer must provide company instructions for the industrial trucks used, written in a simple and understandable format and containing all the information necessary for safe use of these trucks within the company activities. All the operators and maintenance personnel must be familiar with these instructions, and the instructions must always be available and strictly followed in the workplace.

A - During use

- Before loosening the pipe fittings or hoses, the truck must be switched off and the bottle tap must be closed. The closure nuts on the bottles should be loosened slowly and only partially at first, otherwise the gas under pressure in the piping may escape violently.

⚠ CAUTION

Possible injury from frostbite!

Liquid gas in contact with the skin causes freeze burns!

- When a removable gas bottle (i.e., cylinders) is installed, it must be assembled onto the truck in a horizontal position with the threaded fitting of the tap facing downwards. During assembly and disassembly, close the tap with the respective threaded plug (supplied with the bottle). Before connecting the gas bottle, check that the fittings are compatible with the pipe. After disassembly of the empty bottle, the threaded plug (supplied with the bottle) should be screwed back on.
- The tap must be opened slowly! The opening and closing of the tap must be carried out without the aid of any tools in order to avoid the risk of explosions due to sparks.

⚠ CAUTION

In case of fires involving liquid gas, only dry or gaseous carbon dioxide fire extinguishers should be used!

- Gas bottles which are not leak-tight must not be used, but should instead be immediately emptied outdoors, taking all the necessary safety precautions, and then marked with the legend "**DEFECTIVE**". If damaged bottles have been supplied, immediately notify the distributor or its representative (dealer, etc.) of the damage, in writing if possible. In any event, never use a damaged bottle.
- The entire liquid gas system must be checked frequently to ensure that it works safely, paying particularly attention to the tightness of all its parts. It is prohibited to use the truck when the liquid gas system is not airtight. To check the tightness of the system, use soapy water, Nekal solution or other foaming agents. It is prohibited to inspect the liquid gas system with an open flame.
- Ensure that the engine is adjusted so as to produce only a minimum quantity of noxious gases in the exhaust.
- Frozen parts of the system must be thawed out only with hot water, hot sandbags or the like. Open flames, incandescent objects etc. may cause explosions.
- When any single part of the system is being replaced, the manufacturer's installation instructions must be followed. The tap of the bottle must be closed during these operations.
- The conditions of the electrical systems of liquid gas-powered trucks should be monitored constantly. In case of leaks in the gas-conducting parts of the system, sparks from the electrical components may cause explosions. After a liquid gas-powered truck has been shut down for a lengthy period, the garage must be thoroughly aerated before starting up the truck or its electrical system.
- Trucks with LPG engines must only be used in closed or partially closed areas once it has been guaranteed that the area in question is sufficiently well-ventilated. This precaution prevents the accumulation of dangerous concentrations of harmful gases.
- Liquid gas-powered fork lift trucks may be parked only in well-ventilated garages which are not underground. They must not be parked near cellar entrances or ditches or similar cavities, or near openings of drainage canals or open sewers, near air shafts, stairwells or places where flammable materials are stored.
- During work in the repair shops, the tap of the bottle must be closed and the gas bottles should be protected against heat. Work requiring the use of a flame, particularly for welding or cutting, must not be carried out near gas bottles. Gas bottles, even when empty, must not be stored in the shops.
- In case of explosions, even if no accidents have been caused, inform the relevant authorities in compliance with the current requirements in the country in which the truck is used.
- The replacement of gas containers (replacing empty bottles with full bottles) is allowed in the garages only when sufficient

ventilation is guaranteed (no hazardous concentration of explosive gases).

B — storage of gas containers

- Refer to all the national or local requirements and regulations on the treatment and storage of full, portable and closed containers for compressed, liquefied and dissolved gases under pressure. For example, it is prohibited to store pressure containers: in underground areas; in stairwells, passageways and antechambers, above all in confined areas, yards or passages or near such; in the safety exits; in garages; in the workplace. Comply with all the general requirements for use and storage of containers under pressure provided for by the laws in force.
- Electric inspection lamps used in these areas must be equipped with an airtight chamber and sturdy protective grating.
- Garages, warehouses and repair shops must be well-ventilated. It should be noted that liquid gases are heavier than air and thus accumulate near the ground, in work pits and in other depressions in the ground, where they may form explosive mixtures of gas and air
- Keep containers away from ignition sources and heat sources.
- Protect containers against sunlight.
- Lock containers when stored, and keep out of the reach of children.

Exercise caution when handling gas springs and accumulators

⚠ WARNING

Gas springs are under high pressure. Improper removal results in an elevated risk of injury.

For ease of operation, various functions on the truck can be supported by gas springs. Gas springs are complex components that are subject to high internal pressures (up to 300 bar). They may under no circumstances be opened unless instructed to do so, and may be installed only when not under pressure. If required, the authorised service centre will depressurise the gas spring in accordance with the regulations before removal. Gas springs must be depressurised before recycling.

– Avoid damage, lateral forces, buckling, temperatures over 80°C and heavy contamination.
– Damaged or defective gas springs must be changed immediately.
– Contact the authorised service centre.

⚠ WARNING

Accumulators are under high pressure. Improper installation of an accumulator results in an elevated risk of injury.

Before starting work on the accumulator it must be depressurised.

– Contact the authorised service centre.

Safety regulations for handling consumables

Permissible consumables

⚠ DANGER

Failure to observe the safety regulations relating to consumables may result in a risk of injury, death or damage to the environment.

– Observe the safety regulations when handling such materials.

The permissible materials required for operation can be found in the supply table in the chapter entitled "Maintenance".

Oils

DANGER

Oils are flammable!

- Follow the statutory regulations.
- Do not allow oils to come into contact with hot engine parts.
- No smoking, fires or naked flames!

DANGER

Oils are toxic!

- Avoid contact and consumption.
- If vapour or fumes are inhaled, move to fresh air immediately.
- In the event of contact with the eyes, rinse thoroughly (for at least 10 minutes) with water and then consult an eye specialist.
- If swallowed, do not induce vomiting. Seek immediate medical attention.

WARNING

Prolonged intensive contact with the skin can result in dryness and irritate the skin!

- Avoid contact and consumption.
- Wear protective gloves.
- After any contact, wash the skin with soap and water, and then apply a skin care product.
- Immediately change soaked clothing and shoes.

WARNING

There is a risk of slipping on spilled oil, particularly when combined with water!

- Spilt oil should be removed immediately with oil-binding agents and disposed of according to the regulations.

ENVIRONMENT NOTE

Oil is a water-polluting substance!

- *Always store oil in containers that comply with the applicable regulations.*
- *Avoid spilling oils.*
- *Spilt oil should be removed immediately with oil-binding agents and disposed of according to the regulations.*
- *Dispose of old oils according to the regulations.*

Hydraulic fluid

⚠ WARNING

These fluids are pressurised during operation of the truck and are hazardous to your health.

- Do not spill the fluids.
- Follow the statutory regulations.
- Do not allow the fluids to come into contact with hot engine parts.

⚠ WARNING

These fluids are pressurised during operation of the truck and are hazardous to your health.

- Do not allow the fluids to come into contact with the skin.
- Avoid inhaling spray.
- Penetration of pressurised fluids into the skin is particularly dangerous if these fluids escape at high pressure due to leaks in the hydraulic system. In case of such injury, immediate medical assistance is required.
- To avoid injury, use appropriate personal protective equipment (e.g. protective gloves, industrial goggles, skin protection and skin care products).

ENVIRONMENT NOTE

Hydraulic fluid is a water-polluting substance.

- *Always store hydraulic fluid in containers that comply with regulations*
- *Avoid spills*
- *Spilt hydraulic fluid should be removed immediately with oil-binding agents and disposed of according to the regulations*
- *Dispose of old hydraulic fluid according to the regulations*

Battery acid

⚠ WARNING

Battery acid contains dissolved sulphuric acid. This is toxic.

- Avoid touching or swallowing the battery acid at all costs.
- In case of injury, seek medical advice immediately.

⚠ WARNING

Battery acid contains dissolved sulphuric acid. This is corrosive.

- When working with battery acid, use appropriate PSA (rubber gloves, apron, protection goggles).
- When working with battery acid, never wear a watch or jewellery.
- Do not allow any acid to get onto clothing or skin or into the eyes. If this does happen, rinse immediately with plenty of clean water.
- In case of injury, seek medical advice immediately.
- Immediately rinse away spilt battery acid with plenty of water.
- Follow the statutory regulations.

ENVIRONMENT NOTE

– Dispose of used battery acid in line with the applicable regulations.

Disposal of consumables

ENVIRONMENT NOTE

Materials that accumulate during repair, maintenance and cleaning must be collected properly and disposed of in accordance with the national regulations for the country in which the truck is being used. Work must only be carried out in areas designated for the purpose. Care must be taken to minimise any environmental pollution.

– Soak up any spilt fluids such as hydraulic oil, brake fluid or gearbox oil using an oil-binding agent.

– Neutralise any spilt battery acid immediately.

– Always observe national regulations concerning the disposal of used oil.

Environmental considerations

Handling consumables

ENVIRONMENT NOTE

Consumables must be handled properly and in accordance with the manufacturer's instructions.

- Consumables must be stored only in containers that comply with the applicable regulations and at the locations stipulated
- Do not allow flammable consumables to come into contact with hot objects or naked flames
- When topping up consumables, use only clean containers
- Observe the manufacturer's instructions relating to safety and disposal
- Avoid spillages
- Clean up spilled liquids immediately using suitable binders; dispose of these in accordance with regulations
- Old and contaminated consumables must be disposed of in accordance with the applicable regulations
- Comply with the statutory provisions
- Before performing lubrication work, filter changes or any work on the hydraulic system, carefully clean the area around the relevant part
- Dispose of used spare parts in an environmentally responsible manner

WARNING

Pressurised hydraulic fluid penetrating the skin, e.g. due to leakage, is dangerous. If an injury of this type occurs, consult a doctor.

– Wear protective equipment.

WARNING

The improper handling of coolant and coolant additives presents a risk to health and the environment.

– Observe the manufacturer's instructions.

Disposing of components and batteries

The truck is composed of different materials. If components or batteries need to be replaced and disposed of, the national regulations must be observed with regard to:

- Disposal
- Handling
- Recycling

NOTE

The documentation provided by the battery manufacturer must be observed when disposing of batteries.

ENVIRONMENT NOTE

We recommend working with a waste management company for disposal requirements.

Packaging

During delivery of the truck, certain parts are packaged to provide protection during transport. This packaging must be removed completely prior to initial start-up.

ENVIRONMENT NOTE

The packaging material must be disposed of properly after delivery of the truck.

Safety instructions for the LPG system

We wishes you a long use of your LPG truck with maximum safety.

WARNING

When LP gas leaks out, there is an immediate danger of explosion resulting in the risk of burns.

This is particularly the case when:

– leaks occur on the LPG system,

– the engine does not start or starts poorly.

For this reason it is absolutely:

– forbidden to remove the evaporator cap (1), ▷ and have the cap (1) installed by qualified dealer staff, if missing,

– forbidden to manipulate the LPG system in any way if any malfunctions occur,

– forbidden to continue to operate the truck if any malfunctions occur.

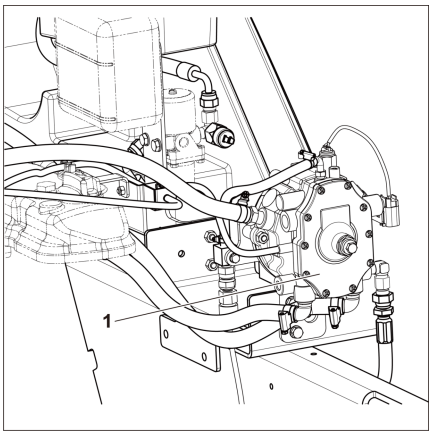

Safety information on the LPG system

⚠ DANGER

In the event of an LPG leak, there is a risk of explosion and fire at any time.If LPG starts to leak and the engine fails to start or a starting malfunction occurs, the risk of explosion or fire is especially serious.

If there is a malfunction, carrying out any operation in the LPG system or continuing to operate the forklift truck is prohibited.

⚠ DANGER

Using twin LPG cylinders may carry a risk of explosion.

If an additional safety valve has been installed, please only use replacement cylinders made of aluminium or mixed materials.

Emissions

The values specified apply to a standard truck (compare the specifications in the "VDI datasheet" chapter). Different tyres, lift masts, additional units etc. may produce different values.

Noise emissions

The values were determined based on measuring procedures from the standard EN 12053 "Safety of industrial trucks. Test methods for measuring noise emissions“ based on EN12001 and EN ISO 3744 and the requirements of EN ISO 4871.

This machine emits the following sound pressure level:

Continuous sound pressure level in the driver’s compartment

	LpAZ	Measurement uncertainty KpA
RCG20	80 dB	4dB

The values were determined in the test cycle on an identical machine from the weighted values for operating statuses and idling.

However, the indicated noise levels at the truck cannot be used to determine the noise emissions at workplaces according to the most recent version of Directive 2003/10/EC (daily personal noise pollution). If required, these noise emissions must be determined directly at the workplaces under the actual conditions present (further sources of noise, particular application conditions, sound reflections) by the operating company.

NOTE

Please note the definition of "operating company" in the sense of responsible persons!

Vibrations

The vibrations of the machine have been determined on an identical machine in accordance with the standards DIN EN 13059 "Safety of industrial trucks - Test methods for measuring vibration" and DIN EN 12096 "Mechanical vibration - Declaration and verification of vibration emission values".

Frequency-weighted effective value of acceleration on the seat

The following value is valid for all truck models:

	Driver’s seat	Measurement uncertainty
RCG20	Seat < 1.2 m/s2	0.3 m/s2

Tests have indicated that the amplitude of the hand and arm vibrations on the steering wheel or the operating devices in trucks is less than 2.5 m/s2. There are therefore no measurement guidelines for these measurements.

The personal vibration load on the driver over a working day must be determined by the operating company at the actual place of use in accordance with Directive 2002/44/EC, in order to consider all additional influences, such as driving route, intensity of use etc. are considered.

NOTE

Please note the definition of "operating company" in the sense of responsible persons!

Fitting attachments

Only competent persons are permitted to fit the attachment and connect the energy supply for power-driven attachments.

Mechanical connection

For **hooked on** attachments, the attachment and fork carriage must be of the same class.

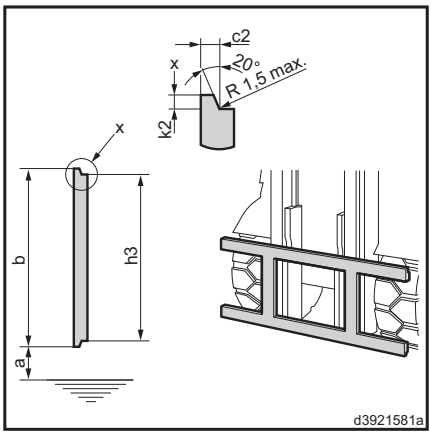

Class As per ISO 2328	Load capacity Truck kg	Load centre of gravity mm	Version	a mm	b mm	c2 mm	k2 mm	h3 mm
1	0 - 999	400 and 600	A	76	331	16	13	305
			B	114				
2	1000 - 2500	500 and 600	A	76	407	16	13	381
			B	152				
3	2501 - 4999	500 and 600	A	76	508	21.5	16	476
			B	203				
4	5000 - 8000	600	A	127	635	25.5	19	597
			B	254				
5	8001 - 10999	600	A	127	728	34	25	678
			B	257				

Integrated attachments are made to match the installed lift mast. When retrofitting attachments, the correct attachment and all of the necessary parts from the industrial truck manufacturer—especially lift mast rollers and chain supports—must be available.

Contact your service partner.

Hydraulic connection

⚠ WARNING

The hydraulic system is pressurised. Risk of injury.

Wear protective equipment.

⚠ CAUTION

Risk of damage to the hydraulic system through contamination.

When connecting hydraulic lines, ensure that they are clean.

Before connecting hydraulic lines or hydraulic couplings, the hydraulic system must be depressurised.

Without depressurisation:

– Place a collection container underneath the system.

– Carefully release the connection for the hydraulic lines.

As the pressure decreases, hydraulic oil escapes.

– Disconnect the hydraulic lines.

– Connect the hydraulic lines to the attachment.

With depressurisation: (special equipment)

– Depressurise the hydraulic lines as described in the section entitled "Depressurisation".

– Disconnect the hydraulic lines.

– Connect the hydraulic lines to the attachment.

Additional capacity rating plate

Attachments alter the load capacity and stability of the truck. For each attachment, an additional capacity rating plate must be mounted in the driver's field of vision to indicate the load capacity of the truck with the attachment; refer to the section entitled "Additional capacity rating plate for attachments".

The emergency exit of the cab

If the truck installs a cab, the emergency exit of the cab is as same as the entrance.

Manually lowering the fork arms with ISO

The control valve is equipped with an emergency lowering screw (1) for manual lowering of the fork carriage. This may be required if a malfunction occurs in the hydraulic system. The control valve is located under the control lever on the right-hand side of the truck and is equipped with an emergency lowering screw.

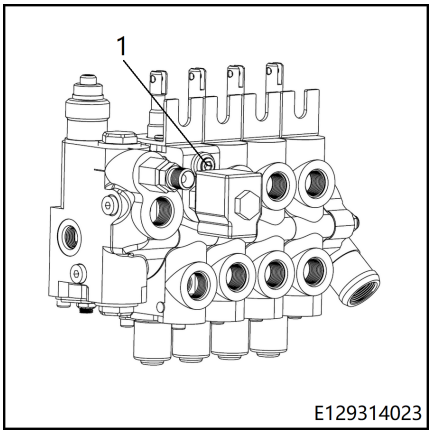

⚠ DANGER

Do not stand in the vicinity of the forks when the fork arms are being lowered.

During lowering, leave the socket wrench on the screw on the valve block to enable lowering to be stopped at any time.

- Remove the foot plate and the joystick base cover.
- Slowly turn the emergency lowering screw about 1.5 turns anticlockwise using a hexagon socket wrench.
- Gently push the joystick until the forks are completely lowered.
- After it is lowered, turn back the emergency lowering screw clockwise with $2.5^{0.5}$Nm tightening torque. Otherwise, you cannot use the joystick to operate the fork carriage.
- Refit the foot plate and the joystick base cover.

Safety tests

Carrying out regular safety inspections on the LPG system

Technical safety inspection of the LPG system

The operating company must commission a competent person to check the LPG system. Observe the national regulations in the relevant country! In Germany, check the system in accordance with § 37 of the employers' liability association regulations BGV D34 entitled "Accident prevention regulation for the use of LPG".

NOTE

Please observe the definition of the following responsible persons: "operating company" and "competent person".

The LPG system must be checked:

- Recurring in regular intervals, but at least once per year
- After repair work that may affect operational safety
- After changes that may affect operational safety
- After breaks in operation of more than one year.

The following will be checked: proper condition, the possibility of leakages, function, installation and the functionality of the safety devices.

The results from the inspection must be recorded in an inspection document in accordance with BGG 936 (observe the applicable national regulations). The results must be retained until the next inspection. The inspection documents must be available for viewing by the authorities at any time.

The type and scope of tests may differ according to the country. Any differing legal provisions in the respective country of operation must be observed when using trucks with an LPG system.

Safety tests

The operating company is responsible for ensuring any defects are remedied without delay. In the event of defects, notify the authorised service centre.

3

Information about the truck

General forklift view

General front view

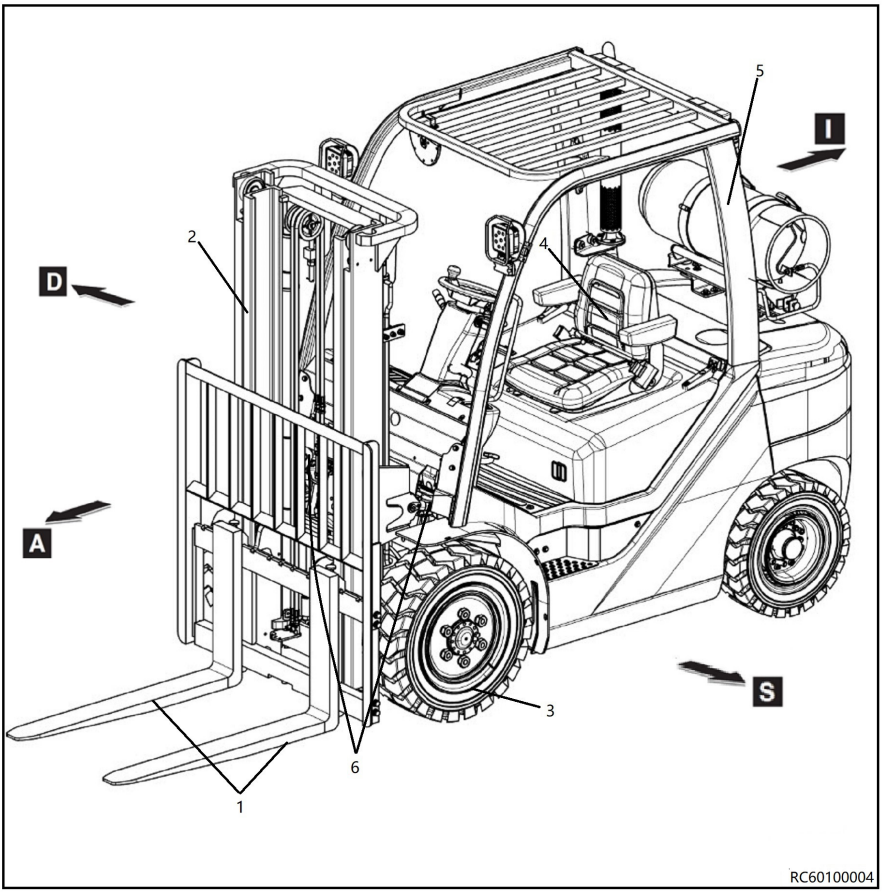

1-	Fork arms	6-	Tilt cylinder
2-	Mast	A-	Forward
3-	Front wheels	D-	Right
4-	Driver's Seat	I-	Backwards
5-	Overhead guard	S-	Left

General rear view

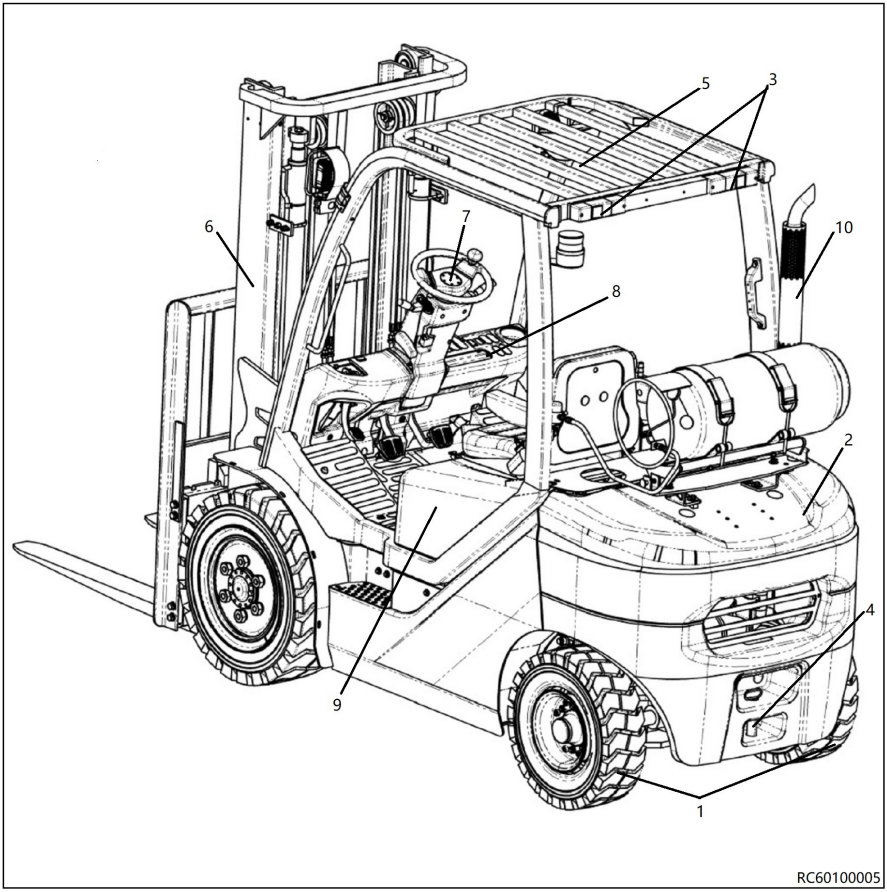

1-	Rear wheels	6-	Mast
2-	Rear weight	7-	Steering wheel
3-	Rear lights	8-	Control panel
4-	Trailer coupling	9-	Engine bonnet
5-	Overhead guard	10-	Exhaust pipe

Instrumentation and controls

Overview of the driver's compartment

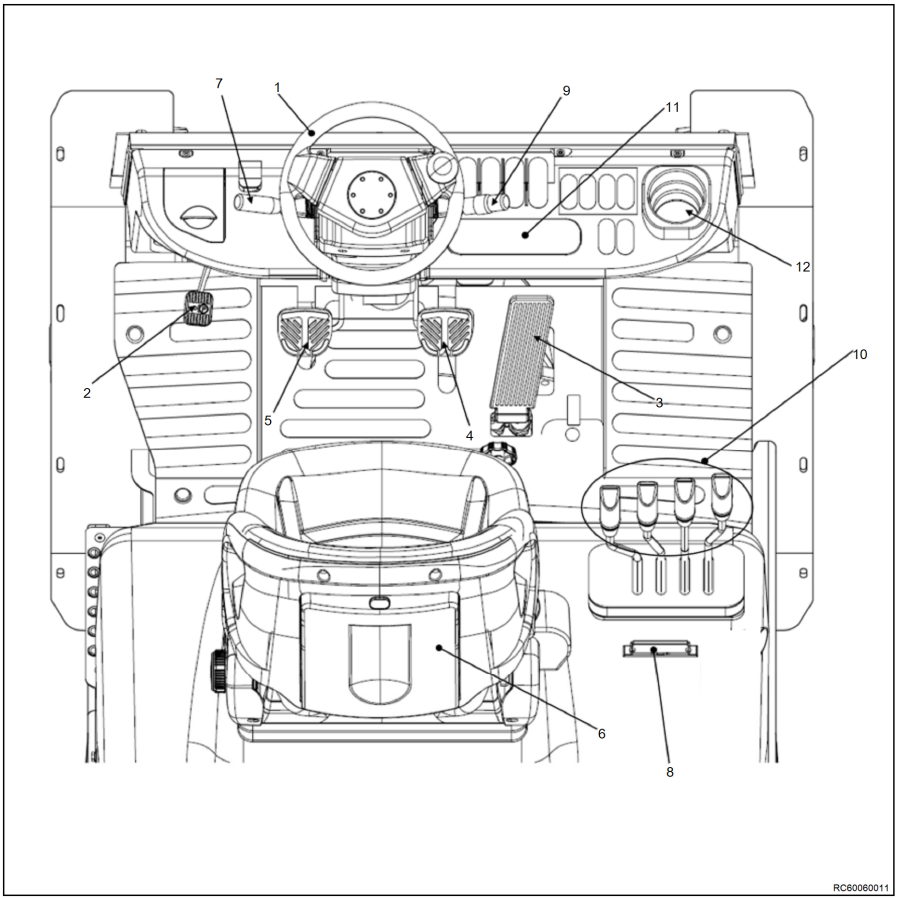

1	Steering wheel	7	Direction selection lever
2	Parking brake pedal	8	A4 paper folder
3	Accelerator pedal	9	Lighting and direction indicator switch
4	Driving brake pedal	10	Operating lever
5	Inching pedal	11	Display unit
6	Seat	12	Cup holder

Display unit

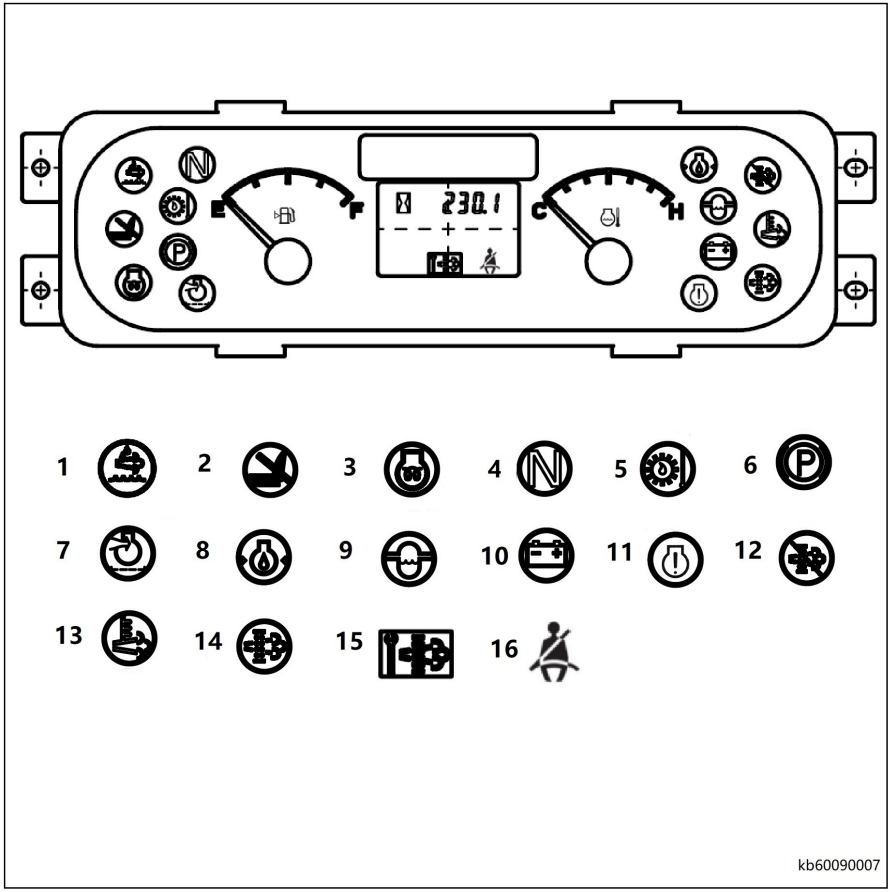

1 “SCR error” indicator light (Not use)
2 Seat indicator light
3 Indicator light for "glow plug preheating" (Not use)
4 Neutral Position indicator
5 “Torque Converter Oil Temperature” indicator light
6 “Parking brake” indicator light
7 “Clogged air filter” indicator light
8 “Engine oil pressure” indicator light
9 “Water separator light” indicator light (Not use)
10 “Battery charging” indicator light
11 "Engine error light" indicator light(Red light)
12 “DPF regeneration disabled” indicator light(Red light) (Not use)
13 DPF regeneration indicator light/Exhaust temperature warning light(Yellow light) (Not use)
14 “DPF regeneration request” indicator light(Yellow light) (Not use)
15 “Ash condition”indicator (Not use)
16 “Seat belt” indicator

Truck identification

Chassis number

The truck serial number is stamped on the lower crossmember of the chassis at the driver's step plate

Serial number

The serial number is used to identify the truck. The serial number is shown on the nameplate. Quote the serial number for all technical questions.

The serial number contains the following coded information:

1 Production location
2 Model
3 Year of manufacture
4 Sequential number

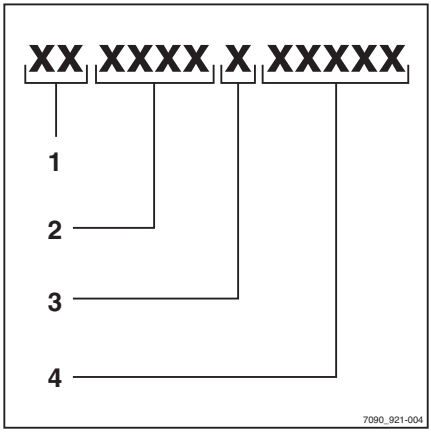

Nameplate

Variant 1: Industrial trucks built up to 12/2021

1 Model
2 Production number
3 Year of manufacture
4 Tare weight in kg
5 Max. permissible battery weight in kg (for electric forklift trucks only)
6 Min. permissible battery weight in kg (for electric forklift trucks only)
7 Ballast weight (only for electric trucks)
8 For more detailed information, refer to the technical data in the operating instructions
9 CE labelling
10 Rated drive power in kW
11 Battery voltage in V
12 Rated capacity in kg

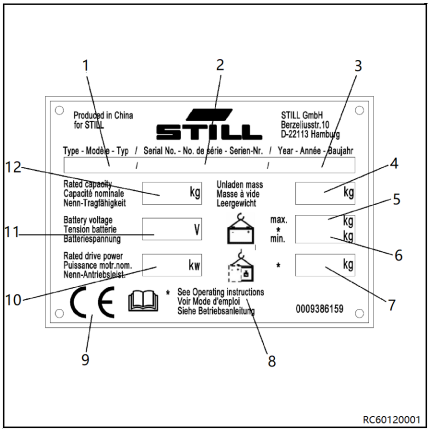

Variant 2: Industrial trucks built after 12/2021

▷

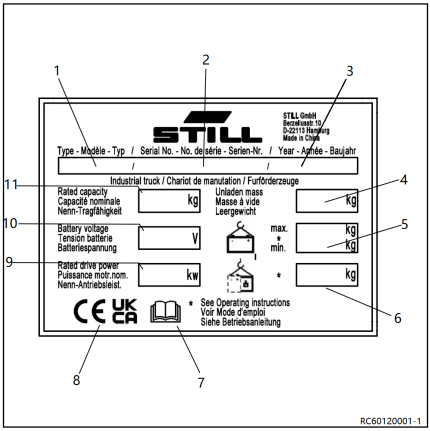

1 Model
2 Production number
3 Year of manufacture
4 Tare weight
5 Max. battery weight/ Min. battery weight (only for electric trucks)
6 Ballast weight (only for electric trucks)
7 For more detailed information, refer to the technical data in the operating instructions
8 Conformity marking: CE mark for the markets of the EU, the EU candidate countries, the EFTA States and Switzerland; UKCA mark for the United Kingdom market; EAC mark for the Eurasian Economic Union market
9 Rated drive power
10 Battery voltage
11 Rated capacity

NOTE

- *It is possible for there to be multiple conformity markings on the nameplate.*
- *The EAC mark may also be located in the immediate vicinity of the nameplate.*

UK-Importer

▷

Importer: STILL Materials Handling UK Ltd.
Jacks Way, Hill Barton Business Park, Clyst St Mary,
Exeter EX5 1FG

NOTE

This label is only for UK.

Engine plate

Engine rating plate

The engine type(A) and engine number (B) and performance data are stamped on the engine plate.

The engine type and number must be stated when purchasing spare parts.

The rating plate (C)is fixed to the cylinder head cover or crankshaft case.

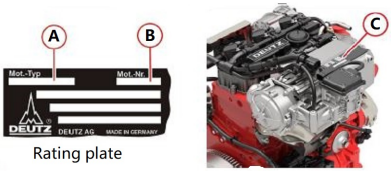

Rating plate

Position of the rating plate

RC60040002

Engine serial number plate

Engine serial number (D)is stamped onto the crankcase (arrow) and onto the rating plate.

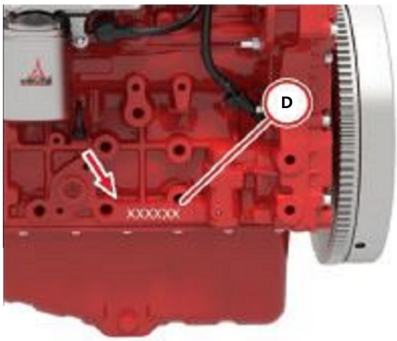

RC60040003

Three-way catalytic converter plate

The serial number of the exhaust aftertreatment components are stamped on the rating plates.

▷

Serial No. of the exhaust aftertreatment components

RC60040004

Location of the decals

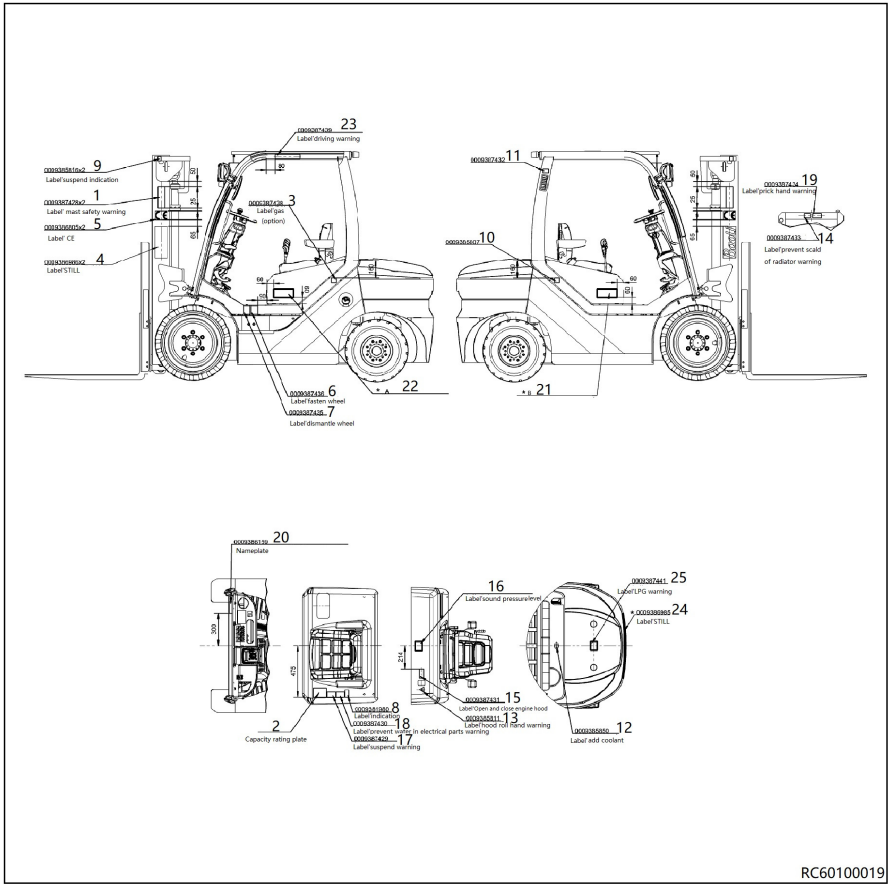

1	Warning sign: Mast safety warning
2	Decal information: Capacity rating plate
3	Decal information: Filling in gasoline (option)
4	Manufacturer's name
5	CE label
6	Decal information: Caution / Dismantle the wheel according to the instruction
7	Decal information: Caution / Fasten the wheel instruction
8	Decal information: Caution / Read the operating instruction
9	Decal information: Suspend indication
10	Decal information: Hydraulic oil tank
11	Decal information: Caution / No watering
12	Decal information: Adding coolant
13	Warning sign: Hood roll hand warning
14	Warning sign: Danger due to overheating of radiator
15	Warning sign: Danger due to shearing / Danger to the driver's head with engine hood not fully closed.
16	Acoustic power level
17	Warning sign: Read the operating instruction for lifting by lifting gear attachment point
18	Warning sign: Preventing water into the electrical parts
19	Warning sign: Prick hand warning
20	Nameplate
21/22	Model information
23	Decal information: driving warning
24	Manufacturer's name
25	Warning LPG

4

Use and Operation

Truck transport and lifting

Removing the mast

⚠ CAUTION

Mast removal and installation must be carried out by trained personnel.

Contact your authorised dealer.

Use a truck or flatbed trailer to carry the forklift truck

The truck is normally transported by road and rail complete with lift mast. If the truck's dimensions exceed the max. clearance size allowed, it is transported with mast disassembled.

The forklift must be secured to the transport means during transport using appropriate restraint systems .

– Lower the lift mast completely.

– Tilt the lift mast forward.

NOTE

The fork arms must be resting on the ground.

– Apply the parking brake as described in chapter entitled"Parking brake".

– Use two wedges to block each of the front and rear wheels to prevent rolling.

– Use ropes to secure the forklift truck on the truck. ▷

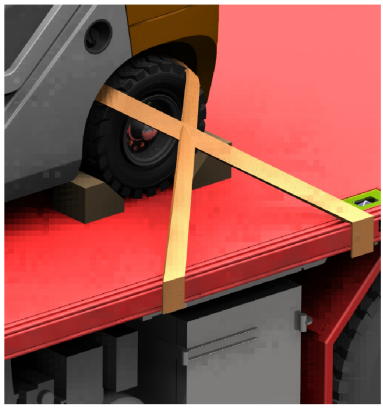

⚠ CAUTION

Also use ropes to secure the mast in the case that the mast shall be disassembled during the transport.

Environmental conditions for transport and storage

The forklift truck must be protected from the effects of the weather during transport and storage. In salty environments, appropriate protection must be provided.

Loading and unloading the truck

Use an inclined plane or a movable platform to load and unload the truck. If the truck is not operational, lift as described below.

⚠ DANGER

Use a crane with a suitable lifting capacity for the weight of the truck, indicated on its data plate. The lifting operations must be performed by qualified personnel. DO NOTstand within the crane's radius of action or under the raised truck. Use NON METALLIC slings. Make sure that the lifting capacity of the slings is suitable for the weight of the truck.

To raise the truck it is necessary to remove the LPG bottle and associated support.

⚠ DANGER

DO NOT SMOKE in the vicinity of the truck when removing the bottle and putting it back.

To remove the LPG bottle, proceed as follows:

- Open the bottle cover(1) by releasing the lever locks(2).
- Close the bottle valve(3).
- Disconnect the LPG system supply pipe(4) from the bottle valve or safety valve.
- Remove the bottle(5).
- Unscrew the screws(6) and remove the bottle support.

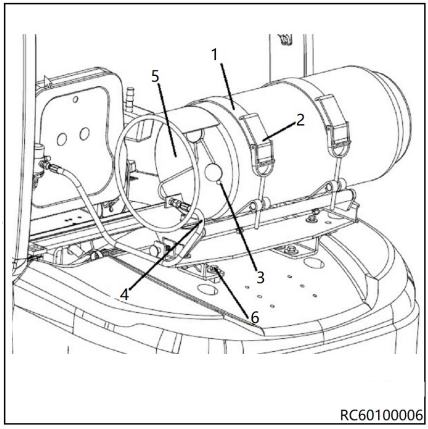

Lifting the truck with a crane

⚠ DANGER

When lifting the truck with a crane, there is a risk of accident and fatal injury if personnel are in the working area of the crane.

When using a crane to lift the truck, pay particular attention to ensure that no personnel are in the vicinity of the crane. Comply with the load capacity rating marked on the crane nameplate. Never walk under a suspended load!

⚠ CAUTION

Use a spreader and crane with sufficient load capacity to lift the truck. For the weight of the truck, see the manufacturer's nameplate.

NOTE

Before lifting the truck, fasten the slings to the given lifting points. These lifting points are not specifically marked on the truck.

- Lower the lift mast completely, and tilt it fully backwards.
- Remove the two rubber grommets(7) from the openings in the counterweight.
- Remove the counterweight grid(6).

- Attach a sling (2) (able to at least bear the weight of the forklift truck) ,enter from the original area of counterweight grid(7),come out from the two openings in the counter-weight.
- Attach two shackles (5) to the two openings in the upper beam of the outer lift mast.
- Attach a sling (3) (able to at least bear the weight of the forklift truck) to the two shack-les.
- Prevent the slings from rubbing against any sharp edges on the truck.
- Attach the ends of all the slings to the crane hook (1).

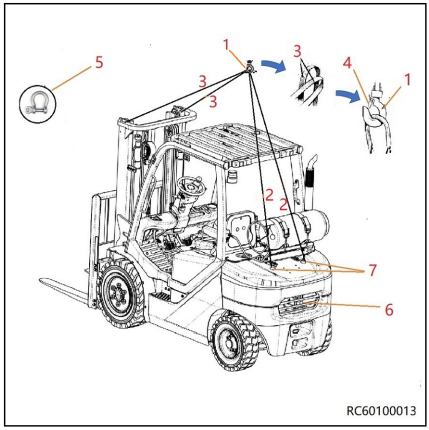

⚠ CAUTION

After hanging the slings from the lifting hook, the safety lock (4) must be fastened. The slings must not touch the overhead guard or any other installed equipment when the truck is being lifted.

⚠ DANGER

The overhead guard will be damaged if it is con-tacted by lifting equipment that is under tension from lifting. This can result in later failure of the overhead guard and the risk of severe injury or death. Ensure that no part of any lifting equipment contacts the overhead guard during lifting.

Commissioning the truck

⚠ CAUTION

Do not use the forklift truck before it has been com-missioned by a service engineer authorized by the manufacturer.

⚠ CAUTION

The forklift truck may be commissioned only by a service engineer authorized by the manufacturer.

Remaining ready for operation

Pre-shift checks

Carrying out the following checks as part of your daily routine will help to keep the fork-lift truck in good condition. These checks are supplemental and do not replace periodic maintenance work.

NOTE

If, when carrying out the daily checks, you discover a defect or you are unsure whether the truck will function properly, do not use the truck and contact the technical service department.

Checking the cap on the high-pressure relief valve on the outside of the LPG system

▷

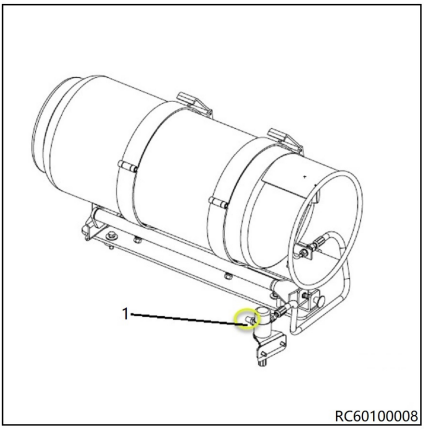

– Check that the cap (1) on the high-pressure relief valve is in place and intact. Check the cap (1) for any damage, holes or wear that may impair the correct operation of the valve.

⚠ DANGER

If the cap is missing or damaged, gas may escape uncontrollably.

In such cases, do not put the truck into operation. Close the bottle immediately and contact the authorised service centre.

Daily checks before use

The following checks must be performed on a daily basis in order to keep your truck in good condition and to operate safely. These checks supplement and do not replace the scheduled maintenance operations.

- Check the correct position and fastening, intactness and operation of the various safety components installed on the truck.
- Make sure that "seat switch" is working correctly.
- Check that the brakes work correctly, checking their travel and efficiency.
- Check the tyre pressure and wear conditions.
- Visually inspect wheels for correct tightness.
- Make sure that the lights work correctly (if applicable).
- Visually check that the chains are taut.
- Make sure that the start/stop key works correctly.
- Check that the fork arms are in good condition;
- Check that the fork arm control levers work correctly
- Check lubricating oil level and refill when necessary.

Remaining ready for operation

- Check engine coolant level and fill in if necessary.
- Check the cooling system for leaks and correct function
- Check engine for tightness (visually check for leakage).
- Exhaust system including exhaust after-treatment components for leaks
- Check brake oil level.
- Check the fuel level and clips
- Check transmission oil level.
- Check axle oil level.
- Check the validity of the fire extinguisher daily. If it approaches the expiring date replace it in time. Make sue the new extinguisher size is same as the original fire extinguisher, and install it on the fire extinguisher bracket(for the truck with fire extinguisher option)
- Check the structure of the overhead guard for no damage and transparent material forms the part of the overhead guard structure shall not exceed 20 mm vertical deformation. Otherwise it shall be replaced accordingly.

⚠ CAUTION

DO NOT use the truck, but call the technical service department, if you notice any malfunctions or if you have any doubts about its correct operation.

Seat belt status and performance checks

DANGER

For safety reasons, the condition and protective ability of the seat belt must be checked on a daily basis.

Do not operate the vehicle with the seat belt removed.

– Check the condition of the belt: pull the seat belt(1) all the way out of the retractor(2) and check the seat belt for damage. ▷

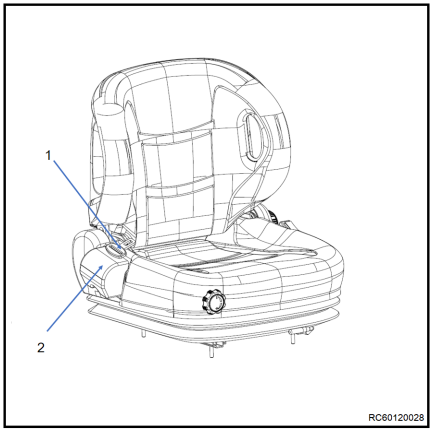

CAUTION

The seat belt must be replaced if it is cracked, worn or has been damaged in an accident.

– Carefully check the connection between the seat belt and the seat.

– Carefully check the connection between the seat and the panel cover below.

NOTE

Only when the driver sits on the seat, the forklift can be operated.

– Push the lever (1)on the front left-hand side of the engine bonnet upwards with your left hand. ▷

– Open the bonnet and raise it around 30°.

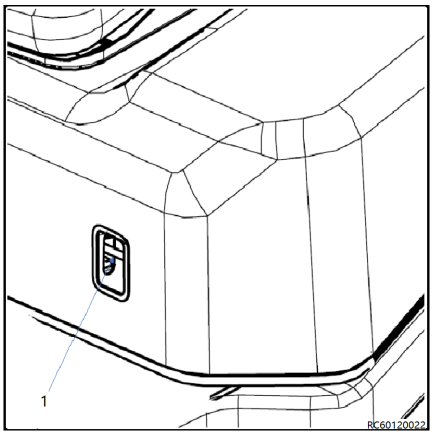

NOTE

The bonnet is held up by the gas spring.

– Try to pull the belt. The automatic blocking mechanism must not allow the belt (1) to come out of the retractor (2).

⚠ CAUTION

A warning sound will be activated when the operator leaves the seat without parking brake applied. The signal will sound even if the truck has been switched off and the key removed.

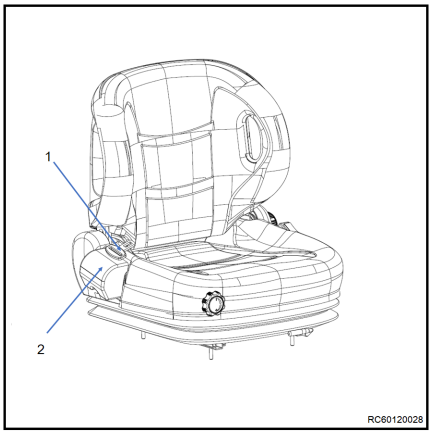

Checking the condition of the tyres

Superelastic tyres

Superelastic tyres must be changed before the profile reaches the maximum wear allowed. The maximum wear of the tyre manufacturer is indicated by a line on the side (1) along the circumference of the tyre.

⚠ DANGER

If the forklift truck is used on wet or slippery surfaces, replace the tyres before the thickness of the tread drops below 1 mm.

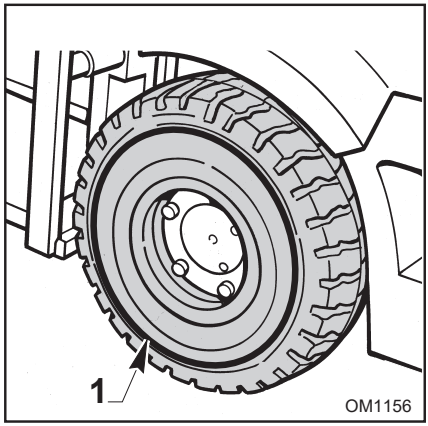

Check the wheel nuts for correct condition

– Visually check the markings in the wheel nuts and rims are correctly attached, re-tighten with torque spanner if necessary.

Tightening torque:

Front tyres (M14x1.5) : 181 N.m±10%

Rear tyres (M12X1.25): 113 N.m±10%

– Visually check if the column is deformed or whether the hole for the rim is larger, re-tighten with torque spanner if yes. Replace the rim when there is serious deformation.

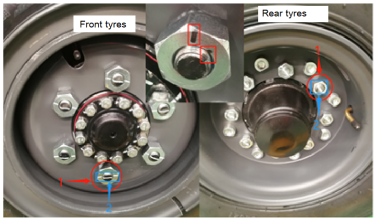

RC60060067

– If the markings are difficult to recognize, check if there is any gap (As the arrows show) between the joint face of the rims and nuts. Retighten with torque spanner if gap exits.

– Check the wheels and rims for wear and deformation, change the tyres if there is any deformation.

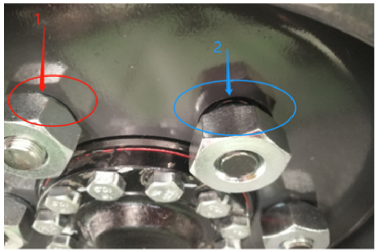

RC60060068

Check the condition and operation of chain

– Check load chains for any distortion before operation. ▷

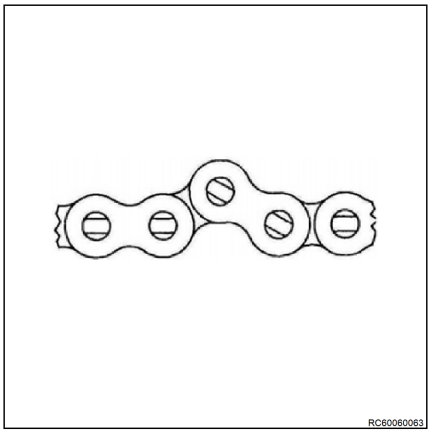

– Stop using the forklift immediately when the hinge pins of chain rotate before operation. ▷

– Lift and lower the lifting mast without load for one round to check the operation of lifting chain for any abnormal sound or block.

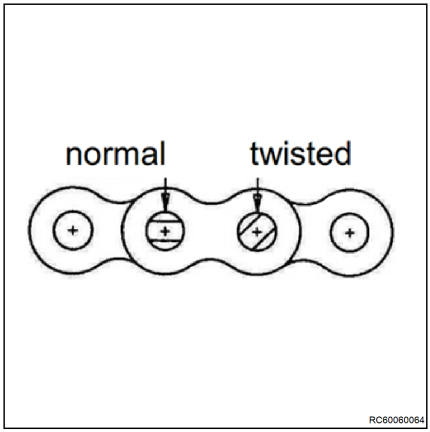

– Contact your authorised dealer if chains are suffering abnormal force. ▷

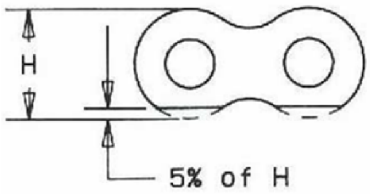

RC60060065

– Keep the chains clean, ensure no excessive dust exits; Immediately lubricate the chains with specified chain spay if chain surfaces are dry. ▷

RC60060066

⚠ CAUTION

For safety reasons, wear safety equipment while working at height.

NOTE

If the truck is used in the food industry, please use lubricating grease in place of spray.

– During operation or maintenance, stop using the forklift if there is any crack of chain plate.

Check the coolant level

⚠ DANGER

Risk of burns. When the engine is hot, the radiator is under pressure and hot coolant can spray out if the radiator cap is unscrewed.

– Check coolant level when the engine is cold and switched off. Only open the cap when cool!

⚠ CAUTION

Risk of engine damage! If there is cooling fluid missing, this indicates leakages in the cooling system.

Check the cooling system for leaks, such as from leaking hose clips.

– Remove the radiator water tank cover. ▷

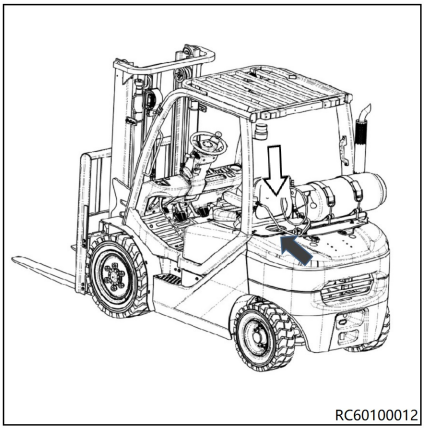

– Open the cooling system cap (1)carefully. ▷

– Check whether the radiator is filled to the top with coolant.

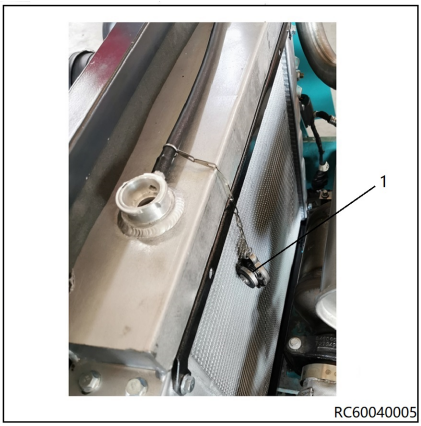

NOTE

To perform this check, the truck must be parked on a level surface.

– If necessary, add coolant in line with the specifications given in the chapter entitled "Supply table".

– Screw the radiator cap (1) back on securely.

– Frequently check the coolant level in the radiator tank.

– Make sure the coolant level is sufficient.

– Replenish it if there is insufficient coolant in the radiator tank.

Check the engine oil level

NOTE

Lack of lubricating oil or overfilling lead to engine damage. The lubricating oil level may only be checked when the engine is horizontal and switched off. Only check lubricating oil level whilst warm, 5 minutes after shutting down.

WARNING

Be careful with hot lubricating oil. Danger of scalding!

Do not pull out the dipstick while the engine is running. Danger of injury!

- Open the bonnet.
- Pull out the lubricating oil dipstick (1)and wipe off with a lint-free, clean cloth.
- Insert the lubricating oil dipstick(1) as far as it goes.
- Remove the lubricating oil dipstick and read the lubricating oil level.
- The lubricating oil level must always be between MIN- and MAX-1 markings! If necessary, fill up to MAX-marking.
- Fully re-insert the dipstick.

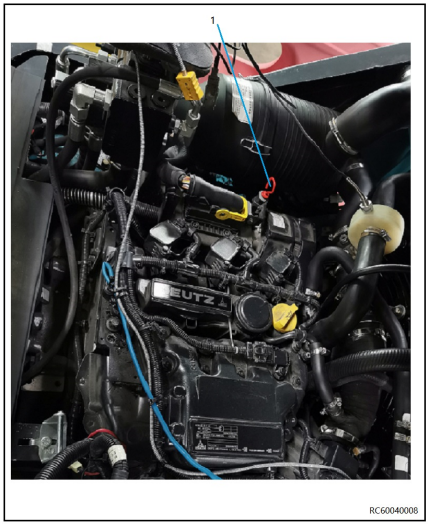

– Close the bonnet.

⚠ CAUTION

Risk of engine damage!

Insufficient engine lubrication can cause engine damage. An insufficient oil level or the use of engine oil with different specifications can lead to the failure of engine lubrication.

– – Only use engine oil in line with the supply table.

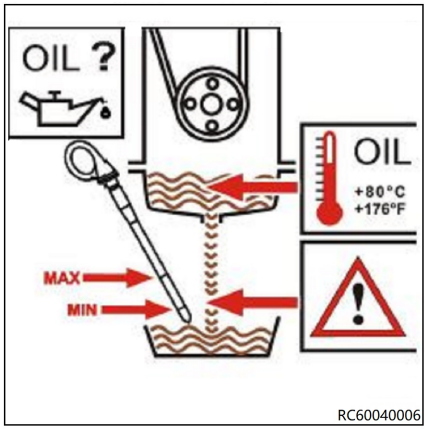

Check the brake fluid level

– Turn off the power to the forklift truck.

– Check the brake oil container. The brake fluid level must be above the minimum mark. Unscrew the cap of the brake oil container and add more brake fluid as necessary to avoid brake failure. Please refer to recommendations to ensure that the correct brake fluid is used.

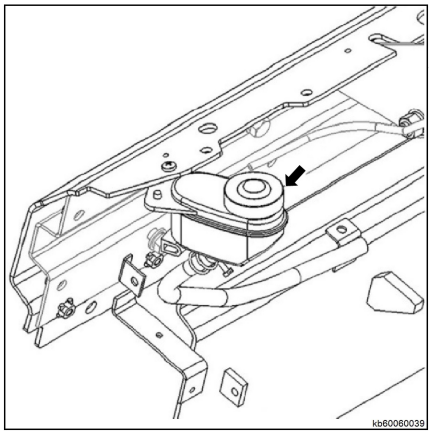

NOTE

If there is a large loss of brake fluid, please contact your authorised dealer.

⚠ DANGER

Do not allow dust to get into the brake oil container. Even a small amount of dust may have bad effect on normal braking.

Check the small vent hole in the brake oil container frequently to make sure that it is not clogged with dust.

Transmission oil level inspection procedure ▷

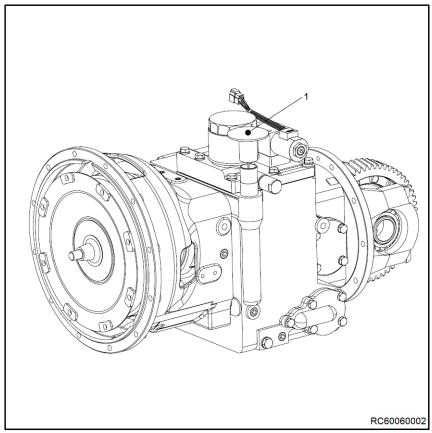

NOTE

Check the transmission level with the transmission in neutral, the oil hot (at least 40°C) and with the truck on level ground.

- Ensure the forklift truck is stopped on a level surface.
- Remove the bottom plate.
- Run the truck in neutral for 3-5 minutes.
- Take out the dipstick(1)and wipe with a clean cloth.
- Fully reinsert the dipstick.
- Take out the dipstick. The oil level should be between the upper and lower marks on the dipstick scale. If necessary, add transmission oil via the oil inlet.
- Fully reinsert the dipstick.

DANGER

Take care not to touch moving parts during this operation.

Checking the drive axle gearbox oil ▷

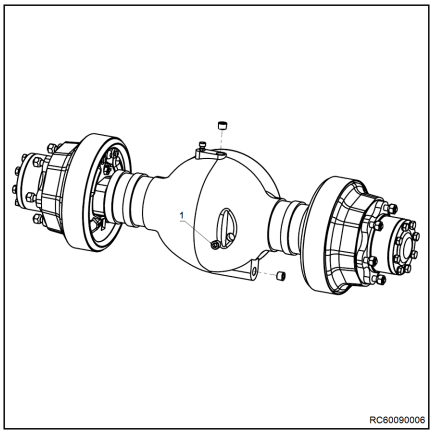

- Unscrew the oil plug at the oil level aperture(1).
- Check the gear shaft oil level to ensure it is near the observation aperture position(around 15mm).
- If necessary, fill the drive axle with gear oil until oil flows out of the oil level aperture.

NOTE

Please refer to the chapter on replacing the drive axle gearbox oil for steps to take when adding gear oil.

Checking the hydraulic oil level

ENVIRONMENT NOTE

Please follow the instructions for handling/disposal of fluids and lubricants.

NOTE

The oil level should only be checked with the lift mast vertical and the fork carriage lowered.

– Apply the parking brake.

– Open the engine cover.

– Screw the oil cap with dipstick.

– Use a clean cloth to dry the dipstick(1) ▷

– The oil level should be between the upper and lower markings on the dipstick.

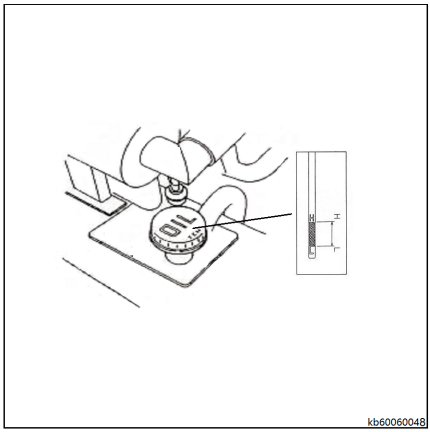

WARNING

The hydraulic oil must be checked while the engine is stopped and the forklift is in horizontal level,

– When required, fill the hydraulic oil up to the upper marking.

– Re-fit the oil dipstick.

– Safely refit the engine cover.

Change the LP-gas tank

WARNING

The inspection intervals mandated by the pressure vessel regulations must be adhered to. The last inspection date marked on the LPG tank is the expiry date. LPG tank with an expired inspection date must not be taken into operation.

NOTE

Observe the safety regulations for LP-gas vehicles. Gas tank may only be changed by trained staff.

⚠ WARNING

Do not smoke when changing gas tank and extinguish all naked lights and fires.

Change LP-gas tank only in well-ventilated spaces and not in the vicinity of pits.

Shut off the engine and heater with combustion chamber, if installed, and allow them to cool down.

⚠ CAUTION

When the LPG hose is disconnected, a small amount of gas leaks out. This gas can cause freezing of the skin,. Always put on protective gloves.

– Don't stop the engine.

– Close the shut off valve (1) on the gas tank tightly. ▷

– Until the engine nature stop without fuel and then stop engine by turn the switch key.

– Loosen the union nut (2) carefully a little bit and only for a short time (pressure reduction).

NOTE

The union nut has a left-hand thread.

– Unscrew the union nut fully and remove the hose.

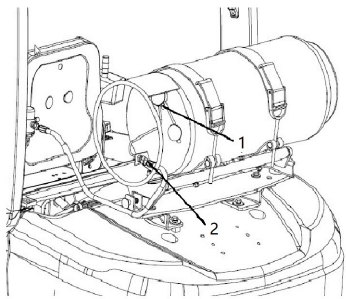

RC60100001

– Pull the bolt (1) and fixure.
– Open the clip (3).

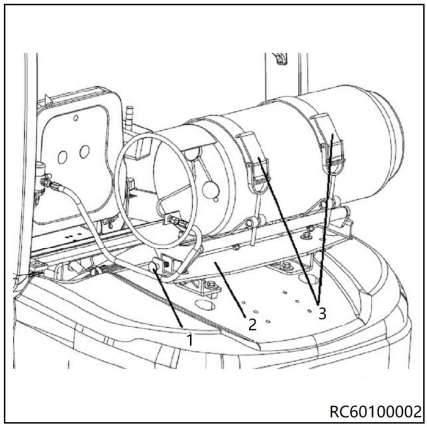

– Swing the top section of the bottle holder (2) up .
– Replacing the empty gas tank need two persons .

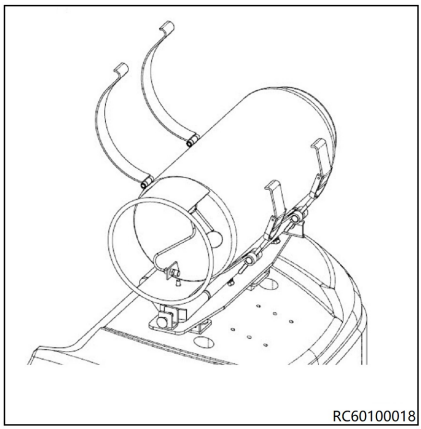

NOTE

Secure the LPG bottle in the holder so that the connecting fitting of the shutoff valve on the gas bottle faces towards the bottom.

Replacement bottles according to GB 17259-2009,

CAPACITY

– Replacement bottle : 15 kg
– Reconnect the hose as specified.
– Check for leaks with leakage spray according to the inspection and maintenance instructions.

Fill the LPG tank*

⚠ WARNING

Before connecting the filling pistol, check that the LP-gas tank or the instruments are not defective and that the safety inspection of the tank has not yet expired.

The inspection intervals mandated in the pressure vessel regulations must be observed under all circumstances.

The last inspection date marked on the LPG bottle is the expiry date. LPG bottles with an expired inspection date must not be taken into operation.

Do not fill the tank if serious defects are found or the inspection date has expired.

NOTE

- *Observe the safety regulations for the use of LP-gas and the safety instructions of the LPG station.*
- *The LPG tank may only be filled by qualified persons.*

⚠ WARNING

No smoking and no naked lights and fires when filling LPG tanks.

⚠ CAUTION

While removing the filling pistol a small quantity of gas streams out. As this can cause frostbite, always put on protective gloves.

NOTE

We recommend to top up gas before beginning work, as long as the truck is still cold. If temperatures differ much between the supply tank in the open and the tank on the truck it may be possible that the supply pressure of the pump is not sufficient to fill the tank completely.

⚠ WARNING

When LP-gas leaks out, there is an immediate danger of explosion, resulting in the risk of burns.

Fill the LPG tank*

- Stop the engine and, if needed, the heater and combustionchamber.
- Put on protective gloves.
- Close the shutoff valve (1).
- Remove the cap from the filler valve (4).
- Open the shutoff valve (3)
- Check the filling pistol thread for cleanliness.
- Connect the filling pistol to the filler valve (4).
- Open the main shutoff valve of the LPG station and operate the pump motor or filling pistol until the valve installed in the tank stops the filling.

Capacity : approx. 35,0 litres

- Release the filling pistol control immediately and terminate the filling procedure.
- Turn off the pump motor and the main shutoff valve at the LPG station.

⚠ CAUTION

The LP-gas tank may only be filled until the metering valve shuts off and not according to the reading on the fuel level gauge (2).

- Carefully remove the pistol from the filler valve (4).
- Screw the cap on the filler valve.

⚠ CAUTION

If problems or special incidents occur during the filling procedure, notify the responsible persons and have the faults corrected.

- Perform a leak test with leakage spray according to the inspection and maintenance instructions.

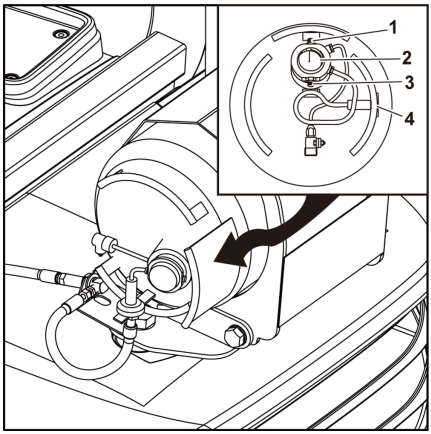

* Option

Fuel- LPG(liquefied gases)

The operational safety and durability of the engine can only be guaranteed if liquid gases are used in accordance with the following specifications:

– EN 589 (EU)

– DIN 51622

– ASTM D 1835 (US)

– GB 19159 (China)

Minimum propane content (C_3-hydrocarbons):20%

The warranty is excluded when using other liquid gases which do not meet the requirements of this operation manual. The certification measurements for compliance with the legal emission limit values are carried out with the test fuels specified in the laws. These correspond to the liquid gases described in this operating manual according to EN 589 and ASTM D 1835.

⚠ CAUTION

The respective fuels prescribed by law must be used to comply with the national emission regulations (e.g. sulphur content).

Please contact your authorized dealer.

Winter operation with liquefied gases

Special demands are placed on the cold behaviour (vapour pressure) for winter operation. In this case, corresponding liquid gases with a high to very high propane content (C_3-hydrocarbons) must be used.

Engine coolant specifications

⚠ CAUTION

Never operate the engine without coolant, not even briefly!

In liquid-cooled engines, the coolant must be conditioned and monitored, otherwise the engine could be damaged by:

- corrosion
- Cavitation
- freezing
- overheating

Water quality

The right water quality is important for conditioning the coolant .Clear, clean water should always be used:

Cooling system protective agent

⚠ CAUTION

Health damaging nitrous amines form when nitrite-based cooling system corrosion protection agents are mixed with aminebased agents!

ENVIRONMENT NOTE

Cooling system corrosion protection agents must be disposed of in an environmentally friendly way.

The coolant is conditioned for liquid-cooled DEUTZ compact engines by mixing an anti-freeze with corrosion protection inhibitors on an ethylene-glycol base with the water.

Products released are recorded according to the following DEUTZ cooling system protection specifications.

DEUTZ cooling system corrosion protection agent	
Specifications	Remarks
DQC CA-14	siliceous on the basis of MEG
DQC CB-14	This cooling system corrosion protection agent is free from nitrite, amine and phosphate and is adapted to the materials in our engines.
DQC CC-14	free of silicates on the basis of organic acids (OAT) and MEG

The DEUTZ cooling system protection agent corresponds to quality class DEUTZ DQC CB-14.

This cooling system corrosion protection agent is free from nitrite, amine and phosphate and is adapted to the materials in our engines.

If the DEUTZ cooling system corrosion protection agent is not available please contact your authorized dealer.

The cooling system must be monitored regularly. This also includes checking the coolant system corrosion protection agent concentration in addition to checking the coolant level.

The control of the concentration of the cooling system protection agent can be done using the Refractometer.

Cooling system corrosion protection agent percentage	Water percentage	Cold protection up to
min.35 %	65%	-22°C
40%	60%	-28°C
45%	55%	-35°C
max.50%	50%	-41°C

At temperatures below -41 °C, please contact authorized dealer.

It is possible to use other cooling system corrosion protection agents (e.g. chemical corrosion protection agents) in exceptional cases. Consult authorized dealer.

Using the truck

Opening the tap of the gas bottle or gas tank

⚠ DANGER

After the truck has been shut down in a closed room for a lengthy period, ventilate the room well before turning on the electrical system.

Slowly and carefully open the tap of the gas bottle or gas tank.

⚠ DANGER

The opening and closing of the tap must be carried out without the aid of any tools in order to avoid the risk of explosions due to sparks.

Opening the gas cylinder or LPG tank* shutoff valve

⚠ WARNING

If the truck has been parked in an enclosed space for a long time, ventilatewell before switching on the electrical system.

– Slowly open the shutoff valve (1) of the liquefied gas cylinder or the LPG tank with caution. ▷

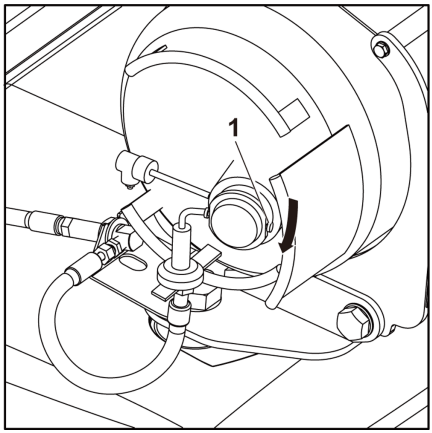

Climbing on/off the forklift

After performing the daily checks, carry out the following operations to use the truck. ▷

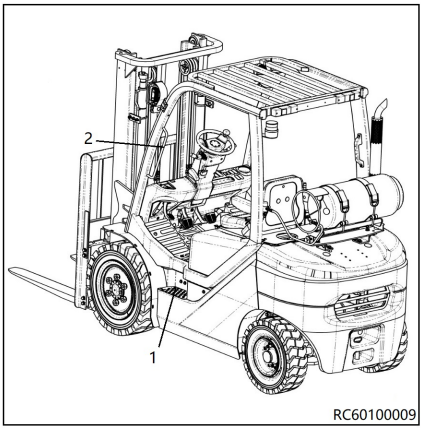

⚠ CAUTION

Always face the vehicle when dismounting the forklift, in order to prevent injury to the legs and back.

NOTE

Do not grip the steering wheel or joysticks when climbing on /off the forklift.

– First place your left foot on the step(1). Grip the handrail (2)or overhead guard beam and climb on the truck from the left-hand side.

– Use the step and handrail or overhead guard beam to climb off from the left-hand side.

⚠ CAUTION

Do not climb on or off the truck from the right hand side unless it is an emergency.

Seat belt and performance checks

⚠ DANGER

For safety reasons, the condition and protective ability of the seat belt must be checked on a daily basis.

Do not operate the vehicle with the seat belt removed.

⚠ CAUTION

Carefully check that the retractor locking device, the seat belt locking device and the connections between the seat belt/seat and the seat/cover panel are all in good condition.

– Check the state of the seat belt by pulling it all the way out of the retractor and checking for damage.

⚠ CAUTION

The seat belt must be replaced if it is cracked, worn or has been damaged in an accident. When replacing a seat belt, the entire protection system must also be replaced, including the seat belt, latchplate, retractor and locking mechanisms.

- Check the latch locking mechanism: insert the latchplate of the seat belt into the latch until you hear a click. Make sure that locking mechanisms such as latchplates and latches are working properly.
- Carefully check the connection between the seat belt and the seat.
- Carefully check the connection between the seat and the panel cover below.

Adjusting the seat and seat belt

⚠ CAUTION

An incorrect seat setting may cause damage to the driver's back.

The adjustment controls for the driver's seat should not be used during operation.

Before starting the truck and whenever changing drivers, adjust the seat to correspond to the driver's weight and make sure that the settings have all engaged properly.

Do not place any objects in the driver's working area.

Adjusting the seat

– Pull the adjustment handle (1) up to horizontally adjust the seat.

– Slide the seat to find the best operating position relative to the steering wheel, the accelerator and brake pedals, and the joystick.

– Retract the adjustment handle (1).

– The position of the backrest can be adjusted by lifting the handle (2) upwards.

– Adjust backrest in turn until the driver finds the best sitting position.

– Release the handle (2).

▷

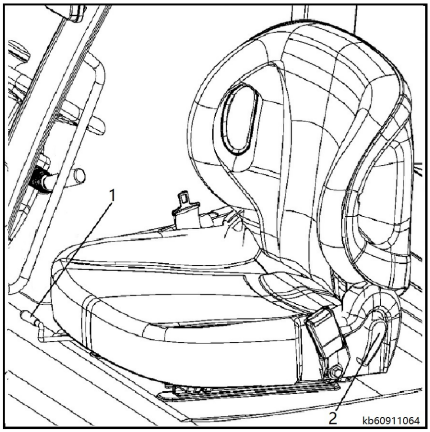

NOTE

Long periods sitting down will put excessive pressure on the spine; take regular gentle exercise to protect the back.

Fastening the seat belt

DANGER

Even when using an approved restraint system, there is some residual risk that the driver might be injured if the truck tips over.

This risk of injury can be reduced through the combined use of the restraint system and the seat belt.

In addition, the seat belt protects against the consequences of rear-end collisions and falling off a ramp.

– We therefore recommend that you also use the seat belt.

DANGER

Only bracket doors or full cabs with closed, sturdy doors constitute a driver restraint system. PVC doors (weather protection) are not a restraint system!

If the doors are open or have been removed, you must use an alternative suitable restraint system (e.g. a seat belt)!

Fastening the seat belt

⚠ DANGER

Risk to life when driving without a seat belt!

If the truck tips over or crashes into an obstacle and the driver is not wearing his seat belt, he can be hurled out of the truck. The driver could slide under the truck or collide with an obstacle. There is a risk to life!

- Fasten the seat belt before every trip.
- Do not twist the seat belt when fastening it.
- Only use the seat belt to secure one person.
- Have any malfunctions repaired by authorised dealer.

- Pull the seat belt (2) out of the belt retractor without jerking and fasten closely around the body over the thighs. ▷

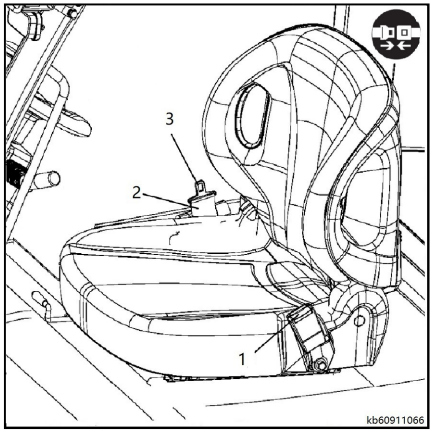

NOTE

Sit as far back as possible so that your back is leaning against the seat backrest. The automatic blocking mechanism permits sufficient freedom of movement on the seat.

- Insert the belt tongue (3) into the seat belt socket (1).
- Check the tension of the seat belt. The belt should fit closely around your body.

Fastening on a steep slope

The automatic blocking mechanism prevents the belt from being extended whenever the truck is on a steep gradient. It is no longer possible to pull the seat belt out of the belt retractor.

- Move away carefully on the slope.
- Fasten the seat belt.

Releasing the seat belt

– Push the red button (4) on the socket (1). ▷

– Manually guide the belt tongue slowly back to the retractor.

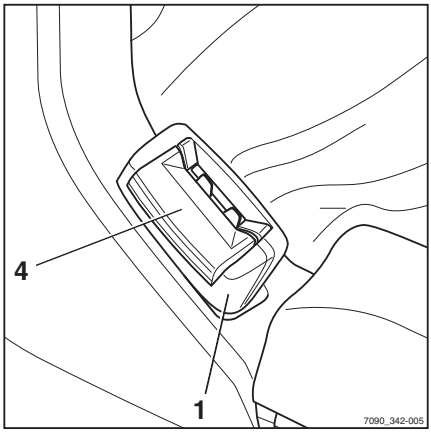

NOTE

Do not allow the seat belt to retract too quickly. The automatic blocking mechanism may be triggered if the belt tongue strikes the housing. It will then no longer be possible to pull the seat belt out with the usual force.

– Using increased force, pull the seat belt around 10-15 mm out of the retractor to disengage the blocking mechanism.

– Slowly allow the seat belt to retract again.

– Protect the seat belt from dirt (for example, by covering it).

Malfunction due to cold weather conditions

– If the buckle or belt retractor is frozen, thaw them out and dry them thoroughly to prevent recurrence.

⚠ CAUTION

Do not subject buckle or belt retractor to excessive heat when thawing out.

– Do not use air warmer than 60 °C when thawing out!

Seat belt monitoring and alarm function

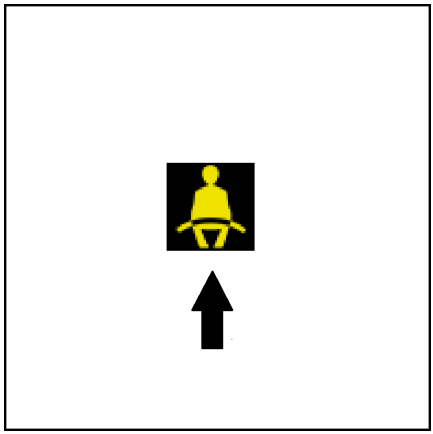

DANGER

The driver must sit in the driver's seat when operating the forklift truck.

The seat belt must be worn at all times that the truck is driven!

If the forklift truck is started without fastening the seat belt, the LED light shown by the arrow will flash on the display unit and the driver will be warned acoustically within 30s after switch-on of the truck.

NOTE

This function is only applicable for CE certificated forklifts.

Adjusting the steering column

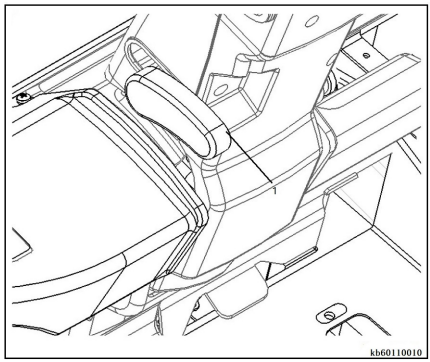

DANGER

Only adjust the steering column when the truck is stationary.

Angle adjustment

- Pull down the handle(1) clockwise.
- Move the steering column into the required position.
- Pull back the handle anti-clockwise to its original position.

Ignition device ▷

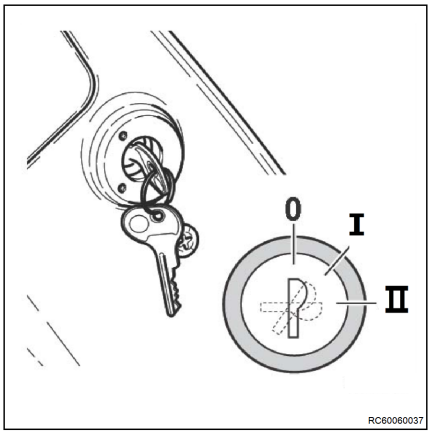

NOTE

The forklift can only be started if the reversing lever is in the centre position (neutral).

The ignition key has three positions:

Position "0"

- Key removal position (no circuit powered except for horn, stop lights; seat and ISO PCB)

Position "I"

- All circuits are powered

Position "II"

- Engine starting position

Start-up

– To start the engine, insert the key, turn it to position "II" and release it as soon as the engine starts (the key will go back to position "I").

Lighting and turn indicator switch ▷

The turn indicator and the lighting are active if the ignition key is in position "I".

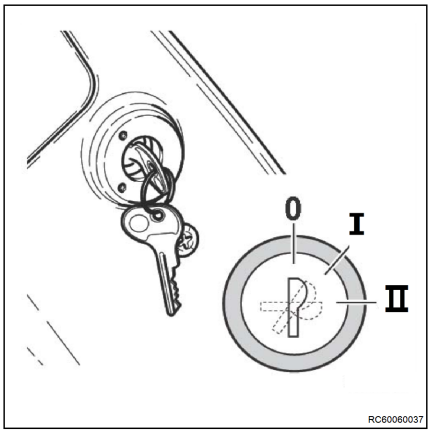

Direction indicators

– When the lever (1) is moved into position "R", the right indicator light lights up.

– When the lever (1) is moved into position "L", the left indicator light lights up.

R	Turn Right
N	Neutral
L	Turn Left

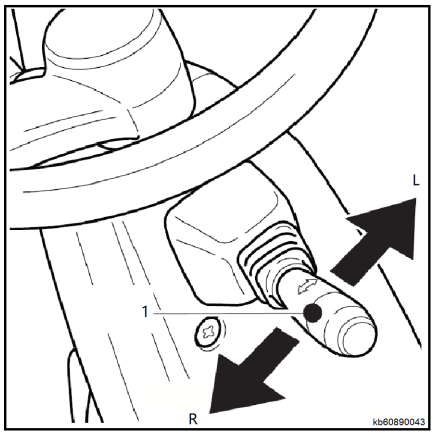

Lighting

– The lighting is switched on by turning knob (3) on the lever:

- Turning the knob to the first click switches on the clearance lights;
- Turning the knob until the second click switches on the clearance lights, front headlights, and also rear lights.

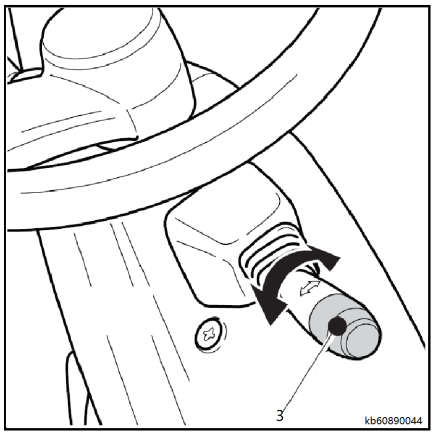

Lamp switch	0(OFF)	1st	2nd
Clearance lamp	OFF	ON	ON
Front headlights	OFF	OFF	ON
Rear combination lights	OFF	OFF	ON

Warning horn;

The horn allows the driver to draw attention to his and his truck's presence if necessary.

– Press the button (1) in the centre of the steering wheel to actuate the horn.

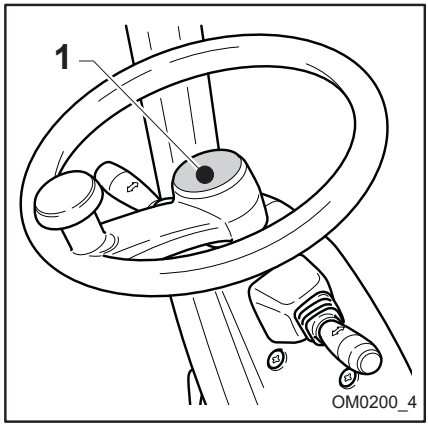

Direction selection lever

Direction selection lever (1) is used to select the required drive direction of the truck or to switch the drive mode to idling. The direction selection lever offers three different positions:

- **FORWARDS** — direction selection lever pushed forwards into position "A"
- **NEUTRAL** — direction selection lever in centre position between "FORWARDS" and "REVERSE"
- **REVERSE** — direction selection lever pulled backwards into position "B"

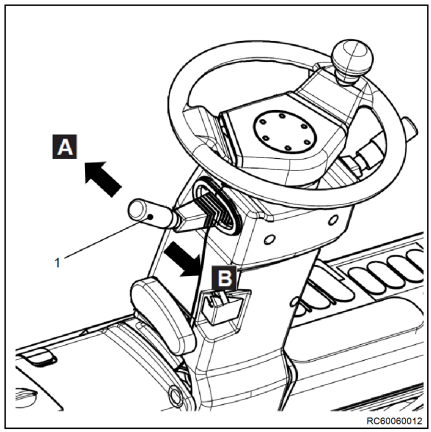

Start the engine

– Sit in the driver's seat and fasten the seat belt. Ensure that the cab doors or the driver restraint system installed on the truck is closed.

– Ensure that the direction selection lever (if present) is in the central position (neutral).

– Insert the switch key (1) and turn it to position "**II**". Release the switch key as soon as the engine starts.

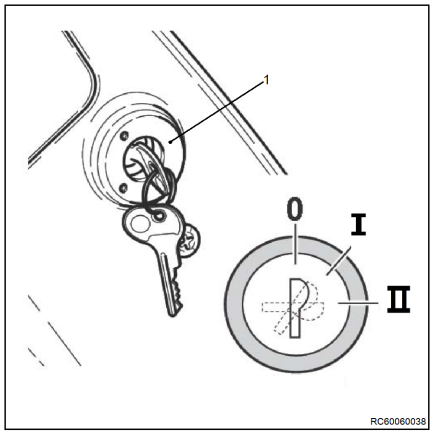

NOTE

If the engine does not start, stop the starting procedure and try again later. Wait at least one minute between start attempts in order to avoid running down the battery. If the engine still does not start after three attempts, do not try to start the engine again. Instead, contact your authorised service centre.

DANGER

Risk to health from exhaust gases! Exhaust gases from internal combustion engines are harmful to your health. In particular, the soot particles contained in the diesel exhaust gas can cause cancer. Letting the engine idle poses a risk of poisoning from the CO, CH and NO_x components contained in the exhaust gas.

Modern exhaust gas treatment systems (e.g. catalytic converters, particle filters or comparable systems) can clean exhaust gases in a way that reduces the health hazard and risk of poisoning when operating the truck.

– Observe the national laws and regulations when using trucks with an internal combustion engine in entirely or partially enclosed working areas.

– Always ensure sufficient ventilation.

DANGER

Risk to health from exhaust gases!

Do not leave the truck with the engine running in order to warm up the engine. Warm up the engine by using the truck at a low speed for a few minutes.

Driving

CAUTION

When using mirrors, ensure that the rear-view mirror is only used for monitoring the traffic behind the vehicle. Reverse travel is therefore only permitted when looking directly behind you.

⚠ CAUTION

Always tilt the mast backwards and lower the fork arms to the ground around 30cm.

⚠ CAUTION

Check the safety around the forklift and sound the horn before starting the truck.

NOTE

The drive functions of the truck are only activated when the driver's seat is occupied.

– Sit in the driver's seat and fasten the safety belt.

– Release the parking brake (1) , and the corresponding LED(2) will turn off. ▷

– Start the engine.

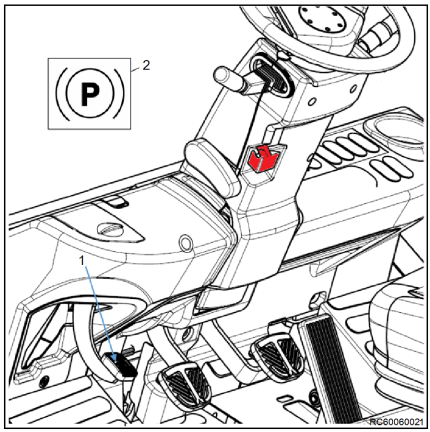

– Move direction selection lever (3) in the required drive direction: (A) FORWARDS, (B) BACKWARDS. ▷

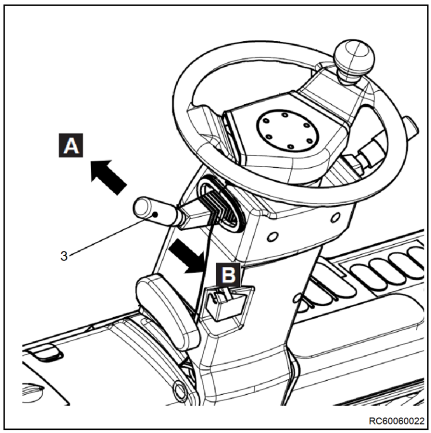

– Gently press the accelerator pedal(4) to set off. ▷

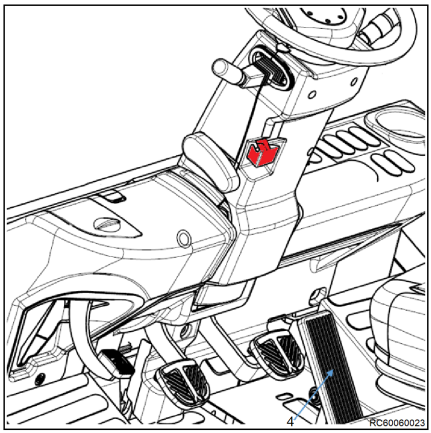

Changing direction of travel

– To change direction, release the accelerator pedal (1) . ▷

– Press the service brake pedal (2) until the truck comes to a complete stop.

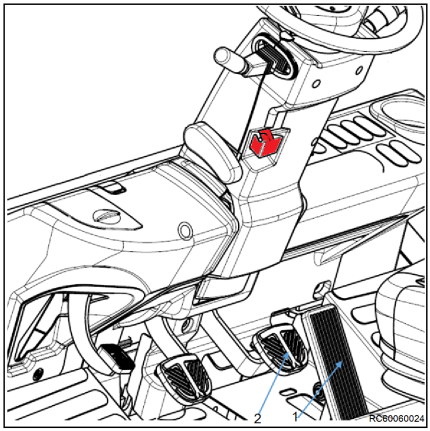

– Move the lever (3) in the opposite direction of travel: (A) FORWARDS, (B) BACKWARDS; then press the accelerator pedal (1) . ▷

The forklift truck will now accelerate in the new drive direction.

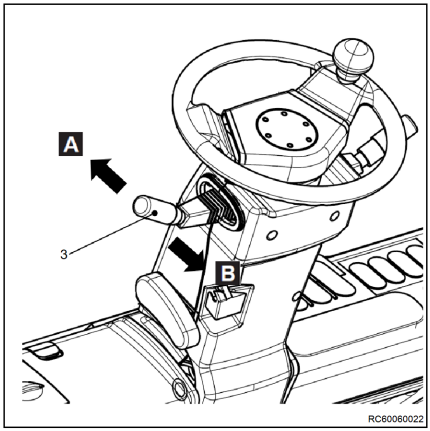

⚠ DANGER

Using operating lever to directly reverse the operating direction of the forklift truck during operation is strictly prohibited. Reversing direction during operation will result in damage to the forklift truck.

Driving brake pedal and inching pedal ▷

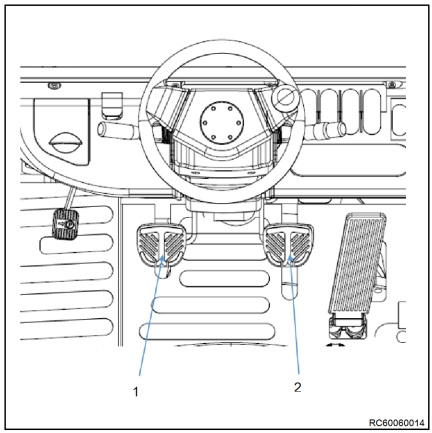

NOTE

We recommend that the driver familiarizes himself with the efficacy of the braking apparatus when the forklift truck is not carrying a load. Operate the forklift truck slowly on an uncrowded road surface to test travelling functions.

Driving brake pedal

Press the brake pedal(2)to slow or stop the truck. At the same time, the brake lights come on.

Inching pedal

– If the inching pedal (1) is depressed, the engine is disengaged at the beginning of the pedal travel. The service brake begins to grip when the pedal is depressed further.

– Small, precise movements of the truck are possible when you actuate the inching pedal (1) lightly if the accelerator pedal is actuated as well. Actuate the pedal (1) in order to move the truck gradually, even if the engine is running at full capacity.

Operating the service brake

Braking and stopping

⚠ DANGER

At speeds that are too high, there is a danger that the truck could slip or overturn!

The braking distance of the truck depends on the weather conditions and the level of contamination on the roadway. Note that the basic braking distance increases with the square of the speed.

– Adapt your driving and braking style to suit the weather conditions and the level of contamination on the roadway.

– Always choose a driving speed that will provide a sufficient stopping distance.

– Take the foot off the accelerator pedal (1). ▷
– Press the brake pedal (2) until the truck is stationary.
– Actuate the parking brake to keep the fork-lift truck braked.

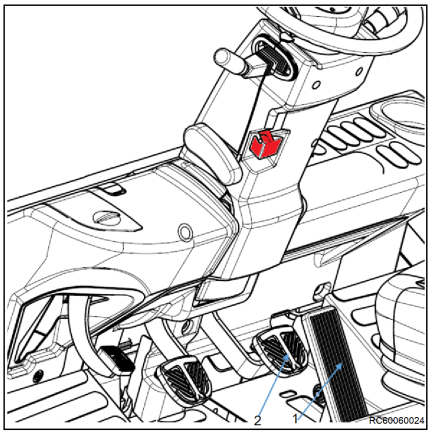

Procedure in the event of failure of the service brake

– Bring the truck to a standstill by actuating the parking brake and park it securely.
– Do not operate the truck again until the service brake has been repaired and is functional.

Parking brake ▷

The parking brake must be actuated every time the driver exits the truck.

- To actuate the parking brake, press the parking brake pedal(1) with foot. The corresponding indicator light on the display unit illuminates.
- Pull the locking switch(2) to release the parking brake pedal,

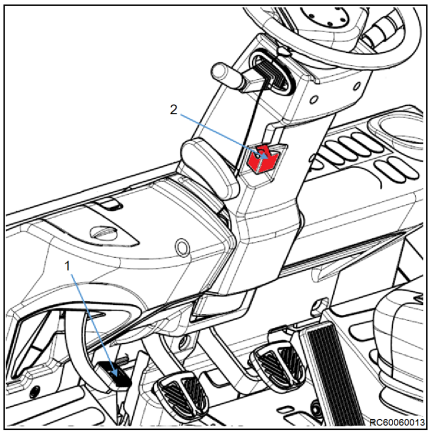

NOTE

If the driver exits the truck without actuating the parking brake, a warning signal sounds. This signal even sounds if the truck has already been switched off and the ignition and stop key has been removed.

Closing the gas cylinder or LPG tank* shutoff valve

– Close the gas cylinder or LPGtank shut off valve (1) tightly immediately after stopping the engine.

– Remove the key when you leave the truck.

– When it is freezing park the truck as far as possible in closed rooms, e.g. garages, because liquefied petrol gas evaporates sufficiently at temperatures over -5 °C (propane), respectively +5 °C (propane/butane) to start the engine.

⚠ CAUTION

Do not park the truck in halls or garages in the immediate vicinity of equipment radiating heator near heaters.

▷

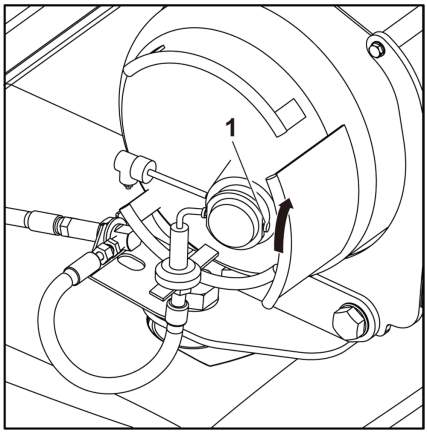

Lifting system and attachments

Operating the lifting device

⚠ DANGER

When the lifting device or any attachments are moving, there is a danger the driver will be caught between the lifting device and the forklift truck.

Therefore, the driver must not be located at or enter in between the lifting device and the forklift truck. The lifting device and attachments may only be used for their specified uses. The driver must receive training related to the operation of the lifting system and attachments. Keep in mind the maximum lift height.

– Take note of the switching symbols with arrows. ▷

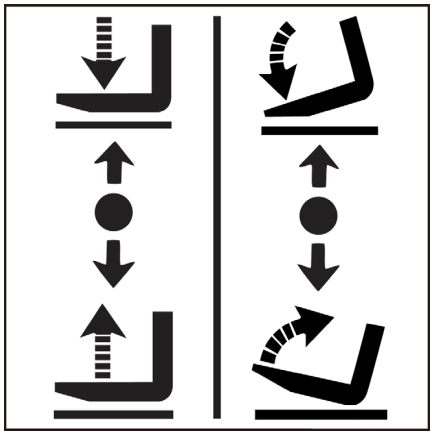

Operation of the control lever must be slow and steady. Lifting, lowering and tilting speeds depend on the range of motion of the control level.The control lever will automatically return to neutral when released.

Lifting the fork carriage ▷

⚠ DANGER

If any danger occurs when raising the lift mast, immediately stop raising the fork arms.

– Push the control lever (1) back.

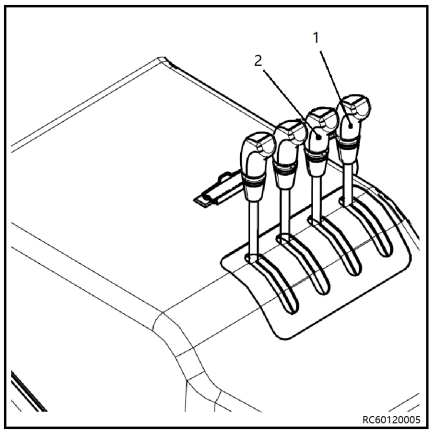

Lower the fork carriage

– Push the control lever (1) forward.

Tilting the lift mast forward

– Push the control lever (2) forward.

Tilting the lift mast backward

– Push the control lever (2) back.

When transporting a load, tilt the lift mast backwards for better stability.

Operating attachments

Attachments are optional pieces of equipment installed on the forklift truck: (such as sideshift forks, rotators, clips, etc.). Please do not exceed the working pressure of attachments during operation, and ensure that operation is in compliance with datasheets. One or two additional control levers can be installed to operate attachments.

NOTE

Below is a description of attachment operations. The forklift truck can be configured with different operating levers.

– Take note of the switching symbols with arrows ▷

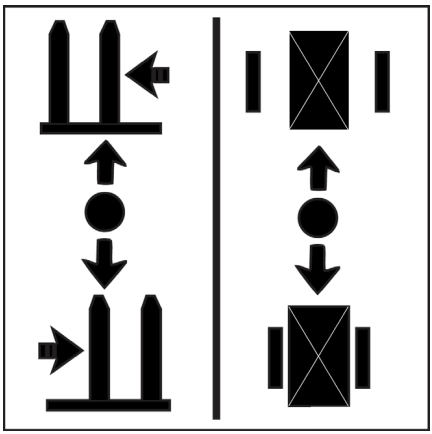

Sideways movement

▷

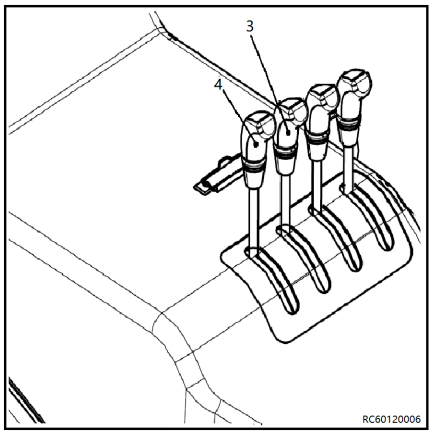

NOTE

In order to prevent damage, do not operate in a sideways direction when the fork arms are on the ground.

– Push the control lever (3) forwards and move to the left.

– Push the control lever (3) backwards and move to the right.

Operating fixtures

– Push the control lever (4) forwards to open the jig.

– Push the control lever (4) backwards to clamp the jig.

Handling loads

Safety regulations when handing loads ▷

The safety regulations for handling loads are shown in the following sections.

⚠ DANGER

There is a risk to life caused by falling loads or if parts of the truck are being lowered.

- Never walk or stand underneath suspended loads or raised fork arms.
- Never exceed the maximum load indicated on the capacity rating plate. Otherwise stability cannot be guaranteed!

⚠ DANGER

Risk of accident from falling or crushing!

- Do not step onto the forks.
- Do not lift people.
- Never grab or climb on moving parts of the truck.

⚠ DANGER

Risk of accident from a falling load!

- When transporting small items, attach a load safety guard (variant) to prevent the load from falling on the driver.
- Use a closed roof covering (variant) in addition.

Load centre distance and load capacity

Before lifting goods, the relationship between the weight, load centre of gravity distance and maximum lift height of the goods must be understood.

Load centre distance refers to the distance between the vertical plane of the fork arms and the centre of gravity of the loads(1).

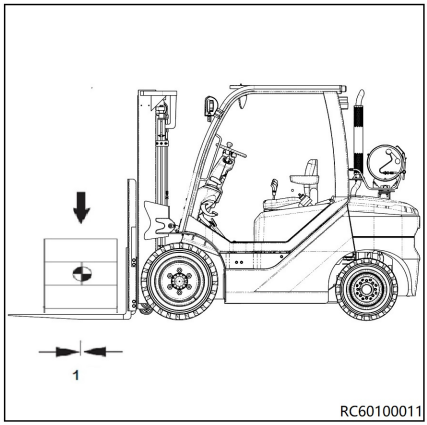

NOTE

The centre of gravity of a load is not necessarily located at the central point of the load itself. The load capacity refers to the weight of goods able to be lifted to a specified height within a given load centre distance.

Capacity Chart

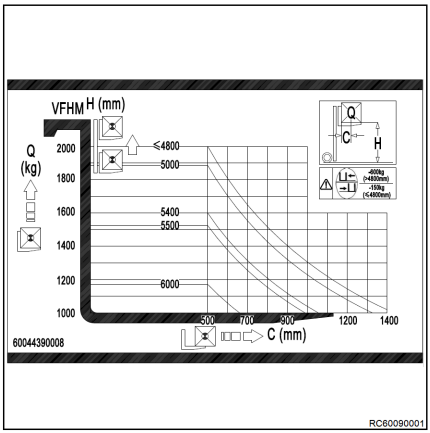

DANGER

The parameters in the load diagram and on the labels apply to compact, uniform loads. These load limits must not be exceeded. Exceeding the load limits will affect the stability of the forklift truck and the strength of the lift mast.

Refer to the CAPACITY CHART before lifting goods. If attachments are fitted, refer to the load rating label for the attachment.

Truck model: RCG20 with single tyre

Load centre: 500 mm

Lift height: ≤4800mm

In this case, the maximum load capacity is: 2000 kg

- Before loading, make sure that the dimensions and weight of the load are within the approved standard specified in the “Technical Datasheet” chapter and on the load rating plate.
- Before operating an attachment, read the load capacity data plate on the attachment.

Before lifting a load

Before lifting a load, check the load capacity chart on the engine cover.

The maximum capacity is determined by the lifting height and the load centre distance.

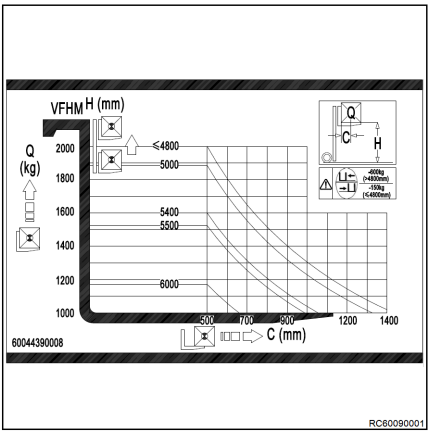

NOTE

Check the load capacity limits and contact your authorised dealer before transporting:

- off-centre or swinging loads
- loads with the mast tilted forwards or the load not near the ground
- loads beyond the centre of gravity
- before operating attachments
- loads at wind force 6 and higher

Transporting pallets

As a rule, loads (e.g. pallets) must be transported individually. Transporting multiple loads at the same time is only permitted:

- when instructed by the supervisor and
- when the technical requirements have been met.

The driver must ensure proper condition of the load. Only safely and carefully positioned loads may be transported.

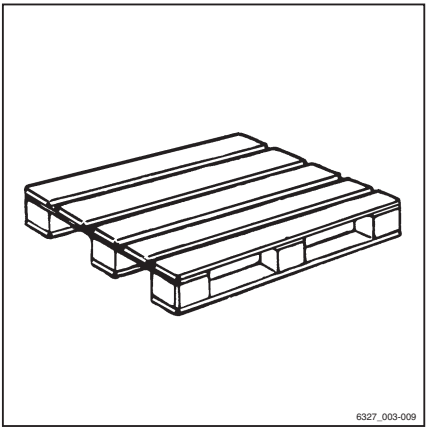

Danger area

The danger area is the area in which people are at risk due to the movements of the truck, its working equipment, its load-carrying equipment (e.g. attachments) or the load. Also included are the areas where loads could fall or working equipment could fall or be lowered.

⚠ DANGER

Risk of injury!

– Do not step on the fork.

⚠ DANGER

Risk of injury!

– Do not step under the raised forks.

⚠ DANGER

People may be injured in the danger area of the truck!

The danger area of the truck must be completely clear of all personnel, except the driver in his normal operating position. If persons fail to leave the danger area despite warnings:

– Cease work with the truck immediately.

– Secure the truck against use by unauthorised parties.

⚠ DANGER

Danger of death from falling loads!

– Never walk or stand underneath suspended loads.

Transporting suspended loads

Before transporting suspended loads, consult the national regulatory authorities (in Germany, the employer's liability insurance associations).

National regulations may place restrictions on these operations, e.g. in Italy. Contact the relevant authorities.

If there are no country-specific regulations for suspended loads in the country of use, the following instructions for safe handling must be observed.

⚠ DANGER

Suspended loads that begin to swing can result in the following risks:

- Impaired braking and steering movement
- Tipping over the load wheels or drive wheels

- Tipping the truck at right angles to the drive direction
- Risk of crushing of guide persons
- Reduced visibility

⚠ DANGER

Loss of stability!

Slipping or swinging suspended loads can lead to a loss of stability and cause the truck to tip over.

– When transporting suspended loads, observe the following instructions.

Instructions for transporting suspended loads:

- Swinging loads must be prevented by using the proper driving speed and driving style (careful steering, braking).
- Hanging loads must be hooked on to the truck in such a way that the harness cannot shift or release unintentionally and cannot be damaged.
- When transporting suspended loads, suitable aids (e.g. guy wires or supporting poles) must be available so that accompanying persons can guide suspended loads and prevent the loads from swinging.
- Take particular care to ensure that there is no one in the drive direction in the driving lane.
- If, despite this, the load begins to swing, ensure that no person is placed at risk.

⚠ DANGER

Risk of accident!

When transporting suspended loads, never perform or end driving and load movements abruptly.

Never drive on slopes with a suspended load.

Transporting containers holding fluids as hanging loads is not permitted.

Adjusting the fork arm distance

– Raise the knob (2) and rotate it by 90°. ▷

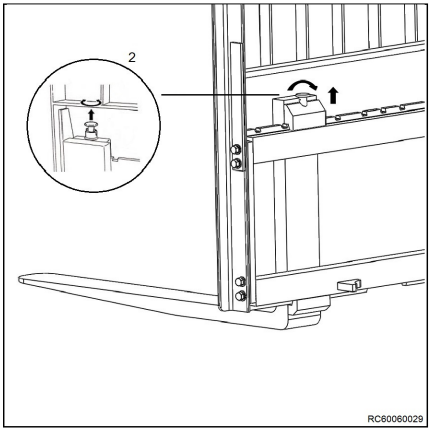

– Adjust the fork arms (1) according to the dimensions of the load to be lifted. ▷
– Ensure that an equal distance is maintained from both fork arms to the centre line of the fork carriage.
– Ensure that the fork arms are locked in one of the grooves on the fork carriage using the knob (2).

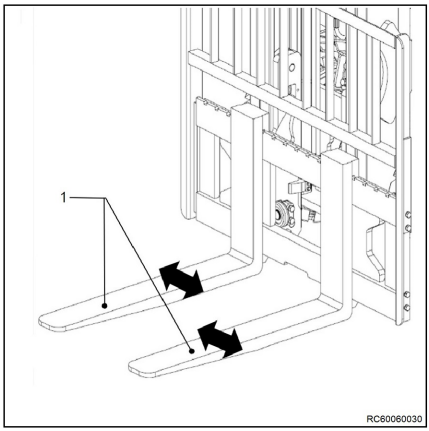

⚠ CAUTION

For greater load stability, the distance between the two fork arms must be as large as possible while remaining consistent with the lifting points of the load, so that the load centre of gravity is between the fork arms.

⚠ CAUTION

For greater load stability, the position of the fork arms must be as symmetrical as possible with respect to the centre of the fork carriage.

Picking up a load

⚠ DANGER

The truck may tip over if the load is too heavy.

Before picking up the load, check that the dimensions and weight of the load lie within the permitted range for the truck. This information can be found on the capacity rating plate.

⚠ DANGER

There is a risk to life caused by a falling load or if parts of the truck are being lowered.

- Never walk or stand underneath suspended loads or raised fork arms.
- Never exceed the maximum load values specified on the capacity rating plate. Otherwise, stability cannot be guaranteed.

- Only store pallets that do not exceed the specified maximum size. Damaged loading equipment and incorrectly formed loads must not be stored.
- Attach or secure the load to the lifting accessory so that the load cannot move or fall.
- Store the load so that the specified aisle width is not reduced by protruding parts.
- Drive carefully towards the racking. ▷

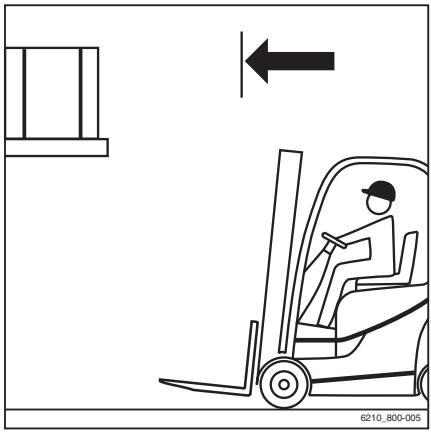

– Position the forks.
– Set the lift mast to vertical.
– Lift the fork carriage to the stacking height.

DANGER

Risk of accident due to changed moment of tilt!

If a truck is operated with a forwards tilt (variant) of more than 3°, there is a greater risk of the load slipping when the load is raised or lowered. The load centre of gravity and the moment of tilt change when the load slips. The truck may tip forwards.

– Only tilt the lift mast forwards with a raised lifting accessory when it is directly above the stack.
– When the lift mast is tilted forward, take particular care to ensure that the truck does not tip forwards and that the load does not slip.

CAUTION

Component damage possible!

When inserting the fork into the racking, ensure that the racking and load are not damaged.

– Insert the fork as far under the load as possible using the brake Inching pedal. Stop the truck using the service brake as soon as the fork back is resting against the load. The load centre of gravity must be midway between the fork arms.

– Lift the fork carriage until the load is resting entirely on the fork. ▷

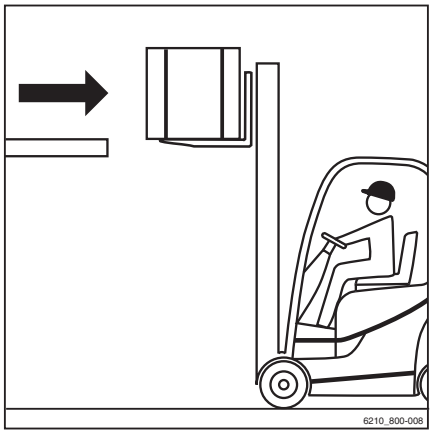

NOTE

The lifting speed can be increased by adjusting the engine speed. Refer to the chapter entitled "Increasing the lifting speed".

DANGER

Risk of accident!

– Beware of any people in the danger area.

CAUTION

Component damage possible!

– Ensure that the roadway behind you is clear.

– Move backwards carefully and slowly until the load is clear of the racking. Brake gently.

DANGER

Never tilt the lift mast with a raised load due to the risk of tipping!

– Lower the load before tilting the lift mast.

– Lower the load while maintaining ground clearance. ▷

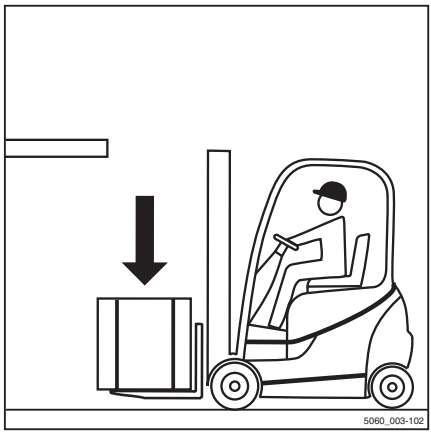

– Tilt the lift mast backwards. The load can now be transported. ▷

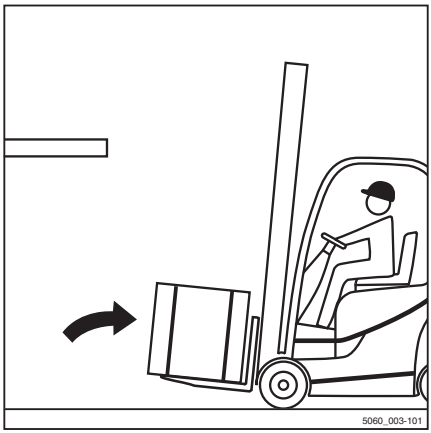

Increasing the lifting speed

– Fully depress the brake Inching pedal (1) and hold it down. The drive wheels are now uncoupled from the engine. ▷
– Pull the "lift" operating lever as far back as possible. The truck begins to lift.
– Depress the accelerator pedal (2) to increase the engine speed. This action increases the lifting speed. In this way, the lifting speed can be controlled using the accelerator pedal.

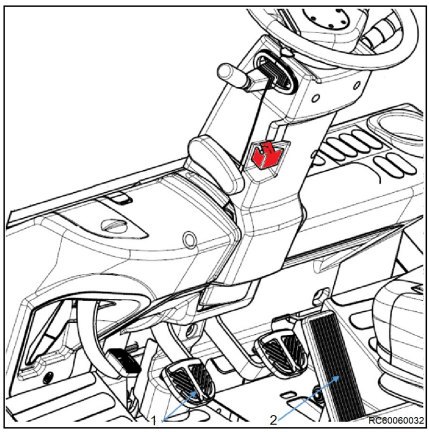

Transporting loads

NOTE

Observe the information in the chapter entitled "Safety regulations when driving".

DANGER

The higher a load is lifted, the less stable it becomes. The truck can tip over or the load can fall, increasing the risk of accident!

Driving with a raised load and the lift mast tilted forward is not permitted.

- Only drive with the load lowered.
- Lower the load until ground clearance is reached (not over 300 mm).
- Only drive with the lift mast tilted backwards.

- Drive slowly and carefully round corners!

NOTE

Observe the information in the chapter entitled "Steering".

- Always accelerate and brake gently!

NOTE

Observe the information in the chapter entitled "Operating the service brake".

– Never drive with a load protruding to the side (e.g. with the sideshift)!

▷

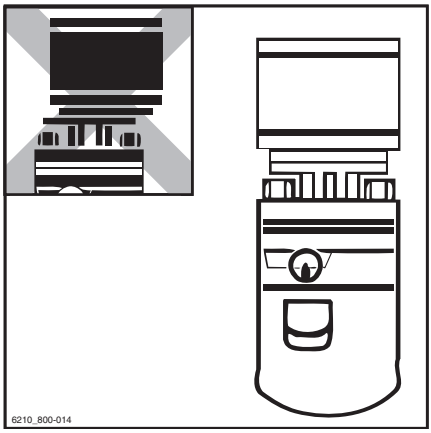

Determining visibility conditions when driving with a load

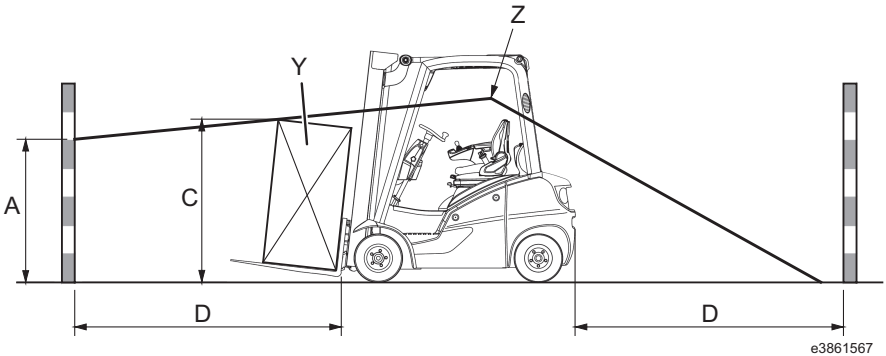

A	Area that is not visible (max. 1085 mm)	Y	Load (varies depending on operator)
C	Load height (in driving position)	Z	Driver's eye level
D	4000 mm (distance to the front from the rear corner of the load when it is positioned on the fork carriage in the driving position)		

The driver's field of vision can be severely limited when driving with a larger load or with attachments fitted. In this case, safe operation is no longer guaranteed.

Visibility conditions can be evaluated by determining the size of the area that is not visible (A).

Procedure:

- The driver moves into position in his seat.
- The area that is not visible (A) is determined based on the load (Y) and the length of the route (D).
- If the area that is not visible exceeds 1085 mm (EN16842-2/A3), the visibility conditions are inadequate.

In the case of inadequate visibility conditions, the following measures are possible:

- Reverse travel (see illustration)
- Splitting the loads
- Optimising the transport routes
- Using support staff, e.g. as a guide

The operating company must complete a risk analysis in order to evaluate visibility obstructions that may be encountered during operation.

The risks of poor visibility due to the load must be weighed against the risk of health-related consequences due to the upper body being twisted during reverse travel.

A rotary seat can be used to assist the driver when reversing.

Contact your service partner.

NOTE

Any applicable national regulations must be observed.

Driving on ascending and descending gradients

⚠ DANGER

Danger to life!

Driving on ascending and descending gradients carries special dangers!

– Always follow the instructions below.

– On ascending and descending gradients, the load must be carried facing uphill.
– It is only permitted to drive on ascending and descending gradients that are marked as traffic routes and that can be used safely.
– Ensure that the ground to be traversed is clean and provides a good grip.
– Do not turn on ascending and descending gradients.
– Do not drive onto or along ascending and descending gradients at an angle.
– Do not park the truck on ascending or descending gradients.
– In case of emergency, secure the truck with wedges so that the truck does not roll away.
– Reduce the driving speed on descending gradients.

It is not permitted to drive on long ascending and descending gradients greater than 15% due to the specified minimum braking and stability values.

– Before driving on ascending and descending gradients greater than 15%, consult the authorised service centre.

The process of placing loads into stock and removing loads from stock while on an ascending or descending gradient is not permitted!

– Always place loads into stock and remove loads from stock on a horizontal plane.

Driving on lifts

The driver may only use this truck on lifts with a sufficient rated capacity and for which the operating company has been granted authorisation.

⚠ DANGER

There is a risk to life if you are crushed or run over by the truck.

- There must be no personnel already in the lift when the truck is driven into the lift.
- Personnel are only permitted to enter the lift once the truck is secure, and must exit the lift before the truck is driven out.

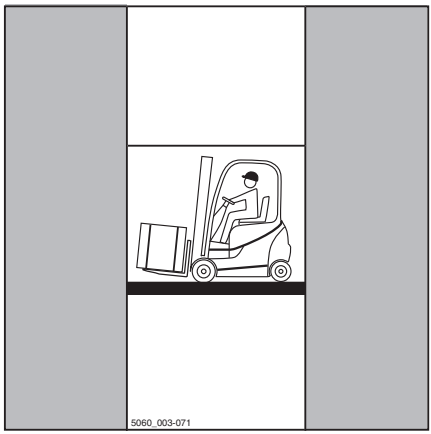

Determining the actual total weight

- Park the truck securely.
- Determine the unit weights by reading the truck nameplate and, if necessary, the attachment (variant) nameplate and, if necessary, by weighing the load to be lifted.
- Add the determined unit weights to obtain the actual total weight of the truck:

  Tare weight (1)

  \+ Ballast weight (variant) (2)

  \+ Attachment net weight (variant)

  \+ Weight of the load to be lifted

  \+ 100 kg allowance for driver

  = Actual total weight

- Drive the truck with the forks forwards into the lift without touching the shaft walls.
- Park the truck securely in the lift to prevent uncontrolled movements of the load or the truck.

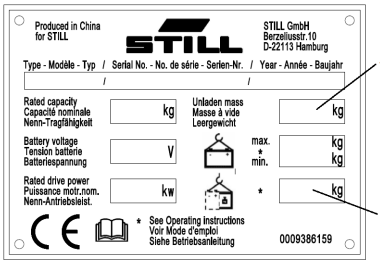

RC60060036

Transport of swinging loads ▷

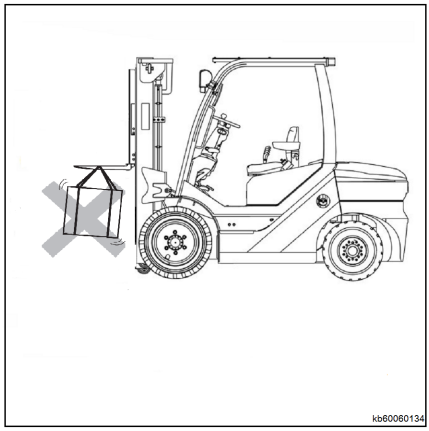

Before transporting suspended loads, consult the national regulatory authorities.

National regulations may place restrictions on these operations. Contact the relevant authorities.

⚠ DANGER

Suspended loads that begin to swing can result in the following risks:

- Impaired braking and steering action
- Tipping over the load wheels or drive wheels
- Tipping the truck at right angles to the direction of travel
- Risk of crushing of guide persons
- Reduced visibility.

⚠ DANGER

Loss of stability.

Slipping or swinging suspended loads can lead to a loss of stability and cause the truck to tip over.

– When transporting suspended loads, observe the following instructions

Instructions for transporting suspended loads:

- Swinging loads must be prevented by using the proper driving speed and driving style (careful steering, braking)
- Hanging loads must be hooked on to the truck in such a way that the harness cannot shift or release unintentionally and cannot be damaged
- When transporting suspended loads, suitable devices (e.g. guy wires or supporting poles) must be available so that accompanying persons can guide suspended loads and prevent the loads from swinging
- Take particular care to ensure that there is no one in the drive direction in the driving lane
- If, despite this, the load begins to swing, ensure that no person is placed at risk

⚠ DANGER

Risk of accidents!

When transporting hanging loads, never perform or end driving and load movements abruptly.

Never drive on slopes with a suspended load.

Transporting containers holding fluids as hanging loads is not permitted.

Driving on loading bridges ▷

⚠ DANGER

Risk of accident if the truck crashes!

Steering movements can cause the tail end to veer off the loading bridge towards the edge. This may cause the truck to crash.

The lorry driver and the truck driver must agree on the lorry's departure time.

- Before driving across a loading bridge, ensure that it is properly attached and secured and has a sufficient load capacity (lorry, bridge etc.).
- Drive slowly and with care on the loading bridge.
- Ensure that the vehicle onto which you will be driving is secured to prevent it from shifting and that it can support the load of the truck.

Determining the actual total weight ▷

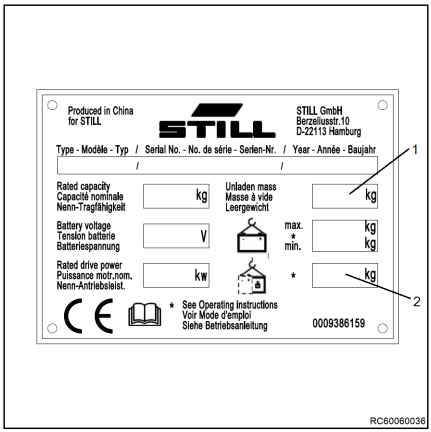

- Park the truck securely.
- Determine the unit weights by reading the truck nameplate and, if necessary, the attachment (variant) nameplate and, if necessary, by weighing the load to be lifted.
- Add the determined unit weights to obtain the actual total weight of the truck:

  Tare weight (1)

  \+ Ballast weight (variant) (2)

  \+ Attachment net weight (variant)

  \+ Weight of the load to be lifted

  \+ 100 kg allowance for driver

  = Actual total weight

Setting down loads

⚠ DANGER

Risk of accident due to changed moment of tilt!

Please note that the lift mast can be tilted far enough forwards with a raised load to cause the truck to tip over. The load centre of gravity and the moment of tilt both change when the load slips. The truck may tip forwards.

– Only tilt the lift mast forwards with a raised lifting accessory when it is directly above the stack.
– When the lift mast is tilted forwards, take particular care to ensure that the truck does not tip forwards and that the load does not slip.

NOTE

If the truck is to be used to place a raised load in storage with the lift mast tilted forwards, e.g. in a rack with sloping racking channels, an additional load capacity diagram must be created because the stability will be affected. Please contact the authorised service centre.

⚠ WARNING

Risk of accident from a falling load!

If the fork or the load remains suspended during lowering, the load may fall.

– When removing a load from storage, move the truck far enough back so that the load and the fork can be lowered freely.

– Drive up to the stack with the load lowered in accordance with regulations. ▷
– Set the lift mast to vertical.
– Lift the load to the stacking height.
– Drive the truck carefully into the stack. Use the brake Inching pedal at the same time

- Lower the load until it rests securely on the racking.
- Look behind!
- Move the truck back until the fork arms can be lowered without touching the stack.
- Lower the fork to the ground clearance position.
- Tilt the lift mast backwards and drive away.

Towed load

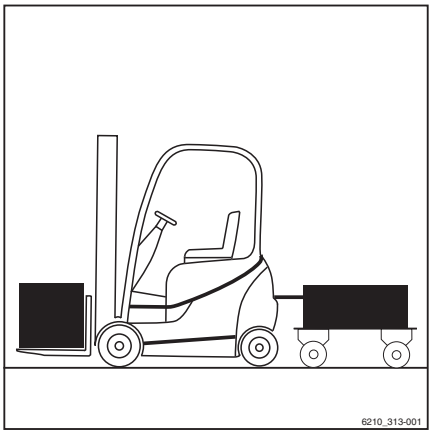

DANGER

There is an increased risk of accident when using a trailer.

Using a trailer changes the truck handling characteristics. When towing, operate the truck such that the trailer train can be safely driven and braked at all times. The maximum permissible speed when towing is 5 km/h.

- Do not exceed the permissible speed of 5 km/h.
- Do not couple the truck in front of rail vehicles.
- The truck must not be used to push any kind of trolley.
- It must be possible to drive and brake at all times.

CAUTION

Risk of damage to components!

The maximum towed load for occasional towing is the rated capacity specified on the nameplate. Overloading can lead to component damage on the truck. The sum of the actual towed load and the actual load on the fork must not exceed the rated capacity. If the existing towed load corresponds to the rated capacity of the truck, no load may be transported on the fork at the same time. The load can be distributed between the fork and the trailer.

- Check the load distribution and adjust it to correspond to the rated capacity.
- Observe the permissible rigidity value of the tow coupling.

CAUTION

Risk of damage to components!

The maximum towed load only applies when towing unbraked trailers on a level surface (maximum deviation +/- 1%) and on firm ground. The towed load must be reduced if towing on gradients. If necessary, notify the authorised service centre of the application conditions. The service centre will provide the required data.

- Inform the authorised service centre.

CAUTION

Risk of damage to components!

A support load is not permitted.

- Do not use trailers with tillers supported by the tow coupling.

This truck is suitable for the occasional towing of trailers. If the truck is equipped with a towing device, this occasional towing must not exceed 2% of the daily operating time. If the truck is to be used for towing on a more regular basis, the manufacturer should be consulted.

Forklift towing

The forklift can be towed, in case of breakdown, using the tow coupling (1) Before towing models with reversing lever on the steering wheel, check that this lever (2) is in the central position.

⚠ CAUTION

During the towing operation, the operator must be on board the forklift in order to perform the steering and braking operations and the engine must be running.

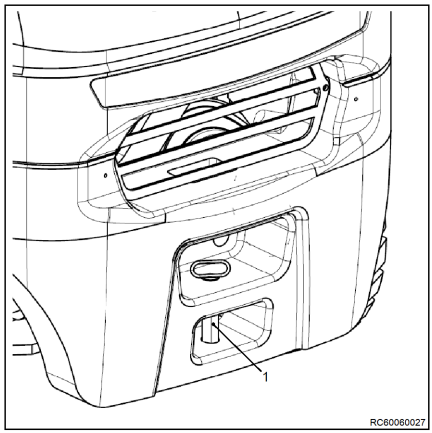

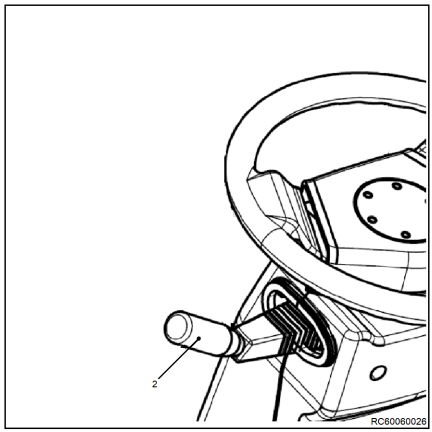

Leaving the truck temporarily

If you want to leave the truck temporarily to perform simple tasks in the vicinity of the truck (for example, order picking, opening the door or hitching a trailer) while keeping the ignition

switched on, you must observe the following precautions:

- Lower the fork carriage. Tilt the mast forward.
- Ensure the direction control lever and all the operating levers in the neutral position.
- Activate the parking brake.
- The parking symbol Ⓟ on the display unit comes on and remains lit. The truck is braked. ▷

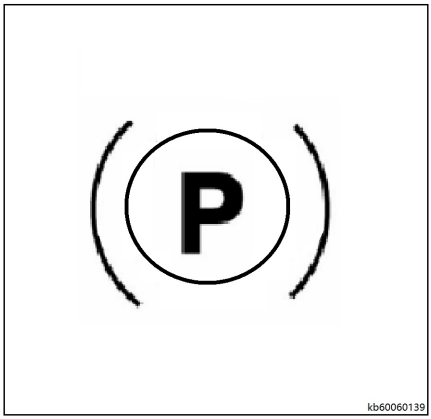

⚠ WARNING

Make sure that the truck does not move.

NOTE

When leaving the truck temporarily, be sure to keep the truck under constant supervision.

Leaving the truck

- Before leaving the truck, lower the fork arms to the ground, tilt the mast forwards.
- Ensure the direction control lever and all the operating levers in the neutral position.

– Secure the truck by applying the parking brake(1). ▷

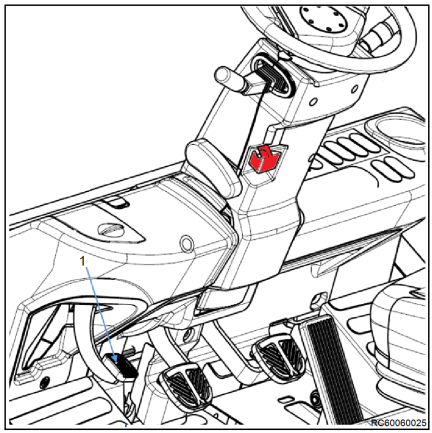

– Switch off the truck by turning the ignition and stop key to position "0" and then pull out the ignition and stop key. ▷

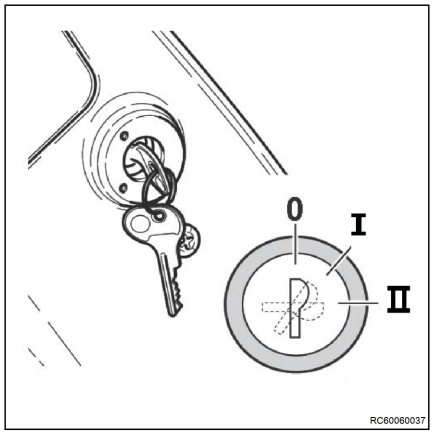

⚠ DANGER

Never switch the forklift truck off by turning the ignition and stop key while the forklift truck is still moving.

⚠ DANGER

NEVER leave the forklift truck without having first applied the parking brake(1) and removed the key. NEVER park the truck on a gradient or slope. The truck may only be parked on a slope in emergency situations. In this case, suitable wheel chocks must be positioned under the front wheels.

NOTE

The truck has a warning sound that is activated when the truck is parked but the parking brake has not been applied. The signal will sound even if the truck has been switched off and the key removed.

Truck storage

Truck Storage

Before storage

Before storing your forklift truck, clean it thoroughly and perform inspection as the following procedures.

- Wipe away grease, oil, etc. covering the body of the truck with waste cloth, if needed
- While washing the body of the truck, check general condition of the truck. Especially check the truck's body for recess or damage and tires for wear and nails or stones in the tread.
- Fill the oil tank with the appointed fuel.
- Check for leakage of hydraulic oil, engine oil, fuel or coolant.
- Apply grease to where needed.
- Check for looseness of hub nuts and cylinder piston rod joints. Check the surface of piston rod for damage.
- Check mast rollers to see that they rotate smoothly.
- Fill up enough oil into the lift cylinders by lifting the lift cylinders fully.
- In winter or cold season, don't drain long-acting antifreeze, while cooling water shall be drained.

Daily storage

- Park the forklift truck at a specified place and block the wheels.
- Place the direction lever in the neutral position and apply the parking brake by depressing the parking brake pedal.
- Turn the ignition key to "OFF" position and turn off the engine, operate joystick of control valve several times to release residual pressure in the hydraulic system.
- Remove the key and keep it in a safe place.

Long-term storage

If use of the truck will be suspended for more than 2 months, it should be parked in a well-ventilated, frost-free, clean and dry place, and the following measures should be taken.

Perform the following service and checks in addition to the "Daily storage" service:

- Clean the truck thoroughly.
- Park the truck in a well-ventilated, frost-free, clean and dry place.
- Both raise and lower the fork carriage and tilt the lift mast forwards and backwards several times. If equipped with attachments, operate the attachments several times.
- Lower the fork onto a support mounting so that the lift chain does not continue to experience stress.
- Apply a light layer of oil or grease to exposed unpainted parts such as piston rods and mast rollers.
- Lubricate the truck per the scheduled maintenance procedure.
- The truck should be operated at least once a week. Check coolant level and replenish if necessary. Start the engine and warm up thoroughly. Move the truck slowly forwards and backwards. Operate the hydraulic controls several times.

⚠ CAUTION

Jack up the forklift truck so that the wheels leave the ground to avoid tyre deformation.

NOTE

Do not use plastic sheeting to cover the forklift truck because this will exacerbate condensation and aggregation.

NOTE

If the forklift truck will be out of use for a period of over 12 months, check the quality of all oils and fluids and replace when necessary. Please consult your authorised dealer for relevant information.

Start-up after storage

- Clean the truck thoroughly.
- Change the engine oil, transmission oil, and gear lubricant.
- Discharge foreign matter and water from the hydraulic reservoir and fuel tank.
- Remove the cylinder cap, the valves and the rocker shafts, check for the clearance in normal data.
- Add cooling fluid to specified level.
- Perform pre-operation checks carefully.
- Check coolant level and replenish if necessary. Start the engine and warm up thoroughly before operation.

WARNING

At any time your lift truck is found to be in need of repair, defective, or in any way unsafe, the condition should be reported to be supervisor immediately, and the truck should be taken out of service until it has been restored to safe operating condition.

Disposal of old trucks

The disposal of old trucks is regulated in directive 2000/53/EC from the European Parliament and Council.

We therefore recommend having this work carried out in an approved recycling plant. If you would like to carry out this work yourself, you must obtain approval from the relevant authorities as per articles 9, 10 and 11 of directive 75/442/EEC.

In addition, the following minimum requirements must be observed:

- The locations in which old trucks are stored before treatment must be areas suited to this task with impervious surfaces. These areas are also to be equipped with collection devices and separators for leaking fluids and degreasing cleaning materials
- The locations for treatment must be areas suited to this task with impervious surfaces. These areas must also be equipped with collection devices and separators for leaking fluids and degreasing cleaning materials. Suitable storage areas must be available for disassembled and partially oil-smeared parts, as well as for tyres including fire protection measures. Suitable storage tanks for fluids such as fuel, AdBlue® (urea solution), engine oil, hydraulic oil, cooling fluid and fluids from air conditioning systems must also be provided
- In order to dispose of harmful substances from the old trucks, the batteries and LPG container must be removed. The following must also be removed, collected and stored separately: fuel, AdBlue® (urea solution), engine oil, cooling fluid, hydraulic oil and fluids from air conditioning systems
- The following parts are to be collected separately and recycled: catalytic converters, metal components containing copper and aluminium, tyres, large plastic components (consoles, fluid containers) and glass

NOTE

The operating company is responsible for adherence to the directives as well as additional country-specific regulations.

Cleaning

Cleaning the truck

– Park the truck securely.

– Switch the electrical system off before cleaning.

⚠ WARNING

There is a risk of injury due to falling when climbing onto the truck!

When climbing onto the truck, you can get stuck or slip on components and fall. Higher points on the truck should only be accessed using the appropriate equipment.

– Strictly adhere to the following steps.

– Use only the steps provided to climb onto the truck.

– Use equipment such as stepladders or platforms to reach inaccessible areas.

Washing the truck exterior

⚠ CAUTION

There is a risk of short circuit if water penetrates the electrical system!

– Strictly adhere to the following steps.

– Prior to cleaning, switch off the power supply to the electrical system.

– Do not spray electrical components and the covers on these components directly with water.

⚠ WARNING

Failure to follow these instructions could result in damaged components!

The engine must be switched off during washing. Water should not be used to clean the area around the central electrical system; instead, only clean with a dry cloth or clean compressed air.

⚠ WARNING

Excessive water pressure or water and steam that are too hot can damage truck components.

– Strictly adhere to the following steps.

– Only use high-pressure cleaners with a maximum output power of 50 bar and at a maximum temperature of 85°C.

– When using high-pressure cleaners, make sure there is a distance of at least 20 cm between the nozzle and the object being cleaned.

– Do not aim the cleaning jet directly at adhesive labels or information signs.

⚠ DANGER

Risk of fire! Deposits/accumulations of combustible materials may ignite in the vicinity of hot components (e.g. exhaust pipes).

– Strictly adhere to the following steps.

– Regularly remove all deposits/accumulations of foreign materials in the vicinity of hot components.

– Do not place combustible materials in the engine compartment.

⚠ DANGER

Risk of fire! Flammable fluids can be ignited by hot components on the truck.

– Strictly adhere to the following steps.

– Do not use flammable fluids for cleaning.

– Observe the manufacturer's guidelines for working with cleaning materials

⚠ CAUTION

Abrasive cleaning materials can damage component surfaces!

Using abrasive cleaning materials that are unsuitable for plastics may dissolve plastic parts or make them brittle. The screen on the display operating unit may become cloudy.

– The procedures outlined below must be followed in all cases.

- Clean plastic parts only with cleaning materials intended for plastic parts.
- Observe the manufacturer's guidelines for working with cleaning materials

⚠ CAUTION

Excessive water pressure or water and steam that are too hot can damage truck components.

- The procedures outlined below must be followed in all cases.

- Clean the truck exterior with water-soluble cleaning materials and water (water jet, sponge, cloth).
- Clean all walk-in areas, the oil filling openings and their surroundings, and the lubricating nipples before lubricating.

NOTE

Please note: The more often the truck is cleaned, the more frequently it must be lubricated.

Cleaning the electrical system ▷

⚠ CAUTION

Cleaning electrical system parts with water can damage the electrical system.

- Cleaning electrical system parts with water is forbidden!
- Use dry cleaning materials in accordance with the manufacturer's specifications.
- Do not remove covers etc.

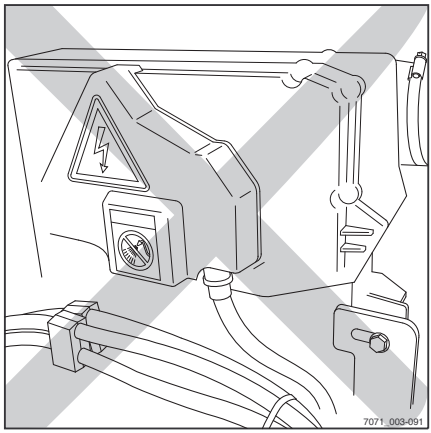

⚠ CAUTION

Possible component damage due to compressed air.

- If components are cleaned with compressed air, the air must have a maximum pressure of 0.15 bar.

This prevents liquids or small solids from being forced through slots or openings inside components and causing damage.

– Clean the electrical system parts with a metal-free brush and blow the dust off with low-pressure compressed air.

Lubricate the lift mast and chains with chain spray

▷

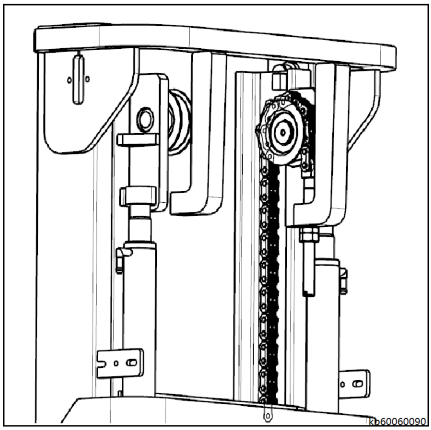

NOTE

If there is excessive dust on the chain affecting the ability of the lubricant to permeate the chain, the lifting chain must be cleaned.

– Place an oil collecting trough under the lift mast

– Carry out cleaning with an alkyl derivative such as an industrial diesel fuel cleaning agent (please comply with the manufacturer's safety instructions).

– Additives may not be used if using a steam nozzle.

– Immediately blow the chain dry after cleaning to remove water both on the chain surface and inside the hinge pins. Move the chain several times during the blow-drying process.

– Immediately apply chain spray and keep the chain moving while doing so.

NOTE

The lifting chains are a safety component. The use of cold cleaning agents, chemical cleaning agents, corrosive liquids or liquids containing acid or chlorine will cause direct damage to the chains.

⚠ CAUTION

For safety reasons, wear safety equipment while working at height.

After washing

▷

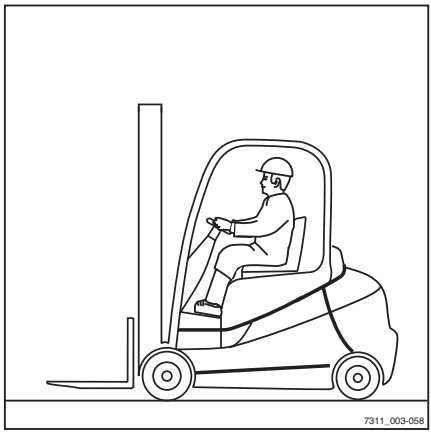

- Carefully dry the truck (e.g. with compressed air).
- Sit in the driver's seat and start up the truck in accordance with the regulations.

⚠ CAUTION

Risk of short circuits!

- If any moisture has penetrated into the electrical system despite the precautionary measures taken, the system must first be dried using compressed air.

Decommissioning

General information

This chapter contains information about "**temporary decommissioning**" and "**permanent decommissioning**".

Measures to be implemented when decommissioning

The following tasks must be carried out if the truck is not used for an extended period:

- Clean the truck as described in the chapter entitled "**Cleaning the forklift truck**" and park the truck in a dust-free, dry, frost-free and well-ventilated area.
- Lift the fork carriage to the stop several times.
- Tilt the lift mast forwards and backwards several times and, if fitted, move attachment repeatedly.
- Lower the fork carriage. To relieve the strain on the load chains, lower the fork carriage onto a suitable supporting surface, e.g. a pallet.
- Check hydraulic oil level and top up if required.
- Apply a thin layer of oil or lubricating grease to all unpainted parts as corrosion protection.
- Lubricate all lubrication points listed in the chapter entitled "**Summary table of maintenance operations**".
- Spray all exposed electrical contacts on the battery with a suitable contact spray.
- Remove the battery and store it in a dry and frost-free room.
- Regularly check the charge state of the battery and recharge if necessary.
- Jack up the truck so that the tyres are not touching the ground. This will prevent permanent deformation of the tyres.
- Fill the fuel tank.

- Preserve the engine as specified by the engine manufacturer.
- Cover the truck with a cover that is **NOT** made of plastic.
- If the truck is to be decommissioned for longer periods, contact the authorised service centre to find out about additional measures.

Recommissioning after storage

If the truck has been in storage for longer than six months, it must be carefully checked before being recommissioned. As in the annual inspection, this check should also include all safety items for the truck.

- Clean the truck thoroughly; see the chapter entitled "Cleaning".
- Oil joints and controls.
- Check battery condition and acid density; recharge if necessary.
- Restore engine to normal condition according to regulations of engine manufacturer.
- Check engine oil for condensed water and change if necessary
- Check hydraulic oil for condensation water; change if necessary.
- Carry out the checks and tasks that are to be performed before daily use.
- Put the truck into operation.

During commissioning, the following must be checked in particular:

- Drive, control, steering
- Brakes (service brake, parking brake)
- Lifting system (load-carrying equipment, load chains, mounting)

NOTE

For further information, see the truck workshop manual or contact the authorised service centre.

Permanent decommissioning (scrapping)

The forklift truck must be scrapped in compliance with local regulations. In the event of queries regarding the scrapping of forklift trucks in accordance with regulations, contact the authorised sales network or the recycling companies authorised for scrapping.

ENVIRONMENT NOTE

In particular, batteries, fluids (oils, fuels, lubricants etc.), electrical and electronic components and rubber components must be disposed of in compliance with specific local regulations for each type of material.

5

Maintenance

General information

To keep the forklift truck in a good operating condition, the repair work specified on the following pages must be carried out regularly, at the indicated intervals, and using the consumable material designed for the purpose. A written record must be kept of all work that has been carried out. This is the only way of guaranteeing validity of the warranty.

⚠ CAUTION

Any upcoming maintenance and repair work must be carried out by authorised service engineers in order to guarantee that the truck remains in a good, safe operating condition and that it fulfils all technical specifications.

⚠ CAUTION

The intervals for the various maintenance tasks to be carried out on a regular basis must be shortened accordingly if the truck is used in particularly severe conditions, such as:

- In dusty environments
- At temperatures below zero
- For particularly heavy-duty work

To determine the amended maintenance intervals, please contact your authorised service centre.

NOTE

Please contact your authorised service centre for a maintenance contract that is appropriate for your forklift truck.

Personnel qualifications

Only qualified and authorised personnel are allowed to perform maintenance work. Regular safety checks and checks after unusual incidents must be performed by a competent person. The competent person must conduct their evaluation and assessment from a safety standpoint, unaffected by operational and economic conditions. The competent person must have sufficient knowledge and experience to be able to assess the condition of a truck and the effectiveness of the protective devices in accordance with technical conventions and the principles for testing trucks.

Maintenance work without special qualifications

Simple maintenance work, such as checking the hydraulic oil level, may be carried out by untrained personnel. A qualification such as those held by a competent person is not required to carry out this work. The required tasks are described in the chapter entitled "Remaining ready for operation".

Preliminary maintenance operations

Carry out the following steps before performing maintenance operations:

- Park the truck in an area where it does not obstruct other trucks.
- Park the truck on a flat surface and secure it with wheel chocks behind the wheels to prevent it from rolling away unintentionally.
- Seal off the area where you are performing the maintenance.
- Lower the fork arms to the ground.
- Apply the parking brake.
- Turn off the forklift truck, and remove the ignition and stop key.

Preliminary maintenance operations

⚠ DANGER

Risk of severe electric shock.

Disconnect the negative connecting terminal from the battery before performing any work on the electrical system.

Scheduled truck maintenance

Maintenance — 500 hours

At operating hours										Carried out	
500		1500		2500		3500		4500			
5500		6500		7500		8500		9500		✓	✗
Chassis, bodywork and fittings											
Check the chassis for cracks											
Check the overhead guard/cab and panes of glass for damage											
Check the controls, switches and joints for damage, and apply grease and oil											
Check the driver's seat for correct function and for damage											
Check that the seat belt is in good condition and functions correctly											
Tyres and wheels											
Check that the wheels are securely attached and check the tightening torques of the wheel nuts											
Check the tyres for wear and check the air pressure if necessary											
Check the wheels for damage											
Internal combustion engine											
Change the engine oil and filter											
Check the cooling system for leaks and correct function											
Check the coolant and top up if necessary											
Replace the air filter insert											
Fuel system											
Change the fuel filter											
Check the fuel lines and clips											
LPG system											
Check the LPG system for damage, check that the screw joints are securely seated, and check for leaks using leak detection spray											
Steering and steering axle											
Lubricate the rear wheel bearings											
Lubricate the steering axle and check for leaks											
Brake											
Check the oil level of the brake system											
Hydraulics											
Check hydraulic system for condition, correct function and leaks											

At operating hours										Carried out	
500		1500		2500		3500		4500			
5500		6500		7500		8500		9500		✓	✖
Lift mast											
Check load chains for damage and wear, adjust and lubricate the load chains											
Check mast bearings for damage, and lubricate. Check the tightening torque											
Check mast profiles for damage and wear. Lubricate the mast profiles											

Maintenance — 1000 hours/annually

At operating hours										Carried out	
1000		2000		4000		5000		7000			
8000		10000		11000		13000		14000		✓	✗
Chassis, bodywork and fittings											
Check chassis for cracks											
Check overhead guard/cab and panes of glass for damage											
Check controls, switches and joints for damage, and apply grease and oil											
Check driver's seat for correct function and for damage											
Variant: Check the dual pedal for damage and correct function, and lubricate											
Check that the seat belt is in good condition and functions correctly											
Tyres and wheels											
Check that the wheels are securely attached and check the tightening torques of the wheel nuts											
Check tyres for wear and check the air pressure if necessary											
Check wheels for damage											
Torque converter											
Change the gearbox oil for the torque converter											
Replace the gearbox oil filter for converter gear											
Drive axle											
Change the axle oil											
Internal combustion engine											
Change the engine oil and filter											
Check the condition of the internal combustion engine (visual inspection)											
Check the exhaust system for leaks											
Adjust the valve clearance/rocker lever											
Check the cooling system for leaks and correct function											
Check the coolant and top up if necessary											
Replace the belt											
Replace the air filter insert											
Fuel system											
Change the fuel filter											
Check the fuel lines and clips											
LPG system											

At operating hours										Carried out	
1000		2000		4000		5000		7000			
8000		10000		11000		13000		14000		✓	✖
Check the LPG system for damage, check that the screw joints are securely seated, and check for leaks using leak detection spray											
Check the high-pressure relief valves (1.7 bar) and solenoid shut-off valve											
Change the LPG filter											
Overhaul the evaporator/pressure regulator, replace the sticker											
Check the CO content in the exhaust gas											
Check that the duration of engine run-on before the engine stops is acceptable											
Steering											
Steering axel lubricate											
Brake											
Check and adjust the service brake											
Check and adjust parking brake											
Check the oil level of the brake system											
Change the brake oil											
Electrical system											
Check the fuses											
Check lighting and indicator lights											
Check all power cable connections											
Hydraulics											
Check the condition of the hydraulic system, and check for correct function and leaks											
Replace the filter cartridge for the hydraulic oil											
Check that the hydraulics blocking function (Isolation valve) is working correctly											
Change the hydraulic oil (2000 hours for the first replacement and every 2000 hours thereafter)											
Lift mast											
Check the load chains for damage and wear. Adjust and lubricate the load chains											
Check the mast bearings for damage. Lubricate the mast bearings and check the tightening torque											
Check the mast profiles for damage and wear. Lubricate the mast profiles											
Check lift cylinders and connections for damage and leaks											
Check the guide pulleys for damage and wear											

At operating hours										Carried out	
1000		2000		4000		5000		7000			
8000		10000		11000		13000		14000		✓	✗
Check the support rollers and chain rollers for damage and wear barrier											
Check the tilt cylinders and connections for damage and leaks											
Check the fork carriage for damage and wear											
Check the fork arm interlock for damage and that is working correctly											
Check that there is a safety screw on the fork carriage or on the attachment											
Check the fork arms for wear											
Lubricate the rolling tracks and fork carriage runners											
Special equipment											
Heating system: Check the fresh air filter											
Heating system: Check for damage; observe the manufacturer's maintenance instructions											
Check the attachments for wear and damage; observe the manufacturer's maintenance instructions											
Check the trailer coupling for wear and damage; observe the manufacturer's maintenance instructions											

Maintenance - 3000 hours

At operating hours										Carried out	
3000		6000		9000		12000		15000		✓	✗
Chassis, bodywork and fittings											
Check chassis for cracks											
Check overhead guard/cab and panes of glass for damage											
Check controls, switches and joints for damage, and apply grease and oil											
Check driver's seat for correct function and for damage											
Variant: Check the dual pedal for damage and correct function, and lubricate											
Check that the seat belt is in good condition and functions correctly											
Tyres and wheels											
Check that the wheels are securely attached and check the tightening torques of the wheel nuts											
Check tyres for wear and check the air pressure if necessary											
Check wheels for damage											
Torque converter											
Change the gearbox oil for the torque converter											
Replace the gearbox oil filter for converter gear											
Drive axle											
Drive axle: Check mounting, check for leaks, and clean cooling fins											
Check the axle oil level, and change the axle oil											
Internal combustion engine											
Change the engine oil and the engine oil filter											
Check the condition of the internal combustion engine (visual inspection)											
Check the exhaust system for leaks											
Adjust the valve clearance/rocker lever											
Check the cooling system for leaks and correct function											
Check the coolant and top up if necessary											
Change the coolant											
Replace the belt											
Replace the air filter element											
Fuel system											
Change the fuel filter											

At operating hours											Carried out	
3000		6000		9000		12000		15000			✓	✗
Check the fuel lines and clips												
LPG system												
Check the LPG system for damage, check that the screw joints are securely seated, and check for leaks using leak detection spray												
Check the high-pressure relief valves (1.7 bar) and solenoid shut-off valve												
Change the LPG filter												
Overhaul the evaporator/pressure regulator, replace the sticker												
Check the CO content in the exhaust gas												
Check that the duration of engine run-on before the engine stops is acceptable												
Steering and steering axle												
Lubricate the rear wheel bearings												
Lubricate the steering axle and check for leaks												
Brake												
Check and adjust the service brake												
Check and adjust parking brake												
Check the oil level of the brake system												
Change the brake oil												
Electrical system												
Check the fuses												
Check lighting and indicator lights												
Check all power cable connections												
Hydraulics												
Check hydraulic system for condition, correct function and leaks												
Replace the filter cartridge for the hydraulic oil												
Check that the hydraulics blocking function (Isolation valve) is working correctly												
Lift mast												
Check the load chains for damage and wear. Adjust and lubricate the load chains												
Check the mast bearings for damage, and lubricate the mast bearings and check the tightening torque												
Check the mast profiles for damage and wear, and lubricate the mast profiles												
Check lift cylinders and connections for damage and leaks												
Check guide pulleys for damage and wear												

At operating hours										Carried out	
3000		6000		9000		12000		15000		✓	✖
Check support rollers and chain rollers for damage and wear											
Check tilt cylinders and connections for damage and leaks											
Check fork carriage for damage and wear											
Check fork arm interlock for damage and that it is working correctly											
Check that there is a safety screw on the fork carriage or on the attachment											
Check fork arms for wear and deformation											
Lubricate the rolling tracks and fork carriage runners											
Special equipment											
Heating system: Check the fresh air filter											
Heating system: Check for damage; observe the manufacturer’s maintenance instructions											
Check attachments for wear and damage; observe manufacturer's maintenance instructions											
Check trailer coupling for wear and damage; observe manufacturer's maintenance instructions											

Supply table

Unit	Recommended Quantity	Operating material	Specifications
Engine	9L	Engine oil	400MGX SAE15W-40 API CJ-4
Hydraulic transmission gear	9L	Transmission oil	Dexron III
Hydraulic system	35L for mast below (include) 4500mm mast	Hydraulic oil	≥-5℃:L-HM46
	35L for mast exceeding 4500mm mast		≥-5℃:L-HM46
	35L for mast below (include) 4500mm mast	Hydraulic oil	≥-20℃:L-HV32 (For cold storage use)
	35L for mast exceeding 4500mm mast		≥-20℃:L-HV32(For cold storage use)
Braking system	0.3L	Brake fluid	DOT-3
Bearings, lubricating grease fittings	0.05KG	Lubricating grease	NLGL 2# lithium grease
Drive axle	6L	Gear oil	-15℃~+49℃: GL-5-85W/90
			-25℃~+49℃:GL-5-80W/90 (For cold storage use)
Cooling system	9L	Coolant/water	The DEUTZ cooling system protection agent corresponds to quality class DEUTZ DQC CB-14.
Fuel		LP Gas	See section "Fuel-Specifications"

⚠ WARNING

Use of products with specifications lower than those set out in the table could cause damage to the truck not covered by the warranty.

Providing access to maintenance points

Opening the bonnet

⚠ WARNING

Risk of injury!

Switch off the engine before opening the bonnet!

⚠ CAUTION

When opening the bonnet, the driver's seat may be damaged if it is not in its forward most position.

Slide the driver's seat all the way forwards.

⚠ CAUTION

– Move the steering column (1) as far forwards as possible and secure; see section entitled "Adjusting the steering column".
– Slide the driver's seat (2) all the way forward; see section entitled "Adjustment of the driver’s seat".

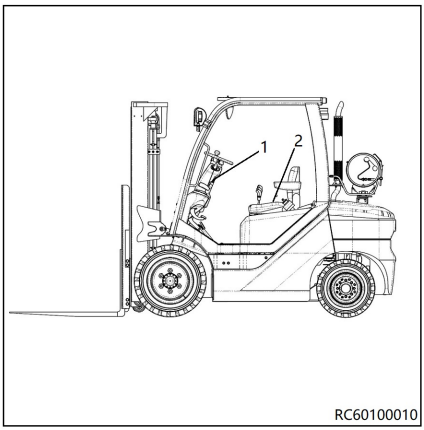

– Push the lever (3)on the engine bonnet upwards with your left hand. ▷

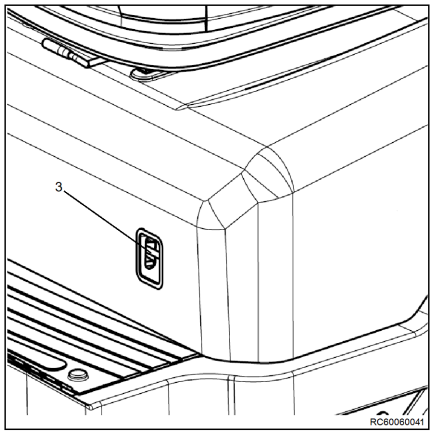

⚠ WARNING

Risk of injury from the bonnet lowering! The bonnet is fitted with a gas spring that holds the bonnet in the open position. When additional load is present, for example heavy objects, strong wind or other persons, the bonnet can lower suddenly. Cold weather and ageing can also reduce the performance of the gas spring and cause the bonnet to lower.

– If the force of the gas spring is deteriorating, replace the gas spring.
– To replace the gas spring, contact the authorised service centre.

Closing the bonnet

⚠ WARNING

When closing the bonnet, there is a risk of crushing!

When closing the bonnet, nothing must come between the bonnet and the edge of the chassis.

– Do not grasp any edges. Always close the bonnet by grasping one of the handles in each hand.

– Press the red button(4). ▷
– Pull down the bonnet until the lock audibly engages.
– Slide the driver's seat all the way forward; see section entitled "Adjustment of the driver’s seat".
– Move the steering column as far forwards as possible and secure; see section entitled "Adjusting the steering column".

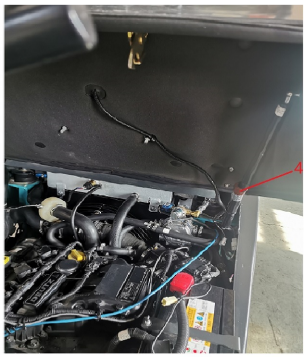

Installing and removing the bottom plate

Removing the bottom plate

⚠ CAUTION

Risk of short circuit if cables are damaged!

– Check the connection cables for damage.

– When removing and reinstalling the bottom plate, make sure that the connecting cables are not damaged.

NOTE

The bottom plate has a recess into which the operator can insert their fingers in order to lift it. The recess is beneath the rubber mat.

NOTE

The accelerator pedal is attached to the bottom plate and is removed with the bottom plate. The connecting plug for the accelerator is located underneath the bottom plate.

– Open the bonnet.

– Remove the rubber mat (1). ▷

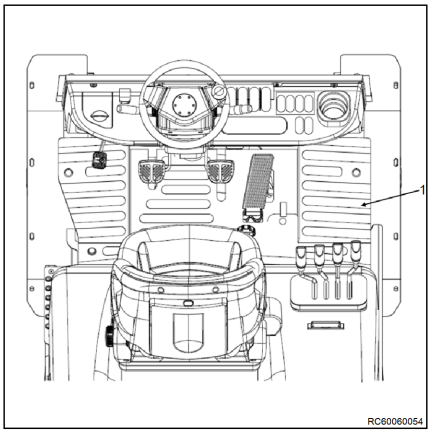

– Raise the bottom plate slightly.

– Pull out the bottom plate under the brake pedal and set it down upright.

– Remove the floor plate and place it in a secure location.

Installing the bottom plate

⚠ WARNING

Risk of crushing between the bottom plate and the frame edge!

If limbs or objects are between the bottom plate and frame edge when the bottom plate is closed, they can be crushed.

– Make sure that, when you close the bottom plate, there is nothing between the bottom plate and the frame edge.

– Set down the bottom plate upright in the foot well.

– Position the bottom plate at the front.

- Carefully guide the bottom plate down and close.
- Insert the rubber mat.
- Close the bonnet.

Maintenance service

Changing the engine oil

⚠ WARNING

Danger of burn injury!

If it is necessary to bleed the engine oil when the oil is still hot, avoid contact with the oil and wear eye protection to avoid burn injuries.

Failure to comply with regulations may result in death or serious injury.

⚠ CAUTION

Only use designated oil. Other types of oil may affect quality of use and shorten the service life of the engine or internal parts.

Avoid contamination of the engine by dirt or dust. Before removing the oil cap, carefully clean the oil cap/dipstick and surrounding areas.

Avoid mixing different brands of oil. Mixing different brands of oil will seriously affect lubrication.

Avoid overfilling. Overfilling may result in white smoke, over speed or internal damage.

⚠ CAUTION

Please pay attention to environmental protection. Dispose of used oil according to related laws and regulations. Failure to comply with laws and regulations will result in serious damage to the environment.

Comply with EPA guidelines or government measures for the correct handling of hazardous materials (such as oil, diesel and engine coolant).

Irresponsible handling of hazardous materials, such as dumping hazardous waste into water channels, on the ground, into groundwater or drainage ditches, is prohibited.

Drain the oil using the following steps:

– Ensure that the engine is in a horizontal position.

– Start the engine and run until it reaches operating temperature.

– Stop the engine.

– Remove the oil cap(1) to ventilate the crankcase. This is beneficial for bleeding the oil.

– Place an oil pan under the engine to collect the used oil.

▷

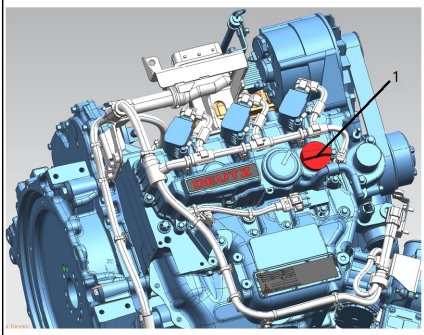

RC60040009

– Remove the oil drain plug(2) and allow the oil to flow into the collection container. When the oil has been drained completely, replace the oil drainage plug

▷

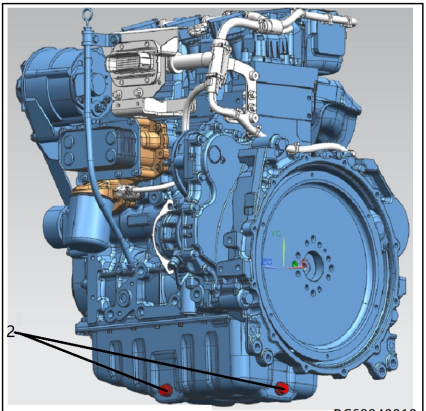

RC60040010

Component	Tightening torque
Drain plug	55 N.m

– Dispose of the used oil properly.

Filling up with engine oil

– Ensure that the engine is in a horizontal position.

– Remove the oil cap(1).

– Add our recommended genuine oil by dividing it into several portions for replenishment.

– Wait for about 1 ~ 2 minutes and then check the engine oil level.

– Check whether the oil is between the upper limit and the lower limit of the oil level gauge.

– Repeat the above process until the engine oil level reaches the appropriate level.

– Tighten the oil cap by hand. Over-tightening may damage the cap.

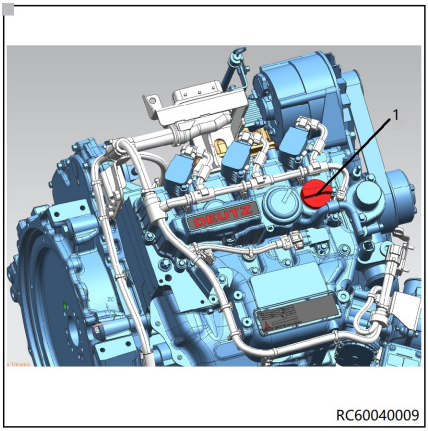

RC60040009

⚠ CAUTION

– Be careful not to let outer substances flow into the engine when replenishing engine oil.

– Exceeding the upper limit of the oil level gauge may cause engine faults. If you have exceeded the upper limit of the oil gauge, drain it until the engine oil level is indicated between the upper limit and the lower limit of the oil level gauge.

– Do not use unspecified engine oil additives.

Replacing the engine oil filter

– Remove the oil filter (1).

– Disassemble oil filter (1) with the filter wrench.

⚠ CAUTION

Oil in the filter may run down while detaching the oil filter. Be careful not to contaminate the other parts by using a cloth when detaching the filter. After replacing the oil filter, wipe clean any other parts which the oil has touched.

– Clean the mounting surface of the engine oil filter.

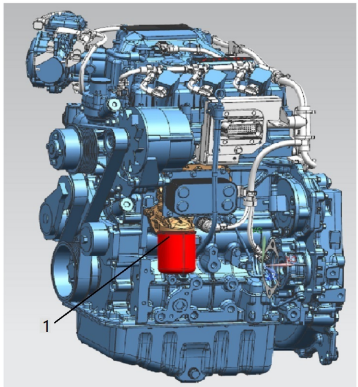

RC60040011

– Lightly spread engine oil over the seal of the new oil filter.

– Temporarily assemble the new oil filter by rotating it by hand.

– Assemble the oil filter with the filter wrench until the gasket is touching and tighten. Tighten torque: 10N.m ~ 12 N·m.

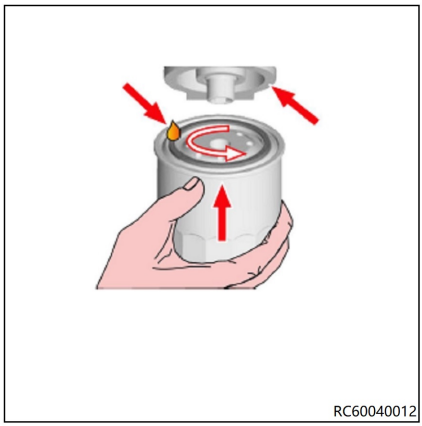

NOTE

Please refer to the engine spare parts manual to find the part number of usable engine oil filters.

– Fill the engine with engine oil according to the detailed instructions in "Filling up with engine oil".

Replacement of Coolant

General genuine coolant: 1 year or 1,200 hours.

Genuine LCC coolant: 3 years or 6,000 hours.

DANGER

– Never open the radiator cap while the engine is overheated. If the radiator cap is opened while the engine is overheated, hot water will spurt out and may cause serious burns. Open the radiator cap after ensuring that the engine has been cooled sufficiently.

– Mark and separately manage the containers for storing coolant from beverage containers to avoid confusion. If coolant is ingested, see a doctor immediately.

CAUTION

Be careful not to get coolant on any belts or electric apparatus when replacing the coolant.

Emptying the cooling system

– Make sure that engine and radiator are cooled.

– Place suitable collecting containers underneath.

- Remove the locking screw (1)in the crankcase. ▷
- Drain the coolant and cleanse the tank..
- Insert the locking screw (1)with a new sealing ring.
- Close cooler locking cap.

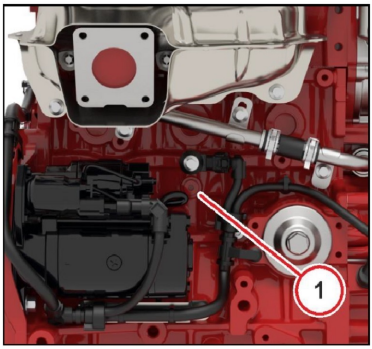

RC60040015

Fill and ventilate cooling system

⚠ DANGER

Danger of scalding from hot coolant! Cooling system under pressure! Only open the cap when cool!

- Open the cooling system cap (2)carefully. ▷
- Loosen the cooler venting screw if necessary.
- Fill coolant up to the max. mark or filling limit.
- Switch on any available heating and set to the highest level so that the heating circuit is filled and vented.
- Close cooler locking cap.
- Run engine up to operating temperature (opening temperature of the thermostat).
- Shut down engine until engine is cooled.
- Check coolant level in the cooled engine and top up to the MAX mark or filling level on the compensation tank if necessary.

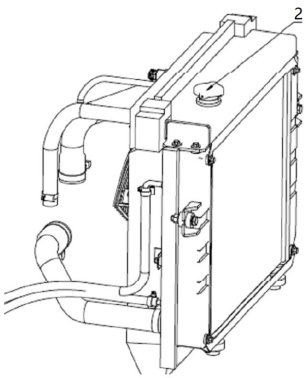

RC60040014

NOTE

Use recommended genuine antifreeze entitled "Engine coolant- Specifications"

⚠ CAUTION

- Do not mix antifreezes from different manufacturers.
- Do not mix the coolant with different concentrations.
- Do not add antitrust which is not recommended by us.
- As insufficient coolant concentration may cause corrosion or freezing, on the other hand, an excessive concentration may degrade the cooling performance. Mix coolant with 40% antifreeze and 3~5% additives (DCA4) to prevent corrosion.

NOTE

After replenishing coolant, check the coolant level of the supplementary tank for at least two or three days.

ENVIRONMENT NOTE

Discard exchanged coolant according to the regulations set forth by the relevant authorities. Disposing of exchanged coolant into the ground, sewers, drains, rivers, or the sea will cause serious environmental pollution. Violation of regulations regarding discard of engine oil without observing the handling regulations, will be punished.

Cleaning the radiator, checking for leaks

- Park the truck securely.
- Open the bonnet.

– Clean the radiator (1).

– Clean the radiator fins using a suitable brush and blow them out using compressed air (max. 2 bar).

– Check the radiator and coolant hoses for leaks and tighten the clips if necessary.

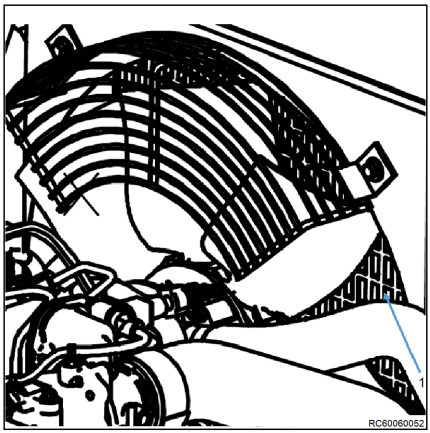

⚠ CAUTION

Risk of engine damage!

If the cooling fluid level is low, this indicates a leak in the cooling system.

– Check whether the leakage has been eliminated.

– If not, notify the authorised service centre.

– Close the bonnet.

Clean the air filter

Clogged filter inserts may have an adverse impact on engine performance. Make sure to periodically clean the air filter insert.

– Loosen the clip(2) and remove the air filter head cover(1).

– Pull out the air filter(3)

– Remove dust from the filter by blowing outward through the filter using compressed air(5). Remove dust using minimum air pressure in order to avoiding damaging the insert.

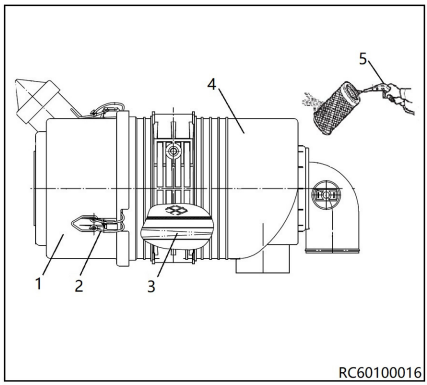

⚠ CAUTION

Flying object hazard!

Wear eye protection when carrying out maintenance on the engine and using compressed air or pressurised water jets, in order to prevent dust, flying debris, compressed air or pressurised water or gas from damaging your eyes.

Failure to follow this instruction may result in injury.

– Clean the air filter element every 200 hours.

– If the filter insert is damaged, heavily soiled or oily, replace it with a new insert. ▷

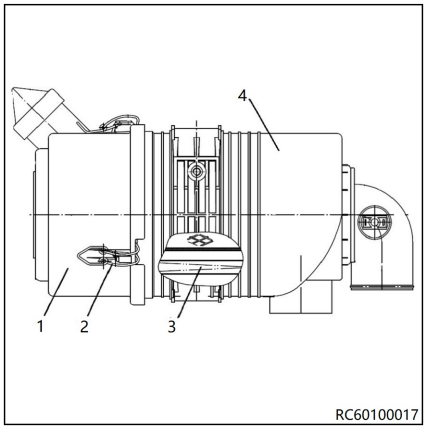

⚠ CAUTION

The air filter insert requires more frequent cleaning when the engine is running in dusty environments.

– Clean the inside of the air filter head cover(1).

– Fit the filter(3)in the air filter housing(4).

– Refit the air filter cover, and tighten the air filter head cover onto the air filter housing.

Change the air filter

– Open the bonnet.

– Press down the latch(5) ▷

– Push forward the bracket(6).

– Loosen the clip(2) and remove the filter cover(1).

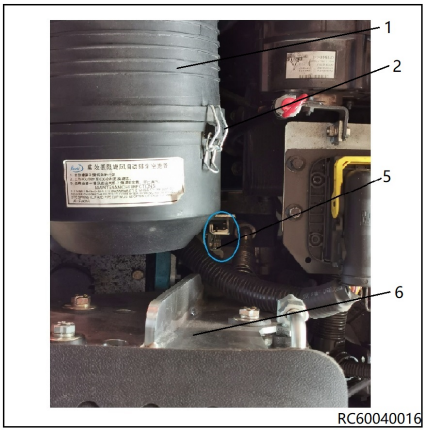

– Pull out the air filter (3) ▷

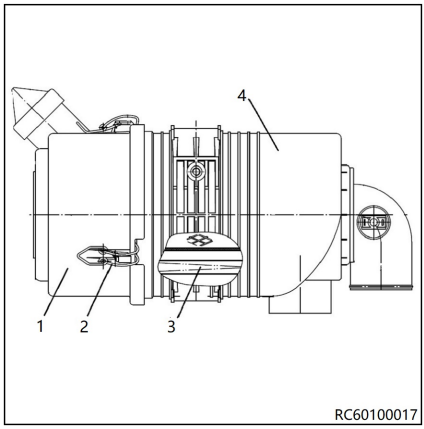

NOTE

Clean the inside of the air filter head cover(1).

– Ensure that the filter is not damaged during installation and that it is installed in the correct direction.
– Install the filter insert back into the air filter housing(4).
– Reinstall the air filter cover.

NOTE

Make sure to replace the air filter insert every 500 hours.

Check the belt and replace the belt

Check the belt drive

⚠ CAUTION

Only carry out work on the belt drive with the engine at a standstill! After repairs: Check that all protective equipment is mounted and all tools have been removed from the engine.

- Check the entire belt drive visually for damage.
- Renew damaged parts.
- Remount protective devices if necessary.
- Pay attention to correct fit of new belts, check the tension after running for 15 minutes.

Replace V-rib belt

- Press tensioning roller with socket wrench in the direction of the arrow until a retaining pin can be fixed in the assembly bore. The V-ribbed belt is now tension free.
- First pull the V-ribbed belt off the smallest roller or off the tensioning roller.
- Mount new V-ribbed belt.
- Retain tensioning pulley using the pin wrench and remove the holding pin.
- Tension V-ribbed belt using the tensioning roller and socket wrench. Check whether the V-ribbed belt is correctly in its guide.

▷

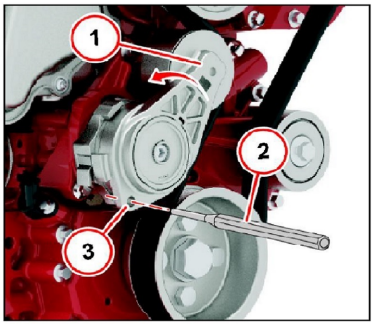

RC60040017

1 Tension pulley
2 Retaining pin
3 Assembly bore

Check the belt tension ▷

- Lower indicator arm (1)into the measuring device.
- Place guide (3)between two belt pulleys on the V-belt (2). The stop must be at the side.
- Press the button (4)at right angles to the V-belt (2)evenly until you hear or feel the spring snap in.
- Lift the measuring device carefully without altering the position of the indicator arm (1)).
- Read the measured value at the point of intersection (arrow), scale (5)and indicator arm (1).
- Retighten and repeat the measurement if necessary.

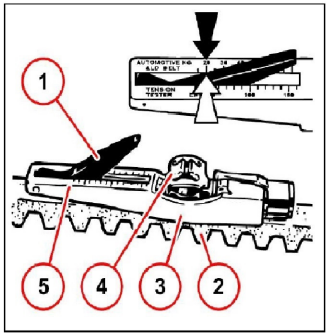

RC60040018

Changing the hydraulic transmission crude oil filter

ENVIRONMENT NOTE

Please follow the instructions for disposal of fluids and lubricants.

NOTE

Place a container under the crude oil filter to collect oil flowing out of the transmission.

- Remove the floorplate.
- Unscrew the fastening screws and washers on the crude oil filter.
- Slowly pull out the crude oil filter so that the oil flows into the container.
- Unscrew the crude oil filter from the oil filter seat.

– Unscrew the fastening nut on the crude oil filter; then remove the filter insert.
– Replace it with a new crude oil filter insert. Fit the filter insert followed by the bottom cover onto the filter spindle; then tighten the nut.
– Refit the crude oil filter to the gearbox using the fastening screws.
– Refit the floorplate.

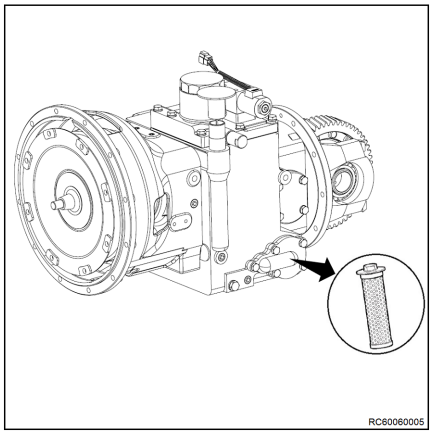

Replacing the fine hydraulic transmission oil filter

ENVIRONMENT NOTE

Please handle liquids and lubricating oil in accordance with instructions.

NOTE

If transmission oil flows out, a collection container should be placed underneath the fine oil filter.

– Remove the bottom plate.
– Unscrew the fine oil filter(1) from the hydraulic transmission.
– Install a new fine oil filter until tightly secured.
– Reinstall the bottom plate.

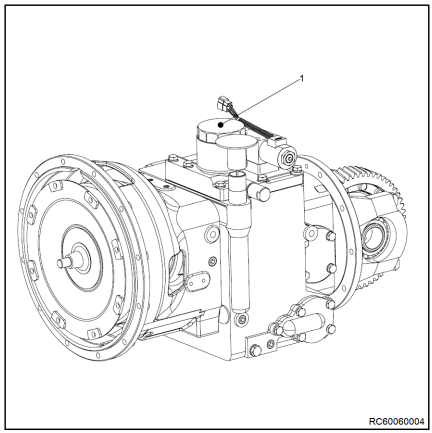

Changing the oil of the hydraulic transmission ▷

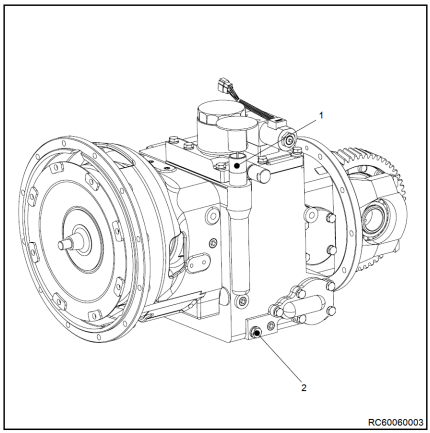

ENVIRONMENT NOTE

Observe precautions for handling fuel and lubricants

- Place a container under the right side of the truck chassis.
- Remove the floorplate.
- Unscrew the oil drain plug (2).
- Fully drain the oil of the gearbox transmission gear.
- Wipe the drain plug area clean.
- Refit the drain plug and washer.

ENVIRONMENT NOTE

Properly dispose of the waste hydraulic oil.

- Unscrew the filler cap (1).
- Add transmission oil through a filler pipe.
- Use the dipstick to check the transmission oil level, which should reach the upper mark on the dipstick.
- Reinstall the floorplate.
- Start the engine and run it in neutral for a while. After the engine stops running, recheck the oil level, which should be between the upper and lower marks on the dipstick. Also check the leak resistance of the oil tank.

NOTE

The filler cap also functions as a vent cap.

Changing the drive axle gearbox oil ▷

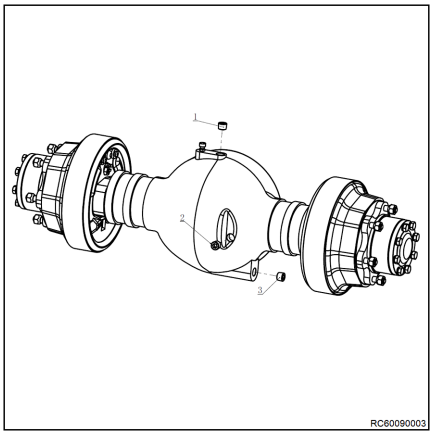

Emptying the gear oil

– Ensure the forklift truck is stopped on a level surface.

– Unscrew the plug of the oil filler port(1) so that the gear oil is easier to discharge.

– Place a container under the drive axle gearbox to collect the waste transmission oil.

– Remove the plug(3) and drain the gear oil. After all of the gear oil has been discharged from the gearbox, refit the plug.

ENVIRONMENT NOTE

Appropriately dispose of used gear oil.

Filling gear oil

– Unscrew the plugs of the oil filler port(1) and oil level hole(2).

– Fill the gearbox with new gear oil, until oil flows out of the oil level hole.

NOTE

- *The high viscosity of gear oil means that it takes time for new oil to fill the gaps in the gearing. It is therefore preferable to use a pressurised filling tool; otherwise the filling process will take a relatively long time. Even when oil flows out of the filler port, this does not mean that the oil level is full; wait 5-8 minutes until the gear oil fills the gaps in the gearing.*
- *Use gear oil in accordance with the referred instructions only.*

– Refit the plugs of the filler port and oil level hole.

Wheel replacement procedure

Rear wheel replacement procedure

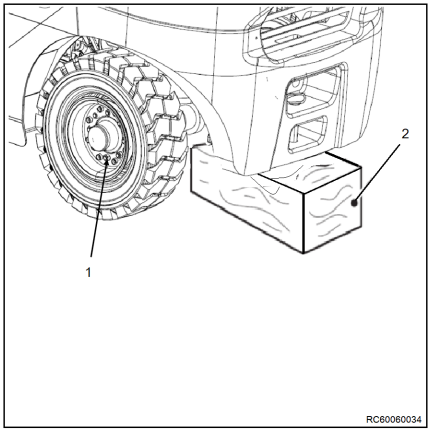

- Turn off the truck and perform the preliminary maintenance operations.
- Partially loosen the wheel fastening nuts (1).
- Raise the back of the truck by jack and arrange supports (2) under the ballast.
- Lower the truck so that it rests on the supports.
- Completely unscrew the nuts (1) and pull off the wheel.
- Fit the new wheel, positioning it in such a way that any inflation valve is always on the outside.
- Tighten the fastening nuts, following the three-stage sequence indicated in the relevant paragraph:
- Tighten the nuts slightly so that the wheel rests well on the hub.
- Tighten the nuts to 50% of the prescribed torque.
- Raise the truck to free the supports.
- Remove the supports.
- Lower the truck to the ground.
- Tighten the wheel nuts to full torque (see corresponding paragraph).
- When changing wheels with tyres, inflate to the prescribed pressure.

Front wheel change

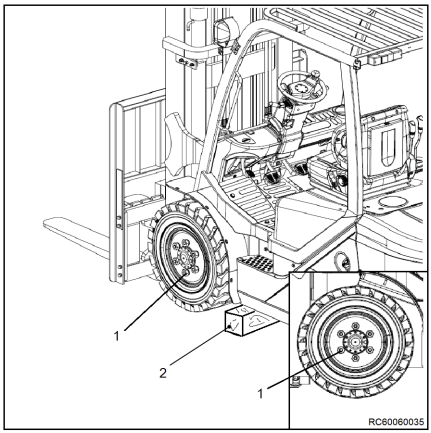

- Lift the fork arms to at least 1 m above the ground.
- Turn off the truck and perform the preliminary maintenance operations.
- Partially loosen the wheel fastening nuts (1).
- Insert a jack under the fixed stand of the lift or under the chassis frame on the side where the wheel is to be replaced.
- Block the rear wheels with wedges in order to avoid accidental movements of the truck in the reverse direction.
- Lift the front end of the truck with the jack and arrange supports (2) on the side of the wheel to be replaced.
- Lower the truck resting it on stable and solid supports (2) . Be careful not to rest it on the cylinder feed pipes.
- Completely unscrew the nuts (1) and pull off the wheel.
- Fit the new wheel, positioning it in such a way that any inflation valve is always on the outside.
- Tighten the fastening nuts, following the three-stage sequence indicated in the relevant paragraph:
- Tighten the nuts slightly so that the wheel rests well on the hub.
- Tighten the nuts to 50% of the prescribed torque.
- Raise the truck off the supports (2) .
- Remove the supports (2) .
- Lower the truck to the ground.
- Tighten the wheel nuts to full torque (see corresponding paragraph).
- When changing wheels with tyres, inflate to the prescribed pressure.

Change brake system liquid

ENVIRONMENT NOTE

Please handle liquids and lubricating oil in accordance with instructions.

NOTE

please contact your authorised dealer for drain and change brake system liquid.

- Capacity: approximately 0.3L.

CAUTION

Use a mistake and mixed with the brake liquid can cause the brake system seal unit rusty, even to the extent the brake out of order , serious consequences and so on.

Fill up the hydraulic oil

– Unscrew the oil cap (1)assembly. ▷

– Fill up with hydraulic oil through the oil inlet.

– Use the dipstick to check the oil level. The oil level should reach the upper marking on the dipstick.

– Close the bonnet.

– Start the engine and run it for a while. Check the oil level again. Check the seals.

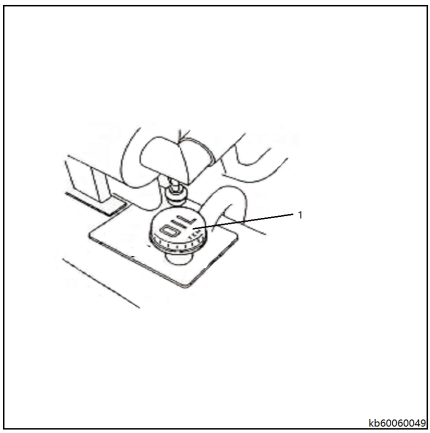

Checking the hydraulic oil level

ENVIRONMENT NOTE

Please follow the instructions for handling/disposal of fluids and lubricants.

NOTE

The oil level should only be checked with the lift mast vertical and the fork carriage lowered.

– Apply the parking brake.
– Open the engine cover.
– Screw the oil cap with dipstick.
– Use a clean cloth to dry the dipstick(1) ▷
– The oil level should be between the upper and lower markings on the dipstick.

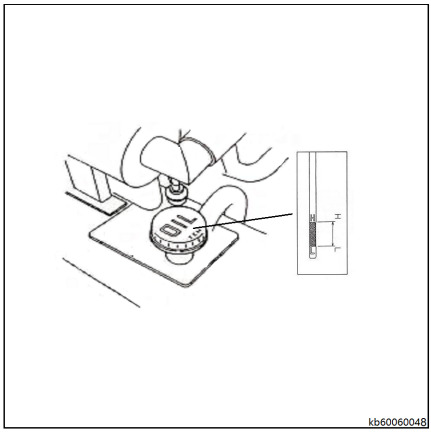

WARNING

The hydraulic oil must be checked while the engine is stopped and the forklift is in horizontal level,

– When required, fill the hydraulic oil up to the upper marking.
– Re-fit the oil dipstick.
– Safely refit the engine cover.

Changing the suction filter

ENVIRONMENT NOTE

Please follow the instructions for disposal of fluids and lubricants.

NOTE

The hydraulic oil will flow out. Place an oil pan under the filter.

– Open the engine cover.
– Remove the pedal pad and bracket.
– Slacken off the fastening bolts and washers on the cover assembly, then remove the cover assembly.
– Slowly pull out the cover assembly so that the oil flows back into the tank.

– Unscrew the suction filter (1) from the cover assembly. ▷
– Screw in the new intake filter until tightened.
– Refit the cover assembly to the frame using the fastening screws.
– Refit the bracket and pedal pad.
– Refit the engine cover.

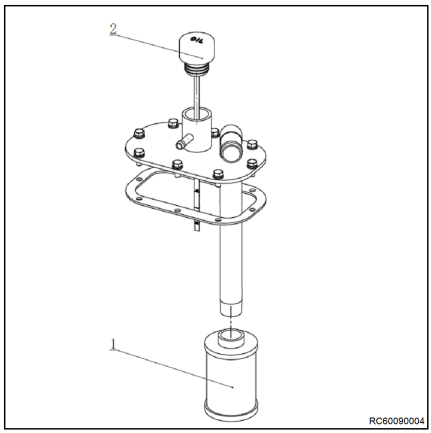

Replacing the breather filter

ENVIRONMENT NOTE

Please handle liquids and lubricating oil in accordance with instructions.

– Open the bonnet.
– Unscrew the breather filter (2) and dipstick and remove. ▷
– Remove the dipstick and balls on the dipstick base from the breather filter and mount onto the new the breather filter.
– Screw the breather filter and dipstick back into position.
– Close the bonnet.

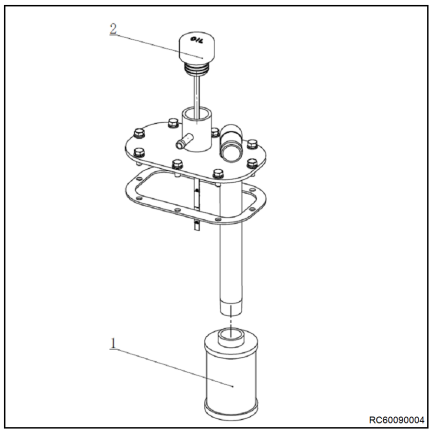

NOTE

Respirators may need to be replaced more frequently in dusty environments.

Removing the forks

⚠ WARNING

Manual handling risk. The forks are heavy.

Care should be taken when removing the forks.

- Apply parking brake.
- Tilt the mast fully forward and lower the forks to approximately 150 mm from the ground.
- Remove the fork carriage centre stop bolt.
- Release the fork latch (1) and slide fork to centre groove of carriage. ▷
- Carefully lower the fork onto suitable wooden pallet, make sure it detaches from the top of the carriage plate.
- Release the parking brake and drive truck slowly away from the fork, first ensuring that it is clear of the fork carriage.
- Repeat procedure for the other fork.

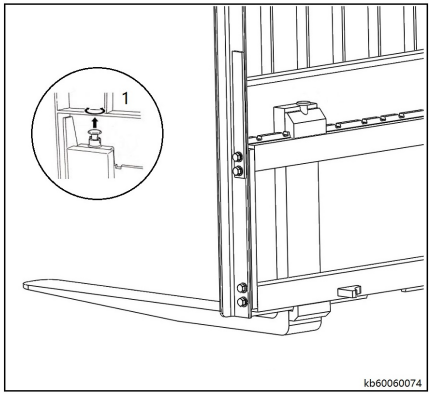

NOTE

It will assist with sliding the forks along the carriage, to lightly grease its top and bottom faces.

Fitting the forks

- Loosen the centre stop bolt.
- Tilt the mast forward until the fork is attached to the centre groove of the carriage.
- Apply the parking brake.
- Tilt back the mast and raise the fork carriage slowly with the fork located on the carriage.
- Ensure that it is secured before sliding it along the carriage.

– Release the fork latch (1) and slide the fork to the required position.
– Refit the knob by engaging it in one of the notches on the fork carriage.
– Repeat the operation for the other fork and fit the centre stop bolt.

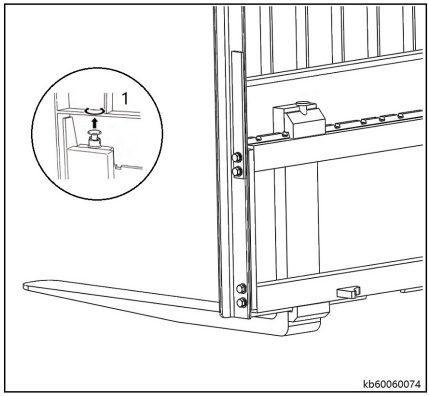

NOTE

The forks must be equidistant from the centre-line of the fork carriage.

Checking the fork arms for wear and deformation

CAUTION

The fork arm check must be carried out thoroughly by expert personnel, in order to detect all damage, breakage, deformation, etc., which could reduce safety in use.

– Check the thickness of the fork arm blade at a point between the end of the taper and heel of the fork arm.
– Measure the sample section (ZC) as indicated in the drawing and compare it with sections A, B, C. Maximum wear permitted at points A, B, C, is 10% compared with the sample section.

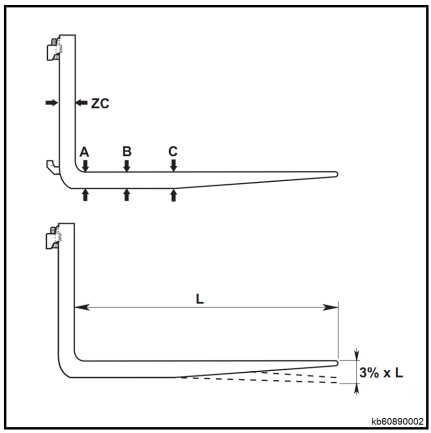

The forks should be withdrawn from service if the blade has been worn to 90% of it's original thickness.

NOTE

The shank of the fork can be used as a guide to it's original thickness. It is advisable to use a wear gauge to assist in this measurement.

– With the fork arms mounted on the plate in the working position, check that the height difference of the tips is not greater than 3% of the length of the same. E.g.: length (L) cm 120 = (120 x 3/100) = 3.6cm.

– Visually check that there are no cracks on the fork arms, especially in the fork heel and attachment areas. In case of doubt, check using a dye penetrant test.

– Replace damaged parts if necessary.

Checking the operation and installation of the lift mast, lifting chain and limit block

▷

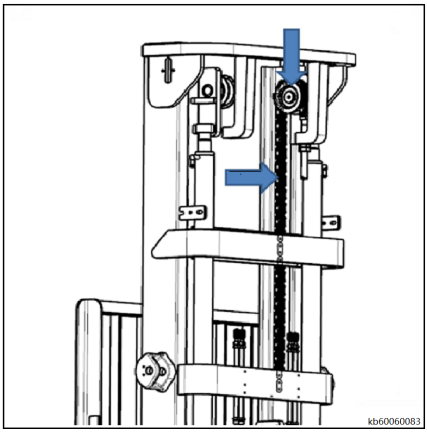

– Clean the mast channel and lifting chains.

– Check the working status of the lifting chains, along with any signs of abrasion, paying particular attention to the area around the chain wheels.

– Check that the chain fixed pins are secure.

– Replace damaged lifting chains.

– Check the status and tightness of the lift mast column, mast channel surfaces and roller.

– Check the status and working condition of the limit block.

– Check the tightness of the elastic retaining rings at the piston rod connections on top of the lift mast.

Lubricate the lift mast and chains with chain spray

▷

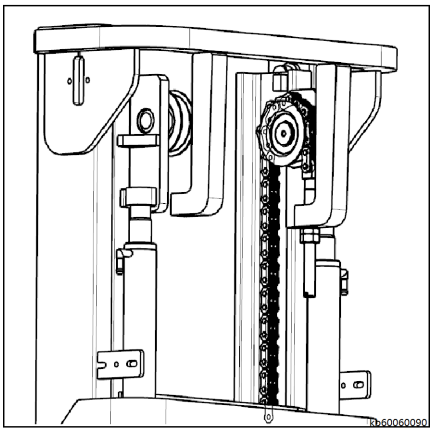

NOTE

If there is excessive dust on the chain affecting the ability of the lubricant to permeate the chain, the lifting chain must be cleaned.

– Place an oil collecting trough under the lift mast

– Carry out cleaning with an alkyl derivative such as an industrial diesel fuel cleaning agent (please comply with the manufacturer's safety instructions).

– Additives may not be used if using a steam nozzle.

– Immediately blow the chain dry after cleaning to remove water both on the chain surface and inside the hinge pins. Move the chain several times during the blow-drying process.

– Immediately apply chain spray and keep the chain moving while doing so.

NOTE

The lifting chains are a safety component. The use of cold cleaning agents, chemical cleaning agents, corrosive liquids or liquids containing acid or chlorine will cause direct damage to the chains.

CAUTION

For safety reasons, wear safety equipment while working at height.

Lubricating the lift mast and tilt cylinder bearings

NOTE

Lubricate using lubricating grease only.

– Lower the fork carriage fully.

– Using lubricating grease, lubricate the grease nipples (1)on the left and right tilt cylinder pivots at the drive axle from above. ▷

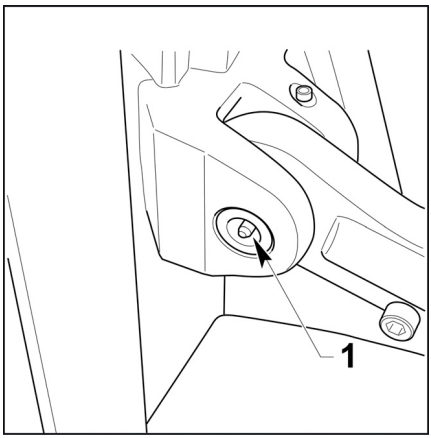

– Using lubricating grease, lubricate the grease nipples (2)on the left and right tilt cylinder pivots at the chassis from above.

▷

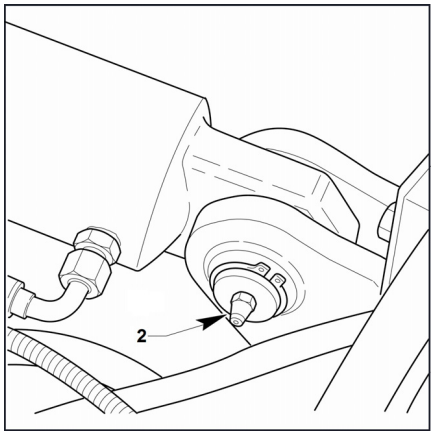

– Inject grease into the lift mast grease nozzles on the left and right sides of the frame (3).
– Lubricate using a grease gun until fresh grease comes out of the bearings.
– Refit the floor plate and then the engine cover.

▷

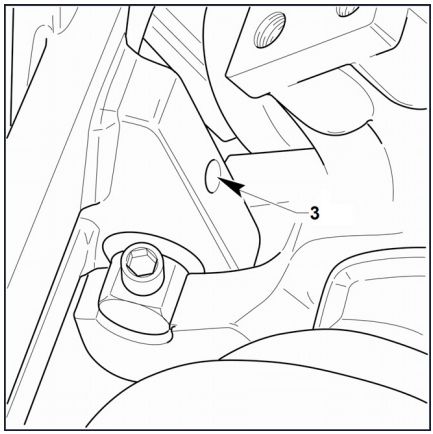

Adjusting the length of the lift chains, and lubricating using chain spray

Adjusting the length of the lift chains* ▷

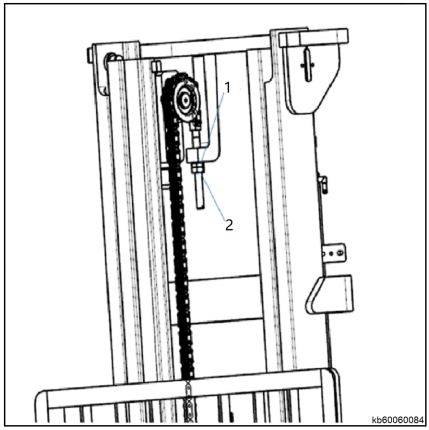

NOTE

As lift chains stretch with use, they must be adjusted, both on the left and right hand side.

– Completely lower the mast.

– Loosen the locknut (2).

– Adjust chain length with the adjusting nut (1) at the chain anchor.

NOTE

While the mast is in vertical position, and the forks is lowered to the ground, ensure the lifting chain is in tight state. If not, adjust it until rectified.

– Tighten the locknut (2).

– Also adjust the second chain.

* Standard mast only

⚠ CAUTION

For safety reasons, wear safety equipment while working at height.

Adjusting the length of the lift chains* ▷

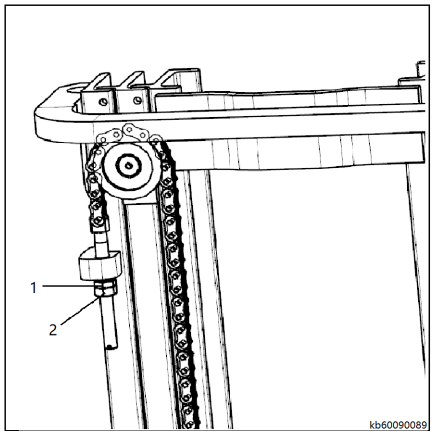

NOTE

Use over time will cause the lift chains to stretch, therefore it is necessary to check and adjust their lengths.

– Completely lower the mast.

– Loosen the locknut (2).

– Adjust chain length with the adjusting nut (1) at the chain anchor.

NOTE

While the mast is in vertical position, and the forks is lowered to the ground, ensure the lifting chain is in tight state. If not, adjust it until rectified.

– Tighten the locknut (2).

* Completely free lifting and triplex masts only

⚠ CAUTION

For safety reasons, wear safety equipment while working at height.

Lubricating the chains with chain spray

– Use specified chain spray to coat the chains and channel surfaces.

NOTE

If the truck is used in the food industry, please use lubricating grease in place of spray.

Checking the structure of the overhead guard

NOTE

Modification in overhead guard is not allowed without getting the approval from the manufacturer.

Check the structure of the overhead guard for no damage and transparent material forms the part of the overhead guard structure shall not

exceed 20 mm vertical deformation. Otherwise it shall be replaced accordingly. The replacement shall be done by authorized service.

6

Technical datasheet

Dimensions

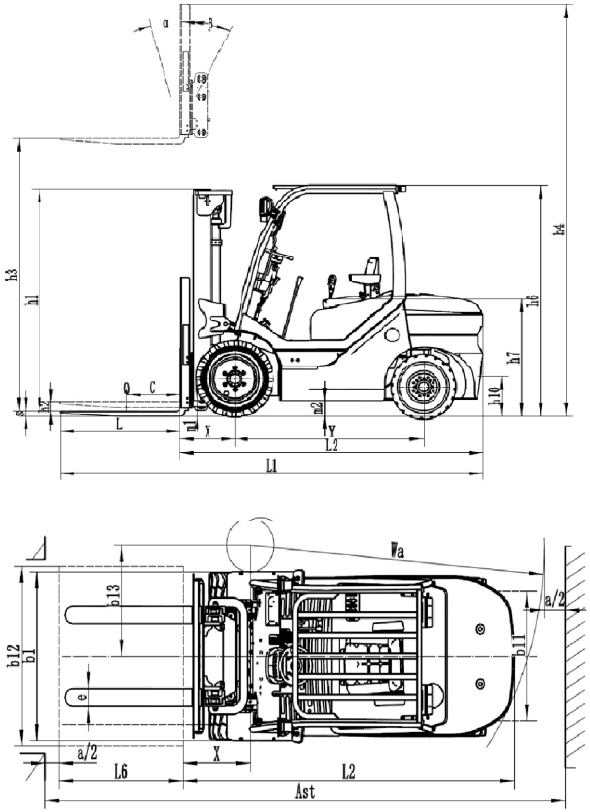

RC60100007

VDI Datasheet for RCG15

NOTE

This VDI data sheet specifies only the technical values of the truck version with standard equipment. Different tyres, lift masts, additional units etc. may produce different values.

Characteristics		
Manufacturer		STILL
Model		RCG15
Power type：Electric-Diesel-Petrol-LPG-Network Power (Electric)		LPG
Operation Type:Hand-stand on-Driver seated		Seated
Load Capacity	Q (kg)	1500
Load centre of gravity distance	c (mm)	500
Axle centre to fork face	x (mm)	435
Wheel Base	y (mm)	1500
Weights		
Service Weight	Kg	3095
Axle loading, laden front/rear	Kg	3800/800
Axle loading, unladen front/rear	Kg	1080/2020
Wheels, chassis frame		
Tyres:SE-Super elastic PN-Pneumatic		SE
Front Tyres Size		6.50-10-14PR
Rear Tyres Size		5.00-8-10PR
Front Track Width	b10 [mm]	940
Rear Track Width	b11 [mm]	920
Dimension and overall sizes		
Mast lift, forward/backward	α/β	6°/12°
Mast Minimum Overall Height	h1 [mm]	2002
Free lift	h2 [mm]	128
Lift height	h3 [mm]	3000
Mast Maximum Overall Height	h4 [mm]	4040
Overhead Guard Height	h6 [mm]	2085
Seat Height	h7 [mm]	1140
Drawbar Height	h10 [mm]	220
Overall Length	l1 (mm)	3282
Length to Face of Forks	l2 (mm)	2362
Overall Width	b1 [mm]	1140
Fork Arm Dimensions	s/e/l (mm)	35/100/1070

Fork Carriage in Compliance with ISO 2328 Class/Form A,B		II A
Fork Carriage Width	b3 (mm)	1040
Ground Clearance below Mast(laden)	m1 (mm)	110
Ground Clearance at Centre of Wheelbase(laden)	m2 (mm)	105
Working aisle width with pallet 1000 x 1200 crossways****	Ast (mm)	3795
Working aisle width with pallet 800 x 1200 crossways****	Ast (mm)	3995
Turning Radius	Wa (mm)	2160
Turning Point Minimum Distance from the Truck Center Line	b13 (mm)	601
Performance data		
Driving speed (with/without load)	km/h	16/16
Lifting speed (with/without load)	m/s	0.55/0.61
Lowering speed (with/without load)	m/s	0.48/0.43
Drawbar Pull Tractive Effort (at 2km/h) with/without load	KN	16/10
Gradeability (at 2km/h) laden/unladen	%	20/20
Acceleration time, laden/unladen	S	4.8/4.3
Service Brake		Mechanical/Hydraulic
Engine		
Engine Type		Deutz G2.2
Engine Power in compliance with ISO 1585	kW	40
Rated Number of Revolutions	rpm/min	2600
Cylinder Number/Displacement	cm^3	3/2200
Emission level according to EU-regulation 2016/1628		Stage V
Fuel consumption according to VDI 2198-2019 (EN16796)	l/h	2.8
Vehicle electrical system voltage	V	12
Others		
Drive Control Type		Electron hydraulic torque converter
Operating pressure for attachments	bar	165
Oil volume for attachments	l/min	23
Sound pressure level at the driver's seat EN12053	dB (A)	80
Sound power level during the workcycle EN12053	dB (A)	100

Full body vibration acceleration acc to EN13059	m/s2	1.2
Towing coupling, type DIN15170		Bolt

VDI Datasheet for RCG18

NOTE

This VDI data sheet specifies only the technical values of the truck version with standard equipment. Different tyres, lift masts, additional units etc. may produce different values.

Characteristics		
Manufacturer		STILL
Model		RCG18
Power type : Electric-Diesel-Petrol-LPG-Network Power (Electric)		LPG
Operation Type:Hand-stand on-Driver seated		Seated
Load Capacity	Q (kg)	1800
Load centre of gravity distance	c (mm)	500
Axle centre to fork face	x (mm)	435
Wheel Base	y (mm)	1500
Weights		
Service Weight	Kg	3255
Axle loading, laden front/rear	Kg	4370/680
Axle loading, unladen front/rear	Kg	1320/1930
Wheels, chassis frame		
Tyres:SE-Super elastic PN-Pneumatic		SE
Front Tyres Size		6.50-10-14PR
Rear Tyres Size		5.00-8-10PR
Front Track Width	b10 [mm]	940
Rear Track Width	b11 [mm]	920
Dimension and overall sizes		
Mast lift, forward/backward	α/β	6°/12°
Mast Minimum Overall Height	h1 [mm]	2002
Free lift	h2 [mm]	128
Lift height	h3 [mm]	3000
Mast Maximum Overall Height	h4 [mm]	4040
Overhead Guard Height	h6 [mm]	2085
Seat Height	h7 [mm]	1140
Drawbar Height	h10 [mm]	220
Overall Length	l1 (mm)	3316
Length to Face of Forks	l2 (mm)	2396
Overall Width	b1 [mm]	1140
Fork Arm Dimensions	s/e/l (mm)	35/100/1070

Fork Carriage in Compliance with ISO 2328 Class/ Form A,B		II A
Fork Carriage Width	b3 (mm)	1040
Ground Clearance below Mast(laden)	m1 (mm)	110
Ground Clearance at Centre of Wheelbase(laden)	m2 (mm)	105
Working aisle width with pallet 1000 x 1200 cross-ways****	Ast (mm)	3815
Working aisle width with pallet 800 x 1200 cross-ways****	Ast (mm)	4015
Turning Radius	Wa (mm)	2180
Turning Point Minimum Distance from the Truck Center Line	b13 (mm)	601
Performance data		
Driving speed (with/without load)	km/h	16/16
Lifting speed (with/without load)	m/s	0.55/0.61
Lowering speed (with/without load)	m/s	0.48/0.43
Drawbar Pull Tractive Effort (at 2km/h) with/without load	KN	16/10
Gradeability (at 2km/h) laden/unladen	%	20/20
Acceleration time, laden/unladen	S	4.8/4.3
Service Brake		Mechanical/Hydraulic
Engine		
Engine Type		Deutz G2.2
Engine Power in compliance with ISO 1585	kW	40
Rated Number of Revolutions	rpm/min	2600
Cylinder Number/Displacement	cm^3	3/2200
Emission level according to EU-regulation 2016/1628		Stage V
Fuel consumption according to VDI 2198-2019 (EN16796)	kg/h	2.9
Vehicle electrical system voltage	V	12
Others		
Drive Control Type		Electron hydraulic torque converter
Operating pressure for attachments	bar	165
Oil volume for attachments	l/min	23
Sound pressure level at the driver's seat EN12053	dB (A)	80
Sound power level during the workcycle EN12053	dB (A)	100
Full body vibration acceleration acc to EN13059	m/s2	1.2
Towing coupling, type DIN15170		Bolt

VDI Datasheet for RCG20

NOTE

This VDI data sheet specifies only the technical values of the truck version with standard equipment. Different tyres, lift masts, additional units etc. may produce different values.

Characteristics		
Manufacturer		STILL
Model		RCG20
Power type : Electric-Diesel-Petrol-LPG-Network Power (Electric)		LPG
Operation Type:Hand-stand on-Driver seated		Seated
Load Capacity	Q (kg)	2000
Load centre of gravity distance	c (mm)	500
Axle centre to fork face	x (mm)	435
Wheel Base	y (mm)	1500
Weights		
Service Weight	Kg	3360
Axle loading, laden front/rear	Kg	4500/840
Axle loading, unladen front/rear	Kg	1280/2080
Wheels, chassis frame		
Tyres:SE-Super elastic PN-Pneumatic		SE
Front Tyres Size		6.50-10-14PR
Rear Tyres Size		5.00-8-10PR
Front Track Width	b10 [mm]	940
Rear Track Width	b11 [mm]	920
Dimension and overall sizes		
Mast lift, forward/backward	α/β	6°/12°
Mast Minimum Overall Height	h1 [mm]	2002
Free lift	h2 [mm]	128
Lift height	h3 [mm]	3000
Mast Maximum Overall Height	h4 [mm]	4040
Overhead Guard Height	h6 [mm]	2085
Seat Height	h7 [mm]	1140
Drawbar Height	h10 [mm]	220
Overall Length	l1 (mm)	3490
Length to Face of Forks	l2 (mm)	2420
Overall Width	b1 [mm]	1140
Fork Arm Dimensions	s/e/l (mm)	45/100/1070

Fork Carriage in Compliance with ISO 2328 Class/ Form A,B		II A
Fork Carriage Width	b3 (mm)	1040
Ground Clearance below Mast(laden)	m1 (mm)	110
Ground Clearance at Centre of Wheelbase(laden)	m2 (mm)	105
Working aisle width with pallet 1000 x 1200 cross-ways****	Ast (mm)	3835
Working aisle width with pallet 800 x 1200 cross-ways****	Ast (mm)	4035
Turning Radius	Wa (mm)	2200
Turning Point Minimum Distance from the Truck Center Line	b13 (mm)	601
Performance data		
Driving speed (with/without load)	km/h	16/16
Lifting speed (with/without load)	m/s	0.55/0.61
Lowering speed (with/without load)	m/s	0.48/0.43
Drawbar Pull Tractive Effort (at 2km/h) with/without load	KN	16/10
Gradeability (at 2km/h) laden/unladen	%	20/20
Acceleration time, laden/unladen	s	4.8/4.3
Service Brake		Mechanical/Hydraulic
Engine		
Engine Type		Deutz G2.2
Engine Power in compliance with ISO 1585	kW	40
Rated Number of Revolutions	rpm/min	2600
Cylinder Number/Displacement	cm^3	3/2200
Emission level according to EU-regulation 2016/1628		Stage V
Fuel consumption according to VDI 2198-2019 (EN16796)	kg/h	3
Vehicle electrical system voltage	V	12
Others		
Drive Control Type		Electron hydraulic torque converter
Operating pressure for attachments	bar	165
Oil volume for attachments	l/min	23
Sound pressure level at the driver's seat EN12053	dB (A)	80
Sound power level during the workcycle EN12053	dB (A)	100
Full body vibration acceleration acc to EN13059	m/s2	1.2
Towing coupling, type DIN15170		Bolt

Mast specifications

mast type	max.height	Rated capacity load center 500mm			height		free-lift height		mast angle
		1.5T	1.8T	2.0T	closed height	height with carriage	without carriage	with carriage	front/ back
VM Standard wide-view	3000	1500	1800	2000	2002	4041	128	128	6/12
	3300	1500	1800	2000	2152	4341	128	128	
	4000	1500	1800	2000	2552	5041	128	128	6/8
	4500	1500	1800	2000	2802	5541	128	128	6/6
	5000	1500	1800	2000	3052	6041	128	128	3/6
VFM Full free duplex	3000	1500	1800	2000	2002	4041	1411	1001	6/12
	3500	1500	1800	2000	2152	4541	1561	1151	
	4000	1500	1800	2000	2552	5041	1961	1551	6/8
VFHM Full free triplex	4350	1500	1800	2000	2102	5391	1489	1101	6/6
	4500	1500	1800	2000	2152	5541	1539	1151	
	4700	1500	1800	2000	2217	5741	1604	1216	
	4800	1500	1800	2000	2252	5841	1639	1251	
	5000	1386	1686	1886	2395	6041	1782	1394	
	5400	1100	1400	1600	2595	6441	1982	1594	3/6
	5500	1024	1324	1524	2629	6541	2016	1628	
	6000	722	1022	1172	2862	7041	2249	1861	

A

Additional capacity rating plate for attachments. 38
Address of manufacturer and contact details. I
Adjusting the length of the lift chains, and lubricating using chain spray. 172
Adjusting the seat and seat belt. 79
Adjusting the steering column. 83
After washing. 127
Attachments
  Fitting. 36
  Hydraulic connection. 36
  Mechanical connection. 36

B

Battery acid. 31
Before lifting a load. 99
Brake diagrams. 196

C

Capacity Chart. 98
Change brake system liquid. 164
Change the air filter. 155
Change the LP-gas tank. 70
Changing direction of travel. 90
Changing the drive axle gearbox oil. . . . 161
Changing the engine oil. 148
Changing the hydraulic transmission crude oil filter. 158
Changing the oil of the hydraulic transmission. 160
Changing the suction filter. 165
Checking condition and performance. . . . 78
Checking the cap on the high-pressure relief valve on the outside of the LPG system. 59
Checking the drive axle gearbox oil. 69
Checking the fork arms for wear and deformation. 168
Checking the hydraulic oil level. 70, 164
Checking the operation and installation of the lift mast, lifting chain and limit block. 169
Checking the structure of the overhead guard. 173
Check the belt drive. 157
Check the brake fluid level. 68
Check the condition and operation of chain. 64
Check the coolant level. 65
Check the engine oil level. 67
Check the wheel nuts for correct condition. 63
Cleaning the electrical system. 125
Cleaning the radiator, checking for leaks. 153
Cleaning the truck. 123
Clean the air filter. 154
Climbing on/off the forklift. 78
Closing the bonnet. 145
Competent person. 16
Conformity marking. 6
Consumables. 33
  Disposal. 32
  Safety information for handling battery acid. 31
  Safety information for handling oils. . . 30
  Safety information for hydraulic fluid. . 31

D

Daily checks before use. 59
Danger area. 99
Definition of terms used for responsible persons. 16
Description of use and climatic conditions. . 5
Determining visibility conditions when driving with a load. 108
Dimensions. 176
Direction selection lever. 86
Display unit. 45
Disposal of old trucks. 122
Disposing of components and batteries. . . 33
Drivers. 17
Driving. 87
  Ascending gradients. 110
  Descending gradients. 110
Driving brake pedal and inching pedal. . . . 91
Driving on lifts. 111
Driving on loading bridges. 113

E

EC declaration of conformity in accordance with the Machinery Directive. 8
Electric schematic diagram for DEUTZ G2.2 engine—with ISO3691 function. . 194
EMC – Electromagnetic compatibility. 7
Emissions. 35
Engine coolant specifications. 75
Engine plate. 48

F

Fastening the seat belt. 80
Fill up the hydraulic oil. 164
Fire extinguisher. 13
Fitting the forks. 167
Forklift towing. 117
Fuel- LPG. 75

G

General front view. 42
General information. 2
General rear view. 43

H

Handling consumables. 33
Handling gas springs and accumulators. . 28
Hydraulic diagram with ISO3691 func-
tion(Side operation). 195
Hydraulic fluid. 31

I

Ignition device. 84
Improper use. 4, 19
Installing the bottom plate. 146
Insurance cover on company premises. . . . 2
Intended use. 3

L

Leaving the truck. 118
Leaving the truck temporarily. 117
Lighting and turn indicator switch. 84
Load
Transporting. 107
Load centre distance and load capacity. . 97
Loading and unloading the truck. 55
Location of the decals. 50
Lubricate the lift mast and chains with
chain spray. 126, 169
Lubricating the lift mast and tilt cylinder
bearings. 170

M

Maintenance - 3000 hours. 140
Maintenance work without special qualifi-
cations. 133
Maintenance — 1000 hours/annually. . . 137
Maintenance — 500 hours. 135
Manually lowering the fork arms. 38
Mast specifications. 184
Modifications to the truck. 5

N

Nameplate. 46

O

Oils. 30
Opening the bonnet. 144
Opening the tap of the gas bottle or gas
tank. 77
Operating attachments. 95
Operating company. 16
Operating permit. 2
Operating safely. 13
Operating the lifting device. 94
Operating the service brake. 91
Overview of the driver’s compartment. . . . 44

P

Packaging. 34
Parking brake. 92
Personnel qualifications. 133
Picking up a load. 103
Pre-shift checks. 58

R

Recommissioning after storage. 129
Regular inspections. 19
Regular safety inspection. 12
Regulations. 12
Removing the bottom plate. 146
Removing the forks. 167
Removing the mast. 54
Replacement of Coolant. 151
Replacing the breather filter. 166
Replacing the engine oil filter. 150
Replacing the fine hydraulic transmission
oil filter. 159
Residual risks. 22

S

Safety guidelines. 13
Safety information
Active medical equipment. 14
Gas springs. 14
Non-ionising radiation. 14

Speed reduction. 13
Welding work. 13
Safety information on the LPG system. . . 35
Safety inspection. 19
Safety regulations when driving. 24
Safety regulations when handing loads. . . 97
Seat belt
Fastening. 81
Fastening on a steep slope. 81
Malfunction due to cold weather conditions. 82
Releasing. 82
Seat belt monitoring and alarm function. . 83
Seat belt status and performance checks. 61
Serial number. 46
Stability. 22
Start the engine. 86
Storage
Recommissioning. 129
Supply table. 143
Symbols. 5

T

The emergency exit of the cab. 38
Three-way catalytic converter plate 49
Tip-over of the truck. 23
Towed load. 116
Transmission oil level inspection procedure. 69
Transporting pallets. 99
Transporting suspended loads. 100
Transport of swinging loads. 112
Truck Storage. 120

U

UK-Importer. 47
Use a truck or flatbed trailer to carry the forklift truck. 54

V

VDI Datasheet for RCG18. 180
VDI Datasheet for RCG20. 182
VDI Datasheet for RCG42_15. 177

W

Warnings. 5

STILL GmbH

60048011601 EN - 04/2023 - 08

Original instructions

LPG forklift truck

RCG15
RCG18
RCG20

4214 4215 4216

first in intralogistics

60048011601 EN - 04/2023 - 08

7

Diagrams

Electric schematic diagram for DEUTZ G2.2 engine—with ISO3691 function

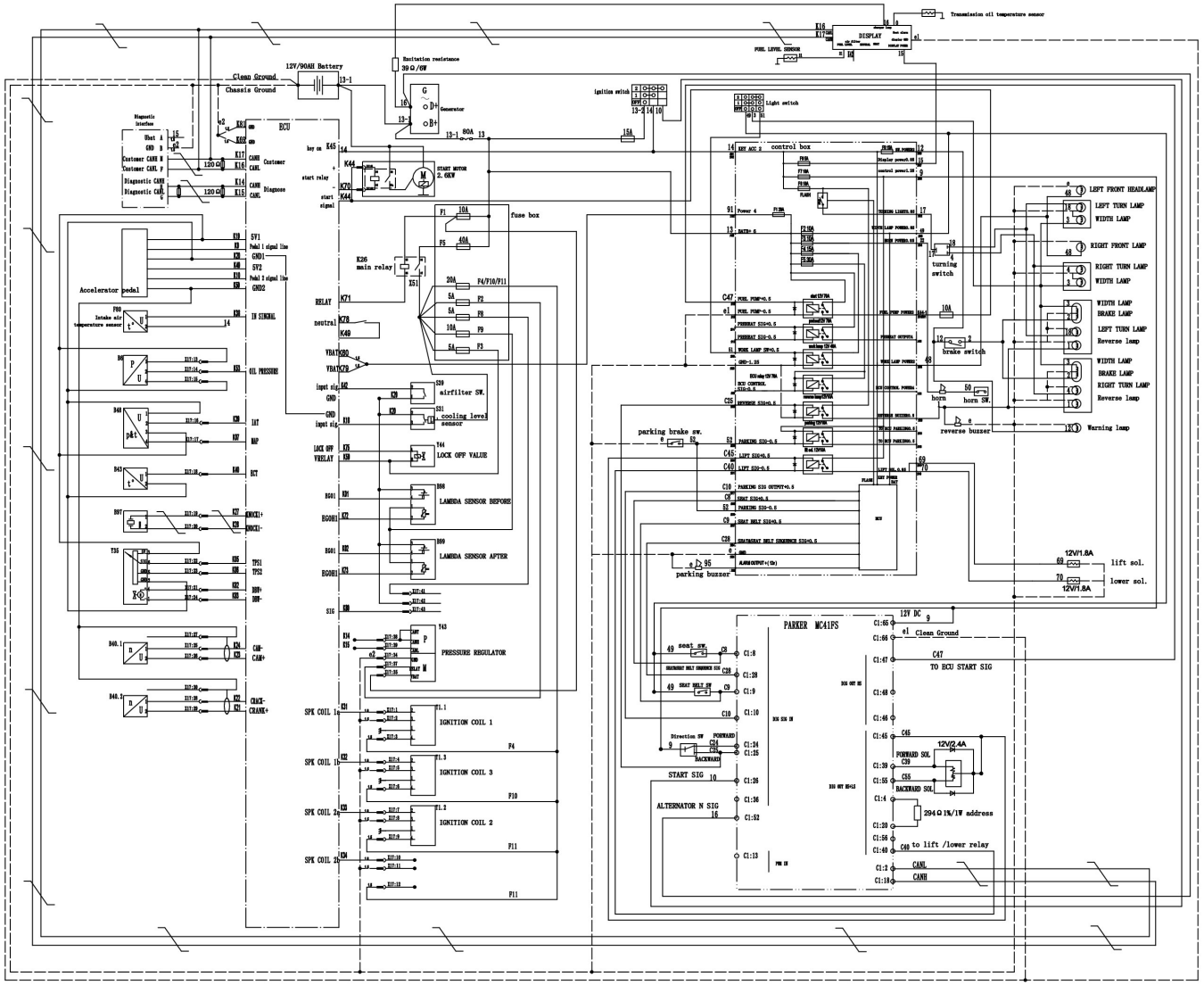

RC60040001

Hydraulic diagram

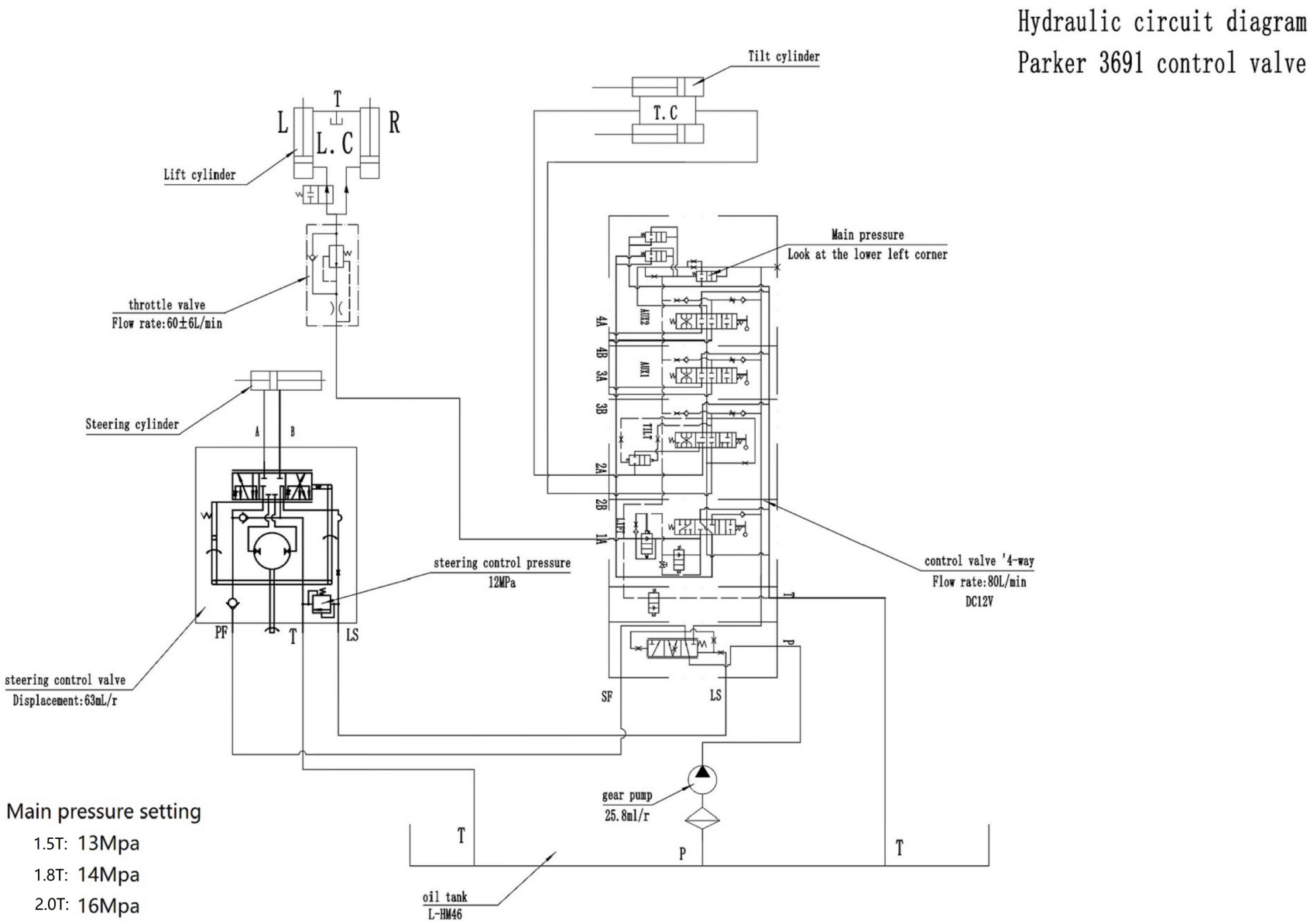

Main pressure setting

1.5T: 13Mpa

1.8T: 14Mpa

2.0T: 16Mpa

Brake diagrams

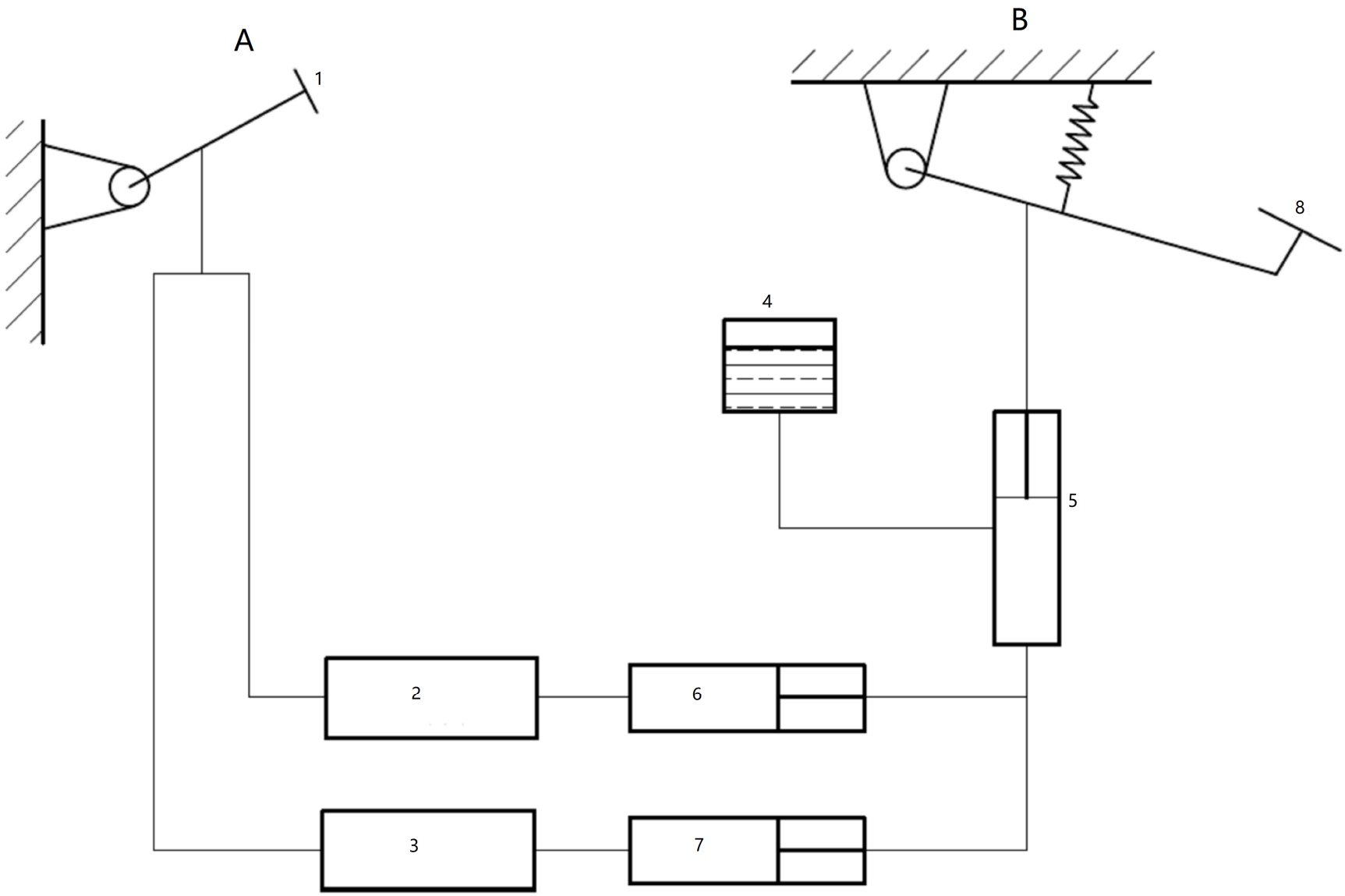

A	Parking brake	2	Wheel brake	5	Master cylinder	8	Driving brake pedal
B	Driving brake	3	Wheel brake	6	Wheel cylinder		
1	Parking brake lever/pedal	4	Brake fluid tank	7	Wheel cylinder		

STILL GmbH

60048011601 EN - 04/2023 - 08